Winstar Display Co., LTD
華凌光電股份有限公司
WEB: http://www.winstar.com.tw E-mail: winstar@winstar.com.tw

SPECIFICATION

CUSTOMER : _____

MODULE NO.: **WF35QTIBCDBT0#**

APPROVED BY: **(FOR CUSTOMER USE ONLY)**	**PCB VERSION:** **DATA:**

SALES BY	APPROVED BY	CHECKED BY	PREPARED BY
			葉虹蘭
ISSUED DATE: 2013/12/12			

Distributed by:
TEXIM EUROPE
www.texim-europe.com

Winstar Display Co., LTD
華凌光電股份有限公司

MODLE NO：

RECORDS OF REVISION

DOC. FIRST ISSUE

VERSION	DATE	REVISED PAGE NO.	**SUMMARY**
0	2013/09/27		First issue
A	2013/12/12		Correct VDD

Contents

1.Module Classification Information

2.Summary

3.General Specification

4.Absolute Maximum Ratings

5.Electrical Characteristics

6.DC Characteristics

7.Interface Timing Characteristics

8.Optical Characteristics

9.Interface

10.Block Diagram

11.Reliability

12.Touch Panel Information

13.Contour Drawing

14.Package Specification

15.Initial Code For Reference

1.Module Classification Information

W	F	35	Q	T	I	B	C	D	B	T	0	#
①	②	③	④	⑤	⑥	⑦	⑧	⑨	⑩	⑪	⑫	⑬

①	Brand：WINSTAR DISPLAY CORPORATION		
②	Display Type：F→TFT Type, J→Custom TFT		
③	Display Size：3.5” TFT		
④	Model serials no.		
⑤	Backlight Type：	F→CCFL, White S→LED, High Light White	T→LED, White
⑥	LCD Polarize Type/ Temperature range/ Gray Scale Inversion Direction	I→Transmissive, W. T, 6:00 L→Transmissive, W.T,12:00 Z→Transmissive, W.T, Wide Viewing Angle for O-FILM Y→Transmissive, W.T, Wide View	
⑦	A：TFT LCD B：TFT+FR+CONTROL BOARD C：TFT+FR+A/D BOARD D：TFT+FR+A/D BOARD+CONTROL BOARD E：TFT+FR+POWER BOARD F：TFT+CONTROL BOARD	G：TFT+FR H：TFT+D/V BOARD I：TFT+FR+D/V BOARD J：TFT+POWER BD	

⑧	Solution:						
	A: 128160	B:320234	C:320240	D:480234	E:480272	F: 640480	G: 800480
	H:1024600	I:320480	J:240320	K:800600	L:240400	M :1024768	P :1280800
⑨	D: Digital L：LVDS						
⑩	Interface： N：without control board A：8Bit B：16Bit						
⑪	TS： N：Without TS T：resistive touch panel C：capacitive touch panel						
⑫	Version						
⑬	Special Code	#:Fit in with ROHS directive regulations					

2.Summary

This technical specification applies to 3.45’ color TFT-LCD panel. The 3.45’ color TFT-LCD panel is designed for camcorder, digital camera application and other electronic products which require high quality flat panel displays. This module follows RoHS.

3.General Specifications

Item	Dimension	Unit
Dot Matrix	320 x RGBx240(TFT)	dots
Module dimension	93.5 x 66.44 x 8.5	mm
Active area	70.08 x 52.56	mm
Dot pitch	0.073 x 0.219	mm
LCD type	TFT, Negative, Transmissive	
View Direction	12 o’clock	
Gray Scale Inversion Direction	6 o’clock	
Backlight Type	LED, Normally White	
Controller IC	SSD1963	
Interface	Digital 8080 family MPU 8bit/16bit	

*Color tone slight changed by temperature and driving voltage.

4.Absolute Maximum Ratings

Item	Symbol	Min	Typ	Max	Unit
Operating Temperature	TOP	-20	—	+70	℃
Storage Temperature	TST	-30	—	+80	℃

Note: Device is subject to be damaged permanently if stresses beyond those absolute maximum ratings listed above

1. Temp. ≦60℃, 90% RH MAX. Temp.＞60℃, Absolute humidity shall be less than 90% RH at 60℃

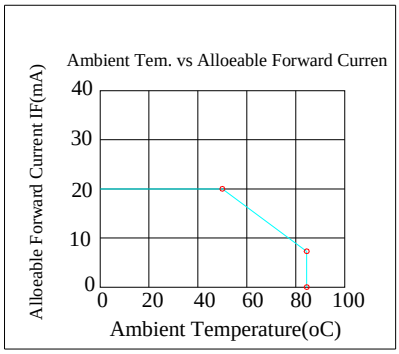

5.Electrical Characteristics

5.1. Operating conditions:

Item	Symbol	Condition	Min	Typ	Max	Unit	Remark
Supply Voltage For LCM	VDD	—	3.0	3.1	3.3	V	-
Supply Current For LCM	IDD	—	—	200	300	mA	Note1

Note 1 : This value is test for VCC=3.1V , Ta=25℃ only

5.2. Backlight driving conditions

Parameter	Symbol	Min.	Typ.	Max.	Unit	Remark
Operation Current For LED Driver	VLED=3.3V	150	-	225	mA	Note 1,2
Power Consumption	VLED=3.3V	495	-	742.5	mW	Note 1,2
Supply Voltage For LED Driver	VLED+	3.3	-	5	V	Note 1,2
LED Life Time		-	50,000	-	Hr	Note 2,3,4

Note 1 : Base on VLED= 3.3V for the back light driver IC specification
Note 2 : Ta = 25 ℃
Note 3 : Brightness to be decreased to 50% of the initial value
Note 4 : The single LED lamp case

6.DC CHARATERISTICS

Parameter	Symbol	Rating			Unit	Condition
		Min	Typ	Max		
Low level input voltage	V_{IL}	0	-	0.3 VDD	V	
Hight level input voltage	V_{IH}	0.7 VDD	-	VDD	V	

7.Interface timing

7.1. 8080 Mode

The 8080 mode MCU interface consist of CS#, D/C#, RD#, WR#, D[15:0] and TE signals. This interface use WR# to define a write cycle and RD# for read cycle. If the WR# goes low when the CS# signal is low, the data or command will be latched into the system at the rising edge of WR#. Similarly, the read cycle will start when RD# goes low and end at the rising edge of RD#.

7.2. 8080 Mode Write Cycle

Symbol	Parameter	Min	Typ	Max	Unit
fMCLK	System Clock Frequency	1	-	110	MHz
tMCLK	System Clock Period	1/ fMCLK	-	-	ns
tPWCSH	Control Pulse High Width Write Read	13 30	1.5* tMCLK 3.5* tMCLK	-	ns
tPWCSL	Control Pulse Low Width Write (next write cycle) Write (next read cycle) Read	13 80 80	1.5* tMCLK 9* tMCLK 9* tMCLK	-	ns
tAS	Address Setup Time	1	-	-	ns
tAH	Address Hold Time	2	-	-	ns
tDSW	Write Data Setup Time	4			ns
tDHW	Write Data Hold Time	1	-	-	ns
tPWLW	Write Low Time	12			ns
tDHR	Read Data Hold Time	1	-	-	ns
tACC	Access Time	32			ns
tPWLR	Read Low Time	36	-	-	ns
tR	Rise Time	-		0.5	ns
tF	Fall Time	-	-	0.5	ns
tCS	Chip select setup time	2		-	ns
tCSH	Chip select hold time to read signal	3	-	-	ns

7.3. Parallel 8080-series Interface Timing Diagram(Write Cycle)

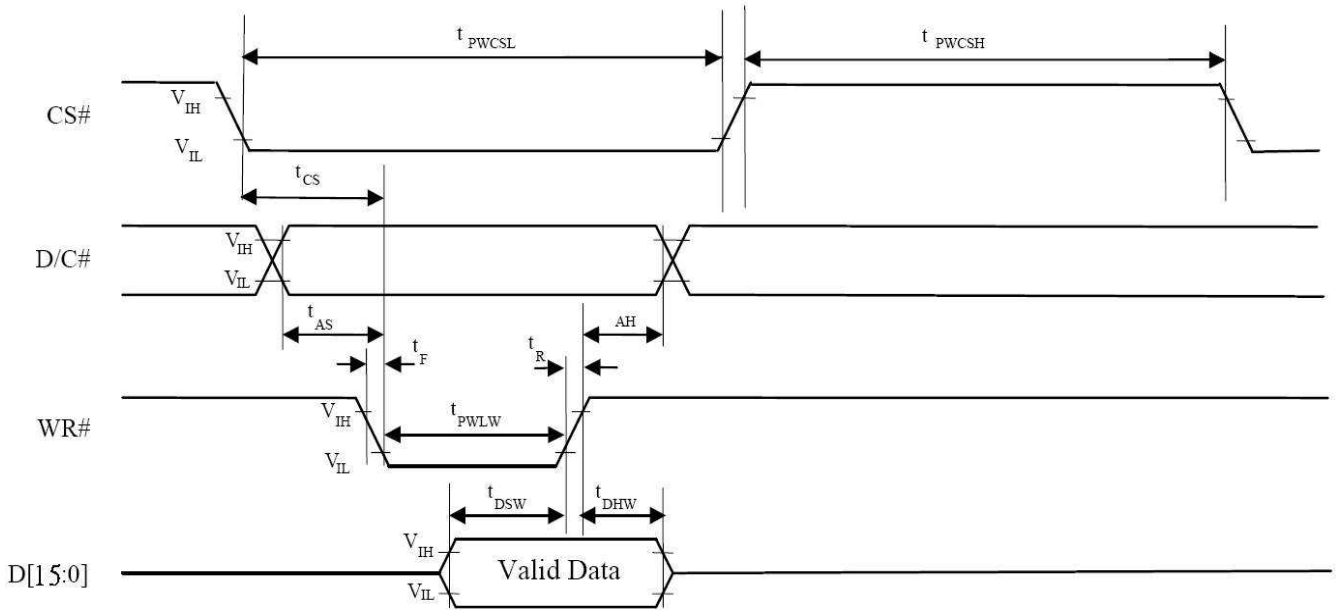

7.4. Parallel 8080-series Interface Timing Diagram(Read Cycle)

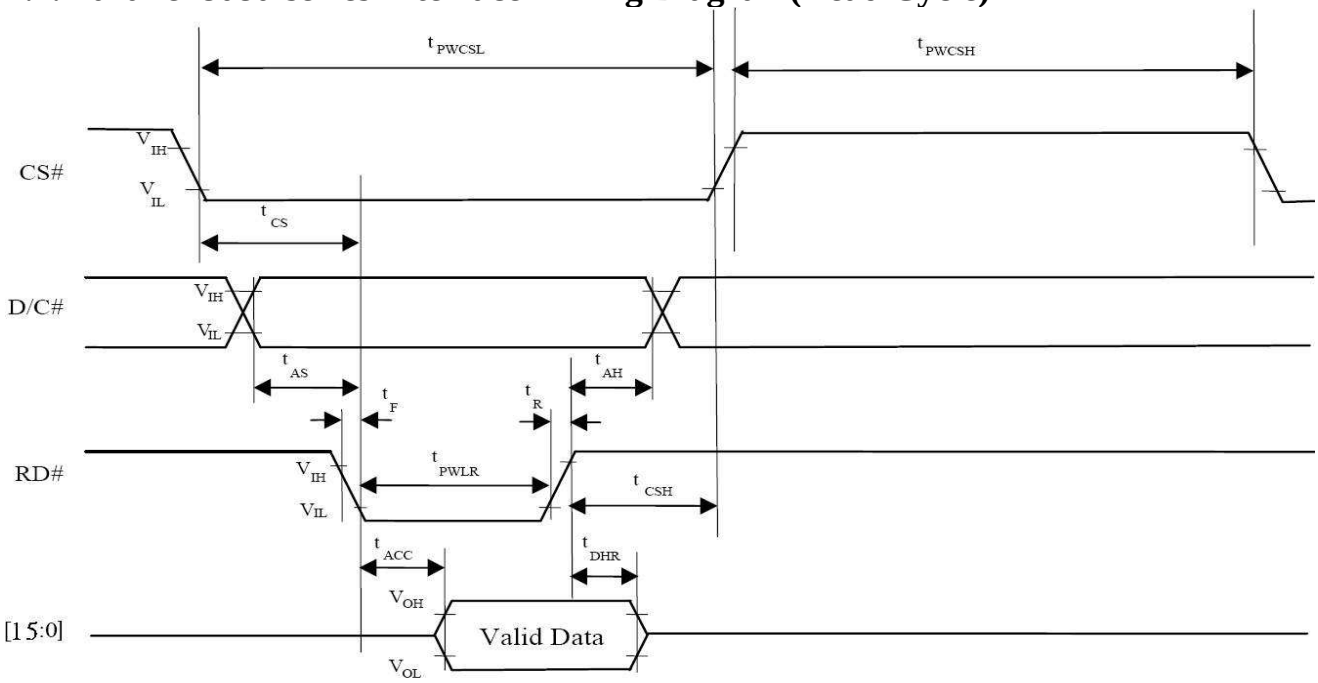

7.5. Pixel Data Format

Interface	Cycle	D[23]	D[22]	D[21]	D[20]	D[19]	D[18]	D[17]	D[16]	D[15]	D[14]	D[13]	D[12]	D[11]	D[10]	D[9]	D[8]	D[7]	D[6]	D[5]	D[4]	D[3]	D[2]	D[1]	D[0]
24 bits	1st	R7	R6	R5	R4	R3	R2	R1	R0	G7	G6	G5	G4	G3	G2	G1	G0	B7	B6	B5	B4	B3	B2	B1	B0
18 bits	1st							R5	R4	R3	R2	R1	R0	G5	G4	G3	G2	G1	G0	B5	B4	B3	B2	B1	B0
16 bits (565 format)	1st									R5	R4	R3	R2	R1	G5	G4	G3	G2	G1	G0	B5	B4	B3	B2	B1
16 bits	1st									R7	R6	R5	R4	R3	R2	R1	R0	G7	G6	G5	G4	G3	G2	G1	G0
	2nd									B7	B6	B5	B4	B3	B2	B1	B0	R7	R6	R5	R4	R3	R2	R1	R0
	3rd									G7	G6	G5	G4	G3	G2	G1	G0	B7	B6	B5	B4	B3	B2	B1	B0
12 bits	1st													R7	R6	R5	R4	R3	R2	R1	R0	G7	G6	G5	G4
	2nd													G3	G2	G1	G0	B7	B6	B5	B4	B3	B2	B1	B0
9 bits	1st																R5	R4	R3	R2	R1	R0	G5	G4	G3
	2nd																G2	G1	G0	B5	B4	B3	B2	B1	B0
8 bits	1st																	R7	R6	R5	R4	R3	R2	R1	R0
	2nd																	G7	G6	G5	G4	G3	G2	G1	G0
	3rd																	B7	B6	B5	B4	B3	B2	B1	B0

8.Optical Characteristics

Item		Symbol	Condition.	Min	Typ.	Max.	Unit	Remark
Response time		Tr	θ=0°、Φ=0°	-	10		ms	Note 3,5
		Tf		-	15		ms	
Contrast ratio		CR	At optimized viewing angle	300	350	-	-	Note 4,5
Color Chromaticity	White	Wx	θ=0°、Φ=0	0.25	0.30	0.35	-	Note 2,6,7
		Wy		0.27	0.32	0.37	-	
Viewing angle	Hor.	ΘR	CR≧10	50	60	-	Deg.	Note 1
		ΘL		50	60	-		
	Ver.	ΦT		40	50	-		
		ΦB		45	55	-		
Brightness		-	-	250	300	-	cd/m^2	Center of display

Ta=25±2℃, I_L=20mA

Note 1: Definition of viewing angle range

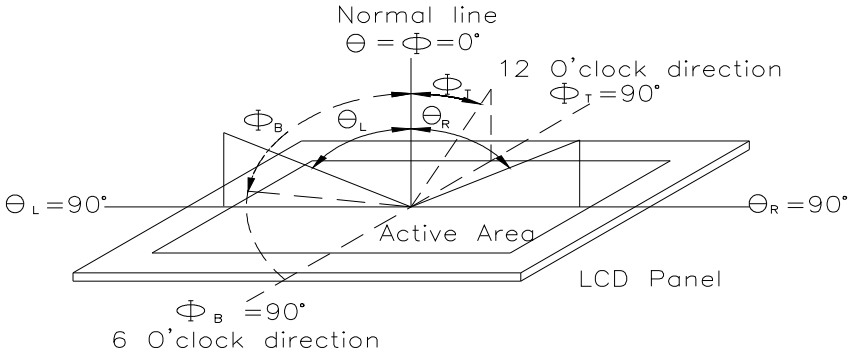

Fig. 8.1. Definition of viewing angle

Note 2: Test equipment setup:

After stabilizing and leaving the panel alone at a driven temperature for 10 minutes, the measurement should be executed. Measurement should be executed in a stable, windless, and dark room. Optical specifications are measured by Topcon BM-7 or BM-5 luminance meter 1.0° field of view at a distance of 50cm and normal direction.

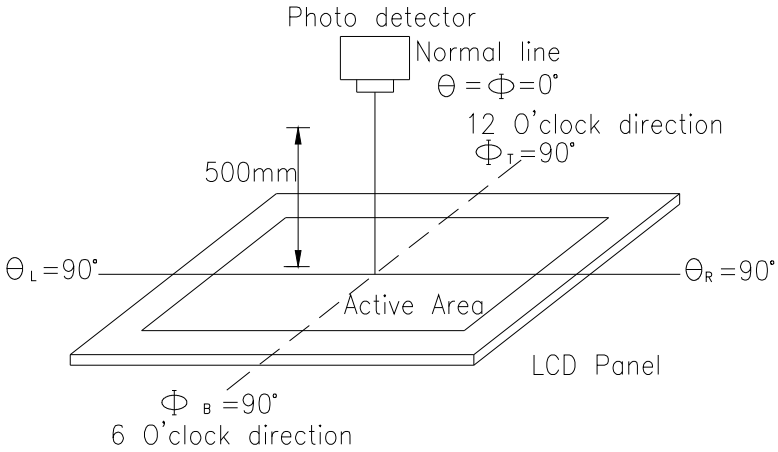

Fig. 8.2. Optical measurement system setup

Note 3: Definition of Response time:
The response time is defined as the LCD optical switching time interval between “White” state and “Black” state. Rise time, Tr, is the time between photo detector output intensity changed from 90%to 10%. And fall time, Tf, is the time between photo detector output intensity changed from 10%to 90%

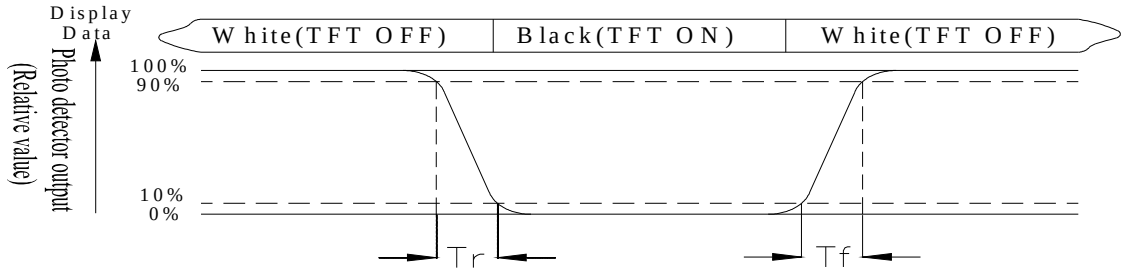

Note 4: Definition of contrast ratio:
The contrast ratio is defined as the following expression.

$$\text{Contrast ratio (CR)} = \frac{\text{Luminance measured when LCD on the "White" state}}{\text{Luminance measured when LCD on the "Black" state}}$$

Note 5: White Vi = Vi50 ± 1.5V
Black Vi = Vi50 ± 2.0V
“±” means that the analog input signal swings in phase with VCOM signal.
“±” means that the analog input signal swings out of phase with VCOM signal.
The 100% transmission is defined as the transmission of LCD panel when all the input terminals of module are electrically opened.
Note 6: Definition of color chromaticity (CIE 1931)
Color coordinates measured at the center point of LCD
Note 7: Measured at the center area of the panel when all the input terminals of LCD panel are electrically opened.

9.Interface

9.1. LCM PIN Definition

Pin	Symbol	Function	Remark
1	GND	System ground pin of the IC. Connect to system ground.	
2	VDD	Power Supply : +3.3V	
3	BL_E	Backlight control signal , H: On \ L: Off	
4	D/C	Data/Command select	
5	WR	Write strobe signal	
6	RD	Read strobe signal	
7	DB0	Data bus	
8	DB1	Data bus	
9	DB2	Data bus	
10	DB3	Data bus	
11	DB4	Data bus	
12	DB5	Data bus	
13	DB6	Data bus	
14	DB7	Data bus	
15	DB8	Data bus (When select 8bits Mode, this pin is NC)	Note1
16	DB9	Data bus (When select 8bits Mode, this pin is NC)	Note1
17	DB10	Data bus (When select 8bits Mode, this pin is NC)	Note1
18	DB11	Data bus (When select 8bits Mode, this pin is NC)	Note1
19	DB12	Data bus (When select 8bits Mode, this pin is NC)	Note1
20	DB13	Data bus (When select 8bits Mode, this pin is NC)	Note1
21	DB14	Data bus (When select 8bits Mode, this pin is NC)	Note1
22	DB15	Data bus (When select 8bits Mode, this pin is NC)	Note1
23	NC	No connect	
24	NC	No connect	
25	CS	Chip select	
26	RST	Hardware reset	
27	NC	No connect	
28	NC	No connect	
29	XL	Left electrode	
30	YU	Top electrode	
31	XR	Right electrode	
32	YD	Down electrode	
33	VLED-	VLED- for B/L LED inverter (GND)	
34	VLED-	VLED- for B/L LED inverter (GND)	
35	VLED+	VLED+ for B/L LED inverter (+3.3V)	
36	VLED+	VLED+ for B/L LED inverter (+3.3V)	

Note1: When select 8bit mode, DB0~DB7 be used, DB8~DB15 no connect
When select 16bit mode, DB0~DB15 be used

10.Block Diagram

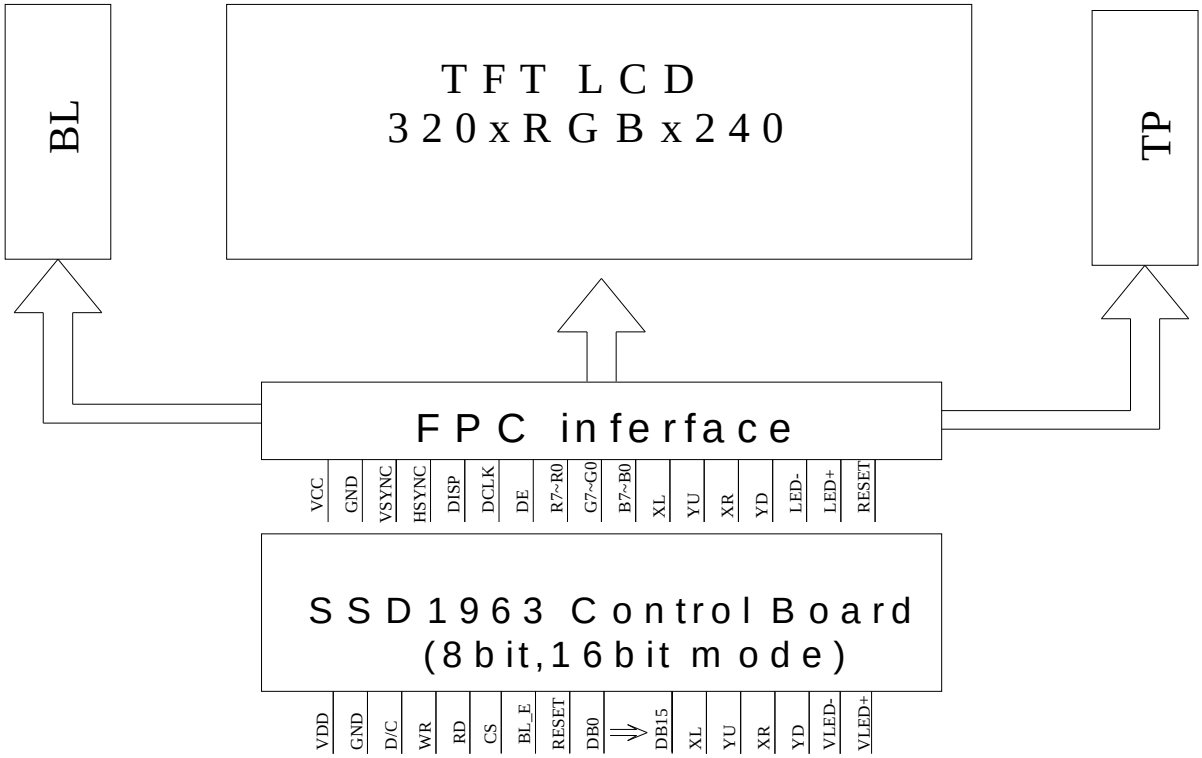

11.Reliability

Content of Reliability Test (Wide temperature, -20℃~70℃)

Environmental Test			
Test Item	**Content of Test**	**Test Condition**	**Note**
High Temperature storage	Endurance test applying the high storage temperature for a long time.	80℃ 200hrs	2
Low Temperature storage	Endurance test applying the high storage temperature for a long time.	-30℃ 200hrs	1,2
High Temperature Operation	Endurance test applying the electric stress (Voltage & Current) and the thermal stress to the element for a long time.	70℃ 200hrs	——
Low Temperature Operation	Endurance test applying the electric stress under low temperature for a long time.	-20℃ 200hrs	1
High Temperature/ Humidity Operation	The module should be allowed to stand at 60 ℃,90%RH max For 96hrs under no-load condition excluding the polarizer, Then taking it out and drying it at normal temperature.	60℃,90%RH 96hrs	1,2
Thermal shock resistance	The sample should be allowed stand the following 10 cycles of operation -20℃ 25℃ 70℃ 30min 5min 30min 1 cycle	-20℃/70℃ 10 cycles	——
Vibration test	Endurance test applying the vibration during transportation and using.	Total fixed amplitude : 15mm Vibration Frequency : 10~55Hz One cycle 60 seconds to 3 directions of X,Y,Z for Each 15 minutes	**3**
Static electricity test	Endurance test applying the electric stress to the terminal.	VS=800V, RS=1.5kΩ CS=100pF 1 time	——

Note1: No dew condensation to be observed.

Note2: The function test shall be conducted after 4 hours storage at the normal Temperature and humidity after remove from the test chamber.

Note3: Vibration test will be conducted to the product itself without putting it in a container.

12.Touch Panel Information

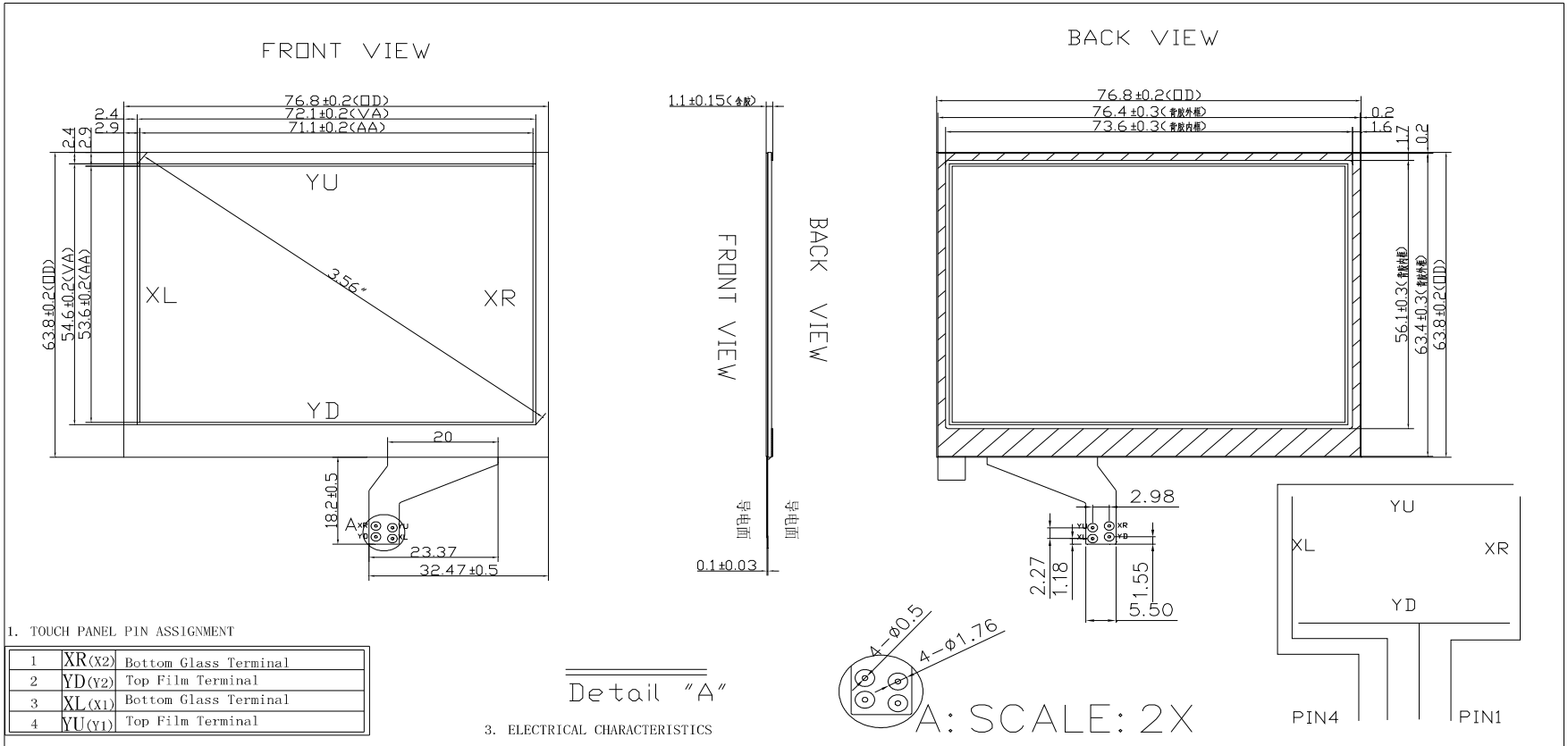

1. TOUCH PANEL PIN ASSIGNMENT

1	XR(X2)	Bottom Glass Terminal
2	YD(Y2)	Top Film Terminal
3	XL(X1)	Bottom Glass Terminal
4	YU(Y1)	Top Film Terminal

2. MATERIAL CHARACTERISTICS

Property	Requirement
Surface treatment	Anti Glare
Approach made	ITO Film+ITO Glass
Glass thickness	0.70
Light transmission	≥78%
Operation Temperature	-20℃ ~ +70℃
Storage Temperature	-30℃ ~ +80℃

3. ELECTRICAL CHARACTERISTICS

Property	Requirement
Type	Analog resistive 4 wire
Linearity	Max1.5%
X(1.3) resistance	200 ~ 1100Ω
Y(2.4) resistance	200 ~ 1100Ω
Insulation resistance	10MΩ (DC 25V)

4. A.A.:Active Area
5. V.A.:View Area
6. Tolerance no specified: ±0.2mm

1

2.1.

13.Contour Drawing

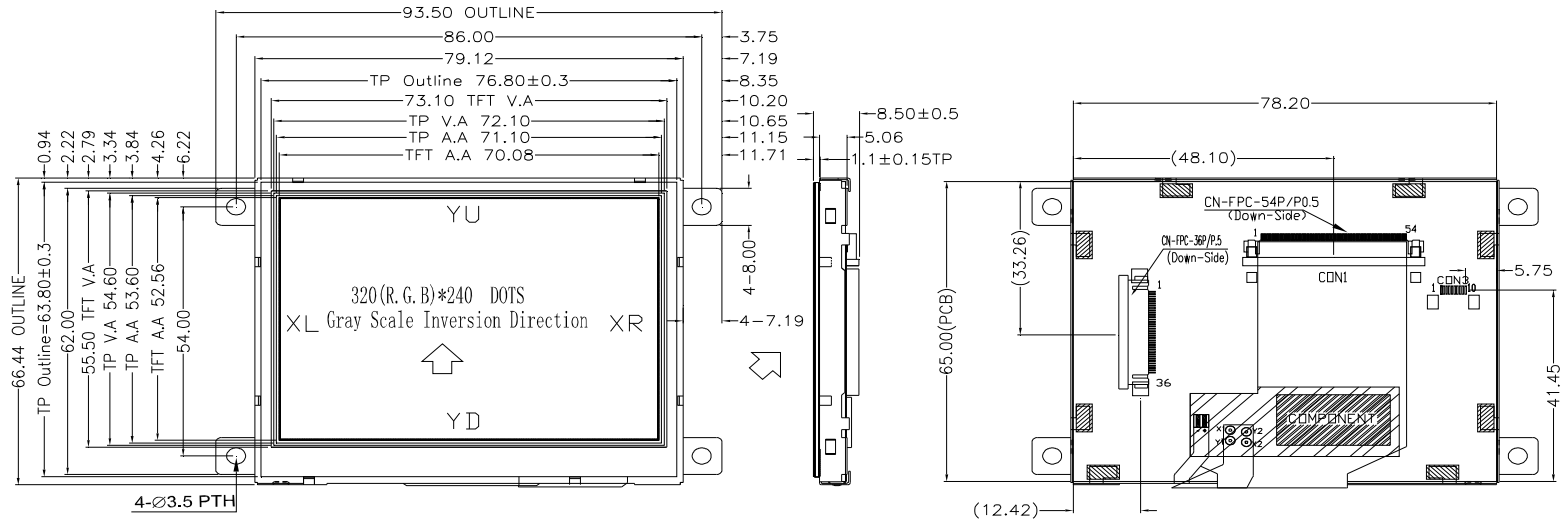

Pin	Symbol
1	GND
2	VDD
3	BLE
4	D/C
5	WR
6	RD
7	DB0
8	DB1
9	DB2
10	DB3
11	DB4
12	DB5
13	DB6
14	DB7
15	DB8
16	DB9
17	DB10
18	DB11
19	DB12
20	DB13
21	DB14
22	DB15
23	NC
24	NC
25	CS
26	RST
27	NC
28	NC
29	XL
30	YU
31	XR
32	YD
33	VLED-
34	VLED-
35	VLED+
36	VLED+

The non-specified tolerance of dimension is ±0.3mm.

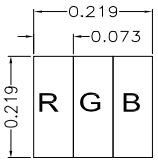

SCALE 1:100

14.PACKAGE SPECIFICATION

LCM Model	WF35QTIBCDBT0#
Drawing NO.	

LCM 包裝規格書

LCM Packaging Specifications

Approve	Check	Contact
DATE	初版	版次 Ver
13'9/27	13'9/27	0

1.包裝材料規格表（Packaging Material）:(per carton)

NO.	Item	Model	Dimensions	Quantity
1	成品（LCM）	WF35QTIBCDBT0#	93.5 x 66.44x 8.5	TBD
2	TRAY 盤 (2)	PKCA1XXXXXXXXXXX0281	315 x 265 x 13.5	TBD
3	BP01 內盒(3)Product Box	PK3R1XXXXXXXXXXX0001	332 x 280 x 100	TBD
4	泡棉(4)Foam	-----	283 x 230 x 8	TBD
5	外紙箱(5)Carton	PK4Q1XXXXXXXXXXX0000	565 x 340 x 320	TBD
6				
7				
8				
9				

2.單箱數量規格表(Packaging Specifications and Quantity) :

(1)LCM quantity per box : no per tray TBD x no of tray TBD = TBD

(2)Total LCM quantity in carton : quantity per box TBD x no of boxes TBD = TBD

特 記 事 項 (REMARK)

1. Label Specifications :

MOOEL:

LOT NO :

QUANTITY:

CHECK:

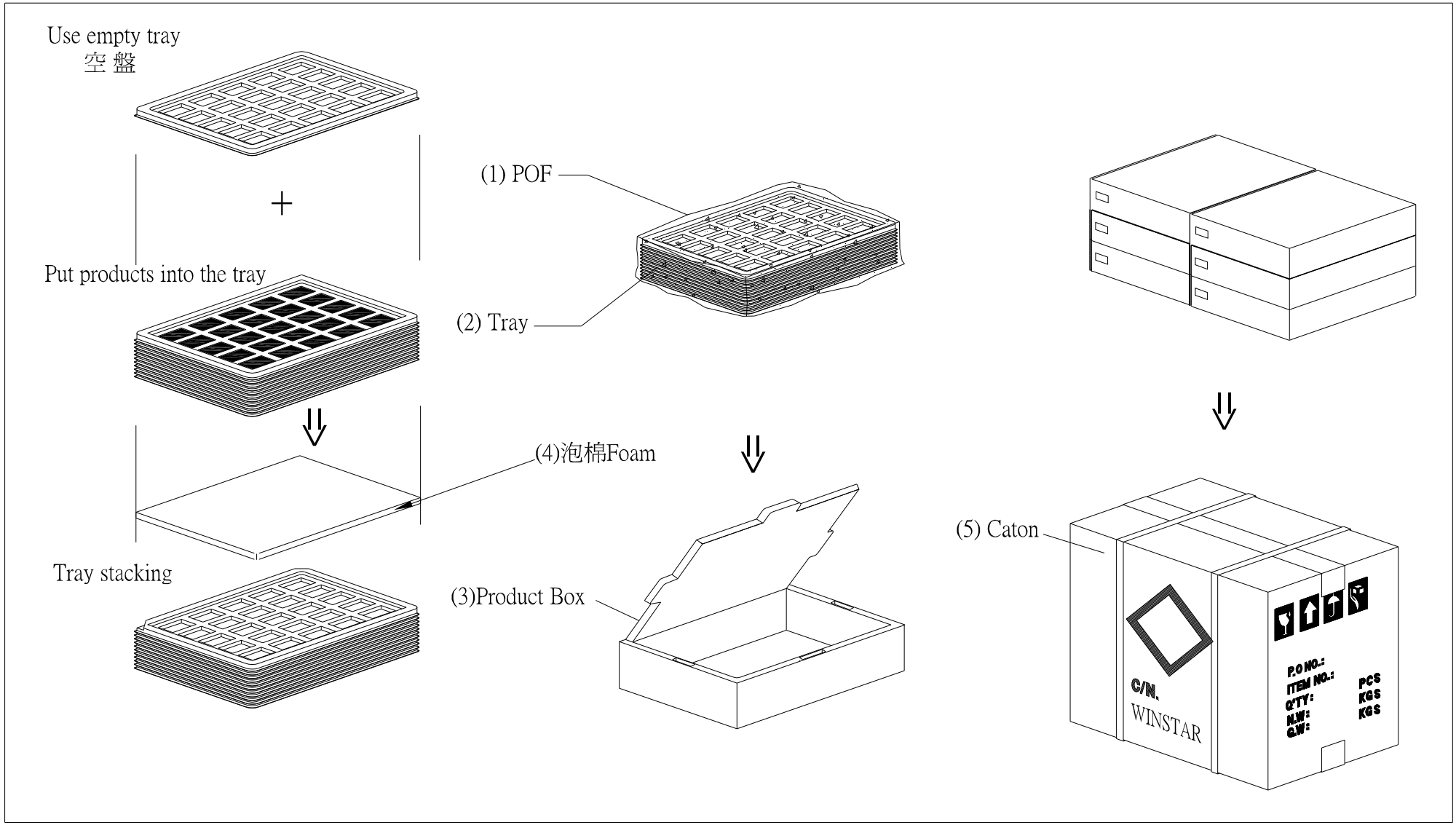
Use empty tray
空 盤
Put products into the tray
Tray stacking
(1) POF
(2) Tray
(4)泡棉Foam
(3)Product Box
(5) Caton
C/N.
WINSTAR
P.O NO.:
ITEM NO.:
Q'TY: PCS
N.W: KGS
G.W: KGS

15.Initial Code For Reference

```
void Initial_code()
{
        Unsigned int SOURCE,GATE;
        SOURCE=320;
        GATE=240;

        Reset = 1;
        Delay_ms(10);
        Reset = 0;
        Delay_ms(50);
        Reset = 1;
        Delay_ms(100);

        Write_Command(0x01);
        Delay_ms(10);
        Write_Command(0xe0);      //START PLL
        Write_Parameter(0x01);
        Delay_ms(50);
        Write_Command(0xe0);      //LOCK PLL
        Write_Parameter(0x03);
        Delay_ms(5);
        Write_Command(0xb0);
        Write_Parameter(0x20);
        Write_Parameter(0x80);
        Write_Parameter((SOURCE-1)>>8);
        Write_Parameter(SOURCE-1);
        Write_Parameter((GATE-1)>>8);
        Write_Parameter(GATE-1);
        Write_Parameter(0x00);
        Write_Command(0xf0);
        Write_Parameter(0x03); //0x03 is 16bit(565 format);0x00 is for 8-bit,pixel data format
        //Set the MN of PLL
        Write_Command(0xe2);
        Write_Parameter(0x1d);
        Write_Parameter(0x02);
        Write_Parameter(0x54);
        Write_Command(0xe6);
        Write_Parameter(0x01);
        Write_Parameter(0xdd);
        Write_Parameter(0xde);
        //Set front porch and back porch
        Write_Command(0xb4);
        Write_Parameter(0x01);
        Write_Parameter(0x98);
        Write_Parameter(0x00);
        Write_Parameter(0x44);
        Write_Parameter(0x14);
        Write_Parameter(0x00);
```

```
        Write_Parameter(0x00);
        Write_Parameter(0x00);
        Write_Command(0xb6);
        Write_Parameter(0x01);
        Write_Parameter(0x06);
        Write_Parameter(0x00);
        Write_Parameter(0x12);
        Write_Parameter(0x04);
        Write_Parameter(0x00);
        Write_Parameter(0x00);
        Write_Command(0x2a);
        Write_Parameter(0x00);
        Write_Parameter(0x00);
        Write_Parameter((SOURCE-1)>>8);     /
        Write_Parameter(SOURCE-1);
        Write_Command(0x2b);
        Write_Parameter(0x00);
        Write_Parameter(0x00);
        Write_Parameter((GATE-1)>>8);
        Write_Parameter(GATE-1);
        Write_Command(0x29);
        Write_Command(0x2c);
}
```

winstar **LCM Sample Estimate Feedback Sheet**

Module Number：_____ **Page: 1**

1、Panel Specification：

1. Panel Type： □ Pass □ NG ,_____
2. View Direction： □ Pass □ NG ,_____
3. Numbers of Dots： □ Pass □ NG ,_____
4. View Area： □ Pass □ NG ,_____
5. Active Area： □ Pass □ NG ,_____
6. Operating Temperature： □ Pass □ NG ,_____
7. Storage Temperature： □ Pass □ NG ,_____
8. Others：_____

2、Mechanical Specification：

1. PCB Size： □ Pass □ NG ,_____
2. Frame Size： □ Pass □ NG ,_____
3. Material of Frame： □ Pass □ NG ,_____
4. Connector Position： □ Pass □ NG ,_____
5. Fix Hole Position： □ Pass □ NG ,_____
6. Backlight Position： □ Pass □ NG ,_____
7. Thickness of PCB： □ Pass □ NG ,_____
8. Height of Frame to PCB： □ Pass □ NG ,_____
9. Height of Module： □ Pass □ NG ,_____
10. Others： □ Pass □ NG ,_____

3、Relative Hole Size：

1. Pitch of Connector： □ Pass □ NG ,_____
2. Hole size of Connector： □ Pass □ NG ,_____
3. Mounting Hole size： □ Pass □ NG ,_____
4. Mounting Hole Type： □ Pass □ NG ,_____
5. Others： □ Pass □ NG ,_____

4、Backlight Specification：

1. B/L Type： □ Pass □ NG ,_____
2. B/L Color： □ Pass □ NG ,_____
3. B/L Driving Voltage (Reference for LED Type)： □ Pass □ NG ,_____
4. B/L Driving Current： □ Pass □ NG ,_____
5. Brightness of B/L： □ Pass □ NG ,_____
6. B/L Solder Method： □ Pass □ NG ,_____
7. Others： □ Pass □ NG ,_____

>> **Go to page 2** <<

Winstar
Module Number：_____ **Page: 2**

5、Electronic Characteristics of Module：

1. Input Voltage： □ Pass □ NG ,_____
2. Supply Current： □ Pass □ NG ,_____
3. Driving Voltage for LCD： □ Pass □ NG ,_____
4. Contrast for LCD： □ Pass □ NG ,_____
5. B/L Driving Method： □ Pass □ NG ,_____
6. Negative Voltage Output： □ Pass □ NG ,_____
7. Interface Function： □ Pass □ NG ,_____
8. LCD Uniformity： □ Pass □ NG ,_____
9. ESD test： □ Pass □ NG ,_____
10. Others： □ Pass □ NG ,_____

6、Summary：

Sales signature：_____
Customer Signature：_____
Date：_____/_____/_____