# E104-BT5010A User Manual

## nRF52810 BLE5.0 Low Power BLE to Serial Module

Chengdu Ebyte Electronic Technology Co.,Ltd.

# Contents

**1. OVERVIEW ..... 4**
1.1 INTRODUCTION ..... 4
1.2 FEATURES ..... 4
1.3 APPLICATION ..... 4
**2. PARAMETER ..... 5**
2.1 LIMIT PARAMETER ..... 5
2.2 OPERATING PARAMETER ..... 5
**3. DIMENSION AND PIN DEFINITION ..... 7**
**4. RECOMMENDED CONNECTION DIAGRAM ..... 9**
**5. FUNCTION ..... 9**
5.1 ROLES ..... 9
5.1.1 Master ..... 9
5.1.2 Slave ..... 10
5.1.3 Observer ..... 10
5.2 POWER MODE ..... 11
5.2.1 Low power mode ..... 11
5.2.2 Wake up mode ..... 11
5.3 ADVERTISING ..... 11
5.3.1 Normal advertising info. ..... 11
5.3.2 iBeacon advertising info. ..... 12
5.4 CONFIGURATION ..... 12
5.5 DATA INDICATION ..... 12
5.6 UUID SPECIFICATION ..... 13
5.7 STATUS AND EVENT PRINTING ..... 13
**6. AT COMMAND ..... 14**
6.1 COMMAND INSTRUCTION ..... 14
6.2 ERROR CODE ..... 14
6.3 STATUS PRINTING ..... 15
6.4 COMMAND LIST ..... 15
6.4.1 AT test command ..... 15
6.4.2 AT+RESET Reset command ..... 15
6.4.3 AT+RESTORE restore factory setting ..... 15
6.4.4 AT+BAUD baud rate ..... 15
6.4.5 AT+PARI parity ..... 16
6.4.6 AT+ROLE Bluetooth role ..... 16
6.4.7 AT+DEVMANUF modify manufacture name ..... 17
6.4.8 AT+DEVSERIAL modify device serial ..... 17
6.4.9 AT+DEVMODEL modify device model ..... 17
6.4.10 AT+DEVHWER modify hardware version ..... 18
6.4.11 AT+DEVSWVER modify software version ..... 18
6.4.12 AT+DEVID modify device ID ..... 18
6.4.13 AT+ADV enable advertising ..... 18



Copyright ©2012–2019，Chengdu Ebyte Electronic Technology Co., Ltd

6.4.14 AT+ADVDAT advertising data ..... 19
6.4.15 AT+ADVINTV advertising gap ..... 19
6.4.16 AT+IBCNUUID iBeacon UUID command ..... 19
6.4.17 AT+MAJOR iBeacon Major Command ..... 20
6.4.18 AT+MINOR iBeacon Minor command ..... 20
6.4.19 AT+IPWR modify ibeacn tx_power ..... 20
6.4.20 AT+NAME advertise device name ..... 21
6.4.21 AT+CONPARAMS connection gap configuration ..... 21
6.4.22 AT+DISCON disconnect command ..... 22
6.4.23 AT+DATDLY Data output delay ..... 22
6.4.24 AT+MAC local MAC address ..... 22
6.4.25 AT+PEERMAC connect to device MAC ..... 23
6.4.26 AT+BOND enable bonding ..... 23
6.4.27 AT+BONDMAC add more bond MAC address ..... 23
6.4.28 AT+BONDDEL delete bond MAC address ..... 23
6.4.29 AT+SCAN advertising scan ..... 24
6.4.30 AT+SCANINTV scan interval ..... 24
6.4.31 AT+SCANWND scan window ..... 24
6.4.32 AT+AUTOCONN connect automatically ..... 25
6.4.33 AT+CONN specify connection ..... 25
6.4.34 AT+UUIDSVR128 set 128-bit UUID ..... 25
6.4.35 AT+UUIDSVR Bluetooth service UUID ..... 26
6.4.36 AT+UUIDCHARA1 SLAVE CHANNEL characteristic UUID ..... 26
6.4.37 AT+UUIDCHARA2 MAST CHANNEL characteristic UUID command ..... 26
6.4.38 AT+VER query software version No. ..... 26
6.4.39 AT+AUTH set authentication password over air ..... 27
6.4.40 AT+UPAUTH change authentication password over air ..... 27
6.4.41 AT+PWR transmitting power ..... 27
6.4.42 AT+ONSLEEP sleep once power on ..... 28
6.4.43 AT+DISCSLEEP disconnect and get into sleep ..... 28
6.4.44 AT+SLEEP get into sleep mode immediately ..... 28
6.4.45 AT+LOGMSG operating condition output ..... 29
**7. QUICK START ..... 30**
7.1 GUIDANCE FOR CONFIGURATION MODE ..... 30
7.1.1 UART configuration ..... 30
7.1.2 Configuration over air ..... 30
7.2 DATA TRANSMISSION ..... 32
7.2.1 Data transparent transmission ..... 32
**7. HARDWARE DESIGN ..... 33**
**8. FAQ ..... 35**
8.1 COMMUNICATION RANGE IS TOO SHORT ..... 35
8.2 MODULE IS EASY TO DAMAGE ..... 35
8.3 BIT ERROR RATE IS TOO HIGH ..... 35
**9. PRODUCTION GUIDANCE ..... 36**



Copyright ©2012–2019，Chengdu Ebyte Electronic Technology Co., Ltd

9.1 REFLOW SOLDERING TEMPERATURE ..... 36
9.2 REFLOW SOLDERING CURVE ..... 36
**10 RELATED PRODUCT ..... 37**
**11 PACKAGE FOR BULK ORDER ..... 38**
**REVERSION HISTORY ..... 39**
**ABOUT US ..... 39**



Copyright ©2012–2019，Chengdu Ebyte Electronic Technology Co., Ltd

# 1. Overview

## 1.1 Introduction

Small in size and low in power consumption, E104-BT5010A is a serial-to-BLE module based on BLE 5.0 working at 2.4Ghz. It works as both Bluetooth master and slave.

Based on nRF52810 from Nordic, the E104-BT5010A module is developed by Chengdu Ebyte. AT commands are available for parameter setting, thus operation is simple and fast. There are Bluetooth master, slave and observer modes. It functionally supports low-power broadcast, data transparent transmission, and air configuration. It is widely used in smart wear, home automation, home security, personal health care, smart home appliances, accessories and remote control, automotive, lighting, industrial Internet, intelligent data acquisition, intelligent control, etc. The maximum continuous transmission baud rate is 921600bps.

## 1.2 Features

- BLE 5.0；
- Bluetooth packet length is adjustable；
- Working mode: configuration and transparent transmission mode；
- Automatic advertising and connection after power on;
- Switch between IBeacon and common broadcast available；
- Serial wake up available；
- MAC bonding connection；
- Serial transparent transmission；
- Various serial modes and baud rates;
- Self-defined 16-bit UUID and 128-bit UUID;
- PCB antenna；
- Bluetooth parameter configuration over air is available;
- Distance : 55m（@4dBm、2Mbps）;
- Ultra-low power sleep, synchronous broadcast;
- MAC address binding available. The maximum binding data is 8 devices;
- There are two connection modes: manual connection, automatic connection;
- Dynamic modification of transmit power is available. The maximum power is 4dBm;
- Sniffing function available;
- MTU maximum is 247 bytes；
- Air data rate 2M,1M available;

## 1.3 Application

- Smart home and industrial sensors;



Copyright ©2012–2019，Chengdu Ebyte Electronic Technology Co., Ltd

- Security system, positioning system;
- Building automation solutions;
- Wireless remote control, UAV;
- Wireless game remote control;
- Healthcare sensor;
- Wireless voice, wireless headphones;
- RFID;
- Automotive applications.

# 2. Parameter

## 2.1 Limit parameter

| Main parameter | Performance | | Note |
|---|---|---|---|
| | Min | Max | |
| Voltage supply [V] | 0 | 3.6 | Voltage over 3.6V will cause permanent damage to module |
| Blocking power [dBm] | - | 10 | Chances of burn is slim when modules are used in short distance |
| Operating temperature [℃] | -40 | +85 | - |

## 2.2 Operating parameter

| Main parameter | | Performance | | | Remarks |
|---|---|---|---|---|---|
| | | Min | Typ | Max | |
| Voltage supply [V] | | 1.7 | 3.3 | 3.6 | ≥3.3 V ensures output power |
| Communication level [V] | | | 3.3 | | For 5V TTL, it may be at risk of burning down |
| Operating temperature [℃] | | -40 | - | +85 | |
| Frequency [MHz] | | 2402 | - | 2480 | ISM band |
| Stand-by current（μA） | | - | 8 | - | - |
| Transmitting power [dBm] | | - | 3.8 | 4 | - |
| Receiving sensitivity [dBm] | | - | -96 | - | Bluetooth®lowenergymode |
| Random I/O | VIL/VIH | GND/0.7*VCC | - | 0.3*VCC/VCC | - |
| | VOL/VOH | GND/VCC-0.4 | - | GND+0.4/VCC | - |
| Sleep advertising current(default) | | - | 173 | - | unit：uA, default advertising gap is 1s, default 0dBm |
| Wake-up advertising current(default) | | - | 8.70 | - | unit：mA, default advertising gap is 1s, default |



Copyright ©2012–2019，Chengdu Ebyte Electronic Technology Co., Ltd

| | | | | |
|---|---|---|---|---|
| | | | | 0dBm |
| Wake-up no advertising current(default) | - | 8.68 | - | unit：mA, default connection gap is 500ms, default 0dBm |
| wake-up connection current(default) | - | 8.78 | - | unit：mA，default 0dBm |

| Main parameter | Description | Remarks |
|---|---|---|
| Distance | 60m | Test condition：clear and open area, antenna gain: 5dBi，@4dBm, antenna height: 2m |
| BLE protocol | BLE 5.0 | - |
| Communication interface | UART | - |
| Package | SMD | - |
| Connector | 1.27 mm | - |
| Size | 11.5*16mm | - |
| Antenna | Ceramic antenna | 50Ω Impedance |
| Weight | 0.8±0.1g | |



Copyright ©2012–2019，Chengdu Ebyte Electronic Technology Co., Ltd

# 3. Dimension and Pin Definition

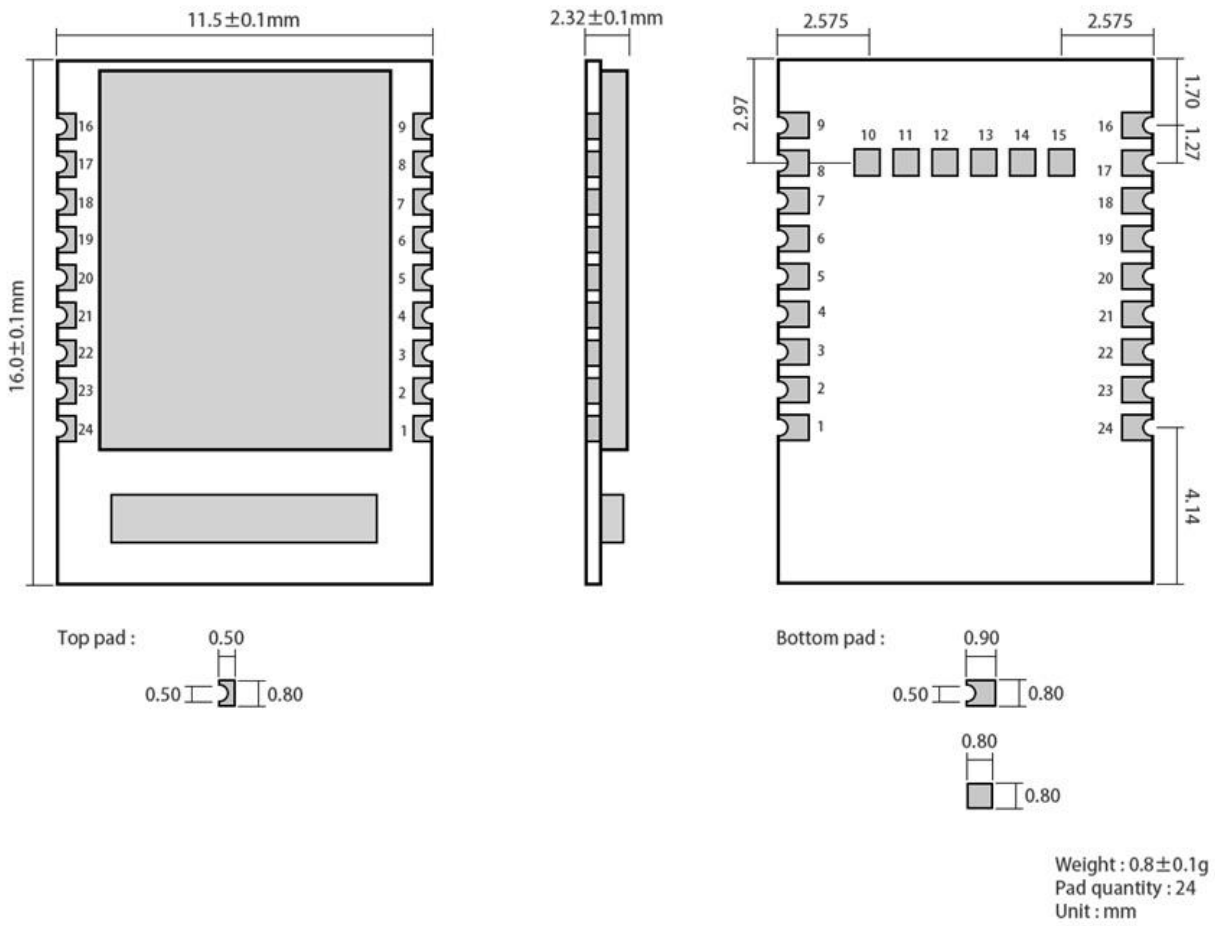


| No. | Item | Direction | Application | Remarks |
|---|---|---|---|---|
| 1 | GND | Input | Ground | - |
| 2 | P0.25 | - | NC | - |
| 3 | P0.26 | - | NC | - |
| 4 | MOD[1] | Input | Mode selection | Low level：configuration mode；<br>High level：transparent mode |
| 5 | WKP[2] | Input | Wake up pin | Wake up：falling edge；<br>Sleep：rising edge。 |
| 6 | DISC | Input | Connection pin | Internal pull up. Valid in |

[1] The internal level of the pin is self-latching. Ground directly or connect to the power supply when driving externally. When it is driven by external MCU, use the push output control.
[2] Same to 1.



Copyright ©2012–2019，Chengdu Ebyte Electronic Technology Co., Ltd

| | | | | |
|---|---|---|---|---|
| | | | disconnected | falling edge |
| 7 | LINK[3] | Output | Link status | Ble link：low level<br>No ble link：high level |
| 8 | DATA[4] | Output | Data indicator | Data indication pin, When the module outputs data through the serial port, the module sets the data pin to low level, indicating that data is being sent. The at instruction response does not change the state of the data pin. |
| 9 | GND | - | Ground | - |
| 10 | P0.02 | - | NC | - |
| 11 | P0.03 | - | NC | - |
| 12 | P0.04 | - | NC | - |
| 13 | P0.05 | - | NC | - |
| 14 | P0.06 | - | NC | - |
| 15 | P0.07 | - | NC | - |
| 16 | GND | - | Ground | Ground |
| 17 | VCC | - | Power | Power |
| 18 | RXD | Input | UART RX pin | - |
| 19 | TXD | Output | UART TX pin | - |
| 20 | RTS | Output | Flow control | Internal pull up |
| 21 | CTS | Input | Flow control | Internal pull up |
| 22 | P0.21/RST | - | Power reset | Valid in low level |
| 23 | SWDCLK | - | - | - |
| 24 | SWDIO | - | - | - |

[3] The internal level of the pin is self-latching. It internally pulls up for high level and pulls down for low level.
[4] Same to 3.



Copyright ©2012–2019，Chengdu Ebyte Electronic Technology Co., Ltd

# 4. Recommended connection diagram

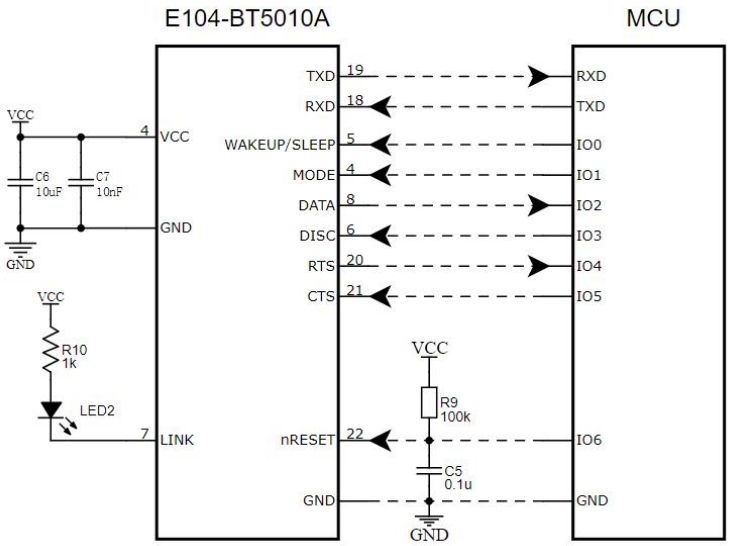


Note: The sensor refers to connecting an external device to a pin with an input function, the peripheral device refers to connecting an external device to a pin with an output function, and the MODE and WAKEUP / SLEEP pins refer to The two control pins are connected to the corresponding level state. If the module needs to be woken up, the WAKEUP / SLEEP (WKP) pin should be connected to a low level, or a falling edge signal should be given to the pin in time. If you need to switch between AT configuration mode and transparent transmission mode, you need to give the corresponding edge of the MODE (MOD) pin.

# 5. Function

## 5.1 Roles

There are three roles: master, slave, and observer.

The master module connects to other Ebyte Bluetooth models. Only one slave can be connected to it. Transparent advertising and format transmission are available. Both manual and automatic connection are allowed.

The slave module connects to other Ebyte Bluetooth models, only one connection is allowed. Only transparent transmission is available for slave.

The observer is only used to print information about the ble device around the module and cannot be connected.

### 5.1.1 Master

1. AT+ROLE=1 choose role as master;
2. AT+SCAN=1 master scanning started;



Copyright ©2012–2019，Chengdu Ebyte Electronic Technology Co., Ltd

3. AT+AUTOCONN configure if it is automatically connected after power on;
4. Once in manual connection，AT+CONN configure to connect specific device;
5. One master and multiple slave connection is available. Maximum connected slave quantity is 4;
6. Print status information when the master connection status changes. See 6.3 for Status Print.

#### 5.1.1.1 Master connecting method

##### 5.1.1.1.1 Condition filtering

The device can be configured to filter by MAC address bonding and service UUID.

UUID filtering is filtered according to the content configured by AT+UUIDSVR. The filtering condition cannot be closed. If MAC address filtering is not enabled, the MAC matches, it is automatically connected to the slave once service UUID is matched.

If the user needs MAC address filtering, MAC address filtering needs to be enabled through AT+BOND=1, and the MAC address is added to the master through AT+BONDMAC. After the master scans to the slave, if it is the same as the binding list MAC address and the service UUID, it automatically connects to the slave device.

If the master is configured as a manual connection, MAC address binding filtering will be ignored, but svruuid is consistent.

##### 5.1.1.1.2 Automatic connection

If configured to connect automatically, the slave is automatically connected after the condition filter is met.

If configured to connect manually, turn on scanning. The master will scan the device with the service UUID matched and output through the UART (the data format is as shown in Figure below, the master outputs the scan result data format). The user connects to the specified slave device using AT+CONN.

| RSSI(Signal quality) | MAC |
|---|---|
| 1byte | 6byte |

### 5.1.2 Slave

1. AT+ROLE=0 choose role as slave.
2. AT+ADV=1 configure normal advertising mode.
3. The broadcast switch is configured to be enabled. Once power on, it automatically enters the broadcast state. Otherwise, the broadcast device cannot be found.
4. After receiving the master connection request, establish a Bluetooth connection to stop the Bluetooth broadcast and enter the data transparent transmission mode.
5. Check 5.5 for advertising configuration.

### 5.1.3 Observer

1. AT+ROLE=2 choose role as observer（Reset to be valid）.
2. After receiving the broadcast, print out the entire contents of the broadcast package through the serial port.
3. It cannot connect any device.

Format：

| LEN | MAC | RSSI | Advdata |
|---|---|---|---|
| 1 byte | 6 bytes | 1 byte | Within 31 bytes |

Notes：LEN is sum of MAC, RSSI and advertising data length.



Copyright ©2012–2019，Chengdu Ebyte Electronic Technology Co., Ltd

4. Scanning window, gap and parameter should be the same.
5. AT command is valid during this time.

## 5.2 Power mode

There are two modes：low power mode and wake-up mode.

### 5.2.1 Low power mode

The low power mode means that the BLE function continues to run after entering this mode, and the peripherals except the wake-up pin are turned off. If you need lower power consumption, you can turn off the broadcast, scan, disconnect all connections, set a longer broadcast gap, scan the gap, and connect the gap by AT command.

Enter low power mode：

1. AT command “AT+SLEEP”: enter low power mode；
2. AT command “AT+DISCSLEEP=1”: disconnect and enter low power mode；
3. AT command “AT+ONSLEEP=1” : enter low power mode once power on；
4. Via pin WKP rising edge，keep high level for 200ms and enter low power mode；

To output “STA：sleep” via serial port after entering low power mode（LOGMSG output unclosed）。

Note: In low power mode, when it is not disconnected, for example, when ble receives data over air, or when the connection status changes, the module temporarily wakes up and outputs the corresponding data, and immediately goes to sleep after the data output is completed. At this point, entering low power consumption, or waking up will not output status data.

### 5.2.2 Wake up mode

In this mode, the peripherals of ble modules works normally. Once it waked up, it outputs “STA：wakeup”.

Wake up mode：

1. Via pin WKP falling edge，keep low level for 200ms and enter wake up mode；
2. Pin RX wakes up, via falling edge of pin RX，keep low level for at least 50us and wake up immediately。

## 5.3 Advertising

### 5.3.1 Normal advertising info.

It includes advertising and scan respone，advertising is actively sent report，scan respone is responsed report after receiving scan request from the master.

#### 5.3.1.1 Advertising

| Fixed field | Len | Manufa field | Manufa data |
|---|---|---|---|
| 020106 | N | 0xFF | configurable，max is 26 bytes |
| For example：020106< Len >FF< Manufa data > | | | |

Users can configure Manufa data only.



Copyright ©2012–2019，Chengdu Ebyte Electronic Technology Co., Ltd

#### 5.3.1.2 Scan response

| Len | Fixed field | UUID | Len | Fixed field | Device name |
|---|---|---|---|---|---|
| 0x03 | 0x03 | FFF0 | N | 0x09 | configurable，max is 22 bytes |
| For example：0303FFF0<len>09< Device name > | | | | | |

Note: users do not need to configure this data.

### 5.3.2 iBeacon advertising info.

1. Commands are for UUID, Major, Minor.
2. AT+ADV=2: set to work in iBeacon mode to advertise immediately.
3. In iBeacon advertising, ble connection is unavailable.

#### 5.3.2.1 Advertising

| iBeacon Prefix | UUID | Major | Minor | Tx-Power |
|---|---|---|---|---|
| 9B | 16B | 2B | 2B | 1B |
| For example：0201061AFF4C000215FDAFDA50693A4E24FB1AFCFC6EB07647825277584 8F00 | | | | |

## 5.4 Configuration

There are two configuration modes: serial port configuration and air configuration. They are basically the same. Before the air configuration, the authentication password AT+AUTH=123456 must be passed. Once it is passed, the module is allowed to use the air configuration. The authentication period is the current connection. When disconnected and reconnected, it needs to be re-authenticated.

The module is in configuration mode before the connection is established. The Mod pin is invalid.

After the connection is successful, it is determined whether the module is currently in the configuration mode or the data transmission mode according to the mod pin level. When mod is high, it is the data transfer mode, and when it is low, it is the configuration mode.

The Mod pin latches the current state when a valid change is detected. Each state change hold time is valid for at least 200ms.

The Mod pin has no effect on the air configuration.

In configuration mode, the mster sends data to “MAST CHANNEL” and the slave returns “CONFIG BUSY” via “SLAVE CHANNEL”.

## 5.5 Data indication

When data is output through the serial port, the DATA pin is set to low level, indicating that data is being transmitted. The AT command response does not change the state of the DATA pin.

Data output delay is enabled via with AT+DATALY=1. After it is turned on, the module first pulls the DATA pin and outputs the data after 10ms.



Copyright ©2012–2019，Chengdu Ebyte Electronic Technology Co., Ltd

Data output delay

No delay of data output

## 5.6 UUID specification

| Service UUID | FFF0（configurable） | | |
|---|---|---|---|
| Characteristic value | UUID | Property | Description |
| SLAVE CHANNEL | FFF1（ configurable ） | read / notify | Slave sends data, master receives data |
| MAST CHANNEL | FFF2（ configurable ） | read / write | Maser sends data, slave receives data |
| CONFIG CHANNEL | FFF3 （ unconfigurable ） | read / write / notify | Channel for configuration over air |

## 5.7 Status and event printing

Command AT+LOGMSG is for configuring status and enable uart printing. printing info as below： connect, disconnect, wakeup and sleep, in format below

| Status | Printing info |
|---|---|
| Connect | \r\n STA:connect\r\n |
| Disconnect | \r\n STA:disconnect\r\n |
| System wake up | \r\n STA:wakeup\r\n |
| Sleep mode | \r\n STA:sleep\r\n |



Copyright ©2012–2019，Chengdu Ebyte Electronic Technology Co., Ltd

# 6. AT command

Note：keep module in wake-up mode before sending cooperation command.

## 6.1 Command instruction

- There is no enter (\r) or LF(\n) required for AT command.
- AT Command return info is ended with \r\n（except for return HEX）
- Command error response format +ERR=[NUM]。（NUM is ACSII）

## 6.2 Error code

| NUM | Description | Error reason | Solution |
|---|---|---|---|
| 0 | Currently parsing AT | Gap between two AT commands is too small | Proper delay is added between two AT commands |
| 1 | Command does not exist | AT command string is incorrect | Check AT command character string |
| 2 | Incorrect parameter length | 1、 AT command length is incorrect；<br>2、Length does not meet range | Check parameter |
| 3 | Invalid parameter | 1 Parameter exceeds value range | Refer to command to check right parameter |
| 4 | Air wakeup authentication failed | Incorrect password | 1、 Use correct configuration password；<br>2、 Reset password via UART |
| 5 | Current device role, this command is not supported | | This command is forbidden in current role |
| 6 | Unknown mistake | | |
| 7 | Save parameter error | | |
| 8 | AT command exists, but operation not supported | | Refer to command and operate again |
| 9 | Disconnected | Module is disconnected | |
| 10 | MAC address does not exist | Added MAC address exists already | |
| 11 | MAC list is full | MAC address bond exceeds the maximum numbers | Delete invalid MAC，add again |
| 12 | MAC address does not exist | Deleted MAC does not exist | |
| 13 | Connection failed | | |
| 14 | Exceeded the maximum number of current connections | The current masters are all connected | 1、 Disconnect current devices；<br>2、 Modify maximum connection numbers； |
| 15 | Device does not exist | | |

Error code list



Copyright ©2012–2019，Chengdu Ebyte Electronic Technology Co., Ltd

## 6.3 Status printing

| Status | Printing info | |
|---|---|---|
| Connected successfully | Slave | \r\nSTA:connect\r\n |
| | Master | \r\nSTA:connect,1,<MAC\r\n |
| Disconnect | Slave | \r\nSTA:disconnect\r\n |
| | Master | \r\nSTA:disconnect,1\r\n |
| System wake up | \r\nSTA:wakeup\r\n | |
| Sleep mode | \r\nSTA:sleep\r\n | |

Status printing list

## 6.4 Command list

### 6.4.1 AT test command

| command | respond |
|---|---|
| AT | +OK |
| Remark：None | |

### 6.4.2 AT+RESET Reset command

| command | respond |
|---|---|
| AT+RESET | +OK |
| Remark：take into effect immediately | |

### 6.4.3 AT+RESTORE restore factory setting

| command | respond |
|---|---|
| AT+RESTORE | OK |
| Remark：<br>1、 after the reset, automatically restart；<br>2、 During the process of restoring the factory settings, any form of reset is prohibited, must not power off before it is completed.； | |

### 6.4.4 AT+BAUD baud rate

| command | | respond |
|---|---|---|
| Inquire | AT+BAUD? | +OK=[para] |
| Set | AT+BAUD=[para] | +OK：success |



Copyright ©2012–2019，Chengdu Ebyte Electronic Technology Co., Ltd

| | | |
|---|---|---|
| | | +ERR=[NUM]：error |
| Parameter | | |

| para（ASCII） | Baud rate(bps) |
|---|---|
| 0 | 1200 |
| 1 | 2400 |
| 2 | 4800 |
| 3 | 9600 |
| 4 | 14400 |
| 5 | 19200 |
| 6 | 28800 |
| 7 | 38400 |
| 8 | 57600 |
| 9 | 76800 |
| 10 | 115200（default） |
| 11 | 230400 |
| 12 | 250000 |
| 13 | 460800 |
| 14 | 921600 |

| | |
|---|---|
| Remark | take into effect after reset |
| For example | AT+BAUD=10, baud rate is 115200<br>HEX: 41,54,2B,42,41,55,44,3D,31,30 |

### 6.4.5 AT+PARI parity

| Command | | respond |
|---|---|---|
| Inquire | AT+PARI? | +OK=[para] |
| Set | AT+PARI=[para] | +OK：success<br>+ERR=[NUM]：error |
| Parameter | | |

| para(ASCII) | Description |
|---|---|
| 0 | None（default） |
| 1 | Even |

| | |
|---|---|
| Remark | take into effect after reset and save when power off |
| For example | AT+PARI=0 |

### 6.4.6 AT+ROLE Bluetooth role

| Command | | respond |
|---|---|---|
| Inquire | AT+ROLE? | +OK=[para] |
| Set | AT+ROLE =[para] | +OK：success<br>+ERR=[NUM]：error |



Copyright ©2012–2019，Chengdu Ebyte Electronic Technology Co., Ltd

| | |
|---|---|
| Parameter | <table><tr><th>Para(ASCII)</th><th>Description</th></tr><tr><td>0</td><td>Slave（default）</td></tr><tr><td>1</td><td>Master</td></tr><tr><td>2</td><td>Observer</td></tr></table> |
| Remark | take into effect after reset and save when power off |

### 6.4.7 AT+DEVMANUF modify manufacture name

| command | | respond |
|---|---|---|
| Inquire | AT+DEVMANUF? | +OK=[para] |
| Set | AT+DEVMANUF =[para] | +OK：success<br>+ERR=[NUM]：error |
| Parameter | para(string): manufacture name<br>Default: CDEBYTE; | |
| Remark | 1、 take into effect after reset and save when power off<br>2、 string is up to 32bytes | |

### 6.4.8 AT+DEVSERIAL modify device serial

| command | | respond |
|---|---|---|
| Inquire | AT+DEVSERIAL? | +OK=[para] |
| Set | AT+ DEVSERIAL =[para] | +OK：success<br>+ERR=[NUM]：error |
| Parameter | para(string): device serial<br>default:123456; | |
| Remark | 1、 take into effect after reset and save when power off<br>2、 string is up to 32bytes | |

### 6.4.9 AT+DEVMODEL modify device model

| Command | | respond |
|---|---|---|
| Inquire | AT+DEVMODEL? | +OK=[para] |
| Set | AT+ DEVMODEL =[para] | +OK：success<br>+ERR=[NUM]: error |
| Parameter | para(string): device model NO.<br>Default:E104-BT50; | |
| Remark | 1、 take into effect after reset and save when power off<br>2、 string is up to 32bytes | |



Copyright ©2012–2019，Chengdu Ebyte Electronic Technology Co., Ltd

### 6.4.10 AT+DEVHWER modify hardware version

| Command | | respond |
|---|---|---|
| Inquire | AT+DEVHWVER? | +OK=[para] |
| Set | AT+ DEVHWVER =[para] | +OK：success<br>+ERR=[NUM]：error |
| Parameter | para(string): device hardware version<br>Default:V1.0; | |
| Remark | 1、 take into effect after reset and save when power off<br>2、 string is up to 32bytes | |

### 6.4.11 AT+DEVSWVER modify software version

| command | | respond |
|---|---|---|
| Inquire | AT+DEVSWVER? | +OK=[para] |
| Set | AT+ DEVSWVER =[para] | +OK：success<br>+ERR=[NUM]：error |
| Parameter | para(string): device software version<br>Default: V1.0; | |
| Remark | 1、 take into effect after reset and save when power off<br>2、 string is up to 32bytes | |

### 6.4.12 AT+DEVID modify device ID

| command | | respond |
|---|---|---|
| Inquire | AT+DEVID? | +OK=[para] |
| Set | AT+ DEVID =[para] | +OK：success<br>+ERR=[NUM]：error |
| Parameter | para（HEX）:device ID;<br>Default: <MAC> 00 00 | |
| Remark | 1、 take into effect after reset and save when power off；<br>2、 Max length is 8bytes | |

### 6.4.13 AT+ADV enable advertising

| command | | respond |
|---|---|---|
| Inquire | AT+ADV? | +OK=[para] |
| Set | AT+ADV=[para] | +OK：success<br>+ERR=[NUM]：error |



Copyright ©2012–2019，Chengdu Ebyte Electronic Technology Co., Ltd

| | | |
|---|---|---|
| Parameter | para（ASCII） | Description |
| | 0 | Close advertising |
| | 1 | Normal advertising（default） |
| | 2 | iBeacon |
| Remark | 1、 Take into effect immediately（if advertising is not enabled, or it is connected, then take into effect next time），save when power off；<br>2、 Available for slave only. | |

## 6.4.14 AT+ADVDAT advertising data

| command | | respond |
|---|---|---|
| Inquire | AT+ADVDAT? | +OK=[para] |
| Set | AT+ADVDAT=[para] | +OK：success<br>+ERR=[NUM]：error |
| Set<br>(do not save) | AT+ADVDAT1=[para] | |
| Parameter | para(HEX):<br>1、Available for ASCII、HEX<br>2、Length is within 26 bytes | |
| Remark | 1、 Take into effect immediately（if advertising is not enabled, or it is connected, then take into effect next time），save when power off；<br>2、 Advertising available for slave only, other role can configurate； | |
| For example | command：41 54 2b 41 44 56 44 41 54 3d 31 32 33 34 35 36 37 38 39 30；<br>advertising data：31 32 33 34 35 36 37 38 39 30 | |

## 6.4.15 AT+ADVINTV advertising gap

| command | | respond |
|---|---|---|
| Inquire | AT+ADVINTV? | +OK=[para] |
| Set | AT+ADVINTV=[para] | +OK：success<br>+ERR=[NUM]：error |
| Parameter | para(ASCII):32~16384<br>Default: 1600（1S） | |
| Remark | 1、 Take into effect immediately（if advertising is not enabled, or it is connected, then take into effect next time），save when power off；<br>2、 Advertising available for slave only, other role can configurate； | |
| For example | AT+ADVINTV=1600<br>Set advertising gap：1600*0.625=1S | |

## 6.4.16 AT+IBCNUUID iBeacon UUID command

| command | respond |
|---|---|



Copyright ©2012–2019，Chengdu Ebyte Electronic Technology Co., Ltd

| | | |
|---|---|---|
| Inquire | AT+IBCNUUID? | +OK=[para1] |
| Set | AT+IBCNUUID=[para] | +OK：success<br>+ERR=[NUM]：error |
| Parameter | para(HEX)：16 位 UUID | |
| Remark | 1、 Take into effect immediately（if advertising is not enabled, or it is connected, then take into effect next time），save when power off；<br>2、 Advertising available for slave only, other role can configurate； | |
| For example | Set iBeacon UUID:<br>“FDA50693A4E24FB1AFCFC6EB07647825”AT+IBCNUUID=FDA50693A4E24FB1AFCFC6EB07647825 | |

## 6.4.17 AT+MAJOR iBeacon Major Command

| command | | respond |
|---|---|---|
| Inquire | AT+MAJOR? | +OK=[para] |
| Set | AT+MAJOR=[para] | +OK：success<br>+ERR=[NUM]：error |
| Parameter | para(ACSII)： 1~65535<br>Default: 258<br>Note: major = 0x0201, actually 0x0102 | |
| Remark | 1. Take into effect immediately（if advertising is not enabled, or it is connected, then take into effect next time），save when power off；<br>2. Advertising available for slave only, other role can configurate； | |

## 6.4.18 AT+MINOR iBeacon Minor command

| command | | respond |
|---|---|---|
| Inquire | AT+Minor? | +OK=[para] |
| Set | AT+Minor=[para] | +OK：success<br>+ERR=[NUM]：error |
| Parameter | para(ACSII)： 1~65535<br>Default: 772<br>Note: minor = 0x0403, actually 0x0403 | |
| Remark | 1. Take into effect immediately（if advertising is not enabled, or it is connected, then take into effect next time），save when power off；<br>2. Advertising available for slave only, other role can configurate； | |

## 6.4.19 AT+IPWR modify ibeacn tx_power

| command | | respond |
|---|---|---|
| Inquire | AT+IPWR? | +OK=[para] |
| Set | AT+ IPWR =[para] | +OK：success |



Copyright ©2012–2019，Chengdu Ebyte Electronic Technology Co., Ltd

| | | |
|---|---|---|
| | | +ERR=[NUM]：error |
| Parameter | para(ACSII)： -128~127<br>Default: 0 | |
| Remark | 1. Take into effect immediately（if advertising is not enabled, or it is connected, then take into effect next time），save when power off；<br>2. Advertising available for slave only, other role can configurate； | |

## 6.4.20 AT+NAME advertise device name

| command | | respond |
|---|---|---|
| Inquire | AT+NAME? | +OK=[para] |
| Set | AT+NAME=[para] | +OK：success<br>+ERR=[NUM]：error |
| Set<br>（Do not save） | AT+NAME1=[para] | |
| Parameter | para(HEX): advertise device name<br>device name is within 22 bytes<br>Default: E104-BT5010A | |
| Remark | 1、 Take into effect immediately, save when power off<br>2、 Advertising available for slave only, other role can configurate | |

## 6.4.21 AT+CONPARAMS connection gap configuration

| command | | respond |
|---|---|---|
| Inquire | AT+CONPARAMS? | +OK=[ intv],[ latency],[timeout] |
| Set | AT+ CONPARAMS =<br>[intv],[latency],[timeout] | +OK：success<br>+ERR=[NUM]：error |
| Parameter | [intv]（ASCII) : connection gap，range，6~3200；<br>[latency] (ASCII) : slave delay. range，0~499<br>[timeout]（ASCII）: connection timeout， range，10~3200<br>Default：16，0，400 | |
| Remark | Take into effect immediately, save when power off | |
| Note | 1、 Connection timeout must be more than connection gap<br>2、 Timeout *4 > (1 + latency)* intv;<br>3、 Error parameter device will not save<br>4、 We do not recommend to change the master connection gap | |
| For example | AT+CONPARAMS=16,0,400<br>Connection gap 16*1.25ms,slave will delay：0，16*1.25ms, connection timeout 400*1.25ms | |



Copyright ©2012–2019，Chengdu Ebyte Electronic Technology Co., Ltd

### 6.4.22 AT+DISCON disconnect command

| command | | respond |
|---|---|---|
| Set<br>(only for master) | AT+DISCON=[para] | +OK：success<br>+ERR=[NUM]：error |
| Disconnect all | AT+DISCON | +OK：success<br>+ERR=[NUM]：error |
| Parameter | Para (ASCII) / description<br>0~3 / Disconnect all | |
| Remark | 1、take into effect immediately.<br>2、as slave, only disconnect all is available；<br>3、Disconnect all is available for master and slave mode；<br>4、if para specified connection but does not connect, the module will return +OK. | |

### 6.4.23 AT+DATDLY Data output delay

| command | | respond |
|---|---|---|
| Query | AT+DATDLY? | +OK=[para] |
| Set | AT+DATDLY=[para] | +OK：success<br>+ERR=[NUM]：error |
| Parameter | para（ASCII） / description<br>0 / close<br>1 / enable(default) | |
| Remarks | Take into effect immediately, save when power off | |

### 6.4.24 AT+MAC local MAC address

| command | | respond |
|---|---|---|
| Query | AT+MAC? | +OK=[para] |
| Parameter | para（HEX）:MAC address<br>For example：F0E1D2C3B4A5 | |
| Remarks | Take into effect immediately, save when power off | |
| For example | Command：AT+MAC?<br>Return：2B 4F 4B 3D FE 30 EE 50 35 DA<br>Explanation: The local MAC address is DA 35 50 EE 30 FE<br>Note: Output is small-endian mode output | |



Copyright ©2012–2019，Chengdu Ebyte Electronic Technology Co., Ltd

### 6.4.25 AT+PEERMAC connect to device MAC

| command | | respond |
|---|---|---|
| Set | AT+PEERMAC? | +OK=[para]：success<br>+ERR=[NUM]: error |
| Parameter | para（HEX）:MAC address | |
| Remarks | Take into effect immediately, only valid for slave | |
| For example | Command：AT+PEERMAC?<br>Return：2B 4F 4B 3D FE 30 EE 50 35 DA<br>Description：local MAC is FE 30 EE 50 35 DA | |

### 6.4.26 AT+BOND enable bonding

| command | | respond |
|---|---|---|
| Query | AT+BOND? | +OK=[para] |
| Set | AT+BOND=[para] | +OK：success<br>+ERR=[NUM]：error |
| Parameter | | |
| Remarks | Take into effect immediately, save when power off | |

| para（ASCII） | description |
|---|---|
| 0 | Bonding disabled（default） |
| 1 | Enable bonding |

### 6.4.27 AT+BONDMAC add more bond MAC address

| command | | respond |
|---|---|---|
| Query | AT+BONDMAC? | +OK=[sum][ [mac] [mac]…] |
| Set | AT+BONDMAC=[mac] | +OK success<br>+ERR=[NUM]：error |
| Parameter | sum(HEX): current bond MAC address numbers；<br>mac(HEX)：6bytes mac address; | |
| Remarks | Take into effect immediately, save when power off | |
| For example | Query：AT+BONDMAC?<br>Return: B 4F 4B 3D 03 CC 34 27 1A 0C D4 3D AC 82 16 0F 58 D2 D4 C3 07 0E C4 | |
| | Set：41 54 2B 42 4F 4E 44 4D 41 43 3D CC 34 27 1A 0C D4<br>Return：+OK | |

### 6.4.28 AT+BONDDEL delete bond MAC address

| command | respond |
|---|---|



Copyright ©2012–2019，Chengdu Ebyte Electronic Technology Co., Ltd

| | | |
|---|---|---|
| Set | AT+BONDDEL=[mac] | +OK<br>+ERR=[NUM] |
| Parameter | mac：6bytes mac address | |
| Remarks | 1、Take into effect immediately, save when power off<br>2、 When MAC is (0xff,0xff,0xff,0xff,0xff,0xff）delete all MAC address，or delate specified mac address； | |

## 6.4.29 AT+SCAN advertising scan

| command | | respond |
|---|---|---|
| Query | AT+SCAN? | +OK=[para] |
| Set | AT+SCAN=[para] | +OK：success<br>+ERR=[NUM]：error |
| Parameter | para（ASCII） / Description<br>0 / Scan closed<br>1 / Scan enabled(default) | |
| Remarks | 1、 Take into effect immediately, save when power off<br>2、 If current connected masters are the maximum, no scanning will be enabled<br>3、 Scanning is only available for master and observer | |

## 6.4.30 AT+SCANINTV scan interval

| command | | Respond |
|---|---|---|
| Query | AT+SCANINTV? | +OK=[para] |
| Set | AT+SCANINTV=[para] | +OK：success<br>+ERR=[NUM]：error |
| Parameter | para(ASCII):4~65535<br>Default: 256 | |
| Remarks | 1、Take into effect immediately, save when power off<br>2、Scanning interval is more than scanning window<br>3、Unavailable for slave, but configuration is ok | |
| For example | AT+SCANINTV=256<br>Interval：256*0.625 = 160ms | |

## 6.4.31 AT+SCANWND scan window

| command | | respond |
|---|---|---|
| Query | AT+SCANWND? | +OK=[para] |
| Set | AT+SCANWND=[para] | +OK：success<br>+ERR=[NUM]：error |



Copyright ©2012–2019，Chengdu Ebyte Electronic Technology Co., Ltd

| | |
|---|---|
| Parameter | para(ASCII): 4~65535<br>Default: 128； |
| Remarks | 1、Take into effect immediately, save when power off<br>2、Scanning interval is more than scanning window<br>3、Unavailable for slave, but configuration is ok |
| For example | AT+SCANWND=128<br>Interval：128*0.625 = 80ms |

## 6.4.32 AT+AUTOCONN connect automatically

| command | | respond |
|---|---|---|
| Query | AT+AUTOCONN? | +OK=[para] |
| Set | AT+ AUTOCONN =[para] | +OK：success<br>+ERR=[NUM]：error |
| Parameter | | |
| Remarks | 1、Take into effect immediately, save when power off | |

| para（ASCII） | Description |
|---|---|
| 0 | Manual connection |
| 1 | Automatic connection (default) |

## 6.4.33 AT+CONN specify connection

| command | | respond |
|---|---|---|
| Set | AT+ CONN = [mac] | +OK：success<br>+ERR=[NUM]：error |
| Parameter | mac(hex): specify mac connection | |
| Remarks | 1、Take into effect immediately, save when power off | |

## 6.4.34 AT+UUIDSVR128 set 128-bit UUID

| command | | respond |
|---|---|---|
| Query | AT+UUIDSVR128? | +OK=[para] |
| Set | AT+ UUIDSVR128=[para] | +OK：success<br>+ERR=[NUM]：error |
| Parameter | para(HEX):16-bit uuid. | |
| Remarks | 1、 take into effect after reset and save when power off。<br>2、 the 2，3byte is 16-bit uuid, ranging from 1~65535;<br>3、 128-bit UUID，except for 2，3byte, are used for the slave, the master and configuration channel.(Check details about uuid from《BLUETOOTH SPECIFICATION Version 5.0 \| Vol 3, Part B 2.5.1 UUID》). | |
| For example | Set 128-bit UUID： | |



Copyright ©2012–2019，Chengdu Ebyte Electronic Technology Co., Ltd

| | |
|---|---|
| | “11 22 33 44 55 66 77 88 99 00 aa bb cc dd ee ff”(HEX)<br>AT command is （HEX）：<br>61 74 2b 75 75 69 64 73 76 72 31 32 38 3d 11 22 33 44 55 66 77 88 99 00 aa bb cc dd ee ff |

### 6.4.35 AT+UUIDSVR Bluetooth service UUID

| command | | respond |
|---|---|---|
| Query | AT+UUIDSVR? | +OK=[para] |
| Set | AT+UUIDSVR=[para] | +OK：success<br>+ERR=[NUM]：error |
| Parameter | para(ASCII): UUID value<br>1 ~ 65535 | |
| Remarks | 1、Take into effect after reset, save when power off<br>2、for the master, service UUID is necessary for connection filtering，thus master UUID shall be same as that of the slave. | |

### 6.4.36 AT+UUIDCHARA1 SLAVE CHANNEL characteristic UUID

| command | | respond |
|---|---|---|
| Query | AT+UUIDCHARA1? | +OK=[para] |
| Set | AT+UUID CHARA1=<br>[para] | +OK：success<br>+ERR=[NUM]：error |
| Parameter | para(ASCII): 1 ~ 65535<br>Default: 65521 | |
| Remarks | 1、 Take into effect after reset, save when power off<br>2、 The slave channel for data sent from the salve to the master. | |

### 6.4.37 AT+UUIDCHARA2 MAST CHANNEL characteristic UUID command

| command | | respond |
|---|---|---|
| Query | AT+UUIDCHARA2? | +OK=[para] |
| Set | AT+UUID CHARA2=<br>[para] | +OK：success<br>+ERR=[NUM]：error |
| Parameter | para(ASCII): 1 ~ 65535；<br>Default: 65522 | |
| Remarks | 1、 Take into effect after reset, save when power off<br>2、 The master channel for data sent from the master to the slave. | |

### 6.4.38 AT+VER query software version No.

| Command | respond |
|---|---|



Copyright ©2012–2019，Chengdu Ebyte Electronic Technology Co., Ltd

| | | |
|---|---|---|
| Query | AT+VER? | +OK=[para] |
| Parameter | para: version NO. | |
| Remarks | Take into effect immediately | |
| For example | command：AT+VER?<br>return：+OK=1.0.0 | |

### 6.4.39 AT+AUTH set authentication password over air

| command | | respond |
|---|---|---|
| Set | AT+AUTH =[para] | +OK：success<br>+ERR=[NUM]：error |
| Parameter | para(HEX): 6-byte password | |
| Remarks | 1、 This command is for set over air<br>2、 Default password：123456 | |
| For example | AT+AUTH=123456 | |

### 6.4.40 AT+UPAUTH change authentication password over air

| command | | respond |
|---|---|---|
| Query | AT+UPAUTH? | +OK=[para] |
| Set | AT+UPAUTH =[para] | +OK：success<br>+ERR=[NUM]：error |
| Parameter | para(HEX): 6-byte password | |
| Remarks | Take into effect immediately, save after power off | |

### 6.4.41 AT+PWR transmitting power

| command | | respond |
|---|---|---|
| Query | AT+ PWR? | +OK=[para] |
| Set | AT+ PWR =[para] | +OK：success<br>+ERR=[NUM]：error |



Copyright ©2012–2019，Chengdu Ebyte Electronic Technology Co., Ltd

| | | |
|---|---|---|
| Parameter | para(ASCII) | val |
| | 0 | 4 dBm |
| | 1 | 3 dBm |
| | 2 | 0 dBm（default） |
| | 3 | -4 dBm |
| | 4 | -8 dBm |
| | 5 | -12 dBm |
| | 6 | -16 dBm |
| | 7 | -20 dBm |
| | 8 | -40 dBm |
| Remarks | Take into effect immediately, save after power off | |

## 6.4.42 AT+ONSLEEP sleep once power on

| command | | respond |
|---|---|---|
| Query | AT+ONSLEEP? | +OK=[para] |
| Set | AT+ONSLEEP =[para] | +OK：success<br>+ERR=[NUM]：error |
| Parameter | | |
| Remarks | Take into effect immediately, save after power off | |

| para（ASCII） | Description |
|---|---|
| 0 | Disenable(default) |
| 1 | Enable |

## 6.4.43 AT+DISCSLEEP disconnect and get into sleep

| command | | respond |
|---|---|---|
| Query | AT+DISCSLEEP? | +OK=[para] |
| Set | AT+DISCSLEEP =[para] | +OK：success<br>+ERR=[NUM]：error |
| Parameter | | |
| Remarks | Take into effect immediately, save after power off | |

| para（ASCII） | description |
|---|---|
| 0 | Disconnect (default) |
| 1 | Disconnect and get into sleep |

## 6.4.44 AT+SLEEP get into sleep mode immediately

| command | respond |
|---|---|



Copyright ©2012–2019，Chengdu Ebyte Electronic Technology Co., Ltd

| | | |
|---|---|---|
| Set | AT+SLEEP | +OK |
| Parameter | None | |
| Remarks | Take into effect immediately | |

### 6.4.45 AT+LOGMSG operating condition output

| command | | respond |
|---|---|---|
| Query | AT+LOGMSG? | +OK=[para] |
| Set | AT+LOGMSG =[para] | +OK：success<br>+ERR=[NUM]：error |
| Parameter | | |
| Remarks | Take into effect immediately, save after power off | |

| para（ASCII） | description |
|---|---|
| 0 | Disenable(default) |
| 1 | Enable |



Copyright ©2012–2019，Chengdu Ebyte Electronic Technology Co., Ltd

# 7. Quick start

Recommended debugging and testing software：

- Serial tool on PC - SSCOM.exe;
- Ble debugging APP on phone- nRF connect.

## 7.1 Guidance for configuration mode

### 7.1.1 UART configuration

- Check if the module is in configuration mode（When not connected, it can be configured, otherwise, set pin mod as low level）
- Set SSCOM string related parameter（default：115200，8，1，none, no flow control）；

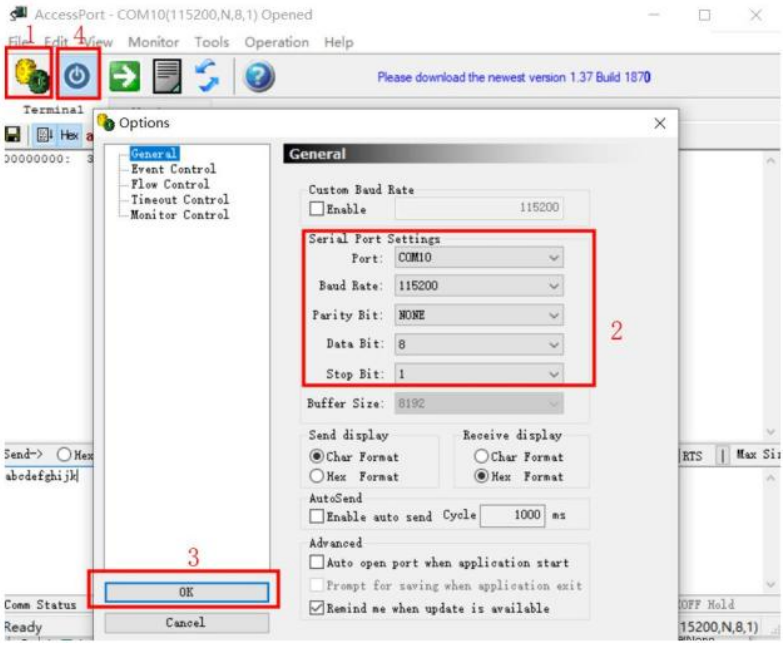


SSCOM parameter setting figure

- Refer to 6.4 command list to configure the module；

### 7.1.2 Configuration over air

- When module works as the slave, configuration over air is available.
- Open app “nRF connect”, start scanning device， find “E104-BT5010A” to connect；



Copyright ©2012–2019，Chengdu Ebyte Electronic Technology Co., Ltd

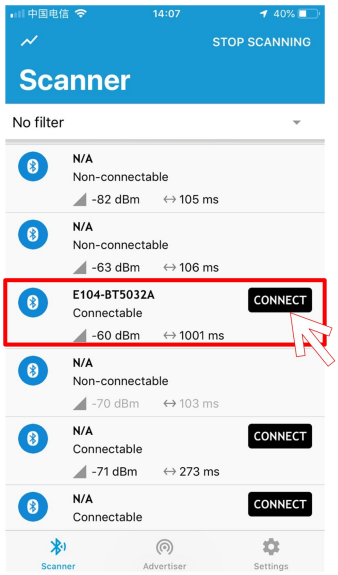


nRF connect scanning figure

- Open service fff0 of uuid，enable configuration channel notify；

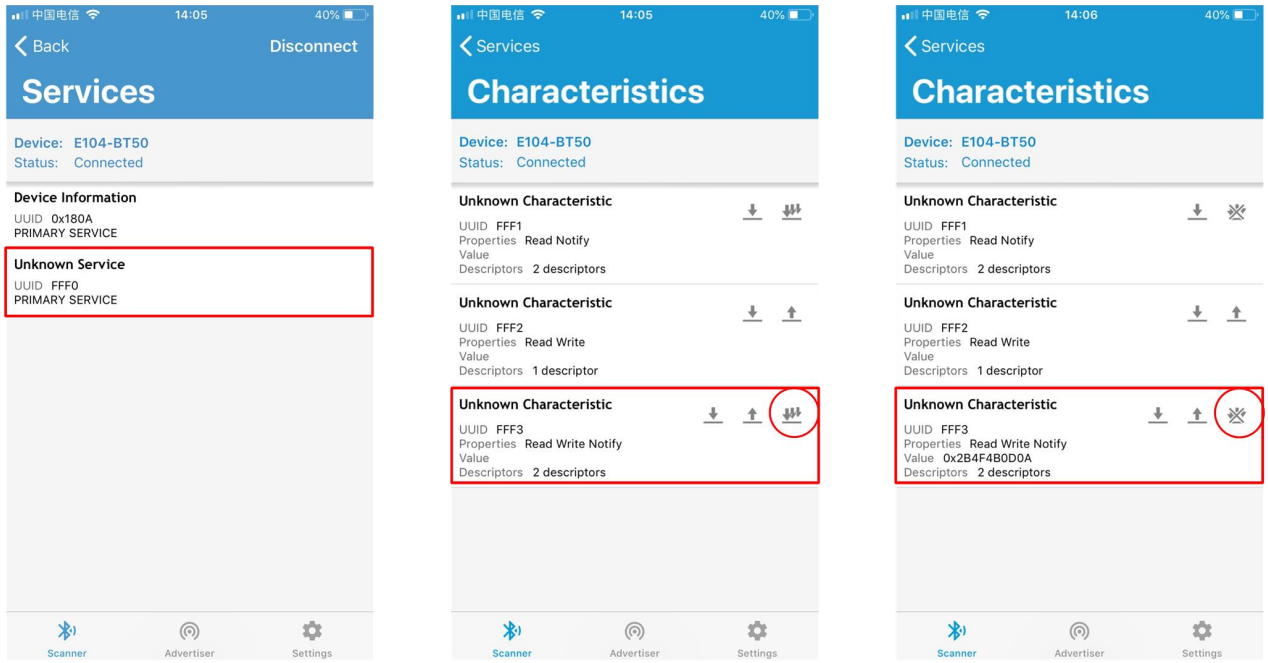


nRF connect-connect and enable notify

- Send authentication command（at+auth=12345），when it returns “0x2befeb0d0a”, means successful authentication；



Copyright ©2012–2019，Chengdu Ebyte Electronic Technology Co., Ltd

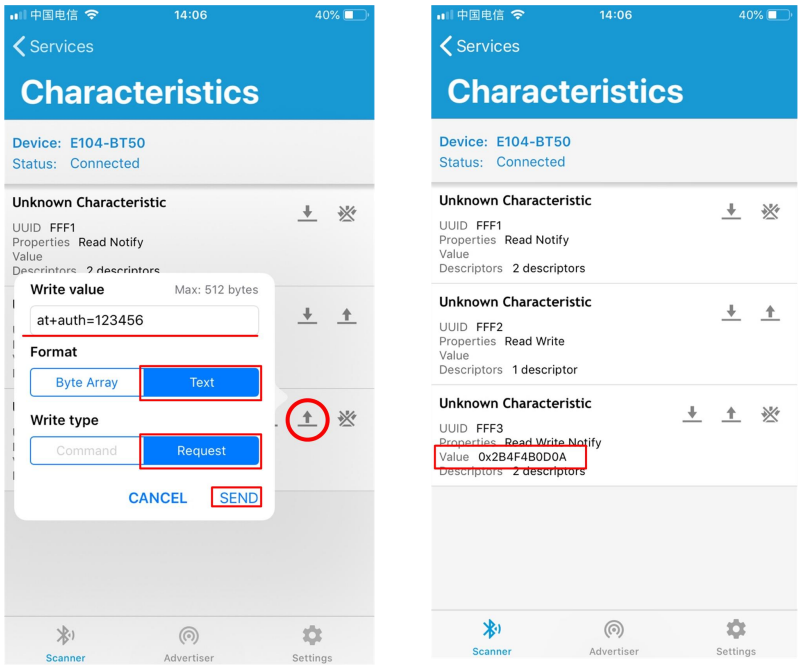


Authentication of configuration over air

- Refer to 6.4 command list to configure the module;

## 7.2 Data transmission

Test condition:

- Refer to 7.1, set one module as the master and the other one as the slave;
- Test software: SSCOM;
- Other parameters are as default.

### 7.2.1 Data transparent transmission

1. Once powered on, the master and the slave enable logmsg to print（at+logmsg=1）;
2. Set module as transparent transmission mode（AT+TRANMD=1）;
3. Once connected , the master prints “STA:connect,0,619AA43CBAF3”; the slave prints “STA:connected”. LINK pin is low.

Please refer to figure below. From master’s printing info, the value before the MAC address is sentences from the slave.

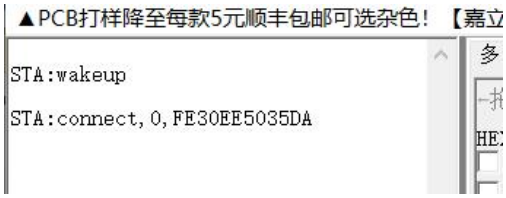


Automatically connect and print once the master is powered on

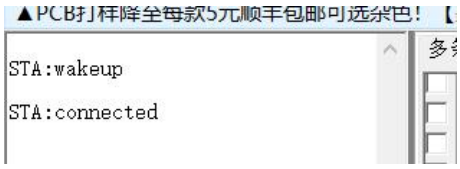


Automatically connect and print once the slave is powered on

4. Data “0123456789” is sent from the master to the slave（refer to master’s transparent transmission below）;



Copyright ©2012–2019，Chengdu Ebyte Electronic Technology Co., Ltd

5. Data “abcdefghijk” is sent from the slave to the master (refer to master’s transparent transmission below)；

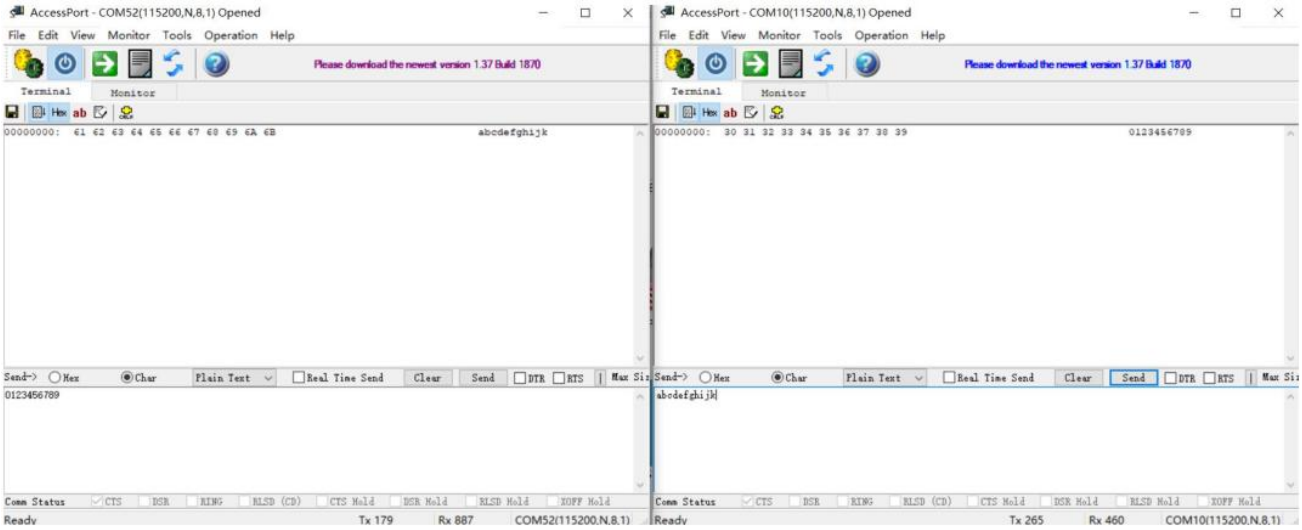


Master’s transparent transmission

# 7. Hardware design

- It is recommended to use a DC stabilized power supply. The power supply ripple factor is as small as possible and the module needs to be reliably grounded.
- Please pay attention to the correct connection of the positive and negative poles of the power supply.
- Reverse connection may cause permanent damage to the module；
- Please check the power supply to ensure it is within the recommended voltage otherwise when it exceeds the maximum value the module will be permanently damaged；
- Please check the stability of the power supply, the voltage cannot be fluctuated frequently；
- When designing the power supply circuit for the module, it is often recommended to reserve more than 30% of the margin, so the whole machine is beneficial for long-term stable operation.
- The module should be as far away as possible from the power supply, transformers, high-frequency wiring and other parts with large electromagnetic interference
- High-frequency digital routing, high-frequency analog routing, and power routing must be avoided under the module. If it is necessary to pass through the module, assume that the module is soldered to the Top Layer, and the copper is spread on the Top Layer of the module contact part(well grounded), it must be close to the digital part of the module and routed in the Bottom Layer；
- Assuming the module is soldered or placed over the Top Layer, it is wrong to randomly route over the Bottom Layer or other layers, which will affect the module's spurs and receiving sensitivity to varying degrees.
- It is assumed that there are devices with large electromagnetic interference around the module that will greatly affect the performance. It is recommended to keep them away from the module according to the strength of the interference. If necessary, appropriate isolation and shielding can be done；
- Assume that there are traces with large electromagnetic interference (high-frequency digital, high-frequency analog, power traces) around the module that will greatly affect the performance of the module. It is recommended to stay away from the module according to the strength of the interference. If necessary, appropriate isolation and shielding can be done.
- Try to stay away from some physical layers such as TTL protocol at 2.4GHz , for example: USB3.0；
- The mounting structure of antenna has a great influence on the performance of the module. It is necessary to ensure that the


Copyright ©2012–2019，Chengdu Ebyte Electronic Technology Co., Ltd

antenna is exposed, preferably vertically upward. When the module is mounted inside the case, use a good antenna extension cable to extend the antenna to the outside；

- The antenna must not be installed inside the metal case, which will cause the transmission distance to be greatly weakened.



Copyright ©2012–2019，Chengdu Ebyte Electronic Technology Co., Ltd

# 8. FAQ

## 8.1 Communication range is too short

- The communication distance will be affected when obstacle exists.
- Data lose rate will be affected by temperature, humidity and co-channel interference.
- The ground will absorb and reflect wireless radio wave, so the performance will be poor when testing near ground.
- Sea water has great ability in absorbing wireless radio wave, so performance will be poor when testing near the sea.
- The signal will be affected when the antenna is near metal object or put in a metal case.
- Power register was set incorrectly, air data rate is set as too high (the higher the air data rate, the shorter the distance).
- The power supply low voltage under room temperature is lower than 2.5V, the lower the voltage, the lower the transmitting power.
- Due to antenna quality or poor matching between antenna and module.

## 8.2 Module is easy to damage

- Please check the power supply source, ensure it is 2.0V~3.6V, voltage higher than 3.6V will damage the module.
- Please check the stability of power source, the voltage cannot fluctuate too much.
- Please make sure antistatic measure are taken when installing and using, high frequency devices have electrostatic susceptibility.
- Please ensure the humidity is within limited range, some parts are sensitive to humidity.
- Please avoid using modules under too high or too low temperature.

## 8.3 Bit error rate is too high

- There are co-channel signal interference nearby, please be away from interference sources or modify frequency and channel to avoid interference.
- Poor power supply may cause messy code. Make sure that the power supply is reliable
- The extension line and feeder quality are poor or too long, so the bit error rate is high.



Copyright ©2012–2019，Chengdu Ebyte Electronic Technology Co., Ltd

# 9. Production Guidance

## 9.1 Reflow soldering temperature

| Profile Feature | Sn-Pb Assembly | Pb-Free Assembly |
|---|---|---|
| Solder Paste | Sn63/Pb37 | Sn96.5/Ag3/Cu0.5 |
| Preheat Temperature min （Tsmin） | 100℃ | 150℃ |
| Preheat temperature max (Tsmax) | 150℃ | 200℃ |
| Preheat Time (Tsmin to Tsmax)(ts) | 60-120 sec | 60-120 sec |
| Average ramp-up rate(Tsmax to Tp) | 3℃/second max | 3℃/second max |
| Liquidous Temperature (TL) | 183℃ | 217℃ |
| Time（tL）Maintained Above（TL） | 60-90 sec | 30-90 sec |
| Peak temperature（Tp） | 220-235℃ | 230-250℃ |
| Aveage ramp-down rate（Tp to Tsmax） | 6℃/second max | 6℃/second max |
| Time 25℃ to peak temperature | 6 minutes max | 8 minutes max |

## 9.2 Reflow soldering curve

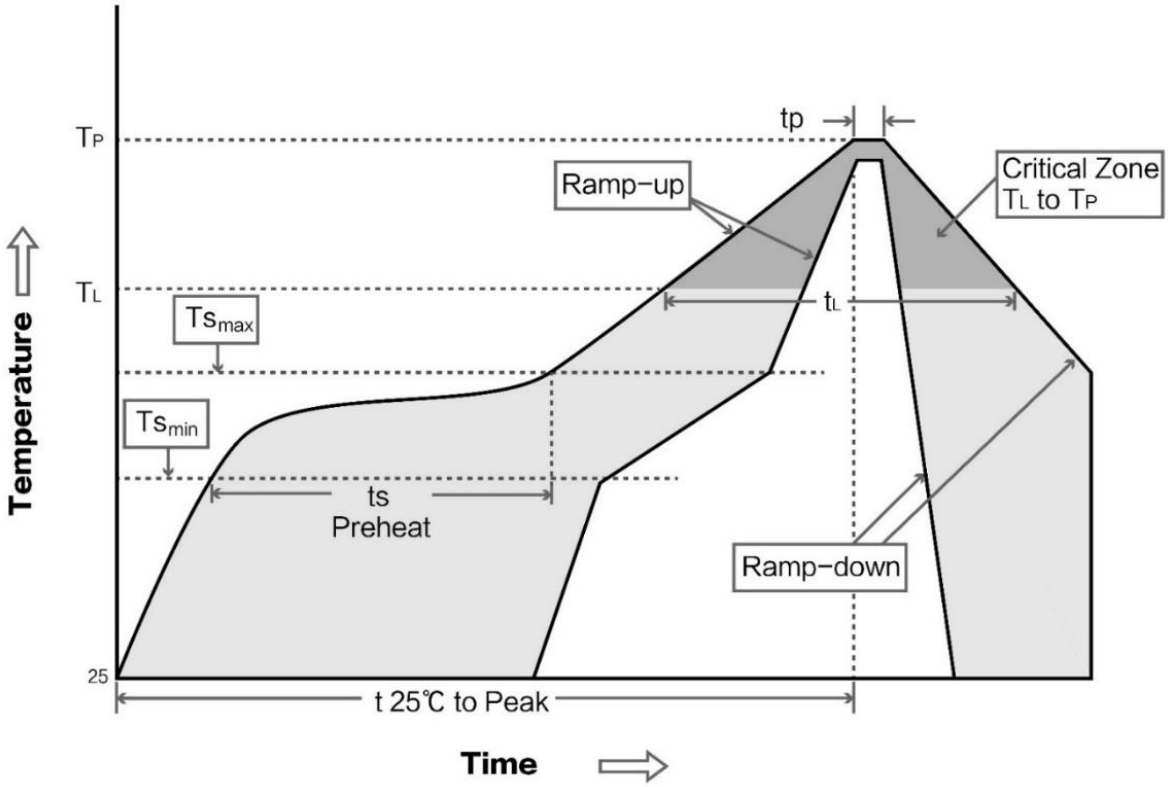




Copyright ©2012–2019，Chengdu Ebyte Electronic Technology Co., Ltd

# 10 Related product

| Model NO. | RF IC | Frequency Hz | TX POWER dBm | Interface | Protocol BLE | Size mm | Antenna | Function |
|---|---|---|---|---|---|---|---|---|
| E72-2G4M05S1B | CC2640 | 2.4G | 5 | I/O | 4.2 | 17.5*28.7 | PCB/IPX | Hardware module, requires secondary development |
| E73-2G4M04S1A | nRF52810 | 2.4G | 4 | I/O | 4.2/5.0 | 17.5*28.7 | PCB/IPX | Hardware module, requires secondary development |
| E73-2G4M04S1B | nRF52832 | 2.4G | 4 | I/O | 4.2/5.0 | 17.5*28.7 | PCB/IPX | Hardware module, requires secondary development |
| E73-2G4M08S1C | nRF52840 | 2.4G | 8 | I/O | 4.2/5.0 | 13*18 | PCB/IPX | Hardware module, requires secondary development |
| E73-2G4M04S1D | nRF51822 | 2.4G | 4 | I/O | 4.2 | 17.5*28.7 | PCB/IPX | Hardware module, requires secondary development |
| E104-BT01 | CC2541 | 2.4G | 0 | I/O | 4.0 | 14*22 | PCB | Hardware module, requires secondary development |
| E104-BT02 | DA14580 | 2.4G | 0 | TTL | 4.2 | 14*22 | PCB | Ultra-low power High speed, sniff |
| E72-2G4M04S2B | CC2640 | 2.4G | 2 | TTL | 4.2 | 14*23 | PCB/IPX | Built-in ARM dual core Multiple role |
| E104-2G4U04A | CC2540 | 2.4G | 0 | USB | 4.0 | 18*59 | PCB | Dongle Protocol Analyzer |
| E104-BT5010A | nRF52810 | 2.4G | 0 | UART | 5.0 | 11.5 * 16 | ceramic antenna | Low power, transparent transmission |



Copyright ©2012–2019，Chengdu Ebyte Electronic Technology Co., Ltd

# 11 Package for bulk order

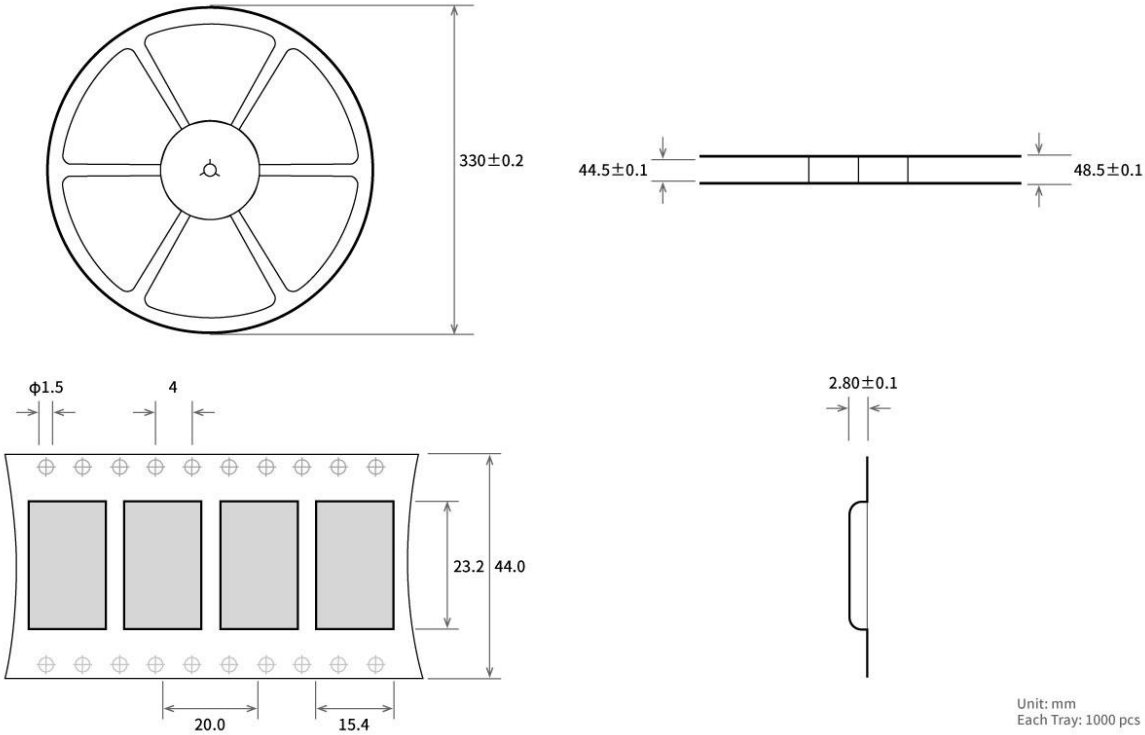




Copyright ©2012–2019，Chengdu Ebyte Electronic Technology Co., Ltd

# Reversion History

| Version | Edit date | Description | Issued by |
|---|---|---|---|
| 1.0 | 2019-5-9 | Initial version | huaa |
| 1.1 | 2019-7-30 | Format modification | Lyl |
| 1.2 | 2022-08-31 | Error correction | Bin |
| 1.3 | 2022-09-28 | Error correction | Bin |
| 1.4 | 2022-12-28 | Error correction | Bin |
| 1.5 | 2024-01-13 | Error correction | Bin |
| 1.6 | 2024-01-16 | Error correction | Bin |

# About Us

Technical support: support@cdebyte.com
Documents and RF Setting download link:：https://www.cdebyte.com
Thank you for using Ebyte products! Please contact us with any questions or suggestions: info@cdebyte.com
Web: https://www.cdebyte.com
Address: B5 Mould Park, 199# Xiqu Ave, High-tech District, Sichuan, China

Chengdu Ebyte Electronic Technology Co.,Ltd.



Copyright ©2012–2019，Chengdu Ebyte Electronic Technology Co., Ltd