PIC32CM MC00 Family

5-Volt Motor Control MCU

5-Volt, 128-KB Flash, 16-KB SRAM with Advanced Analog

Operating Conditions

- 2.7V – 5.5V, -40°C to +85°C, DC to 48 MHz

Core: Arm® Cortex®-M0+ CPU running at up to 48 MHz

- Single-cycle hardware multiplier
- Memory Protection Unit (MPU)

Memories

- Up to 128 KB in-system self-programmable Flash
- Up to 4 KB independent self-programmable Flash for Data Flash
- Up to 16 KB SRAM main memory

System

- Power-on Reset (POR) and Brown-out Detection (BOD)
- Internal and external clock options with 48 MHz to 96 MHz Fractional Digital Phase Locked Loop (FDPLL96M)
- External Interrupt Controller (EIC)
- One non-maskable interrupt

Low Power

- Idle and Standby sleep modes
- SleepWalking peripherals

Input/Output (I/O)

- Up to 38 programmable I/O pins
- Up to 16 external interrupts
- Up to two parallel Input/Output Controllers (PIO)

Debugger Development Support

- In-circuit and in-application programming
- 2-wire Serial Wire Debug Port Interface
- Four hardware breakpoints, two data watchpoints
- Micro Trace Buffer (MTB) for instruction trace in SRAM

Motor Control

- Two 24-bit Timer/Counters and one 16-bit Timer/Counter for Control (TCC) with extended functions:
  - Up to four compare channels with optional complementary output
  - Generation of synchronized pulse width modulation (PWM) pattern across port pins
  - Deterministic fault protection, fast decay and configurable dead-time between complementary output
  - Dithering that increase resolution with up to 5 bit and reduce quantization error
  - Up to 8 waveform output channels

Advanced Analog

- Two 12-bit, 1 Msps Analog-to-Digital Converter (ADC)
  - Differential and single-ended input
  - Automatic offset and gain error compensation
  - Oversampling and decimation in hardware to support 13-bit, 14-bit, 15-bit or 16-bit resolution
- One 16-bit Sigma-Delta Analog-to-Digital Converter (SDADC)
  - 2 differential channels
- One 10-bit, 350 ksps Digital-to-Analog Converter (DAC)
- Two Analog Comparators (AC) with Window Compare function

Peripherals

- Hardware Divide and Square Root Accelerator (DIVAS)
- 12-channel Direct Memory Access Controller (DMAC)
- 12-channel Event System
- Up to five 16-bit Timer/Counters (TC)
  - One 16-bit TC with compare/capture channels
  - One 8-bit TC with compare/capture channels
  - One 32-bit TC with compare/capture channels using two TCs
- Frequency Meter
- 32-bit Real Time Counter (RTC) with clock/calendar function
- Watchdog Timer (WDT)

Peripherals (Continued)

- CRC-32 generator
- Up to four Serial Communication Interfaces (SERCOM), each configurable to operate as:
  - USART with full-duplex and single-wire half-duplex configuration
  - I^2C up to 3.4 MHz
  - SPI
  - LIN master/slave
  - RS-485
- Configurable Custom Logic (CCL)
- Integrated Temperature Sensor

Table 1. Packages

Type	TQFP		VQFN	
Pin Count	32	48	32	48
I/O Pins (max)	26	38	26	38
Lead Pitch (mm)	0.8	0.5	0.5	0.5
Dimensions (mm)	7.0x7.0x1.0	7.0x7.0x1.0	5.0x5.0x0.9	7.0x7.0x0.9

© 2020 Microchip Technology Inc.

Table of Contents

5-Volt, 128-KB Flash, 16-KB SRAM with Advanced Analog 1

1. Configuration Summary 11
2. Ordering Information 13
3. Block Diagram 14
4. Pinout and Packaging 15
   - 4.1. 32-pin VQFN/32-pin TQFP 15
   - 4.2. 32-pin VQFN/32-pin TQFP Pinout and Multiplexing 16
   - 4.3. 48-pin VQFN/48-pin TQFP 20
   - 4.4. 48-pin VQFN/48-pin TQFP Pinout and Multiplexing 21
5. Signal Description 25
6. Power Supply and Start-Up Considerations 27
   - 6.1. Power Domain Overview 27
   - 6.2. Power Supply Considerations 27
   - 6.3. Power-Up 28
   - 6.4. Power-on Reset (POR) and Brown-out Detector (BOD) 28
7. Product Mapping 30
8. Memories 31
   - 8.1. Embedded Memories 31
   - 8.2. Physical Memory Map 31
   - 8.3. NVM User Row Mapping 31
   - 8.4. NVM Software Calibration Area Mapping 32
   - 8.5. NVM Temperature Calibration Area Mapping 33
   - 8.6. Serial Number 33
9. Processor and Architecture 34
   - 9.1. Cortex M0+ Processor 34
   - 9.2. Nested Vector Interrupt Controller 35
   - 9.3. Micro Trace Buffer 37
   - 9.4. High-Speed Bus System 38
10. Peripherals Configuration Summary 41
11. Clock System 44
   - 11.1. Clock Distribution 44
   - 11.2. Synchronous and Asynchronous Clocks 45
   - 11.3. Register Synchronization 45
   - 11.4. Enabling a Peripheral 46
   - 11.5. On-demand, Clock Requests 47
   - 11.6. Power Consumption vs. Speed 47
   - 11.7. Clocks after Reset 47
12. Generic Clock Controller (GCLK) 49

12.1. Overview....49
12.2. Features....49
12.3. Block Diagram....49
12.4. Signal Description....50
12.5. Peripheral Dependencies....50
12.6. Functional Description....50
12.7. Register Summary....55

13. Main Clock (MCLK)....64
13.1. Overview....64
13.2. Features....64
13.3. Block Diagram....64
13.4. Peripheral Dependencies....64
13.5. Functional Description....65
13.6. Register Summary....67

14. Oscillators Controller (OSCCTRL)....80
14.1. Overview....80
14.2. Features....80
14.3. Block Diagram....80
14.4. Signal Description....81
14.5. Peripheral Dependencies....81
14.6. Functional Description....81
14.7. Register Summary....89

15. 32.768 kHz Oscillators Controller (OSC32KCTRL)....114
15.1. Overview....114
15.2. Features....114
15.3. Block Diagram....115
15.4. Signal Description....115
15.5. Peripheral Dependencies....115
15.6. Functional Description....116
15.7. Register Summary....121

16. Power Manager (PM)....134
16.1. Overview....134
16.2. Features....134
16.3. Block Diagram....134
16.4. Peripheral Dependencies....134
16.5. Functional Description....134
16.6. Register Summary....138

17. Supply Controller (SUPC)....141
17.1. Overview....141
17.2. Features....141
17.3. Block Diagram....142
17.4. Peripheral Dependencies....142
17.5. Functional Description....142
17.6. Register Summary....146

18. Reset Controller (RSTC)..... 155
18.1. Overview..... 155
18.2. Features..... 155
18.3. Block Diagram..... 155
18.4. Signal Description..... 155
18.5. Peripheral Dependencies..... 155
18.6. Functional Description..... 156
18.7. Register Summary..... 157

19. Peripheral Access Controller (PAC)..... 159
19.1. Overview..... 159
19.2. Features..... 159
19.3. Block Diagram..... 159
19.4. Peripheral Dependencies..... 159
19.5. Functional Description..... 159
19.6. Register Summary..... 162

20. Device Service Unit (DSU)..... 177
20.1. Overview..... 177
20.2. Features..... 177
20.3. Block Diagram..... 177
20.4. Signal Description..... 178
20.5. Peripheral Dependencies..... 178
20.6. Debug Operation..... 178
20.7. Chip Erase..... 180
20.8. Programming..... 180
20.9. Intellectual Property Protection..... 181
20.10. Device Identification..... 182
20.11. Functional Description..... 183
20.12. Register Summary..... 187

21. Divide and Square Root Accelerator (DIVAS)..... 212
21.1. Overview..... 212
21.2. Features..... 212
21.3. Block Diagram..... 212
21.4. Peripheral Dependencies..... 212
21.5. Functional Description..... 212
21.6. Register Summary..... 215

22. Watchdog Timer (WDT)..... 223
22.1. Overview..... 223
22.2. Features..... 223
22.3. Block Diagram..... 223
22.4. Peripheral Dependencies..... 224
22.5. Functional Description..... 224
22.6. Register Summary..... 228

23. Real-Time Counter (RTC)..... 237
23.1. Overview..... 237

23.2. Features....237
23.3. Block Diagram....237
23.4. Peripheral Dependencies....238
23.5. Functional Description....238
23.6. Register Summary - Mode 0 - 32-Bit Counter....244
23.7. Register Summary - Mode 1 - 16-Bit Counter....258
23.8. Register Summary - Mode 2 - Clock/Calendar....273

24. Direct Memory Access Controller (DMAC)....288
24.1. Overview....288
24.2. Features....288
24.3. Block Diagram....289
24.4. Peripheral Dependencies....290
24.5. Functional Description....290
24.6. Register Summary....308
24.7. Register Summary - SRAM....336

25. External Interrupt Controller (EIC)....343
25.1. Overview....343
25.2. Features....343
25.3. Block Diagram....343
25.4. Signal Description....343
25.5. Peripheral Dependencies....344
25.6. Functional Description....344
25.7. Register Summary....349

26. Nonvolatile Memory Controller (NVMCTRL)....360
26.1. Overview....360
26.2. Features....360
26.3. Block Diagram....360
26.4. Peripheral Dependencies....361
26.5. Functional Description....361
26.6. Register Summary....368

27. I/O Pin Controller (PORT)....383
27.1. Overview....383
27.2. Features....383
27.3. Block Diagram....384
27.4. Signal Description....384
27.5. Peripheral Dependencies....384
27.6. Functional Description....385
27.7. Register Summary....391

28. Event System (EVSYS)....410
28.1. Overview....410
28.2. Features....410
28.3. Block Diagram....410
28.4. Peripheral Dependencies....411
28.5. Functional Description....411

28.6. Register Summary....415

29. Serial Communication Interface (SERCOM)....427
29.1. Overview....427
29.2. Features....427
29.3. Block Diagram....427
29.4. Signal Description....428
29.5. Peripheral Dependencies....428
29.6. Functional Description....428

30. SERCOM Synchronous and Asynchronous Receiver and Transmitter (SERCOM USART)....434
30.1. Overview....434
30.2. USART Features....434
30.3. Block Diagram....435
30.4. Signal Description....435
30.5. Peripheral Dependencies....435
30.6. Functional Description....435
30.7. Register Summary....447

31. SERCOM Serial Peripheral Interface (SERCOM SPI)....467
31.1. Overview....467
31.2. Features....467
31.3. Block Diagram....467
31.4. Signal Description....468
31.5. Peripheral Dependencies....468
31.6. Functional Description....468
31.7. Register Summary....476

32. SERCOM Inter-Integrated Circuit (SERCOM I^2C)....491
32.1. Overview....491
32.2. Features....491
32.3. Block Diagram....492
32.4. Signal Description....492
32.5. Peripheral Dependencies....492
32.6. Functional Description....492
32.7. Register Summary - I2C Slave....509
32.8. Register Summary - I2C Master....523

33. Timer Counter (TC)....540
33.1. Overview....540
33.2. Features....540
33.3. Block Diagram....541
33.4. Signal Description....541
33.5. Peripheral Dependencies....542
33.6. Functional Description....542
33.7. Register Summary - 8-bit Mode....556
33.8. Register Summary - 16-bit Mode....578
33.9. Register Summary - 32-bit Mode....597

34. Timer/Counter for Control (TCC) Applications 616
34.1. Overview 616
34.2. Features 616
34.3. Block Diagram 617
34.4. Signal Description 617
34.5. Peripheral Dependencies 618
34.6. Functional Description 618
34.7. Register Summary 650

35. Configurable Custom Logic (CCL) 690
35.1. Overview 690
35.2. Features 690
35.3. Block Diagram 691
35.4. Signal Description 691
35.5. Peripheral Dependencies 691
35.6. Functional Description 691
35.7. Register Summary 702

36. Analog-to-Digital Converter (ADC) 707
36.1. Overview 707
36.2. Features 707
36.3. Block Diagram 708
36.4. Signal Description 708
36.5. Peripheral Dependencies 708
36.6. Functional Description 709
36.7. Register Summary 720

37. Sigma-Delta Analog-to-Digital Converter (SDADC) 747
37.1. Overview 747
37.2. Features 747
37.3. Block Diagram 748
37.4. Signal Description 748
37.5. Peripheral Dependencies 749
37.6. Functional Description 749
37.7. Register Summary 755

38. Analog Comparators (AC) 779
38.1. Overview 779
38.2. Features 779
38.3. Block Diagram 780
38.4. Signal Description 780
38.5. Peripheral Dependencies 780
38.6. Functional Description 781
38.7. Register Summary 789

39. Digital-to-Analog Converter (DAC) 805
39.1. Overview 805
39.2. Features 805
39.3. Block Diagram 805

39.4. Signal Description ... 805
39.5. Peripheral Dependencies ... 805
39.6. Functional Description ... 806
39.7. Register Summary ... 810

40. Temperature Sensor (TSENS) ... 822
40.1. Overview ... 822
40.2. Features ... 822
40.3. Block Diagram ... 822
40.4. Peripheral Dependencies ... 822
40.5. Functional Description ... 823
40.6. Register Summary ... 826

41. Frequency Meter (FREQM) ... 843
41.1. Overview ... 843
41.2. Features ... 843
41.3. Block Diagram ... 843
41.4. Peripheral Dependencies ... 843
41.5. Functional Description ... 843
41.6. Register Summary ... 846

42. Position Decoder (PDEC) ... 856
42.1. Overview ... 856
42.2. Features ... 856
42.3. Block Diagram ... 857
42.4. Signal Description ... 857
42.5. Peripheral Dependencies ... 857
42.6. Functional Description ... 858
42.7. Register Summary ... 869

43. Electrical Characteristics ... 892
43.1. Operating Frequencies and Thermal Limitations ... 892
43.2. Power Supply ... 893
43.3. CPU Active Power ... 896
43.4. CPU Idle Power ... 897
43.5. CPU Standby Power ... 898
43.6. Peripheral Active Current ... 899
43.7. Wake-up Timing ... 902
43.8. I/O Pin Electrical Specifications ... 903
43.9. Internal Voltage Reference Specifications ... 905
43.10. Maximum Clock Frequencies Electrical Specifications ... 906
43.11. External Crystal Oscillator and Clock (XOSC) Electrical Specifications ... 906
43.12. External 32kHz Crystal Oscillator (XOSC32K) Electrical Specifications ... 909
43.13. Internal 32.768 kHz RC Oscillator (OSC32K) ... 911
43.14. Internal 48MHz RC Oscillator (OSC48M) ... 911
43.15. Ultra Low Power internal 32kHz RC Oscillator (OSCULP32K) ... 911
43.16. Fractional Digital Phase Locked Loop (FDPLL96M) ... 912
43.17. Digital-to-Analog Converter (DAC) Electrical Specifications ... 912
43.18. Analog to Digital Converter (ADC) Electrical Specifications ... 914

43.19. Sigma-Delta Analog to Digital Converter (SDADC) Electrical Specifications....923
43.20. Temperature Sensor (TSENS) Electrical Specifications....925
43.21. Analog Comparator (AC) Electrical Specifications....926
43.22. Serial Peripheral Interface (SERCOM SPI) Mode Electrical Specifications....927
43.23. SERCOM Universal Synchronous and Asynchronous Receiver and Transmitter (SERCOM USART)....930
43.24. SERCOM Inter-Integrated Circuit (SERCOM I^2C) Electrical Specifications....931
43.25. Timer Counter (TC) Module Electrical Specifications....936
43.26. Timer/Counter for Control (TCC) Applications Electrical Specifications....937
43.27. Frequency Meter (FREQM) Electrical Specifications....938
43.28. Flash NVM Electrical Specifications....939
43.29. Position Decoder (PDEC) Electrical Specifications....940

44. Packaging Information....941
44.1. Package Marking Information....941
44.2. Package Drawings....941
44.3. Soldering Profile....957

45. Schematic Checklist....958
45.1. Introduction....958
45.2. Operation in Noisy Environment....958
45.3. Power Supply....958
45.4. External Analog Reference Connections....961
45.5. External Reset Circuit....962
45.6. Unused or Unconnected Pins....963
45.7. Clocks and Crystal Oscillators....964
45.8. Programming and Debug Ports....966

46. Revision History....969

The Microchip Website....975

Product Change Notification Service....975

Customer Support....975

Microchip Devices Code Protection Feature....975

Legal Notice....976

Trademarks....976

Quality Management System....977

Worldwide Sales and Service....978

1. Configuration Summary

Table 1-1. PIC32CM MC Device-Specific Features

Device	Flash (KB)	SRAM (KB)	Pins	Package	DMA Channels	Event System Channels	EIC	ADC Channels	AC	DAC	SERCOM	TC	TC Waveform Outputs	TCC	TCC Waveform Outputs	CCL	PDEC	Temperature Sensor
PIC32CM1216MC00032	128	16	32	TQFP/VQFN	12	12	16	10	2	Y	4	3	2	3	8/4/2	4	Y	Y
PIC32CM6408MC00032	64	8																
PIC32CM1216MC00048	128	16	48					14				5						
PIC32CM6408MC00048	64	8																

Table 1-2. PIC32CM MC00 Common Features

PIC32CM MC00	
Maximum CPU frequency	48 MHz
Memory Protection Unit	8 regions
Systick timer	1
Serial Wire Debug Interface	Yes
Oscillators	32.768 kHz crystal oscillator (XOSC32K)
	0.4-32 MHz crystal oscillator (XOSC)
	32.768 kHz internal oscillator (OSC32K)
	32.768 kHz ultra low-power internal oscillator (OSCULP32K)
	48 MHz high-accuracy internal oscillator (OSC48M)
	96 MHz Fractional Digital Phased Locked Loop (FDPLL96M)
Generic Clock (GCLK)	9
DMA channels	12
Event System channels	12
External Interrupt lines	16 + 1 non-maskable
Divide and Square Root Accelerator (DIVAS)	Yes
Waveform outputs/Capture inputs channels per TC instance	2
TC Maximum and Minimum Capture	Yes
Timer Counter for Control (TCC) instances	3
Waveform output channels per TCC	8 for TCC0, 4 for TCC1, 2 for TCC2
Configurable Custom Logic (CCL) (number of LUTs)	4
Analog-to-Digital Converter (ADC) instances	2
Sigma-Delta Analog-to-Digital Converter (SDADC) instances	1

© 2020 Microchip Technology Inc.

.....continued	
PIC32CM MC00	
Analog Comparators (AC)	1 AC made of 2 Comparators
Digital-to-Analog Converter (DAC) channels	1
Real-Time Counter (RTC)	Yes
RTC alarms	1
RTC compare values	One 32-bit value or two 16-bit values
Frequency Meter (FREQM) reference clock divider	Yes
Watchdog Timer (WDT)	Yes
Position Decoder (PDEC)	Yes
Memories CRC32 computation (DSU)	Yes (SRAM, Flash, Data Flash)
Brown-out Detection (BOD)	VDD, VDDCORE

2. Ordering Information

Figure 2-1. PIC32CM MC Family Ordering Information

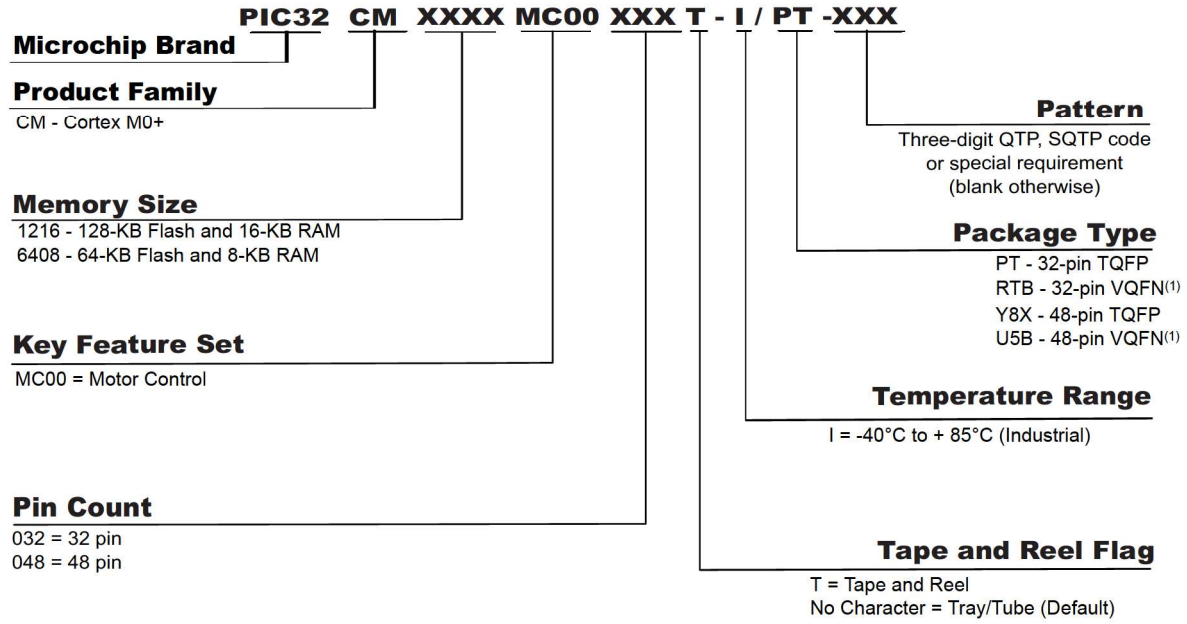

Note:

1. VQFN packages have wettable flanks.

3. Block Diagram

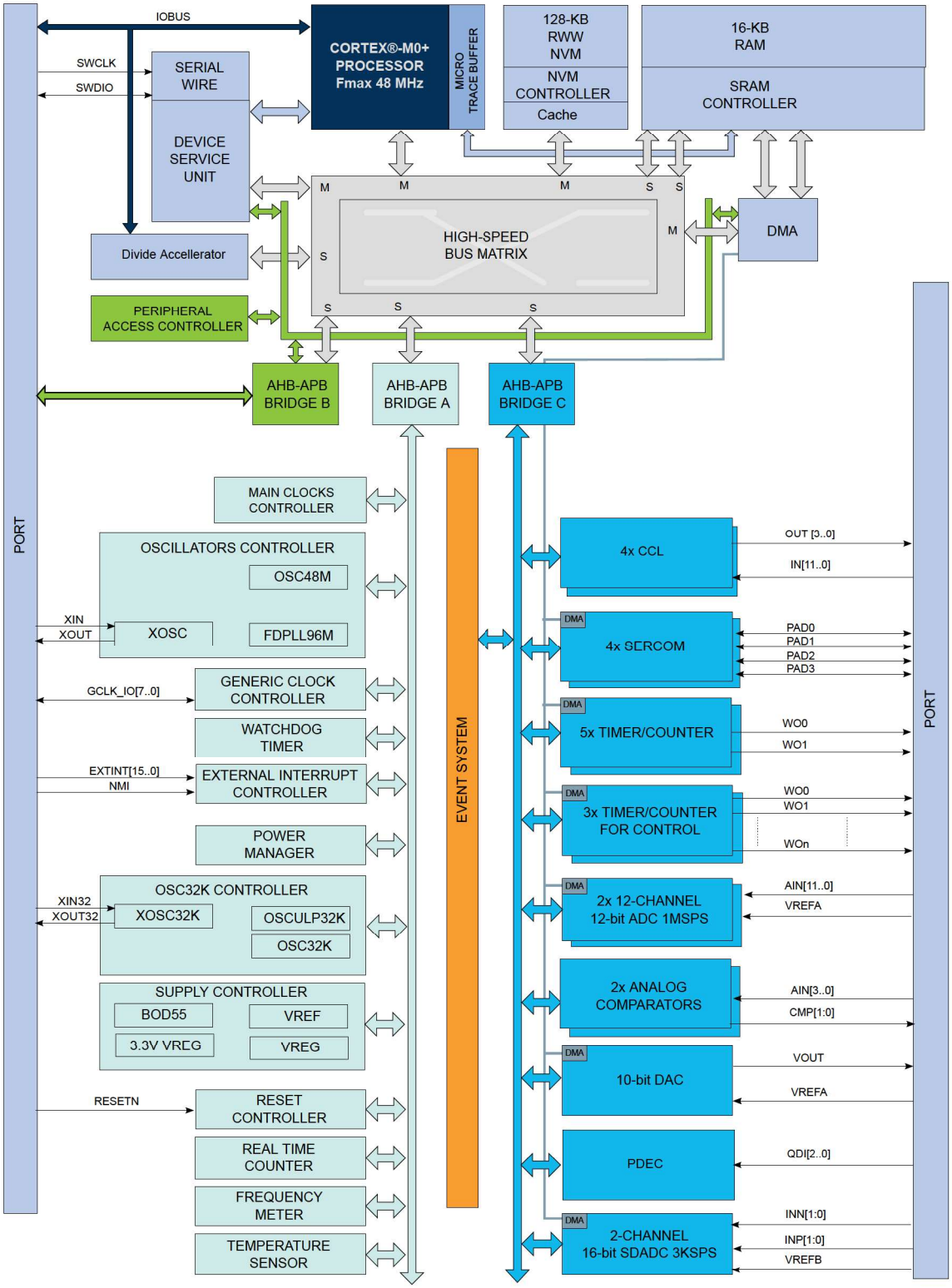

4. Pinout and Packaging

Each pin is controlled by the I/O Pin Controller (PORT) as a general purpose I/O and alternatively can be assigned to one of the peripheral functions: A, B, C, D, E, F, G, H, I, or J.

The following tables describe the peripheral signals multiplexed to the PORT I/O pins for each package.

The column “Reset State” indicates the reset state of the line with mnemonics:

- "I/O" or "Function" indicates whether the I/O pin resets in I/O mode or in peripheral function mode.
- “I” / ”O” / "Hi-Z" indicates whether the I/O is configured as an input, output or is tri-stated.
- “PU” / “PD” indicates whether pull up, pull down or nothing is enabled.

Note: The schematic checklist chapter provides the user with the requirements regarding the different pin connections that must be considered before starting any new board design, and information on the minimum hardware resources required to develop an application.

4.1 32-pin VQFN/32-pin TQFP

	32-pin VQFN Top View	32-pin TQFP Top View
PIC32CM1216MC00032 PIC32CM6408MC00032	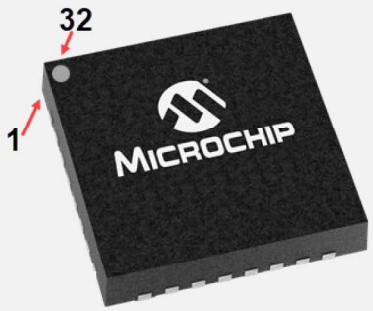	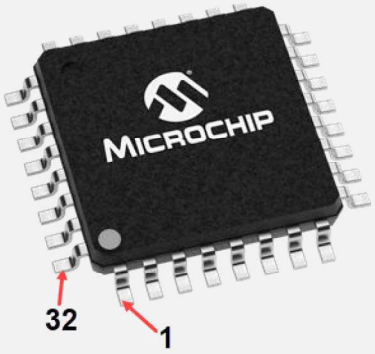

4.2 32-pin VQFN/32-pin TQFP Pinout and Multiplexing

32-pin QFP	Pin name	A	B							C	D	E	F	G	H	I	J	Supply	Reset State
		EIC	REF	ADC0	ADC1	SDADC	AC	DAC		SERCOM	SERCOM-ALT	TC/TCC	TCC	PDEC	AC/ GCLK	CCL	CCL/PDEC		
1	PA00/ XIN32	EXTINT[0]									SERCOM1/ PAD[0]	TCC2/ WO[0]						VDDANA	I/O, HI-Z
2	PA01/ XOUT32	EXTINT[1]									SERCOM1/ PAD[1]	TCC2/ WO[1]						VDDANA	I/O, HI-Z
3	PA02	EXTINT[2]		AIN[0]				VOUT										VDDANA	I/O, HI-Z
4	PA03	EXTINT[3]	VREFA	AIN[1]														VDDANA	I/O, HI-Z
5	PA04	EXTINT[4]	VREFB	AIN[4]			AIN[0]				SERCOM0/ PAD[0]	TCC0/ WO[0]				CCL/ IN[0]		VDDANA	I/O, HI-Z
6	PA05	EXTINT[5]		AIN[5]			AIN[1]				SERCOM0/ PAD[1]	TCC0/ WO[1]				CCL/ IN[1]		VDDANA	I/O, HI-Z
7	PA06	EXTINT[6]		AIN[6]		INN[0]	AIN[2]				SERCOM0/ PAD[2]	TCC1/ WO[0]				CCL/ IN[2]		VDDANA	I/O, HI-Z
8	PA07	EXTINT[7]		AIN[7]		INP[0]	AIN[3]				SERCOM0/ PAD[3]	TCC1/ WO[1]				CCL/ OUT[0]	CCL/ OUT[3]	VDDANA	I/O, HI-Z
9	VDDANA																	VDDANA	
10	GNDANA																	GNDANA	
11	PA08(1)	NMI		AIN[8]	AIN[10]					SERCOM0/ PAD[0]	SERCOM2/ PAD[0]	TCC0/ WO[0]	TCC1/ WO[2]			CCL/ IN[3]	PDEC[0]	VDDIO	I/O, HI-Z

continued

32-pin QFP	Pin name	A	B						C	D	E	F	G	H	I	J		
		EIC	REF	ADC0	ADC1	SDADC	AC	DAC	SERCOM	SERCOM-ALT	TC/TCC	TCC	PDEC	AC/ GCLK	CCL	CCL/PDEC	Supply	Reset State
12	PA09(1)	EXTINT[9]		AIN[9]	AIN[11]				SERCOM0/ PAD[1]	SERCOM2/ PAD[1]	TCC0/ WO[1]	TCC1/ WO[3]			CCL/ IN[4]	PDEC[1]	VDDIO	I/O, HI-Z
13	PA10(2)	EXTINT[10]		AIN[10]					SERCOM0/ PAD[2]	SERCOM2/ PAD[2]	TCC1/ WO[0]	TCC0/ WO[2]		GCLK/ IO[4]	CCL/ IN[5]	PDEC[2]	VDDIO	I/O, HI-Z
14	PA11(2)	EXTINT[11]		AIN[11]					SERCOM0/ PAD[3]	SERCOM2/ PAD[3]	TCC1/ WO[1]	TCC0/ WO[3]		GCLK/ IO[5]	CCL/ OUT[1]		VDDIO	I/O, HI-Z
15	PA14/ XIN	EXTINT[14]							SERCOM2/ PAD[2]		TC4/ WO[0]	TCC0/ WO[4]		GCLK/ IO[0]			VDDIO	I/O, HI-Z
16	PA15/ XOUT	EXTINT[15]							SERCOM2/ PAD[3]		TC4/ WO[1]	TCC0/ WO[5]		GCLK/ IO[1]			VDDIO	I/O, HI-Z
17	PA16(1)	EXTINT[0]							SERCOM1/ PAD[0]	SERCOM3/ PAD[0]	TCC2/ WO[0]	TCC0/ WO[6]	PDEC/ QDI[0]	GCLK/ IO[2]	CCL/ IN[0]		VDDIO	I/O, HI-Z
18	PA17(1)	EXTINT[1]							SERCOM1/ PAD[1]	SERCOM3/ PAD[1]	TCC2/ WO[1]	TCC0/ WO[7]	PDEC/ QDI[1]	GCLK/ IO[3]	CCL/ IN[1]		VDDIO	I/O, HI-Z
19	PA18	EXTINT[2]							SERCOM1/ PAD[2]	SERCOM3/ PAD[2]	TC4/ WO[0]	TCC0/ WO[2]	PDEC/ QDI[2]	AC/ CMP[0]	CCL/ IN[2]		VDDIO	I/O, HI-Z
20	PA19	EXTINT[3]							SERCOM1/ PAD[3]	SERCOM3/ PAD[3]	TC4/ WO[1]	TCC0/ WO[3]		AC/ CMP[1]	CCL/ OUT[0]		VDDIO	I/O, HI-Z
21	PA22(1)	EXTINT[6]							SERCOM3/ PAD[0]		TC0/ WO[0]	TCC0/ WO[4]		GCLK/ IO[6]	CCL/ IN[6]		VDDIO	I/O, HI-Z

.....continued

32-pin QFP	Pin name	A	B						C	D	E	F	G	H	I	J	Supply	Reset State
		EIC	REF	ADC0	ADC1	SDADC	AC	DAC	SERCOM	SERCOM-ALT	TC/TCC	TCC	PDEC	AC/ GCLK	CCL	CCL/PDEC		
22	PA23(1)	EXTINT[7]							SERCOM3/ PAD[1]		TC0/ WO[1]	TCC0/ WO[5]		GCLK/ IO[7]	CCL/ IN[7]		VDDIO	I/O, HI-Z
23	PA24	EXTINT[12]							SERCOM3/ PAD[2]		TC1/ WO[0]	TCC1/ WO[2]			CCL/ IN[8]		VDDIO	I/O, HI-Z
24	PA25	EXTINT[13]							SERCOM3/ PAD[3]		TC1/ WO[1]	TCC1/ WO[3]			CCL/ OUT[2]		VDDIO	I/O, HI-Z
25	PA27	EXTINT[15]												GCLK/ IO[0]		CCL/ IN[10]	VDDIN	I/O, HI-Z
26	RESET_N(3)																VDDIN	I, PU
27	PA28	EXTINT[8]												GCLK/ IO[0]		CCL/ IN[11]	VDDIN	I/O, HI-Z
28	GND																GND	
29	VDDCORE																	
30	VDDIN																VDDIN	
31	PA30/ SWCLK	EXTINT[10]								SERCOM1/ PAD[2]	TCC1/ WO[0]		SWCLK	GCLK/ IO[0]	CCL/ IN[3]		VDDIN	I/O, HI-Z
32	PA31/ SWDIO	EXTINT[11]								SERCOM1/ PAD[3]	TCC1/ WO[1]				CCL/ OUT[1]		VDDIN	I/O, HI-Z

.....continued

32-pin QFP	Pin name	A	B					C	D	E	F	G	H	I	J	Supply	Reset State
		EIC	REF	ADC0	ADC1	SDADC	AC	DAC	SERCOM	SERCOM-ALT	TC/TCC	TCC	PDEC	AC/ GCLK	CCL	CCL/PDEC	

Notes:

1. PA08, PA09, PA16, PA17, PA22, PA23 are TWIHS pins and have the same properties as standard pins when not used as SERCOM I^2C pins. Refer to the Electrical Characteristics section for additional information.
2. PA10, PA11 are high-sink pins and have different properties than all other GPIO. Refer to the electrical characteristics section for additional information.
3. The RESET# pin has the same properties as standard GPIO.

4.3 48-pin VQFN/48-pin TQFP

	48-pin VQFN Top View	48-pin TQFP Top View
PIC32CM1216MC00048 PIC32CM6408MC00048	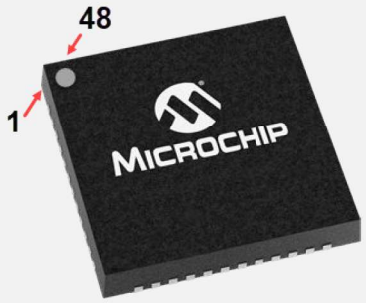	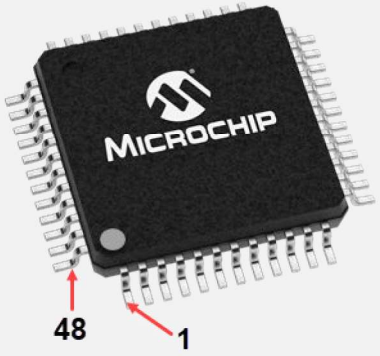

4.4 48-pin VQFN/48-pin TQFP Pinout and Multiplexing

48-pin QFN	Pin name	A	B						C	D	E	F	G	H	I	J	Supply	Reset State
		EIC	REF	ADC0	ADC1	SDADC	AC	DAC	SERCOM	SERCOM-ALT	TC/TCC	TCC	PDEC	AC/ GCLK	CCL	CCL/PDEC		
1	PA00/ XIN32	EXTINT[0]								SERCOM1/ PAD[0]	TCC2/ WO[0]						VDDANA	I/O, HI-Z
2	PA01/ XOUT32	EXTINT[1]								SERCOM1/ PAD[1]	TCC2/ WO[1]						VDDANA	I/O, HI-Z
3	PA02	EXTINT[2]		AIN[0]				VOUT									VDDANA	I/O, HI-Z
4	PA03	EXTINT[3]	VREFA	AIN[1]													VDDANA	I/O, HI-Z
5	GNDANA																GNDANA	
6	VDDANA																VDDANA	
7	PB08	EXTINT[8]		AIN[2]	AIN[4]	INN[1]					TC0/ WO[0]				CCL/ IN[8]		VDDANA	I/O, HI-Z
8	PB09	EXTINT[9]		AIN[3]	AIN[5]	INP[1]					TC0/ WO[1]				CCL/ OUT[2]		VDDANA	I/O, HI-Z
9	PA04	EXTINT[4]	VREFB	AIN[4]			AIN[0]			SERCOM0/ PAD[0]	TCC0/ WO[0]				CCL/ IN[0]		VDDANA	I/O, HI-Z
10	PA05	EXTINT[5]		AIN[5]			AIN[1]			SERCOM0/ PAD[1]	TCC0/ WO[1]				CCL/ IN[1]		VDDANA	I/O, HI-Z
11	PA06	EXTINT[6]		AIN[6]		INN[0]	AIN[2]			SERCOM0/ PAD[2]	TCC1/ WO[0]				CCL/ IN[2]		VDDANA	I/O, HI-Z
12	PA07	EXTINT[7]		AIN[7]		INP[0]	AIN[3]			SERCOM0/ PAD[3]	TCC1/ WO[1]				CCL/ OUT[0]	CCL/ OUT[3]	VDDANA	I/O, HI-Z
13	PA08(1)	NMI		AIN[8]	AIN[10]				SERCOM0/ PAD[0]	SERCOM2/ PAD[0]	TCC0/ WO[0]	TCC1/ WO[2]			CCL/ IN[3]	PDEC[0]	VDDIO	I/O, HI-Z
14	PA09(1)	EXTINT[9]		AIN[9]	AIN[11]				SERCOM0/ PAD[1]	SERCOM2/ PAD[1]	TCC0/ WO[1]	TCC1/ WO[3]			CCL/ IN[4]	PDEC[1]	VDDIO	I/O, HI-Z
15	PA10(2)	EXTINT[10]		AIN[10]					SERCOM0/ PAD[2]	SERCOM2/ PAD[2]	TCC1/ WO[0]	TCC0/ WO[2]		GCLK/ IO[4]	CCL/ IN[5]	PDEC[2]	VDDIO	I/O, HI-Z

.....continued

48-pin QFN	Pin name	A	B						C	D	E	F	G	H	I	J		
		EIC	REF	ADC0	ADC1	SDADC	AC	DAC	SERCOM	SERCOM-ALT	TC/TCC	TCC	PDEC	AC/ GCLK	CCL	CCL/PDEC	Supply	Reset State
16	PA11(2)	EXTINT[11]		AIN[11]					SERCOM0/ PAD[3]	SERCOM2/ PAD[3]	TCC1/ WO[1]	TCC0/ WO[3]		GCLK/ IO[5]	CCL/ OUT[1]		VDDIO	I/O, HI-Z
17	VDDIO																VDDIO	
18	GND																GND	
19	PB10(2)	EXTINT[10]									TC1/ WO[0]	TCC0/ WO[4]		GCLK/ IO[4]	CCL/ IN[5]		VDDIO	I/O, HI-Z
20	PB11(2)	EXTINT[11]									TC1/ WO[1]	TCC0/ WO[5]		GCLK/ IO[5]	CCL/ OUT[1]		VDDIO	I/O, HI-Z
21	PA12(1)	EXTINT[12]							SERCOM2/ PAD[0]		TCC2/ WO[0]	TCC0/ WO[6]		AC/ CMP[0]		CCL/ OUT[3]	VDDIO	I/O, HI-Z
22	PA13(1)	EXTINT[13]							SERCOM2/ PAD[1]		TCC2/ WO[1]	TCC0/ WO[7]		AC/ CMP[1]			VDDIO	I/O, HI-Z
23	PA14/ XIN	EXTINT[14]							SERCOM2/ PAD[2]		TC4/ WO[0]	TCC0/ WO[4]		GCLK/ IO[0]			VDDIO	I/O, HI-Z
24	PA15/ XOUT	EXTINT[15]							SERCOM2/ PAD[3]		TC4/ WO[1]	TCC0/ WO[5]		GCLK/ IO[1]			VDDIO	I/O, HI-Z
25	PA16(1)	EXTINT[0]							SERCOM1/ PAD[0]	SERCOM3/ PAD[0]	TCC2/ WO[0]	TCC0/ WO[6]	PDEC/ QDI[0]	GCLK/ IO[2]	CCL/ IN[0]		VDDIO	I/O, HI-Z
26	PA17(1)	EXTINT[1]							SERCOM1/ PAD[1]	SERCOM3/ PAD[1]	TCC2/ WO[1]	TCC0/ WO[7]	PDEC/ QDI[1]	GCLK/ IO[3]	CCL/ IN[1]		VDDIO	I/O, HI-Z
27	PA18	EXTINT[2]							SERCOM1/ PAD[2]	SERCOM3/ PAD[2]	TC4/ WO[0]	TCC0/ WO[2]	PDEC/ QDI[2]	AC/ CMP[0]	CCL/ IN[2]		VDDIO	I/O, HI-Z
28	PA19	EXTINT[3]							SERCOM1/ PAD[3]	SERCOM3/ PAD[3]	TC4/ WO[1]	TCC0/ WO[3]		AC/ CMP[1]	CCL/ OUT[0]		VDDIO	I/O, HI-Z
29	PA20	EXTINT[4]								SERCOM3/ PAD[2]	TC3/ WO[0]	TCC0/ WO[6]		GCLK/ IO[4]			VDDIO	I/O, HI-Z

.....continued

48-pin QFN	Pin name	A	B						C	D	E	F	G	H	I	J	Supply	Reset State
		EIC	REF	ADC0	ADC1	SDADC	AC	DAC	SERCOM	SERCOM-ALT	TC/TCC	TCC	PDEC	AC/ GCLK	CCL	CCL/PDEC		
30	PA21	EXTINT[5]								SERCOM3/ PAD[3]	TC3/ WO[1]	TCC0/ WO[7]		GCLK/ IO[5]		CCL/ IN[9]	VDDIO	I/O, HI-Z
31	PA22(1)	EXTINT[6]							SERCOM3/ PAD[0]		TC0/ WO[0]	TCC0/ WO[4]		GCLK/ IO[6]	CCL/ IN[6]		VDDIO	I/O, HI-Z
32	PA23(1)	EXTINT[7]							SERCOM3/ PAD[1]		TC0/ WO[1]	TCC0/ WO[5]		GCLK/ IO[7]	CCL/ IN[7]		VDDIO	I/O, HI-Z
33	PA24	EXTINT[12]							SERCOM3/ PAD[2]		TC1/ WO[0]	TCC1/ WO[2]			CCL/ IN[8]		VDDIO	I/O, HI-Z
34	PA25	EXTINT[13]							SERCOM3/ PAD[3]		TC1/ WO[1]	TCC1/ WO[3]			CCL/ OUT[2]		VDDIO	I/O, HI-Z
35	GND																GND	
36	VDDIO																VDDIO	
37	PB22	EXTINT[6]									TC3/ WO[0]			GCLK/ IO[0]	CCL/ IN[0]		VDDIO	I/O, HI-Z
38	PB23	EXTINT[7]									TC3/ WO[1]			GCLK/ IO[1]	CCL/ OUT[0]		VDDIO	I/O, HI-Z
39	PA27	EXTINT[15]												GCLK/ IO[0]		CCL/ IN[10]	VDDIN	I/O, HI-Z
40	RESET_N(3)																VDDIN	I, PU
41	PA28	EXTINT[8]												GCLK/ IO[0]		CCL/ IN[11]	VDDIN	I/O, HI-Z
42	GND																GND	
43	VDDCORE																	
44	VDDIN																VDDIN	
45	PA30/ SWCLK	EXTINT[10]								SERCOM1/ PAD[2]	TCC1/ WO[0]		SWCLK	GCLK/ IO[0]	CCL/ IN[3]		VDDIN	SWCLK, I, PU

.....continued

48-pin QFN	Pin name	A	B						C	D	E	F	G	H	I	J	Supply	Reset State
		EIC	REF	ADC0	ADC1	SDADC	AC	DAC	SERCOM	SERCOM-ALT	TC/TCC	TCC	PDEC	AC/ GCLK	CCL	CCL/PDEC		
46	PA31/ SWDIO	EXTINT[11]								SERCOM1/ PAD[3]	TCC1/ WO[1]				CCL/ OUT[1]		VDDIN	I/O, HI-Z
47	PB02	EXTINT[2]			AIN[2]						TC2/ WO[0]				CCL/ OUT[0]		VDDANA	I/O, HI-Z
48	PB03	EXTINT[3]			AIN[3]						TC2/ WO[1]						VDDANA	I/O, HI-Z

Notes:

1. PA08, PA09, PA12, PA13, PA16, PA17, PA22, PA23 are TWIHS pins and have the same properties as standard pins when not used as SERCOM I^2C pins. Refer to the Electrical Characteristics section for additional information.
2. PA10, PA11, PB10, PB11 are high-sink pins and have different properties than all other GPIO. Refer to the electrical characteristics section for additional information.
3. The RESET# pin has the same properties as standard GPIO.

5. Signal Description

The following tables provide the details on signal names classified by the peripheral.

Table 5-1. Signal Descriptions List

Signal Name	Function	Type
Analog Comparators (AC)		
AIN[3:0]	AC Analog Inputs	Analog Input
CMP[1:0]	AC Comparator Outputs	Digital Output
Analog-to- Digital Converter (ADCx)		
AIN[11:0]	ADC Analog Inputs	Analog Input
VREFA(1)	ADC Voltage External Reference A	Analog Input
Digital-to-Analog Converter (DAC)		
VOUT	DAC Voltage output	Analog Output
VREFA(1)	DAC Voltage External Reference A	Analog Input
Sigma-Delta Analog-to-Digital Converter (SDADC)		
INN[1:0]	SDADC Analog Negative Inputs	Analog Input
INP[1:0]	SDADC Analog Positive Inputs	Analog Input
VREFB	SDADC Voltage External Reference B	Analog Input
External Interrupt Controller (EIC)		
EXTINT[15:0]	External Interrupts inputs	Digital Input
NMI	External Non-Maskable Interrupt input	Digital Input
General Purpose I/O (PORT)		
PA31-PA30, PA28-PA27, PA25-PA00	General Purpose I/O Pin in Port A	Digital I/O
PB23-PB22,PB11-PB08,PB03-PB02	General Purpose I/O Pin in Port B	Digital I/O
Generic Clock Generator (GCLK)		
GCLK_IO[8:0] (2)	Generic Clock Source (Input) or Generic Clock Signal (Output)	Digital I/O
Custom Control Logic (CCL)		
IN[11:0]	Inputs to lookup table	Digital Input
OUT[3:0]	Outputs from lookup table	Digital Output
Power Manager (PM)		
RESET_N	External Reset Pin (Active Level: LOW)	Digital Input
Serial Communication Interface (SERCOMx)		
PAD[3:0]	SERCOM Inputs/Outputs Pads	Digital I/O
Oscillators Control (OSCCTRL)		
XIN	Crystal Input or External Clock Input	Analog Input (Crystal Oscillator) Digital Input (External Clock)
XOUT	Crystal Output	Analog Output
32 kHz Oscillators Control (OSC32KCTRL)		
XIN32	32 kHz Crystal Input or External Clock Input	Analog Input (Crystal Oscillator) Digital Input (External Clock)
XOUT32	32 kHz Crystal Output	Analog Output
Timer Counter (TCx)		
WO[1:0]	Waveform Outputs	Digital I/O

.....continued

Signal Name	Function	Type
Timer Counter (TCCx)		
WO[7:0]	Waveform Outputs	Digital I/O
Position Decoder (PDEC)		
PDEC[2:0]	PDEC Input	Digital Input
Serial Wire Debug Interface		
SWCLK	Serial Wire Debug Clock	Digital Input
SWDIO	Serial Wire Debug Data	Digital I/O

Notes:

1. VREFA is shared between the ADC and DAC peripherals.
2. GCLK8 does not support an input/output on a pin.

6. Power Supply and Start-Up Considerations

6.1 Power Domain Overview

Figure 6-1. Power Domain Overview, PIC32MC

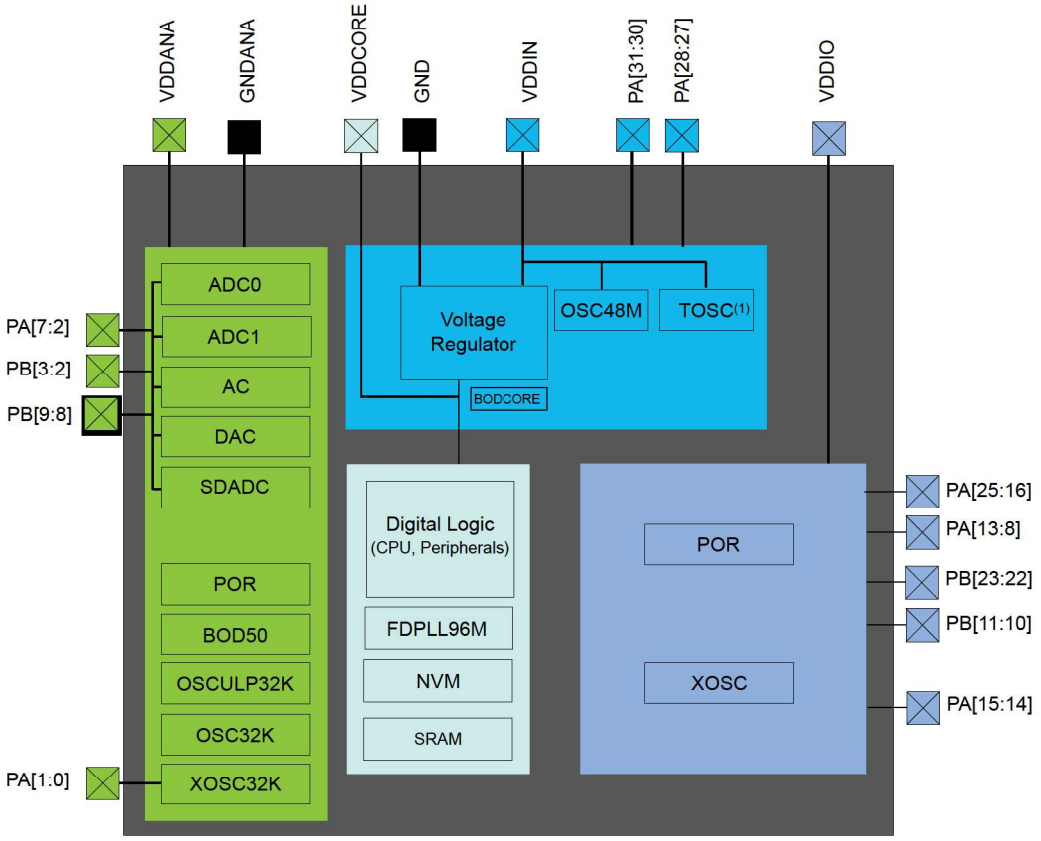

Note:

1. TOSC is an independent Oscillator for the internal Temperature Sensor.

6.2 Power Supply Considerations

6.2.1 Power Supplies PIC32CM MC

The PIC32CM MC has the following power supply pins:

- VDDIO: Powers I/O lines and XOSC
- VDDIN: Powers I/O lines and the OSC48M, TOSC and internal regulator
- VDDANA: Powers I/O lines and the ADC, AC, DAC, OSCULP32K, OSC32K, and XOSC32K
- VDDCORE: Internal regulated voltage output. Powers the core, memories, peripherals, and FDPLL96M

The same voltage must be applied to both the VDDIN and VDDANA pins. This common voltage is referred to as V_{DD} in the data sheet. VDDIO must always be less than or equal to VDDIN.

The ground pins, GND, are common to VDDCORE, VDDIO and VDDIN. The ground pin for VDDANA is GNDANA.

For decoupling recommendations for the different power supplies, refer to the 43. Electrical Characteristics.

6.2.2 Voltage Regulator

The PIC32CM MC voltage regulators have these two modes:

- Normal mode: This is the default mode when CPU and peripherals are running.
- Low Power (LP) mode: This default mode is used when the chip is in standby mode.

6.2.3 Typical Powering Schematics

The PIC32CM MC uses a single supply from 2.70V to 5.50V or dual-supply mode where VDDIO is supplied separately from VDDIN. See the Schematic Checklist chapter.

6.2.4 Power-Up Sequence

6.2.4.1 Minimum Rise Rate

The integrated Power-on Reset (POR) circuitry monitoring the VDDIN = VDDANA, and the VDDIO power supplies require a minimum rise rate, which is described in the 43. Electrical Characteristics.

6.2.4.2 Maximum Rise Rate

The rise rate of the power supply must not exceed the values described in Electrical Characteristics.

6.3 Power-Up

This section summarizes the power-up sequence of the PIC32CM MC. The behavior after power-up is controlled by the Power Manager.

6.3.1 Starting of Clocks

After power-up, the device is set to its initial state and kept in reset, until the power has stabilized throughout the device. Once the power has stabilized, the device will use a 4 MHz clock. This clock is derived from the 48 MHz Internal Oscillator (OSC48M), which is configured to provide a 4 MHz clock and used as a clock source for generic clock generator 0. Generic clock generator 0 is the main clock for the Power Manager (PM).

Some synchronous system clocks are active, allowing software execution.

Refer to the Clock Mask Register in the MCLK - Main Clock for the list of default peripheral clocks running. Synchronous system clocks that are running are by default not divided and receive a 4 MHz clock through generic clock generator 0. Other generic clocks are disabled.

6.3.2 I/O Pins

After power-up, the I/O pins are tri-stated.

6.3.3 Fetching of Initial Instructions

After reset is released, the CPU starts fetching PC and SP values from the reset address, which is 0x00000000. This address points to the first executable address in the internal Flash. The code read from the internal Flash is free to configure the clock system and clock sources. Refer to the Arm Architecture Reference Manual for additional information on CPU startup (http://www.arm.com).

6.4 Power-on Reset (POR) and Brown-out Detector (BOD)

The following features are used to monitor, warn, and reset the device:

- POR: Power-on Reset on VDDIN and VDDIO
- BODVDD: Brown-out Detector on VDDIN
- BODCORE: Voltage Regulator Internal Brown-out Detector on VDDCORE. The Voltage Regulator Internal BOD is calibrated in production and its calibration configuration is stored in the NVM User Row (See 8.3 NVM User Row Mapping). This configuration must not be changed if the user row is written to assure the correct behavior of the BODCORE. This configuration is automatically copied at boot-up in the BODCORE registers.

6.4.1 Power-on Reset on VDDIN

POR monitors VDDIN. It is always activated and monitors voltage at startup and also during all the sleep modes. If VDDIN goes below the threshold voltage, the entire chip is reset.

6.4.2 Power-on Reset on VDDIO

POR monitors VDDIO. It is always activated and monitors voltage at startup and also during all the sleep modes. If VDDIO goes below the threshold voltage, all I/Os supplied by VDDIO are reset.

6.4.3 Brown-out Detector on VDDIN

BODVDD monitors VDDIN.

6.4.4 Brown-out Detector on VDDCORE

Once the device has started up, BODCORE monitors the internal VDDCORE.

7. Product Mapping

Figure 7-1. PIC32CM MC00 Product Mapping

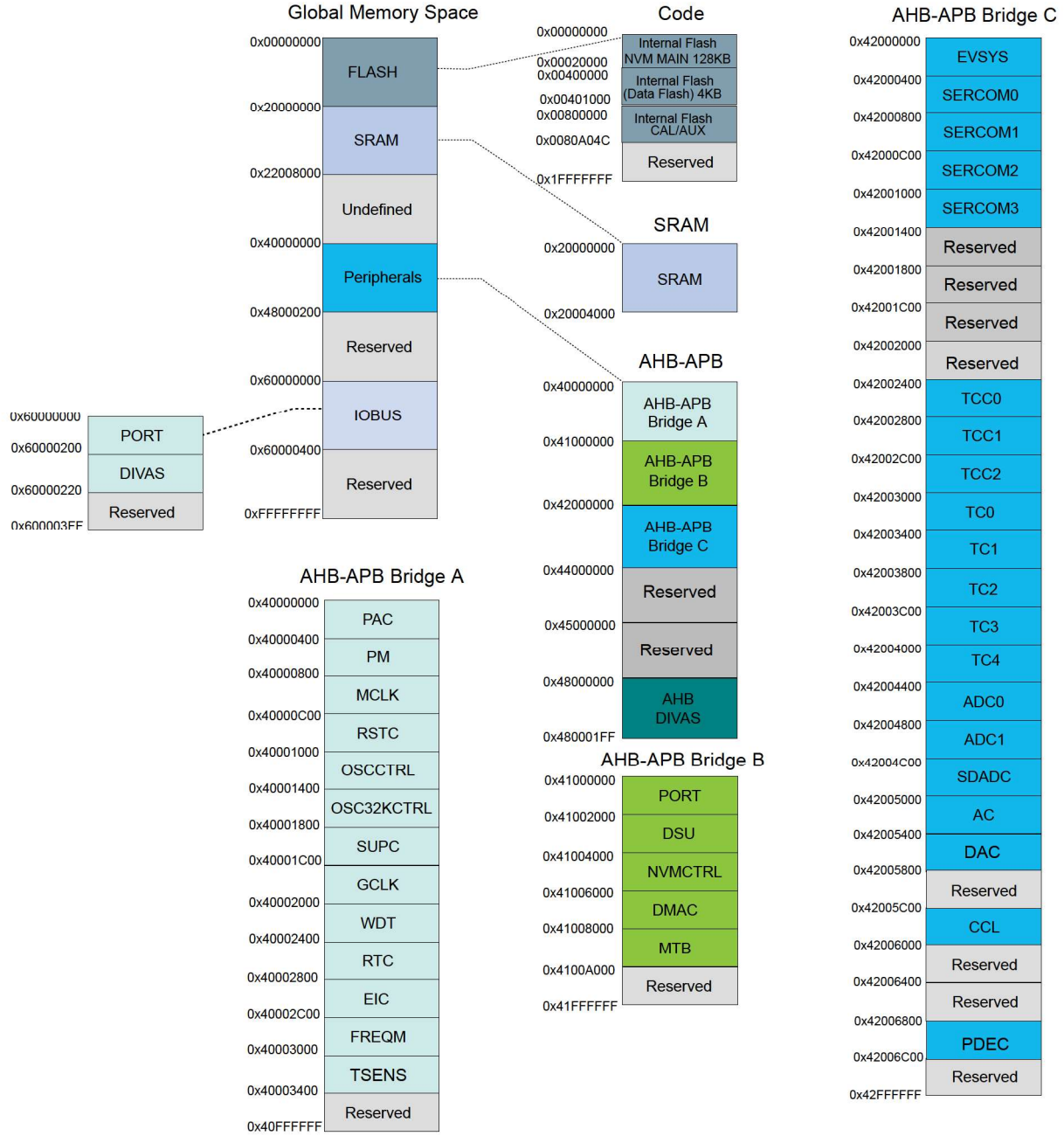

8. Memories

8.1 Embedded Memories

- Internal high-speed Flash with read-while-write capability on section of the array
- Internal high-speed SRAM, single-cycle access at full speed

8.2 Physical Memory Map

The high-speed bus is implemented as a bus matrix. All high-speed bus addresses are fixed, and they are never remapped in any way, even during boot. The 32-bit physical address space is mapped as shown in the following table:

Table 8-1. Memory Map

Memory		StartAddress	PIC32CM1216	PIC32CM6408
Embedded Flash	size	0x00000000	128KB	64KB
	page number		2048	1024
	page size		64 bytes	
Embedded Data Flash section	size	0x00400000	4KB	2KB
	page number		64	32
	page size		64 bytes	
Embedded high-speed SRAM		0x20000000	16KB	8KB
AHB-APB Bridge A		0x40000000	16KB	
AHB-APB Bridge B		0x41000000	64KB	
AHB-APB Bridge C		0x42000000	32KB	
AHB DIVAS		0x48000000	32B	
IOBUS		0x60000000	512B	

8.3 NVM User Row Mapping

The first two 32-bit words of the NVM User Row contains calibration data that are automatically read at device power on.

The NVM User Row can be read at address 0x00804000.

To write the NVM User Row, refer to the NVMCTRL - Non-Volatile Memory Controller.

Note that when writing to the user row the values do not get loaded by the other modules on the device until a device reset occurs.

Table 8-2. NVM User Row Mapping

Bit Position	Name	Usage	Production setting	Related Peripheral Register
2:0	BOOTPROT	Used to select one of eight different bootloader sizes.	0x7	NVMCTRL
7:3	Reserved	-	0x1F	-

.....continued				
Bit Position	**Name**	**Usage**	**Production setting**	**Related Peripheral Register**
13:8	BODVDD Level	BODVDD Threshold Level at power on.	0x8	SUPC.BODVDD.LEVEL
14	BODVDD Disable	BODVDD Disable at power on.	0x0	SUPC.BODVDD.ENABLE
16:15	BODVDD Action	BODVDD Action at power on.	0x1	SUPC.BODVDD.ACTION
25:17	BODCORE calibration	**DO NOT CHANGE** (1)	**0x0A8**	-
26	WDT Enable	WDT Enable at power on.	0x0	WDT.CTRLA.ENABLE
27	WDT Always-On	WDT Always-On at power on.	0x0	WDT.CTRLA.ALWAYSON
31:28	WDT Period	WDT Period at power on.	0xB	WDT.CONFIG.PER
35:32	WDT Window	WDT Window mode time-out at power on.	0xB	WDT.CONFIG.WINDOW
39:36	WDT EWOFFSET	WDT Early Warning Interrupt Time Offset at power on.	0xB	WDT.EWCTRL.EWOFFSET
40	WDT WEN	WDT Timer Window Mode Enable at power on.	0x0	WDT.CTRLA.WEN
41	BODVDD Hysteresis	BODVDD Hysteresis configuration at power on.	0x0	SUPC.BODVDD.HYSTERESIS
42	BODCORE calibration	**DO NOT CHANGE** (1)	**0x0**	-
47:43	Reserved	-	0x1F	-
63:48	LOCK	NVM Region Lock Bits.	0xFFFF	NVMCTRL.LOCK

Note:

1. BODCORE is calibrated in production and its calibration parameters must not be changed to ensure the correct device behavior.

8.4 NVM Software Calibration Area Mapping

The NVM Software Calibration Area contains calibration data that are measured and written during production test. These calibration values should be read by the application software and written back to the corresponding register.

The NVM Software Calibration Area can be read at address 0x00806020.

The NVM Software Calibration Area can not be written.

Table 8-3. NVM Software Calibration Area Mapping

Bit Position	Name	Description
2:0	ADC0 BIASREFBUF	ADC0 Linearity Calibration. Should be written to ADC0 CALIB.BIASREFBUF.
5:3	ADC0 BIASCOMP	ADC0 Bias Calibration. Should be written to ADC0 CALIB.BIASCOMP.
8:6	ADC1 BIASREFBUF	ADC1 Linearity Calibration. Should be written to ADC1 CALIB.BIASREFBUF.
11:9	ADC1 BIASCOMP	ADC1 Bias Calibration. Should be written to ADC1 CALIB.BIASCOMP.

.....continued		
Bit Position	**Name**	**Description**
18:12	OSC32K CAL	OSC32K Calibration. Should be written to OSC32KCTRL OSC32K.CALIB.
40:19	CAL48M	OSC48M Calibration: Should be written to OSCCTRL.CAL48M[21:0].
63:41	Reserved	Reserved

8.5 NVM Temperature Calibration Area Mapping

The NVM Temperature Calibration Area contains calibration data that are measured and written during production test. These calibration values should be read by the application software and written back to the corresponding register.

The NVM Temperature Calibration Area can be read at address 0x806030.

The NVM Temperature Calibration Area can not be written.

Table 8-4. NVM Temperature Calibration Area Mapping

Bit Position	Name	Description
5:0	TSENS TCAL	TSENS Temperature Calibration. Should be written to the TSENS CAL register.
11:6	TSENS FCAL	TSENS Frequency Calibration. Should be written to the TSENS CAL register.
35:12	TSENS GAIN	TSENS Gain Calibration. Should be written to the TSENS GAIN register.
59:36	TSENS OFFSET	TSENS Offset Calibration. Should be written to TSENS OFFSET register.
63:60	Reserved	

8.6 Serial Number

Each device has a unique 128-bit serial number which is a concatenation of four 32-bit words contained at the following addresses:

Word 0: 0x0080A00C

Word 1: 0x0080A040

Word 2: 0x0080A044

Word 3: 0x0080A048

The uniqueness of the serial number is guaranteed only when using all 128 bits.

9. Processor and Architecture

9.1 Cortex M0+ Processor

The PIC32CM MC00 implements the Arm Cortex-M0+ processor, based on the ARMv6 Architecture and Thumb®-2 ISA. The Cortex M0+ is 100% instruction set compatible with its predecessor, the Cortex-M0 core, and upward compatible to Cortex-M3 and M4 cores. The implemented Arm Cortex-M0+ is revision r0p1. For more information refer to www.arm.com.

9.1.1 Cortex M0+ Configuration

Table 9-1. Cortex M0+ Configuration

Features	PIC32CM MC00 configurations
Interrupts	32
Data endianness	Little-endian
SysTick timer	Present
Number of watchpoint comparators	2
Number of breakpoint comparators	4
Halting debug support	Present
Multiplier	Fast (single cycle)
Single-cycle I/O port	Present
Wake-up interrupt controller	Not supported
Vector Table Offset Register	Present
Unprivileged/Privileged support	Present
Memory Protection Unit	8-region
Reset all registers	Absent
Instruction fetch width	32-bit

The Arm Cortex-M0+ core has the following bus interfaces:

- Single 32-bit AMBA-3 AHB-Lite system interface that provides connections to peripherals and all system memory, which includes Flash and RAM.
- Single 32-bit I/O port bus interfacing to the PORT and DIVAS with 1-cycle loads and stores.

9.1.2 Cortex-M0+ Peripherals

- System Control Space (SCS)
  - The processor provides debug through registers in the SCS. Refer to the *Cortex-M0+ Technical Reference Manual* for details (www.arm.com).
- Nested Vectored Interrupt Controller (NVIC)
  - External interrupt signals connect to the NVIC, and the NVIC prioritizes the interrupts. Software can set the priority of each interrupt. The NVIC and the Cortex-M0+ processor core are closely coupled, providing low latency interrupt processing and efficient processing of late arriving interrupts. Refer to 9.2 Nested Vector Interrupt Controller and *Cortex-M0+ Technical Reference Manual* for details (www.arm.com).
- System Timer (SysTick)
  - The System Timer is a 24-bit timer clocked by CLK_CPU that extends the functionality of both the processor and the NVIC. Refer to *Cortex-M0+ Technical Reference Manual* for details (www.arm.com).

When the SysTick Overflow Interrupt is enabled, the RAM Back Bias Control must be disabled (PM->STDBYCFG.bit.BBIASHS = 0) before entering Standby Sleep mode.

- System Control Block (SCB)
  - The System Control Block provides system implementation information, and system control. This includes configuration, control, and reporting of the system exceptions. Refer to *Cortex-M0+ Devices Generic User Guide* for details (www.arm.com).
- Micro Trace Buffer (MTB)
  - The CoreSight MTB-M0+ (MTB) provides a simple execution trace capability to the Cortex-M0+ processor. Refer to the section 9.3 Micro Trace Buffer and *CoreSight MTB-M0+ Technical Reference Manual* for details (www.arm.com).
- Memory Protection Unit (MPU)
  - The Memory Protection Unit divides the memory map into a number of regions, and defines the location, size, access permissions and memory attributes of each region. Refer to *Cortex-M0+ Devices Generic User Guide* for details (http://www.arm.com)

9.1.3 Cortex-M0+ Address Map

Table 9-2. Cortex-M0+ Address Map

Address	Peripheral
0xE000E000	System Control Space (SCS)
0xE000E010	System Timer (SysTick)
0xE000E100	Nested Vectored Interrupt Controller (NVIC)
0xE000ED00	System Control Block (SCB)
0xE000ED90	Memory Protection Unit (MPU)
0x41008000	Micro Trace Buffer (MTB)

9.1.4 I/O Interface

9.1.4.1 Overview

Because accesses to the AMBA® AHB-Lite™ and the single cycle I/O interface can be made concurrently, the Cortex-M0+ processor can fetch the next instructions while accessing the I/Os. This enables single cycle I/O accesses to be sustained for as long as needed.

9.1.4.2 Description

Direct access to PORT registers and DIVAS registers.

9.2 Nested Vector Interrupt Controller

9.2.1 Overview

The Nested Vectored Interrupt Controller (NVIC) in the PIC32CM MC00 supports 32 interrupt lines with four different priority levels. For more details, refer to the Cortex-M0+ Technical Reference Manual (www.arm.com).

9.2.2 Interrupt Line Mapping

Each of the interrupt lines is connected to one peripheral instance, as shown in the table below. Each peripheral can have one or more interrupt flags, located in the peripheral's Interrupt Flag Status and Clear (INTFLAG) register.

The interrupt flag is set when the interrupt condition occurs. Each interrupt in the peripheral can be individually enabled by writing a one to the corresponding bit in the peripheral's Interrupt Enable Set (INTENSET) register, and disabled by writing a one to the corresponding bit in the peripheral's Interrupt Enable Clear (INTENCLR) register.

An interrupt request is generated from the peripheral when the interrupt flag is set and the corresponding interrupt is enabled.

The interrupt requests for one peripheral are ORed together on system level, generating one interrupt request for each peripheral. An interrupt request will set the corresponding interrupt pending bit in the NVIC interrupt pending registers (SETPEND/CLRPEND bits in ISPR/ICPR).

For the NVIC to activate the interrupt, it must be enabled in the NVIC interrupt enable register (SETENA/CLRENA bits in ISER/ICER). The NVIC interrupt priority registers IPR0-IPR7 provide a priority field for each interrupt.

Table 9-3. Interrupt Line Mapping, PIC32CM MC00

Peripheral Source	NVIC Line
External Interrupt Controller (EIC NMI)	NMI
Power Manager (PM) Main Clock (MCLK) Oscillators Controller (OSCCTRL) 32 kHz Oscillators Controller (OSC32KCTRL) Supply Controller (SUPC) Protection Access Controller (PAC)	0
Watchdog Timer (WDT)	1
Real Time Clock (RTC)	2
External Interrupt Controller (EIC)	3
Frequency Meter (FREQM)	4
Temperature Sensor (TSENS)	5
Non-Volatile Memory Controller (NVMCTRL)	6
Direct Memory Access Controller (DMAC)	7
Event System (EVSYS)	8
Serial Communication Controller 0 (SERCOM0)	9
Serial Communication Controller 1 (SERCOM1)	10
Serial Communication Controller 2 (SERCOM2)	11
Serial Communication Controller 3 (SERCOM3)	12
Timer Counter for Control 0 (TCC0)	13
Timer Counter for Control 1 (TCC1)	14
Timer Counter for Control 2 (TCC2)	15
Timer Counter 0 (TC0)	16
Timer Counter 1 (TC1)	17
Timer Counter 2 (TC2)	18
Timer Counter 3 (TC3)	19
Timer Counter 4 (TC4)	20
Analog-to-Digital Converter 0 (ADC0)	21
Analog-to-Digital Converter 1 (ADC1)	22
Analog Comparator (AC)	23
Digital-to-Analog Converter (DAC)	24

© 2020 Microchip Technology Inc.

.....continued	
Peripheral Source	**NVIC Line**
SDADC	25
Position Decoder (PDEC)	26
Reserved	27-31

Note:

1. These modules are not available on all variants. Refer to 1. Configuration Summary.

9.3 Micro Trace Buffer

9.3.1 Features

- Program flow tracing for the Cortex-M0+ processor
- MTB SRAM can be used for both trace and general purpose storage by the processor
- The position and size of the trace buffer in SRAM is configurable by software
- CoreSight compliant

9.3.2 Overview

When enabled, the MTB records changes in program flow, reported by the Cortex-M0+ processor over the execution trace interface shared between the Cortex-M0+ processor and the CoreSight MTB-M0+. This information is stored as trace packets in the SRAM by the MTB. An off-chip debugger can extract the trace information using the Debug Access Port to read the trace information from the SRAM. The debugger can then reconstruct the program flow from this information.

The MTB simultaneously stores trace information into the SRAM, and gives the processor access to the SRAM. The MTB ensures that trace write accesses have priority over processor accesses.

The execution trace packet consists of a pair of 32-bit words that the MTB generates when it detects the processor PC value changes non-sequentially. A non-sequential PC change can occur during branch instructions or during exception entry. Refer to the *"CoreSight MTB-M0+ Technical Reference Manual"* for details on the MTB execution trace packet format.

Tracing is enabled when the MASTER.EN bit in the Master Trace Control Register is 1. There are various ways to set the bit to 1 to start tracing, or to 0 to stop tracing. Refer to the *"CoreSight Cortex-M0+ Technical Reference Manual"* for details on the Trace start and stop and for a detailed description of the MTB's MASTER register. The MTB can be programmed to stop tracing automatically when the memory fills to a specified watermark level or to start or stop tracing by writing directly to the MASTER.EN bit. If the watermark mechanism is not being used and the trace buffer overflows, then the buffer wraps around overwriting previous trace packets.

The base address of the MTB registers is 0x41008000, and this address is also written in the CoreSight ROM table. The offset of each register from the base address is fixed and as defined by the *"CoreSight MTB-M0+ Technical Reference Manual"*. The MTB has 4 programmable registers to control the behavior of the trace features:

- POSITION: Contains the trace write pointer and the wrap bit.
- MASTER: Contains the main trace enable bit and other trace control fields.
- FLOW: Contains the WATERMARK address and the AUTOSTOP and AUTOHALT control bits.
- BASE: Indicates where the SRAM is located in the processor memory map. This register is provided to enable auto discovery of the MTB SRAM location, by a debug agent.

Refer to the *"CoreSight MTB-M0+ Technical Reference Manual"* for a detailed description of these registers.

9.4 High-Speed Bus System

9.4.1 Features

High-Speed Bus Matrix has the following features:

- Symmetric crossbar bus switch implementation
- Allows concurrent accesses from different masters to different slaves
- 32-bit data bus
- Operation at a 1-to-1 clock frequency with the bus masters

9.4.2 Configuration

Figure 9-1. Master/Slave Relation High-Speed Bus Matrix, PIC32CM MC00

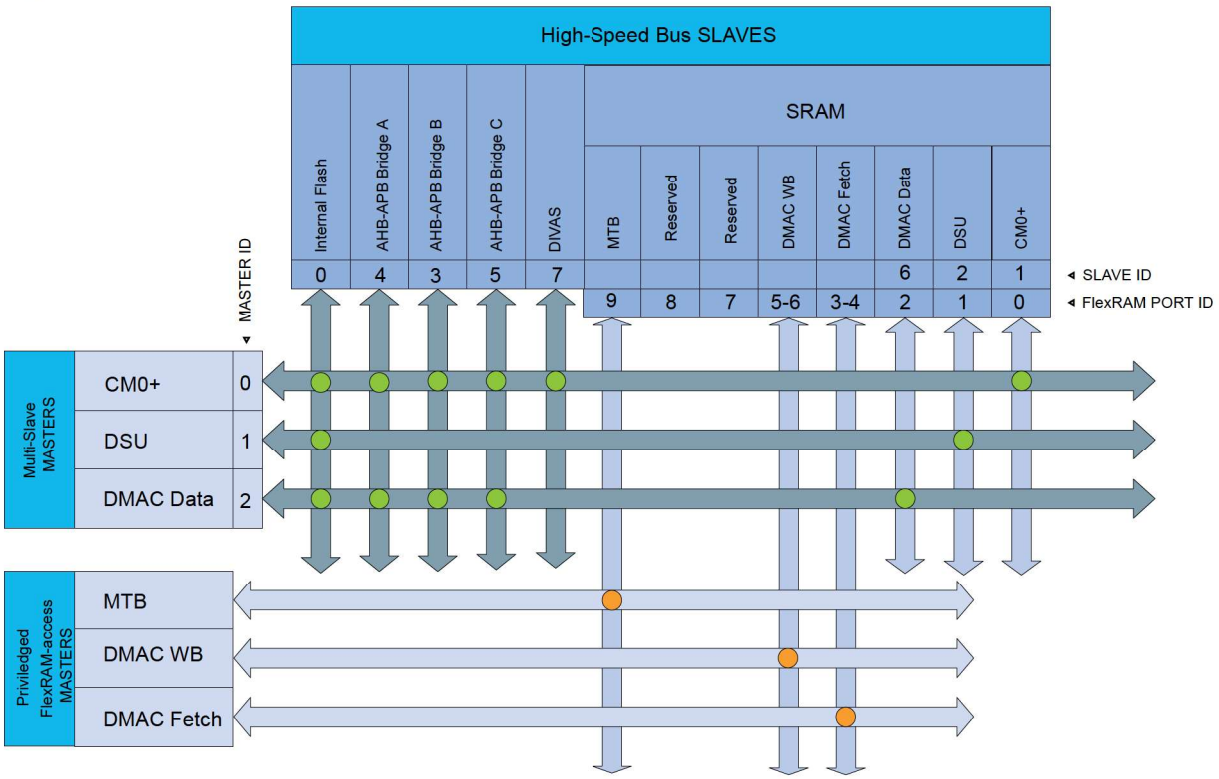

Table 9-4. Bus Matrix Masters

Bus Matrix Masters
Cortex M0+ Processor (CM0+)
Device Service Unit (DSU)
Direct Memory Access Controller/Data Access (DMAC)

Table 9-5. Bus Matrix Slaves

Bus Matrix Slaves
Internal Flash Memory
SRAM - CM0+ Access
SRAM - DSU Access

.....continued
Bus Matrix Slaves
AHB-APB Bridge A
AHB-APB Bridge B
AHB-APB Bridge C
SRAM - DMAC Data Access
DIVAS - Divide Accelerator

Table 9-6. SRAM Port Connections

SRAM Port Connection	Port ID	Connection Type
Cortex M0+ (CM0+) Processor	0	Bus Matrix
Device Service Unit (DSU)	1	Bus Matrix
Direct Memory Access Controller (DMAC) - Data Access	2	Bus Matrix
Direct Memory Access Controller (DMAC) - Fetch Access 0	3	Direct
Direct Memory Access Controller (DMAC) - Fetch Access 1	4	Direct
Direct Memory Access Controller (DMAC) - Write-Back Access 0	5	Direct
Direct Memory Access Controller (DMAC) - Write-Back Access 1	6	Direct
Reserved	7	
Reserved	8	
Micro Trace Buffer (MTB)	9	Direct

Note: The SMBIST has a direct access to SRAM, by passing the SRAM ports.

9.4.3 SRAM Quality of Service

To ensure that masters with latency requirements get sufficient priority when accessing SRAM, the different masters can be configured to have a given priority for different type of access.

The Quality of Service (QoS) level is independently selected for each master accessing the SRAM. For any access to the SRAM the SRAM also receives the QoS level. The QoS levels and their corresponding bit values for the QoS level configuration is shown in the following table.

Table 9-7. Quality of Service Level Configuration

Value	Name	Description
0x0	DISABLE	Background (no sensitive operation)
0x1	LOW	Sensitive Bandwidth
0x2	MEDIUM	Sensitive Latency
0x3	HIGH	Critical Latency

If a master is configured with QoS level DISABLE (0x0) or LOW (0x1) there will be minimum latency of one cycle for the SRAM access.

The priority order for concurrent accesses are decided by two factors. First, the QoS level for the master and second, a static priority given by the SRAM Port ID as defined in SRAM Port Connections. The lowest port ID has the highest static priority.

The MTB has fixed QoS level HIGH (0x3) and the DSU has fixed QoS level LOW (0x1).

The CPU QoS level can be written/read at address 0x4100A110, bits [1:0]. Its reset value is 0x0.

Refer to the different master registers for configuring their QoS (MRCFG, QoS, and QOSCTRL for DMAC).

10. Peripherals Configuration Summary

Table 10-1. Peripherals Configuration Summary for PIC32CM MC00

Peripheral	Base Address	IRQ	AHB CLK	APB CLK	Generic CLK	PAC		Events		DMA	Sleep Walking
			Enabled at reset	Enabled at reset	Index	Index	Prot at reset	User	Generator	Index	
AHB-APB-Bridge A	0x40000000	-	Y	-	-	-	-	-	-	-	N/A
PAC	0x40000000	0	Y	Y	-	0	N	-	81:ACCERR	-	N/A
PM	0x40000400	0	-	Y	-	1	N	-	-	-	N/A
MCLK	0x40000800	0	-	Y	-	2	N	-	-	-	Y
RSTC	0x40000C00	-	-	Y	-	3	N	-	-	-	N/A
OSCCTRL	0x40001000	0	-	Y	0:FDPLL96M clk source 1:FDPLL96M 32kHz	4	N	-	1:XOSC_FAIL	-	Y
OSC32KCTRL	0x40001400	0	-	Y	-	5	N	-	2:XOSC32K_FAIL	-	Y
SUPC	0x40001800	0	-	Y	-	6	N	-	-	-	N/A
GCLK	0x40001C00	-	-	Y	-	7	N	-	-	-	N/A
WDT	0x40002000	1	-	Y	-	8	N	-	-	-	Y
RTC	0x40002400	2	-	Y	-	9	N	-	3: CMP0/ALARM0 4: CMP1 5: OVF 6:13: PER0-7	-	Y
EIC	0x40002800	3, NMI	-	Y	2	10	N	-	14-29:EXTINT0-15	-	Y
FREQM	0x40002C00	4	-	Y	3: Measure 4: Reference	11	N	-	-	-	N/A
TSENS	0x40003000	5	-	N	5: TSENS	12	N	0: START	30: WINMON	1: RESRDY	N/A
AHB-APB-Bridge B	0x41000000	-	Y	-	-	-	-	-	-	-	N/A
PORT	0x41000000	-		Y	-	0	N	1-4: EV0-3	-	-	Y
DSU	0x41002000	-	Y	Y	-	1	Y	-	-	-	N/A
NVMCTRL	0x41004000	6	Y	Y	-	2	N	-	-	-	Y
DMAC	0x41006000	7	Y	N/A	-	3	N	5-8: CH0-3	31-34: CH0-3	-	Y
MTB	0x41008000	-	-	N/A	-	4	N	42: START 43: STOP	-	-	N/A
AHB-APB-Bridge C	0x42000000	-	Y	-	-	-	-	-	-	-	N/A
EVSYS	0x42000000	8	-	N	6-17: one per Channel	0	N	-	-	-	Y
SERCOM0	0x42000400	9	-	N	19: CORE 18: SLOW	1	N	-	-	2: RX 3: TX	Y
SERCOM1	0x42000800	10	-	N	20: CORE 18: SLOW	2	N	-	-	4: RX 5: TX	Y
SERCOM2	0x42000C00	11	-	N	21: CORE 18: SLOW	3	N	-	-	6: RX 7: TX	Y

.....continued

Peripheral	Base Address	IRQ	AHB CLK	APB CLK	Generic CLK	PAC		Events		DMA	Sleep Walking
			Enabled at reset	Enabled at reset	Index	Index	Prot at reset	User	Generator	Index	
SERCOM3	0x42001000	12	-	N	22: CORE 18: SLOW	4	N	-	-	8: RX 9: TX	Y
Reserved	0x42001400	-	-	-	-	-	-	-	-	-	-
TCC0	0x42002400	13	-	N	23	9	N	9-10: EV0-1 11-14: MC0-3	35: OVF 36: TRG 37: CNT 38-41: MC0-3	10: OVF 11-14: MC0-3	Y
TCC1	0x42002800	14	-	N	23	10	N	15-16: EV0-1 17-18: MC0-1	42: OVF 43: TRG 44: CNT 45-46: MC0-1	15: OVF 16-17: MC0-1	Y
TCC2	0x42002C00	15	-	N	24	11	N	19-20: EV0-1 21-22: MC0-1	47: OVF 48: TRG 49: CNT 50-51: MC0-1	18: OVF 19-20: MC0-1	Y
TC0	0x42003000	16	-	N	25	12	N	23: EVU	52: OVF 53-54: MC0-1	21: OVF 22-23: MC0-1	Y
TC1	0x42003400	17	-	N	25	13	N	24: EVU	55: OVF 56-57: MC0-1	24: OVF 25-26: MC0-1	Y
TC2	0x42003800	18	-	N	26	14	N	25: EVU	58: OVF 59-60: MC0-1	27: OVF 28-29: MC0-1	Y
TC3	0x42003C00	19	-	N	26	15	N	26: EVU	61: OVF 62-63: MC0-1	30: OVF 31-32: MC0-1	Y
TC4	0x42004000	20	-	N	27	16	N	27: EVU	64: OVF 65-66: MC0-1	33: OVF 34-35: MC0-1	Y
ADC0	0x42004400	21	-	N	28	17	N	28: START 29: FLUSH	67: RESRDY 68: WINMON	36: RESRDY	Y
ADC1	0x42004800	22	-	N	29	18	N	30: START 31: FLUSH	69: RESRDY 70: WINMON	37: RESRDY	Y
SDADC	0x42004C00	25	-	N	30	19	N	32: START 33: FLUSH	71: RESRDY 72: WINMON	38: RESRDY	Y
AC	0x42005000	23	-	N	33	20	N	34-35: SOC0-1	73-74: COMP0-1 75: WIN0	-	Y
DAC	0x42005400	24	-	N	31	21	N	36: START	76: EMPTY	39: EMPTY	Y
Reserved	0x42005800	-	-	-	-	-	-	-	-	-	-
CCL	0x42005C00	-	-	N	32	23	N	37-40: LUTIN0-3	77-80: LUTOUT0-3	-	Y
Reserved	0x42006000	-	-	-	-	-	-	-	-	-	-

.....continued

Peripheral	Base Address	IRQ	AHB CLK	APB CLK	Generic CLK	PAC		Events		DMA	Sleep Walking
			Enabled at reset	Enabled at reset	Index	Index	Prot at reset	User	Generator	Index	
PDEC	0x42006800	26	-	N	34	26	N	44: EVU0	83: OVF	-	Y
									84: ERR		
								45: EVU1	85: DIR		
									86: VLC		
								46: EVU2	87: MC0		
									88: MC1		
DIVAS	0x48000000	-	Y	-	-	-	-	-	-	-	N/A

Registers can be 8, 16, or 32 bits wide. Atomic 8-bit, 16-bit, and 32-bit accesses are supported. In addition, the 8-bit quarters and 16-bit halves of a 32-bit register, and the 8-bit halves of a 16-bit register can be accessed directly.

PAC Write-Protection Register Property:

Some registers are optionally write-protected by the Peripheral Access Controller (PAC).

PAC write protection is denoted by the "PAC Write-Protection" property in each individual register description. For more details, refer to the PAC - Peripheral Access Controller.

Read-Synchronized, Write-Synchronized Register Property:

Some registers or bit fields within a register require synchronization when read and/or written.

Synchronization is denoted by the "Read-Synchronized" ("Read-Synchronized Bits") and "Write-Synchronized" ("Write-Synchronized Bits") property in each individual register description. For more details, refer to Register Synchronization.

Enable-Protected Register Property:

Some registers or bit fields within a register can only be written when the peripheral is disabled.

Such protection is denoted by the "Enable-Protected" ("Enable-Protected Bits") property in each individual register description.

11. Clock System

This chapter only aims to summarize the clock distribution and terminology in the PIC32CM MC00 device. It will not explain every detail of its configuration. For in-depth details, refer to the referenced module chapters.

11.1 Clock Distribution

Figure 11-1. Clock distribution

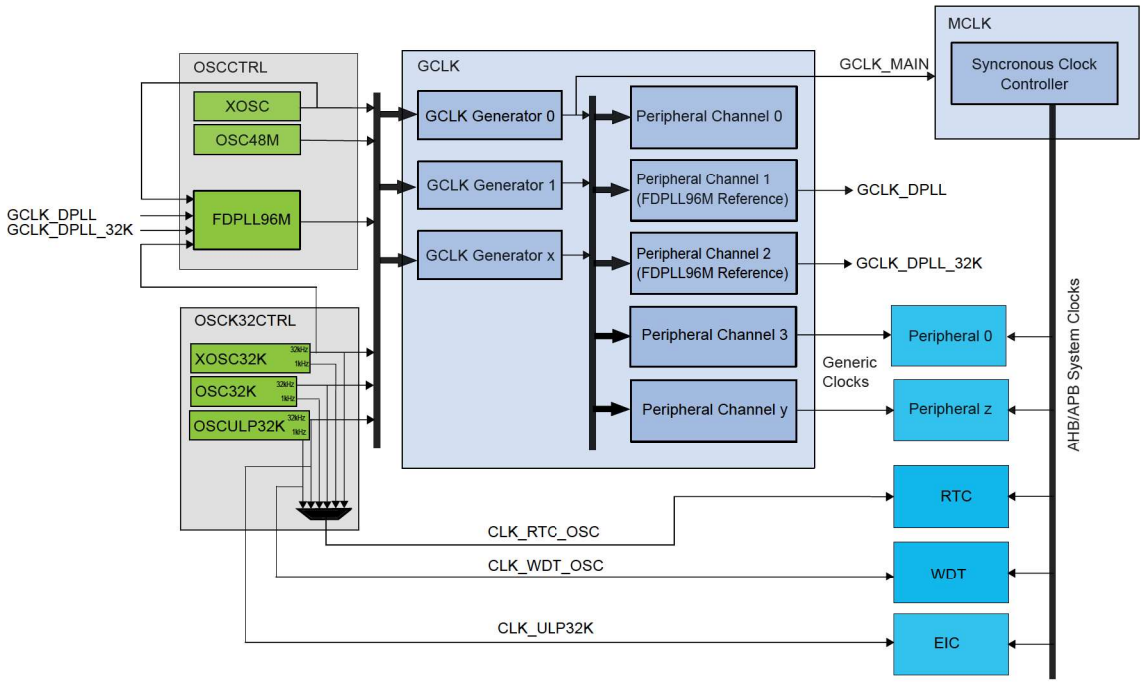

The clock system on the PIC32CM MC00 consists of these key features:

- Clock sources, controlled by OSCCTRL and OSC32KCTRL
  - A Clock source is the base clock signal used in the system. Example clock sources are the internal 48 MHz oscillator (OSC48M), External crystal oscillator (XOSC) and the Digital phase-locked loop (FDPLL96M).
- Generic Clock Controller (GCLK) which controls the clock distribution system, made up of the following:
  - Generic Clock generators: A programmable prescaler, that can use any of the system clock sources as its source clock. The Generic Clock Generator 0, also called GCLK_MAIN, is the clock feeding the Power Manager used to generate synchronous clocks.
  - Generic Clocks: Typically the clock input of a peripheral on the system. The generic clocks, through the Generic Clock Multiplexer, can use any of the Generic Clock generators as its clock source. Multiple instances of a peripheral will typically have a separate generic clock for each instance.
- Main Clock controller (MCLK)
  - The MCLK controls synchronous clocks on the system. This includes the CPU, bus clocks (APB, AHB) as well as the synchronous (to the CPU) user interfaces of the peripherals. It contains clock masks that can turn on/off the user interface of a peripheral as well as prescalers for the CPU and bus clocks.

The figure below shows an example where SERCOM0 is clocked by the OSC48M. The OSC48M is enabled, the Generic Clock Generator 1 uses the OSC48M as its clock source, and the generic clock 19, also called GCLK_SERCOM0_CORE, that is connected to SERCOM0 uses generator 1 as its source. The SERCOM0 interface, clocked by CLK_SERCOM0_APB, has been unmasked in the APBC Mask register in the MCLK.

Figure 11-2. Example of SERCOM clock

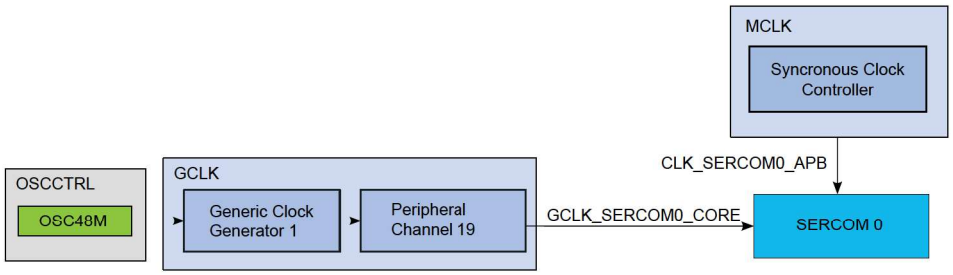

11.2 Synchronous and Asynchronous Clocks

As the CPU and the peripherals can be clocked from different clock sources, possibly with widely different clock speeds, some peripheral accesses by the CPU needs to be synchronized between the different clock domains. In these cases the peripheral includes a SYNCBUSY status register that can be used to check if a sync operation is in progress. As the nature of the synchronization might vary between different peripherals, detailed description for each peripheral can be found in the sub-chapter “synchronization” for each peripheral where this is necessary.

In the datasheet references to synchronous clocks are referring to the CPU and bus clocks, while asynchronous clocks are clock generated by generic clocks.

11.3 Register Synchronization

11.3.1 Overview

All peripherals are composed of one digital bus interface, which is connected to the APB or AHB bus and clocked using a corresponding synchronous clock, and one core clock, which is clocked using a generic clock. Access between these clock domains must be synchronized. As this mechanism is implemented in hardware the synchronization process takes place even if the different clocks domains are clocked from the same source and on the same frequency. All registers in the bus interface are accessible without synchronization. All core registers in the generic clock domain must be synchronized when written. Some core registers must be synchronized when read. Registers that need synchronization has this denoted in each individual register description.

11.3.2 General Write-Synchronization

Inside the same module, each core register, denoted by the Write-Synchronized property, use its own synchronization mechanism so that writing to different core registers can be done without waiting for the end of synchronization of previous core register access.

However, a second write access to the same core register, while synchronization is on going, is discarded and an error is reported through the PAC. To write again to the same core register in the same module, user must wait for the end of synchronization.

For each core register, that can be written, a synchronization status bit is associated

Example:

REGA, REGB are 8-bit core registers. REGC is 16-bit core register.

Offset	Register
0x00	REGA
0x01	REGB
0x02	REGC
0x03	

Since synchronization is per register, users can write REGA (8-bit access) then immediately write REGB (8-bit access) without error.

Users can write REGC (16-bit access) without affecting REGA or REGB. But if user writes REGC in two consecutive 8-bit accesses, second write will be discarded and generate an error.

When users makes a 32-bit access to offset 0x00, all registers are written but REGA, REGB, REGC can be updated at a different time because of independent write synchronization

11.3.3 General Read-Synchronization

Before any read of a core register, the user must check the related bit in the SYNCBUSY register is cleared.

Read access to core register is always immediate but the return value is reliable only if a synchronization of this core register is not going.

11.3.4 Completion of Synchronization

The user can either poll the SYNCBUSY register or use the Synchronization Ready interrupt (if available) to check when the synchronization is complete.

11.3.5 Enable Write-Synchronization

Writing to the Enable bit in the Control register (CTRL.ENABLE) will also trigger write-synchronization and set SYNCBUSY.ENABLE. CTRL.ENABLE will read its new value immediately after being written. The Synchronization Ready interrupt (if available) cannot be used for Enable write-synchronization.

11.3.6 Software Reset Write-Synchronization

Writing a one to the Software Reset bit in CTRL (CTRL.SWRST) will also trigger write-synchronization and set SYNCBUSY.SWRST. When writing a one to the CTRL.SWRST bit it will immediately read as one. CTRL.SWRST and SYNCBUSY.SWRST will be cleared by hardware when the peripheral has been reset. Writing a zero to the CTRL.SWRST bit has no effect. The Synchronization Ready interrupt (if available) cannot be used for Software Reset write-synchronization.

11.3.7 Synchronization Delay

The synchronization will delay the read/write access duration by a delay D, as shown in the equation below:

$$5 \cdot P_{\mathrm{GCLK}} + 2 \cdot P_{\mathrm{APB}} < D < 6 \cdot P_{\mathrm{GCLK}} + 3 \cdot P_{\mathrm{APB}}$$

Where:

P_{GCLK} is the period of the generic clock and P_{APB} is the period of the peripheral bus clock. A normal peripheral bus register access duration is $2 \cdot P_{\mathrm{APB}}$.

11.4 Enabling a Peripheral

To enable a peripheral clocked by a generic clock, the following parts of the system needs to be configured:

- A running clock source.
- A clock from the Generic Clock Generator must be configured to use one of the running clock sources, and the generator must be enabled.
- The generic clock, through the Generic Clock Multiplexer, that connects to the peripheral needs to be configured with a running clock from the Generic Clock Generator, and the generic clock must be enabled.
- The user interface of the peripheral needs to be unmasked in the Main Clock Controller (MCLK). If this is not done the peripheral registers will read as all 0's and any writes to the peripheral will be discarded.

11.5 On-demand, Clock Requests

Figure 11-3. Clock request routing

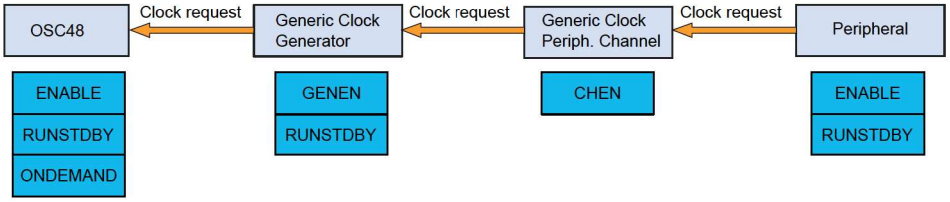

All the clock sources in the system can be run in an on-demand mode, where the clock source is in a stopped state when no peripherals are requesting the clock source. Clock requests propagate from the peripheral, through the GCLK, to the clock source. If one or more peripheral is using a clock source, the clock source will be started/kept running. As soon as the clock source is no longer needed and no peripheral have an active request the clock source will be stopped until requested again. For the clock request to reach the clock source, the peripheral, the generic clock and the clock from the Generic Clock Generator in-between must be enabled. The time taken from a clock request being asserted to the clock source being ready is dependent on the clock source startup time, clock source frequency as well as the divider used in the Generic Clock Generator. The total startup time from a clock request to the clock is available for the peripheral is given below:

```
Delay_start_max = Clock source startup time + 2 * clock source periods + 2 * divided clock
source periods
Delay_start_min = Clock source startup time + 1 * clock source period + 1 * divided clock
source periodDelay_start_min = Clock source startup time + 1 * clock source period + 1 *
divided clock source period
```

The delay for shutting down the clock source when there is no longer an active request is given below:

```
Delay_stop_min = 1 * divided clock source period + 1 * clock source period
Delay_stop_max = 2 * divided clock source periods + 2 * clock source periods
```

The On-Demand principle can be disabled individually for each clock source by clearing the ONDEMAND bit located in each clock source controller. The clock is always running whatever is the clock request. This has the effect to remove the clock source startup time at the cost of the power consumption.

In standby mode, the clock request mechanism is still working if the modules are configured to run in Standby mode (RUNSTDBY bit).

11.6 Power Consumption vs. Speed

Due to the nature of the asynchronous clocking of the peripherals, users need to consider either targeting a low-power or a fast-acting system. If clocking a peripheral with a very low clock, the active power consumption of the peripheral will be lower. At the same time the synchronization to the synchronous (CPU) clock domain is dependent on the peripheral clock speed, and will be longer with a slower peripheral clock, giving lower response time and more time waiting for the synchronization to complete.

11.7 Clocks after Reset

On any reset, the synchronous clocks start to their initial state:

- OSC48M is enabled and divided by 12
- GCLK_MAIN uses OSC48M as source
- CPU and BUS clocks are undivided

On a power reset the GCLK starts to their initial state:

- All generic clock generators disabled except:
  - The generator 0 (GCLK_MAIN) using OSC48M as source, with no division

- All generic clocks disabled

On a user reset the GCLK starts to their initial state, except for:

- Generic clocks that are write-locked (WRTLOCK is written to one prior to reset)

On any reset, the clock sources are reset to their initial state except the 32.768 kHz clock sources which are reset only by a power reset.

12. Generic Clock Controller (GCLK)

12.1 Overview

Depending on the application, peripherals may require specific clock frequencies to operate correctly. The Generic Clock controller (GCLK) features 9 Generic Clock Generators 0..8 that can provide a wide range of clock frequencies.

Generators can be set to use different external and internal oscillators as source. The clock of each Generator can be divided. The outputs from the Generators are used as sources for the Peripheral Channels, which provide the Generic Clocks (GCLK_PERIPH) to the peripheral modules, as shown in the 12.3 Block Diagram. The number of peripheral clocks depends on how many peripherals the device has.

Note: The Generic Clock Generator 0 is always the direct source of the GCLK_MAIN signal.

12.2 Features

- Provides a device-defined, configurable number of Peripheral Channel clocks
- Wide frequency range:
  - Various clock sources
  - Embedded dividers

12.3 Block Diagram

The generation of Peripheral Clock signals (GCLK_PERIPH) and the Main Clock (GCLK_MAIN) can be seen in the figure below.

Figure 12-1. Device Clocking Diagram

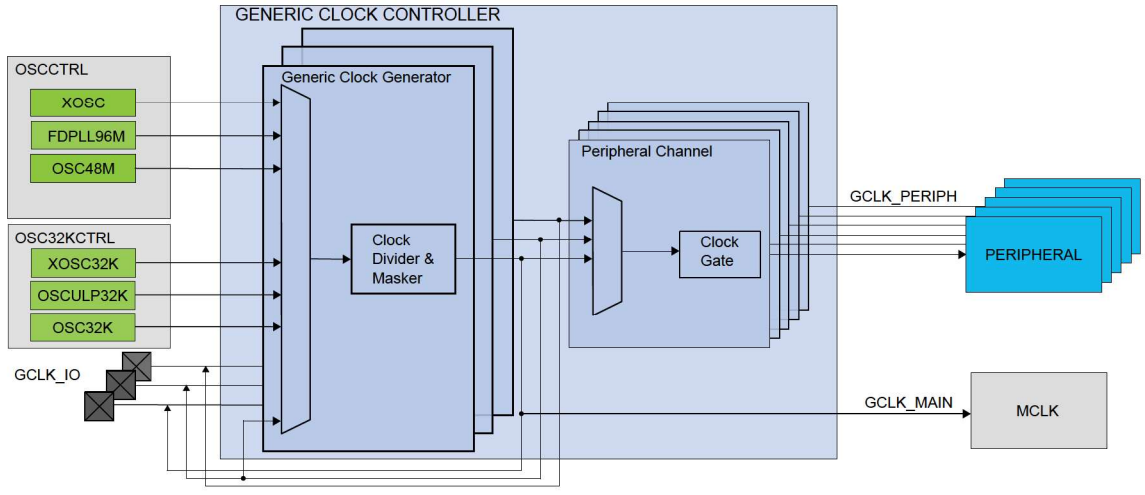

The GCLK block diagram is shown below:

Figure 12-2. Generic Clock Controller Block Diagram

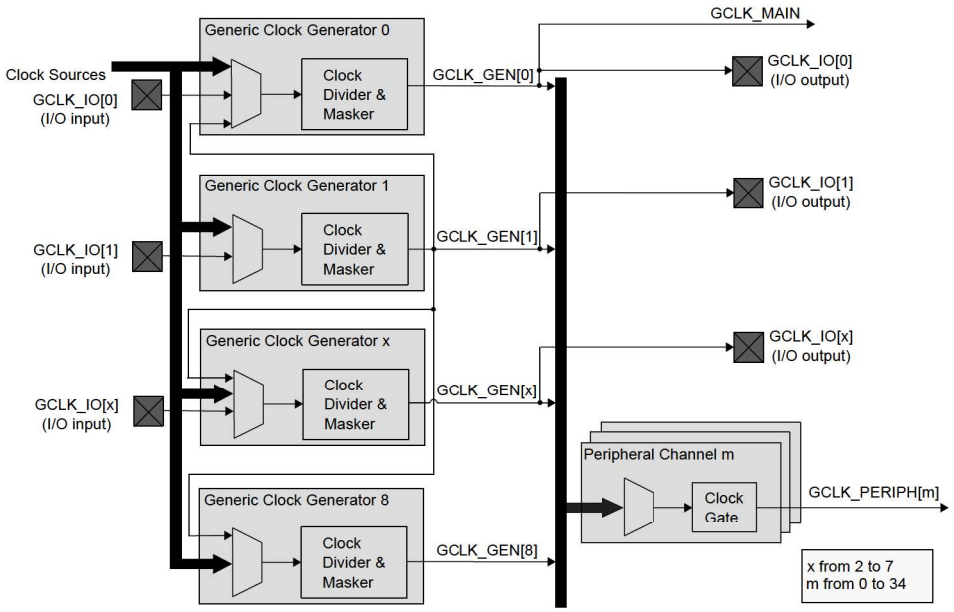

12.4 Signal Description

Table 12-1. GCLK Signal Description

Signal Name	Type	Description
GCLK_IO[7:0](1,2,3)	Digital I/O	Clock source for Generators when input Generic Clock signal when output

Notes:

1. One signal can be mapped on several pins.
2. Each GCLK_IO[x] signal is connected to the related Generic Clock Generator x, for x in [7:0].
3. There is no GCLK_IO8 input or output for the Generic Clock Generator 8.

12.5 Peripheral Dependencies

Peripheral	Base Address	IRQ	AHB CLK	APB CLK	Generic CLK	PAC		Events		DMA	Sleep Walking
			Enabled at reset	Enabled at reset	Index	Index	Prot at reset	User	Generator	Index	
GCLK	0x40001C00	-	-	Y	-	7	N	-	-	-	-

12.6 Functional Description

12.6.1 Principle of Operation

The GCLK module is comprised of nine Generic Clock Generators (Generators) sourcing up to 34 Peripheral Channels and the Main Clock signal GCLK_MAIN.

A clock source selected as input to a Generator can either be used directly, or it can be prescaled in the Generator. A generator output is used by one or more Peripheral Channels to provide a peripheral generic clock signal (GCLK_PERIPH) to the peripherals.

12.6.2 Basic Operation

12.6.2.1 Initialization

Before a Generator is enabled, the corresponding clock source should be enabled. The Peripheral clock must be configured as outlined by the following steps:

1. The Generator must be enabled (GENCTRLn.GENEN=1) and the division factor must be set (GENTRLn.DIVSEL and GENCTRLn.DIV) by performing a single 32-bit write to the Generator Control register (GENCTRLn).
2. The Generic Clock for a peripheral must be configured by writing to the respective Peripheral Channel Control register (PCHCTRLm). The Generator used as the source for the Peripheral Clock must be written to the GEN bit field in the Peripheral Channel Control register (PCHCTRLm.GEN). Ensure the Peripheral Channel is enabled (PCHCTRLm.CHEN=1) before configuring the associated peripheral.

Note: Each Generator n is configured by one dedicated register GENCTRLn. Each Peripheral Channel m is configured by one dedicated register PCHCTRLm. Refer to the Table 12-9 for the mapping of a peripheral to index m.

12.6.2.2 Enabling, Disabling, and Resetting

The GCLK module has no enable/disable bit to enable or disable the whole module.

The GCLK is reset by setting the Software Reset bit in the Control A register (CTRLA.SWRST) to 1. All registers in the GCLK will be reset to their initial state, except for Peripheral Channels and associated Generators that have their Write Lock bit set to 1 (PCHCTRLm.WRTLOCK). For further details, refer to 12.6.2.10.4 Configuration Lock.

12.6.2.3 Generic Clock Generator

Each Generator (GCLK_GEN) can be set to run from one of nine different clock sources except GCLK_GEN[1], which can be set to run from one of eight sources. GCLK_GEN[1] is the only Generator that can be selected as source to others Generators.

Each generator GCLK_GEN[x] (except GCLK_GEN[8]) can be connected to one specific pin GCLK_IO[x]. A pin GCLK_IO[x] can be set either to act as source to GCLK_GEN[x] or to output the clock signal generated by GCLK_GEN[x].

The selected source can be divided. Each Generator can be enabled or disabled independently.

Each GCLK_GEN clock signal can then be used as clock source for Peripheral Channels. Each Generator output can be allocated to one or more Peripherals.

GCLK_GEN[0] is used as GCLK_MAIN for the synchronous clock controller inside the 13. Main Clock (MCLK). Refer to the Main Clock Controller description for details on the synchronous clock generation.

Figure 12-3. Generic Clock Generator

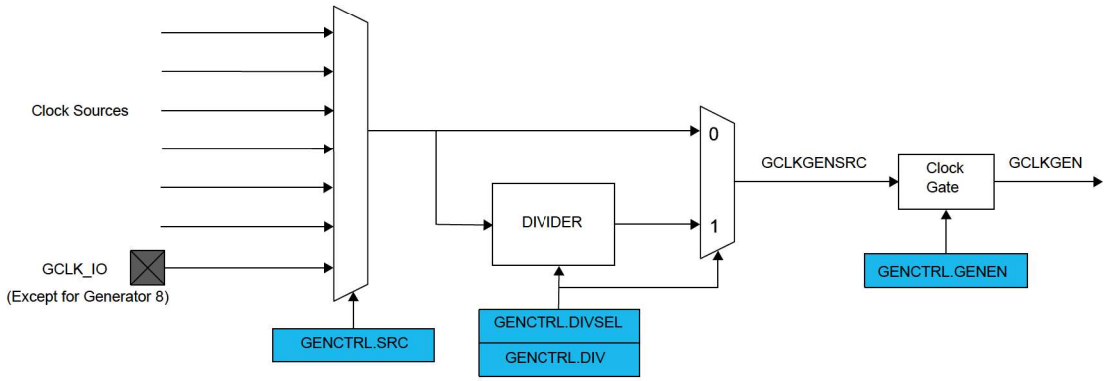

12.6.2.4 Enabling a Generator

A Generator is enabled by writing a '1' to the Generator Enable bit in the Generator Control register (GENCTRLn.GENEN = 1).

12.6.2.5 Disabling a Generator

A Generator is disabled by writing a '0' to GENCTRLn.GENEN. When GENCTRLn.GENEN = 0, the GCLK_GEN[n] clock is disabled and gated.

12.6.2.6 Selecting a Clock Source for the Generator

Each Generator can individually select a clock source by setting the Source Select bit group in the Generator Control register (GENCTRLn.SRC).

Changing from one clock source, for example A, to another clock source, B, can be done on the fly: If clock source B is not ready, the Generator will continue using clock source A. As soon as source B is ready, the Generator will switch to it. During the switching operation, the Generator maintains clock requests to both clock sources A and B, and will release source A as soon as the switch is done. The according bit in the SYNCBUSY register (SYNCBUSY.GENCTRLn) will remain '1' until the switch operation is completed.

Before switching the Generic Clock Generator 0 (GCLKGEN0) from a clock source A to another clock source B, enable the ONDEMAND feature of the clock source A to ensure a proper transition from clock source A to clock source B.

Only Generator 1 can be used as a common source for all other generators.

12.6.2.7 Changing the Clock Frequency

The selected source for a Generator can be divided by writing a division value in the Division Factor bit field of the Generator Control register (GENCTRLn.DIV). How the actual division factor is calculated is depending on the Divide Selection bit (GENCTRLn.DIVSEL).

If GENCTRLn.DIVSEL= 0 and GENCTRLn.DIV is either 0 or 1, the output clock will be undivided.

Note: The number of available DIV bits may vary from Generator to Generator.

12.6.2.8 Duty Cycle

When dividing a clock with an odd division factor, the duty-cycle will not be 50/50. Setting the Improve Duty Cycle bit of the Generator Control register (GENCTRLn.IDC) will result in a 50/50 duty cycle.

12.6.2.9 External Clock

The output clock (GCLK_GEN) of each Generator can be sent to I/O pins (GCLK_IO).

If the Output Enable bit in the Generator Control register is set (GENCTRLn.OE = 1) and the generator is enabled (GENCTRLn.GENEN=1), the Generator requests its clock source and the GCLK_GEN clock is output to an I/O pin. If GCLK_IO is selected as a generator source in the GENCTRLn.SRC bit field, the external clock will be used as a source for GCLKn. When using an external GCLK_IO as a source for Generic Clock Generator 0 (GCLKGEN0), ensure the external source has stabilized before assigning to the GCLKGEN0 and disabling the previous clock source. The GCLK_IO does not have a status ready signal for an external input source. This can be achieved in software by counting clock pulses for a known time period (eg: using RTC or FREQM).

Note: The I/O pin (GCLK/IO[n]) must first be configured as a GCLK output by writing the corresponding 27. I/O Pin Controller (PORT) registers.

If GENCTRLn.OE is 0, the according I/O pin is set to an Output Off Value, which is selected by GENCTRLn.OOV: If GENCTRLn.OOV is '0', the output clock will be low. If this bit is '1', the output clock will be high.

In Standby mode, if the clock is output (GENCTRLn.OE=1), the clock on the I/O pin is frozen to the OOV value if the Run In Standby bit of the Generic Control register (GENCTRLn.RUNSTDBY) is zero. If GENCTRLn.RUNSTDBY is '1', the GCLKGEN clock is kept running and output to the I/O pin.

12.6.2.10 Peripheral Clock

Figure 12-4. Peripheral Clock

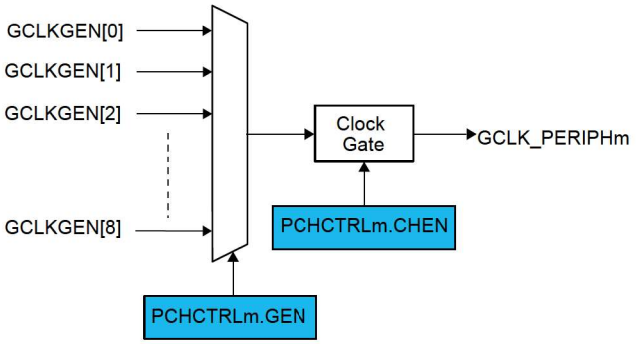

12.6.2.10.1 Enabling a Peripheral Clock

Before a Peripheral Clock is enabled, one of the Generators must be enabled (GENCTRLn.GENEN) and selected as source for the Peripheral Channel by setting the Generator Selection bits in the Peripheral Channel Control register (PCHCTRLm.GEN). Any available Generator can be selected as clock source for each Peripheral Channel. Refer to Table 12-9 for the mapping of the peripheral to index m.)

When a Generator has been selected, the peripheral clock is enabled by setting the Channel Enable bit in the Peripheral Channel Control register, PCHCTRLm.CHEN = 1. The PCHCTRLm.CHEN bit must be synchronized to the generic clock domain. PCHCTRLm.CHEN will continue to read as its previous state until the synchronization is complete.

12.6.2.10.2 Disabling a Peripheral Clock

A Peripheral Clock is disabled by writing PCHCTRLm.CHEN = 0. The PCHCTRLm.CHEN bit must be synchronized to the Generic Clock domain. PCHCTRLm.CHEN will stay in its previous state until the synchronization is complete. The Peripheral Clock is gated when disabled.

12.6.2.10.3 Selecting the Clock Source for a Peripheral

When changing a peripheral clock source by writing to PCHCTRLm.GEN, the peripheral clock must be disabled before re-enabling it with the new clock source setting. The following actions prevent glitches during the transition:

1. Disable the Peripheral Channel by writing PCHCTRLm.CHEN = 0.
2. Assert that PCHCTRLm.CHEN reads '0'.
3. Change the source of the Peripheral Channel by writing PCHCTRLm.GEN.
4. Re-enable the Peripheral Channel by writing PCHCTRLm.CHEN = 1.

12.6.2.10.4 Configuration Lock

The peripheral clock configuration can be locked for further write accesses by setting the Write Lock bit in the Peripheral Channel Control register PCHCTRLm.WRTLOCK = 1). After this, all writing to the PCHCTRLm register will be ignored. It can only be unlocked by a Power Reset.

The Generator source of a locked Peripheral Channel will be locked, too: The corresponding GENCTRLn register is locked, and can be unlocked only by a Power Reset.

This rule does not apply to Generator 0, as it is used as GCLK_MAIN, it cannot be locked. It is reset by any Reset and will start up in a known configuration. The software reset (CTRLA.SWRST) can not unlock the registers.

In case of an external Reset, the Generator source will be disabled. Even if the WRTLOCK bit is written to '1' the peripheral channels are disabled (PCHCTRLm.CHEN set to '0') until the Generator source is enabled again. Then, the PCHCTRLm.CHEN are set to '1' again.

12.6.2.11 Additional Features

12.6.2.11.1 Peripheral Clock Enable after Reset

The Generic Clock Controller must be able to provide a generic clock to some specific peripherals after a Reset. That means that the configuration of the Generators and Peripheral Channels after Reset is device-dependent.

Refer to GENCTRLn.SRC for details on GENCTRLn reset.

Refer to PCHCTRLm.SRC for details on PCHCTRLm reset.

12.6.2.12 Sleep Mode Operation

12.6.2.12.1 SleepWalking

The GCLK module supports the SleepWalking feature.

If the system is in a Sleep mode where the Generic Clocks are stopped, a peripheral that needs its clock in order to execute a process must first request it from the Generic Clock Controller.

The Generic Clock Controller receives this request, determines which Generic Clock Generator is involved and which clock source needs to be awakened. It then wakes up the respective clock source, enables the Generator and Peripheral Channel stages successively, and delivers the clock to the peripheral.

The RUNSTDBY bit in the Generator Control register controls clock output to pin during Standby Sleep mode. If the bit is cleared, the Generator output is not available on the pin. When set, the GCLK can continuously output the generator output to the GCLK_IO[n] pin. Refer to 12.6.2.9 External Clock for details.

12.6.2.12.2 Minimize Power Consumption in Standby

The following table identifies when a Clock Generator is off in Standby mode, minimizing the power consumption:

Table 12-2. Clock Generator n Activity in Standby Mode

Request for Clock n present	GENCTRLn.RUNSTDBY	GENCTRLn.OE	Clock Generator n
yes	-	-	active
no	1	1	active
no	1	0	OFF
no	0	1	OFF
no	0	0	OFF

12.6.2.12.3 Entering Standby Mode

There may occur a delay when the device is put into Standby mode, before the power is turned off. This delay is caused by running Clock Generators: if the Run in the Standby bit in the Generator Control register (GENCTRLn.RUNSTDBY) is '0', GCLK must verify that the clock is turned off. The duration of this verification is frequency-dependent.

12.6.2.13 Synchronization

Due to asynchronicity between the main clock domain and the peripheral clock domains, some registers must be synchronized when written or read.

An exception is the Channel Enable bit in the Peripheral Channel Control registers (PCHCTRLm.CHEN). When changing this bit, the bit value must be read-back to ensure the synchronization is complete and to assert glitch free internal operation. Note that changing the bit value under ongoing synchronization will *not* generate an error.

Synchronization is denoted by the "Read-Synchronized" and "Write-Synchronized" property in each individual register description.

For more details, refer to Register Synchronization.

12.7 Register Summary

Offset	Name	Bit Pos.	7	6	5	4	3	2	1	0
0x00	CTRLA	7:0								SWRST
0x01 ... 0x03	Reserved									
0x04	SYNCBUSY	7:0	GENCTRL5	GENCTRL4	GENCTRL3	GENCTRL2	GENCTRL1	GENCTRL0		SWRST
		15:8						GENCTRL8	GENCTRL7	GENCTRL6
		23:16								
		31:24								
0x08 ... 0x1F	Reserved									
0x20	GENCTRL0	7:0				SRC[4:0]				
		15:8			RUNSTDBY	DIVSEL	OE	OOV	IDC	GENEN
		23:16	DIV[7:0]							
		31:24	DIV[15:8]							
0x24	GENCTRL1	7:0				SRC[4:0]				
		15:8			RUNSTDBY	DIVSEL	OE	OOV	IDC	GENEN
		23:16	DIV[7:0]							
		31:24	DIV[15:8]							
0x28	GENCTRL2	7:0				SRC[4:0]				
		15:8			RUNSTDBY	DIVSEL	OE	OOV	IDC	GENEN
		23:16	DIV[7:0]							
		31:24	DIV[15:8]							
0x2C	GENCTRL3	7:0				SRC[4:0]				
		15:8			RUNSTDBY	DIVSEL	OE	OOV	IDC	GENEN
		23:16	DIV[7:0]							
		31:24	DIV[15:8]							
0x30	GENCTRL4	7:0				SRC[4:0]				
		15:8			RUNSTDBY	DIVSEL	OE	OOV	IDC	GENEN
		23:16	DIV[7:0]							
		31:24	DIV[15:8]							
0x34	GENCTRL5	7:0				SRC[4:0]				
		15:8			RUNSTDBY	DIVSEL	OE	OOV	IDC	GENEN
		23:16	DIV[7:0]							
		31:24	DIV[15:8]							
0x38	GENCTRL6	7:0				SRC[4:0]				
		15:8			RUNSTDBY	DIVSEL	OE	OOV	IDC	GENEN
		23:16	DIV[7:0]							
		31:24	DIV[15:8]							
0x3C	GENCTRL7	7:0				SRC[4:0]				
		15:8			RUNSTDBY	DIVSEL	OE	OOV	IDC	GENEN
		23:16	DIV[7:0]							
		31:24	DIV[15:8]							
0x40	GENCTRL8	7:0				SRC[4:0]				
		15:8			RUNSTDBY	DIVSEL	OE	OOV	IDC	GENEN
		23:16	DIV[7:0]							
		31:24	DIV[15:8]							
0x44 ... 0x7F	Reserved									
0x80	PCHCTRL0	7:0	WRTLOCK	CHEN			GEN[3:0]			
		15:8								
		23:16								
		31:24								
...										

.....continued

Offset	Name	Bit Pos.	7	6	5	4	3	2	1	0
0x0108	PCHCTRL34	7:0	WRTLOCK	CHEN			GEN[3:0]			
		15:8								
		23:16								
		31:24								

12.7.1 Control A

Name: CTRLA
Offset: 0x00
Reset: 0x00
Property: PAC Write-Protection, Write-Synchronized Bits

Bit	7	6	5	4	3	2	1	0
								SWRST
Access								R/W
Reset								0

Bit 0 – SWRST Software Reset
Writing a zero to this bit has no effect.
Setting this bit to '1' will reset all registers in the GCLK to their initial state after a Power Reset, except for generic clocks and associated Generators that have their WRTLOCK bit in PCHCTRLm set to '1'.
Refer to GENCTRL Reset Value for details on GENCTRLn register reset.
Refer to PCHCTRL Reset Value for details on PCHCTRLm register reset.
Note: CTRLA.SWRST is a write-synchronized bit: SYNCBUSY.SWRST must be checked to ensure the CTRLA.SWRST synchronization is complete.

Value	Description
0	There is no Reset operation ongoing.
1	A Reset operation is ongoing.

12.7.2 Synchronization Busy

Name: SYNCBUSY
Offset: 0x04
Reset: 0x00000000
Property: –

Bit	31	30	29	28	27	26	25	24
Access								
Reset								

Bit	23	22	21	20	19	18	17	16
Access								
Reset								

Bit	15	14	13	12	11	10	9	8
						GENCTRL8	GENCTRL7	GENCTRL6
Access						R	R	R
Reset						0	0	0

Bit	7	6	5	4	3	2	1	0
	GENCTRL5	GENCTRL4	GENCTRL3	GENCTRL2	GENCTRL1	GENCTRL0		SWRST
Access	R	R	R	R	R	R		R
Reset	0	0	0	0	0	0		0

Bits 2, 3, 4, 5, 6, 7, 8, 9, 10 – GENCTRLx Generator Control n Synchronization Busy [x = 8..0]
This bit is cleared when the synchronization of the Generator Control n register (GENCTRLn) between clock domains is complete, or when clock switching operation is complete.
This bit is set when the synchronization of the Generator Control n register (GENCTRLn) between clock domains is started.

Bit 0 – SWRST Software Reset Synchronization Busy
This bit is cleared when the synchronization of the CTRLA.SWRST register bit between clock domains is complete.
This bit is set when the synchronization of the CTRLA.SWRST register bit between clock domains is started.

12.7.3 Generator Control

Name: GENCTRLn
Offset: 0x20 + n*0x04 [n=0..8]
Reset: 0x00000106 for GENCTRL0, 0x00000000 for others
Property: -

GENCTRLn controls the settings of Generic Generator n (n=0..8). The reset value is 0x00000106 for Generator n=0, else 0x00000000

Note: GENCTRLn is a write-synchronized register: SYNCBUSY.GENCTRLn must be checked to ensure the GENCTRLn synchronization is complete.

Bit	31	30	29	28	27	26	25	24
	DIV[15:8]							
Access	R/W	R/W	R/W	R/W	R/W	R/W	R/W	R/W
Reset	0	0	0	0	0	0	0	0

Bit	23	22	21	20	19	18	17	16
	DIV[7:0]							
Access	R/W	R/W	R/W	R/W	R/W	R/W	R/W	R/W
Reset	0	0	0	0	0	0	0	0

Bit	15	14	13	12	11	10	9	8
			RUNSTDBY	DIVSEL	OE	OOV	IDC	GENEN
Access			R/W	R/W	R/W	R/W	R/W	R/W
Reset			0	0	0	0	0	x

Bit	7	6	5	4	3	2	1	0
				SRC[4:0]				
Access				R/W	R/W	R/W	R/W	R/W
Reset				0	0	0	0	x

Bits 31:16 – DIV[15:0] Division Factor
These bits represent a division value for the corresponding Generator. The actual division factor used is dependent on the state of DIVSEL. The number of relevant DIV bits for each Generator can be seen in this table. Written bits outside of the specified range will be ignored.

Table 12-3. Division Factor Bits

Generic Clock Generator	Division Factor Bits
Generator 0	8 division factor bits - DIV[7:0]
Generator 1	16 division factor bits - DIV[15:0]
Generator 2-8	8 division factor bits - DIV[7:0]

Bit 13 – RUNSTDBY Run in Standby
This bit is used to keep the Generator running in Standby as long as it is configured to output to a dedicated GCLK_IO pin. If GENCTRLn.OE is zero, this bit has no effect and the generator will only be running if a peripheral requires the clock.

Value	Description
0	The Generator is stopped in Standby and the GCLK_IO pin state (one or zero) will be dependent on the setting in GENCTRL.OOV.
1	The Generator is kept running and output to its dedicated GCLK_IO pin during Standby mode.

Bit 12 – DIVSEL Divide Selection
This bit determines how the division factor of the clock source of the Generator will be calculated from DIV. If the clock source should not be divided, DIVSEL must be 0 and the GENCTRLn.DIV value must be either 0 or 1.

Value	Description
0	The Generator clock frequency equals the clock source frequency divided by GENCTRLn.DIV.
1	The Generator clock frequency equals the clock source frequency divided by 2^(GENCTRLn.DIV+1).

Bit 11 – OE Output Enable
This bit is used to output the Generator clock output to the corresponding pin (GCLK_IO), as long as GCLK_IO is not defined as the Generator source in the GENCTRLn.SRC bit field. This feature only applies to GCLK Clock Generators 0 to 7. (GCLK Generator 8 does not have a GCLK_IO pin)

Value	Description
0	No Generator clock signal on pin GCLK_IO.
1	The Generator clock signal is output on the corresponding GCLK_IO, unless GCLK_IO is selected as a generator source in the GENCTRLn.SRC bit field.

Bit 10 – OOV Output Off Value
This bit is used to control the clock output value on pin (GCLK_IO) when the Generator is turned off or the OE bit is zero, as long as GCLK_IO is not defined as the Generator source in the GENCTRLn.SRC bit field. This feature only applies to GCLK Clock Generators 0 to 7. (GCLK Generator 8 does not have a GCLK_IO pin)

Value	Description
0	The GCLK_IO will be LOW when generator is turned off or when the OE bit is zero.
1	The GCLK_IO will be HIGH when generator is turned off or when the OE bit is zero.

Bit 9 – IDC Improve Duty Cycle
This bit is used to improve the duty cycle of the Generator output to 50/50 for odd division factors.

Value	Description
0	Generator output clock duty cycle is not balanced to 50/50 for odd division factors.
1	Generator output clock duty cycle is 50/50.

Bit 8 – GENEN Generator Enable
This bit is used to enable and disable the Generator.

Value	Description
0	Generator is disabled.
1	Generator is enabled.

Bits 4:0 – SRC[4:0] Generator Clock Source Selection
These bits select the Generator clock source, as shown in this table.

Table 12-4. Generator Clock Source Selection

Value	Name	Description
0x0	XOSC	XOSC oscillator output
0x1	GCLKIN	Generator input pad (GCLK_IO)
0x2	GCLKGEN1	Generic clock generator 1 output
0x3	OSCULP32K	OSCULP32K oscillator output
0x4	OSC32K	OSC32K oscillator output
0x5	XOSC32K	XOSC32K oscillator output
0x6	OSC48M	OSC48M oscillator output
0x7	FDPLL96M	DPLL96M output
0x8-0x1F	Reserved	-

A Power Reset will reset all GENCTRLn registers. the Reset values of the GENCTRLn registers are shown in table below.

Table 12-5. GENCTRLn Reset Value after a Power Reset

GCLK Generator	Reset Value after a Power Reset
0	0x00000106
others	0x00000000

A User Reset will reset the associated GENCTRL register unless the Generator is the source of a locked Peripheral Channel (PCHCTRLm.WRTLOCK=1). The reset values of the GENCTRL register are as shown in the table below.

Table 12-6. GENCTRLn Reset Value after a User Reset

GCLK Generator	Reset Value after a User Reset
0	0x00000106
others	No change if the generator is used by a Peripheral Channel m with PCHCTRLm.WRTLOCK=1 else 0x00000000

12.7.4 Peripheral Channel Control

Name: PCHCTRLm
Offset: 0x80 + m*0x04 [m=0..34]
Reset: 0x00000000
Property: PAC Write-Protection

PCHTRLm controls the settings of Peripheral Channel number m (m=0..34).

Bit	31	30	29	28	27	26	25	24
Access								
Reset								

Bit	23	22	21	20	19	18	17	16
Access								
Reset								

Bit	15	14	13	12	11	10	9	8
Access								
Reset								

Bit	7	6	5	4	3	2	1	0
	WRTLOCK	CHEN			GEN[3:0]			
Access	R/W	R/W			R/W	R/W	R/W	R/W
Reset	0	0			0	0	0	0

Bit 7 – WRTLOCK Write Lock
After this bit is set to '1', further writes to the PCHCTRLm register will be discarded. The control register of the corresponding Generator n (GENCTRLn), as assigned in PCHCTRLm.GEN, will also be locked. It can only be unlocked by a Power Reset.
Note that Generator 0 cannot be locked.

Value	Description
0	The Peripheral Channel register and the associated Generator register are not locked
1	The Peripheral Channel register and the associated Generator register are locked

Bit 6 – CHEN Channel Enable
This bit is used to enable and disable a Peripheral Channel.

Value	Description
0	The Peripheral Channel is disabled
1	The Peripheral Channel is enabled

Bits 3:0 – GEN[3:0] Generator Selection
This bit field selects the Generator to be used as the source of a peripheral clock, as shown in the table below:

Table 12-7. Generator Selection

Value	Description
0x0	Generic Clock Generator 0
0x1	Generic Clock Generator 1
0x2	Generic Clock Generator 2
0x3	Generic Clock Generator 3
0x4	Generic Clock Generator 4
0x5	Generic Clock Generator 5
0x6	Generic Clock Generator 6

.....continued	
Value	**Description**
0x7	Generic Clock Generator 7
0x8	Generic Clock Generator 8
0x9 - 0xF	Reserved

Table 12-8. Reset Value after a User Reset or a Power Reset

Reset	PCHCTRLm.GEN	PCHCTRLm.CHEN	PCHCTRLm.WRTLOCK
Power Reset	0x0	0x0	0x0
User Reset	If WRTLOCK = 0 : 0x0 If WRTLOCK = 1: no change	If WRTLOCK = 0 : 0x0 If WRTLOCK = 1: no change	No change

A Power Reset will reset all the PCHCTRLm registers.
A User Reset will reset a PCHCTRL if WRTLOCK=0, or else, the content of that PCHCTRL remains unchanged.
PCHCTRL register Reset values are shown in the table PCHCTRLm Mapping.

Table 12-9. PCHCTRLm Mapping

index(m)	Name	Description
0	GCLK_DPLL	FDPLL96M input clock source for reference
1	GCLK_DPLL_32K	FDPLL96M 32kHz clock for FDPLL96M internal lock timer
2	GCLK_EIC	EIC
3	GCLK_FREQM_MSR	FREQM Measure
4	GCLK_FREQM_REF	FREQM Reference
5	GCLK_TSENS	TSENS
6	GCLK_EVSYS_CHANNEL_0	EVSYS_CHANNEL_0
7	GCLK_EVSYS_CHANNEL_1	EVSYS_CHANNEL_1
8	GCLK_EVSYS_CHANNEL_2	EVSYS_CHANNEL_2
9	GCLK_EVSYS_CHANNEL_3	EVSYS_CHANNEL_3
10	GCLK_EVSYS_CHANNEL_4	EVSYS_CHANNEL_4
11	GCLK_EVSYS_CHANNEL_5	EVSYS_CHANNEL_5
12	GCLK_EVSYS_CHANNEL_6	EVSYS_CHANNEL_6
13	GCLK_EVSYS_CHANNEL_7	EVSYS_CHANNEL_7
14	GCLK_EVSYS_CHANNEL_8	EVSYS_CHANNEL_8
15	GCLK_EVSYS_CHANNEL_9	EVSYS_CHANNEL_9
16	GCLK_EVSYS_CHANNEL_10	EVSYS_CHANNEL_10
17	GCLK_EVSYS_CHANNEL_11	EVSYS_CHANNEL_11
18	GCLK_SERCOM[0:3]_SLOW	SERCOM[0:3]_SLOW
19	GCLK_SERCOM0_CORE	SERCOM0_CORE
20	GCLK_SERCOM1_CORE	SERCOM1_CORE
21	GCLK_SERCOM2_CORE	SERCOM2_CORE
22	GCLK_SERCOM3_CORE	SERCOM3_CORE
23	GCLK_TCC0, GCLK_TCC1	TCC0,TCC1
24	GCLK_TCC2	TCC2
25	GCLK_TC0, GCLK_TC1	TC0,TC1
26	GCLK_TC2, GCLK_TC3	TC2,TC3
27	GCLK_TC4	TC4
28	GCLK_ADC0	ADC0
29	GCLK_ADC1	ADC1
30	GCLK_SDADC	SDADC
31	GCLK_DAC	DAC
32	GCLK_CCL	CCL
33	GCLK_AC	AC
34	GCLK_PDEC	PDEC

13. Main Clock (MCLK)

13.1 Overview

The Main Clock (MCLK) controls the synchronous clock generation of the device.

Using a clock provided by the Generic Clock Module (GCLK_MAIN), the Main Clock Controller provides synchronous system clocks to the CPU and the modules connected to the AHBx and the APBx buses. The synchronous system clocks are divided into a number of clock domains. Each clock domain can run at different frequencies, enabling the user to save power by running peripherals at a relatively low clock frequency, while maintaining high CPU performance or vice versa. In addition, the clock can be masked for individual modules, enabling the user to minimize power consumption.

13.2 Features

- Generates CPU, AHB, and APB system clocks
  - Clock source and division factor from GCLK
  - Clock prescaler with 1x to 128x division
- Safe run-time clock switching from GCLK
- Module-level clock gating through maskable peripheral clocks

13.3 Block Diagram

Figure 13-1. MCLK Block Diagram

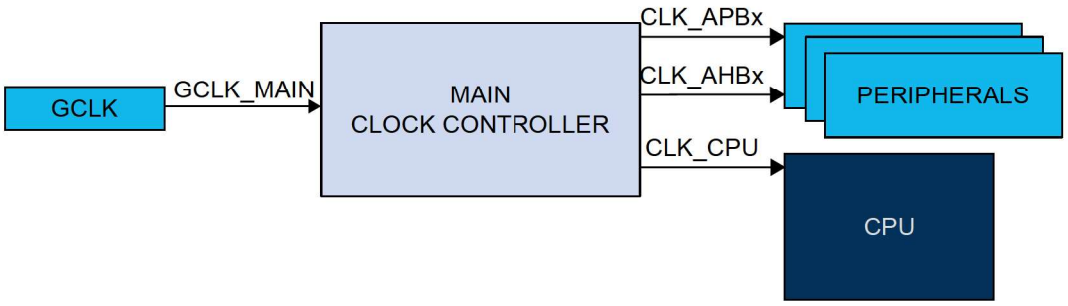

13.4 Peripheral Dependencies

Peripheral	Base Address	IRQ	AHB CLK	APB CLK	Generic CLK	PAC		Events		DMA	Sleep Walking
			Enabled at reset	Enabled at reset	Index	Index	Prot at reset	User	Generator	Index	
MCLK	0x40000800	0	-	Y	-	2	N	-	-	-	Y

13.5 Functional Description

13.5.1 Principle of Operation

The GCLK_MAIN clock signal from the GCLK module is the source for the main clock, which in turn is the common root for the synchronous clocks for the CPU, APBx, and AHBx modules. The GCLK_MAIN is divided by an 8-bit prescaler. Each of the derived clocks can run from any divided or undivided main clock, ensuring synchronous clock sources for each clock domain. The clock domain (CPU) can be changed on the fly to respond to variable load in the application. The clocks for each module in a clock domain can be masked individually to avoid power consumption in inactive modules. Depending on the Sleep mode, some clock domains can be turned off.

13.5.2 Basic Operation

13.5.2.1 Initialization

After a Reset, the default clock source of the GCLK_MAIN clock is started and calibrated before the CPU starts running. The GCLK_MAIN clock is selected as the main clock without any prescaler division.

By default, only the necessary clocks are enabled.

13.5.2.2 Enabling, Disabling, and Resetting

The MCLK module is always enabled and cannot be reset.

13.5.2.3 Selecting the Main Clock Source

Refer to the Generic Clock Controller description for details on how to configure the clock source of the GCLK_MAIN clock.

13.5.2.4 Selecting the Synchronous Clock Division Ratio

The main clock GCLK_MAIN feeds an 8-bit prescaler, which can be used to generate the synchronous clocks. By default, the synchronous clocks run on the undivided main clock. The user can select a prescaler division for the CPU clock domain by writing the Division (DIV) bits in the CPU Clock Division register CPUDIV, resulting in a CPU clock domain frequency determined by this equation:

$$f_{CPU} = \frac{f_{main}}{CPUDIV}$$

If the application attempts to write forbidden values in the CPUDIV register, the register is written but these bad values are not used and a violation is reported to the PAC module.

Division bits (DIV) can be written without halting or disabling peripheral modules. Writing DIV bits allows a new clock setting to be written to all synchronous clocks belonging to the corresponding clock domain at the same time.

Figure 13-2. Synchronous Clock Selection and Prescaler

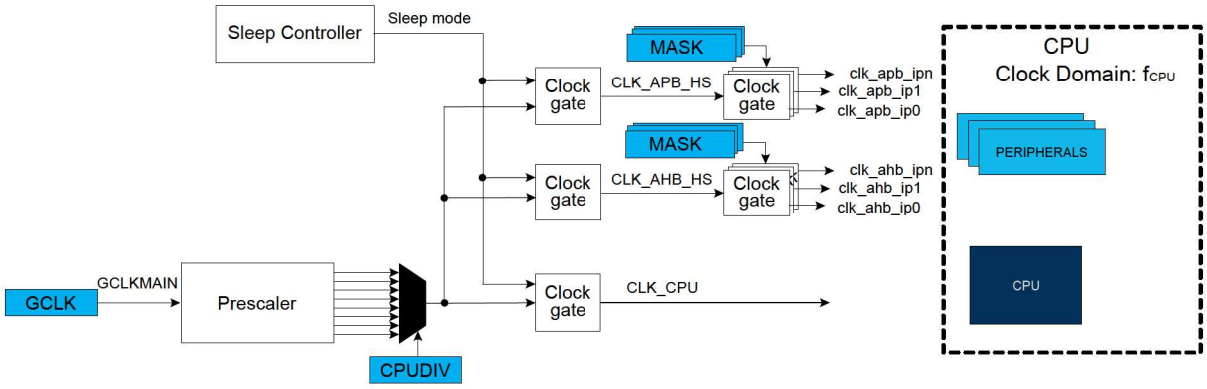

13.5.2.5 Clock Ready Flag

There is a slight delay between writing to CPUDIV until the new clock settings become effective.

During this interval, the Clock Ready flag in the Interrupt Flag Status and Clear register (INTFLAG.CKRDY) will return zero when read. If CKRDY in the INTENSET register is set to '1', the Clock Ready interrupt will be triggered when the

new clock setting is effective. The clock settings (CLKCFG) must not be re-written while INTFLAG.CKRDY reads '0'. The system may become unstable or hang, and a violation is reported to the PAC module.

13.5.2.6 Peripheral Clock Masking

It is possible to disable/enable the AHB or APB clock for a peripheral by writing the corresponding bit in the Clock Mask registers (AHBMASK and APBxMASK) to '0'/'1'. The default state of the peripheral clocks is given by the peripheral bit reset value in AHBMASK and APBxMASK registers.

When the APB clock is not provided to a module, its registers cannot be read or written. The module can be re-enabled later by writing the corresponding mask bit to '1'.

A module may be connected to several clock domains (for instance, AHB and APB), in which case it will have several mask bits.

Clocks must be switched off only if it is certain that the module will not be used: Switching off the clock for the NVM Controller (NVMCTRL) will cause a problem if the CPU needs to read from the Flash memory. Switching off the clock to the MCLK module (which contains the mask registers) or the corresponding APBx bridge, will make it impossible to write the mask registers again. In this case, they can only be re-enabled by a system reset.

13.5.3 Interrupts

The peripheral has the following interrupt sources:

- Clock Ready (CKRDY): indicates that CPU clocks are ready. This interrupt is a synchronous wake-up source.

Each interrupt source has an interrupt flag associated with it. The interrupt flag in the Interrupt Flag Status and Clear (13.6.3 INTFLAG) register is set when the interrupt condition occurs. Each interrupt can be enabled individually by writing a '1' to the corresponding enabling bit in the Interrupt Enable Set (INTENSET) register, and disabled by writing a '1' to the corresponding clearing bit in the Interrupt Enable Clear (INTENCLR) register.

An interrupt request is generated when the interrupt flag is set and the corresponding interrupt is enabled. The interrupt request remains active until the interrupt flag is cleared, the interrupt is disabled or the peripheral is reset. An interrupt flag is cleared by writing a '1' to the corresponding bit in the 13.6.3 INTFLAG register. Each peripheral can have one interrupt request line per interrupt source or one common interrupt request line for all the interrupt sources. If the peripheral has one common interrupt request line for all the interrupt sources, the user must read the 13.6.3 INTFLAG register to determine which interrupt condition is present.

13.5.4 Sleep Mode Operation

In Idle Sleep mode, the MCLK is still running on the selected main clock.

In Standby Sleep mode, the MCLK is frozen if no synchronous clock is required.

13.6 Register Summary

Offset	Name	Bit Pos.	7	6	5	4	3	2	1	0
0x00	Reserved									
0x01	INTENCLR	7:0								CKRDY
0x02	INTENSET	7:0								CKRDY
0x03	INTFLAG	7:0								CKRDY
0x04	CPUDIV	7:0	CPUDIV[7:0]							
0x05 ... 0x0F	Reserved									
0x10	AHBMASK	7:0	DMAC	HSRAM	NVMCTRL	HMATRIXHS	DSU	APBC	APBB	APBA
		15:8						DIVAS		PAC
		23:16								
		31:24								
0x14	APBAMASK	7:0	GCLK	SUPC	OSC32KCTRL	OSCCTRL	RSTC	MCLK	PM	PAC
		15:8				TSENS	FREQM	EIC	RTC	WDT
		23:16								
		31:24								
0x18	APBBMASK	7:0			HMATRIXHS			NVMCTRL	DSU	PORT
		15:8								
		23:16								
		31:24								
0x1C	APBCMASK	7:0				SERCOM3	SERCOM2	SERCOM1	SERCOM0	EVSYS
		15:8	TC3	TC2	TC1	TC0	TCC2	TCC1	TCC0	
		23:16	CCL		DAC	AC	SDADC	ADC1	ADC0	TC4
		31:24						PDEC		

13.6.1 Interrupt Enable Clear

Name: INTENCLR
Offset: 0x01
Reset: 0x00
Property: PAC Write-Protection

This register allows the user to disable an interrupt without doing a read-modify-write operation. Changes in this register will also be reflected in the Interrupt Enable Set (INTENSET) register.

Bit	7	6	5	4	3	2	1	0
								CKRDY
Access								R/W
Reset								0

Bit 0 – CKRDY Clock Ready Interrupt Enable
Writing a '0' to this bit has no effect.
Writing a '1' to this bit will clear the Clock Ready Interrupt Enable bit and the corresponding interrupt request.

Value	Description
0	The Clock Ready interrupt is enabled and will generate an interrupt request when the Clock Ready Interrupt Flag is set.
1	The Clock Ready interrupt is disabled.

13.6.2 Interrupt Enable Set

Name: INTENSET
Offset: 0x02
Reset: 0x00
Property: PAC Write-Protection

This register allows the user to enable an interrupt without doing a read-modify-write operation. Changes in this register will also be reflected in the Interrupt Enable Clear (INTENCLR) register.

Bit	7	6	5	4	3	2	1	0
								CKRDY
Access								R/W
Reset								0

Bit 0 – CKRDY Clock Ready Interrupt Enable
Writing a '0' to this bit has no effect.
Writing a '1' to this bit will set the Clock Ready Interrupt Enable bit and enable the Clock Ready interrupt.

Value	Description
0	The Clock Ready interrupt is disabled.
1	The Clock Ready interrupt is enabled.

13.6.3 Interrupt Flag Status and Clear

Name: INTFLAG
Offset: 0x03
Reset: 0x01
Property: –

Bit	7	6	5	4	3	2	1	0
								CKRDY
Access								R/W
Reset								1

Bit 0 – CKRDY Clock Ready
This flag is set when the synchronous CPU, APBx, and AHBx clocks have frequencies as indicated in the CLKCFG registers and will generate an interrupt if INTENCLR/SET.CKRDY is '1'.
Writing a '0' to this bit has no effect.
Writing a '1' to this bit clears the Clock Ready interrupt flag.

13.6.4 CPU Clock Division

Name: CPUDIV
Offset: 0x04
Reset: 0x01
Property: PAC Write-Protection

Bit	7	6	5	4	3	2	1	0
	CPUDIV[7:0]							
Access	R/W	R/W	R/W	R/W	R/W	R/W	R/W	R/W
Reset	0	0	0	0	0	0	0	1

Bits 7:0 – CPUDIV[7:0] CPU Clock Division Factor
These bits define the division ratio of the main clock prescaler related to the CPU clock domain.
Frequencies must never exceed the specified maximum frequency for each clock domain.

Value	Name	Description
0x01	DIV1	Divide by 1
0x02	DIV2	Divide by 2
0x04	DIV4	Divide by 4
0x08	DIV8	Divide by 8
0x10	DIV16	Divide by 16
0x20	DIV32	Divide by 32
0x40	DIV64	Divide by 64
0x80	DIV128	Divide by 128
others	-	Reserved

13.6.5 AHB Mask

Name: AHBMASK
Offset: 0x10
Reset: 0x0000005FF
Property: PAC Write-Protection

Bit	31	30	29	28	27	26	25	24
Access								
Reset								

Bit	23	22	21	20	19	18	17	16
Access								
Reset								

Bit	15	14	13	12	11	10	9	8
						DIVAS		PAC
Access						R/W		R/W
Reset						1		1

Bit	7	6	5	4	3	2	1	0
	DMAC	HSRAM	NVMCTRL	HMATRIXHS	DSU	APBC	APBB	APBA
Access	R/W	R/W	R/W	R/W	R/W	R/W	R/W	R/W
Reset	1	1	1	1	1	1	1	1

Bit 10 – DIVAS DIVAS AHB Clock Enable

Value	Description
0	The AHB clock for the DIVAS is stopped.
1	The AHB clock for the DIVAS is enabled.

Bit 8 – PAC PAC AHB Clock Enable

Value	Description
0	The AHB clock for the PAC is stopped.
1	The AHB clock for the PAC is enabled.

Bit 7 – DMAC DMAC AHB Clock Enable

Value	Description
0	The AHB clock for the DMAC is stopped.
1	The AHB clock for the DMAC is enabled.

Bit 6 – HSRAM HSRAM AHB Clock Enable

Value	Description
0	The AHB clock for the HSRAM is stopped.
1	The AHB clock for the HSRAM is enabled.

Bit 5 – NVMCTRL NVMCTRL AHB Clock Enable

Value	Description
0	The AHB clock for the NVMCTRL is stopped.
1	The AHB clock for the NVMCTRL is enabled.

Bit 4 – HMATRIXHS HMATRIXHS AHB Clock Enable

Value	Description
0	The AHB clock for the HMATRIXHS is stopped.

Value	Description
1	The AHB clock for the HMATRIXHS is enabled.

Bit 3 – DSU DSU AHB Clock Enable

Value	Description
0	The AHB clock for the DSU is stopped.
1	The AHB clock for the DSU is enabled.

Bit 2 – APBC APBC AHB Clock Enable

Value	Description
0	The AHB clock for the APBC is stopped.
1	The AHB clock for the APBC is enabled

Bit 1 – APBB APBB AHB Clock Enable

Value	Description
0	The AHB clock for the APBB is stopped.
1	The AHB clock for the APBB is enabled.

Bit 0 – APBA APBA AHB Clock Enable

Value	Description
0	The AHB clock for the APBA is stopped.
1	The AHB clock for the APBA is enabled.

13.6.6 APBA Mask

Name: APBAMASK
Offset: 0x14
Reset: 0x00000FFF
Property: PAC Write-Protection

Bit	31	30	29	28	27	26	25	24
Access								
Reset								

Bit	23	22	21	20	19	18	17	16
Access								
Reset								

Bit	15	14	13	12	11	10	9	8
				TSENS	FREQM	EIC	RTC	WDT
Access				R/W	R/W	R/W	R/W	R/W
Reset				0	1	1	1	1

Bit	7	6	5	4	3	2	1	0
	GCLK	SUPC	OSC32KCTRL	OSCCTRL	RSTC	MCLK	PM	PAC
Access	R/W	R/W	R/W	R/W	R/W	R/W	R/W	R/W
Reset	1	1	1	1	1	1	1	1

Bit 12 – TSENS TSENS APBA Clock Enable

Value	Description
0	The APBA clock for the TSENS is disabled.
1	The APBA clock for the TSENS is enabled.

Bit 11 – FREQM FREQM APBA Clock Enable

Value	Description
0	The APBA clock for the FREQM is disabled.
1	The APBA clock for the FREQM is enabled.

Bit 10 – EIC EIC APBA Clock Enable

Value	Description
0	The APBA clock for the EIC is disabled.
1	The APBA clock for the EIC is enabled.

Bit 9 – RTC RTC APBA Clock Enable

Value	Description
0	The APBA clock for the RTC is disabled.
1	The APBA clock for the RTC is enabled.

Bit 8 – WDT WDT APBA Clock Enable

Value	Description
0	The APBA clock for the WDT is disabled.
1	The APBA clock for the WDT is enabled.

Bit 7 – GCLK GCLK APBA Clock Enable

Value	Description
0	The APBA clock for the GCLK is disabled.

Value	Description
1	The APBA clock for the GCLK is enabled.

Bit 6 – SUPC SUPC APBA Clock Enable

Value	Description
0	The APBA clock for the SUPC is disabled.
1	The APBA clock for the SUPC is enabled.

Bit 5 – OSC32KCTRL OSC32KCTRL APBA Clock Enable

Value	Description
0	The APBA clock for the OSC32KCTRL is disabled.
1	The APBA clock for the OSC32KCTRL is enabled.

Bit 4 – OSCCTRL OSCCTRL APBA Clock Enable

Value	Description
0	The APBA clock for the OSCCTRL is disabled.
1	The APBA clock for the OSCCTRL is enabled.

Bit 3 – RSTC RSTC APBA Clock Enable

Value	Description
0	The APBA clock for the RSTC is disabled.
1	The APBA clock for the RSTC is enabled.

Bit 2 – MCLK MCLK APBA Clock Enable

Value	Description
0	The APBA clock for the MCLK is disabled.
1	The APBA clock for the MCLK is enabled.

Bit 1 – PM PM APBA Clock Enable

Value	Description
0	The APBA clock for the PM is disabled.
1	The APBA clock for the PM is enabled.

Bit 0 – PAC PAC APBA Clock Enable

Value	Description
0	The APBA clock for the PAC is disabled.
1	The APBA clock for the PAC is enabled.

13.6.7 APBB Mask

Name: APBBMASK
Offset: 0x18
Reset: 0x00000007
Property: PAC Write-Protection

Bit	31	30	29	28	27	26	25	24
Access								
Reset								

Bit	23	22	21	20	19	18	17	16
Access								
Reset								

Bit	15	14	13	12	11	10	9	8
Access								
Reset								

Bit	7	6	5	4	3	2	1	0
			HMATRIXHS			NVMCTRL	DSU	PORT
Access			R/W			R/W	R/W	R/W
Reset			0			1	1	1

Bit 5 – HMATRIXHS HMATRIXHS APBB Clock Enable

Value	Description
0	The APBB clock for the HMATRIXHS is stopped
1	The APBB clock for the HMATRIXHS is enabled

Bit 2 – NVMCTRL NVMCTRL APBB Clock Enable

Value	Description
0	The APBB clock for the NVMCTRL is stopped
1	The APBB clock for the NVMCTRL is enabled

Bit 1 – DSU DSU APBB Clock Enable

Value	Description
0	The APBB clock for the DSU is stopped
1	The APBB clock for the DSU is enabled

Bit 0 – PORT PORT APBB Clock Enable

Value	Description
0	The APBB clock for the PORT is stopped.
1	The APBB clock for the PORT is enabled.

13.6.8 APBC Mask

Name: APBCMASK
Offset: 0x1C
Reset: 0x00000000
Property: PAC Write-Protection

Bit	31	30	29	28	27	26	25	24
						PDEC		
Access						R/W		
Reset						0		

Bit	23	22	21	20	19	18	17	16
	CCL		DAC	AC	SDADC	ADC1	ADC0	TC4
Access	R/W		R/W	R/W	R/W	R/W	R/W	R/W
Reset	0		0	0	0	0	0	0

Bit	15	14	13	12	11	10	9	8
	TC3	TC2	TC1	TC0	TCC2	TCC1	TCC0	
Access	R/W	R/W	R/W	R/W	R/W	R/W	R/W	
Reset	0	0	0	0	0	0	0	

Bit	7	6	5	4	3	2	1	0
				SERCOM3	SERCOM2	SERCOM1	SERCOM0	EVSYS
Access				R/W	R/W	R/W	R/W	R/W
Reset				0	0	0	0	0

Bit 26 – PDEC PDEC APBC Clock Enable

Value	Description
0	The APBC clock for the PDEC is stopped.
1	The APBC clock for the PDEC is enabled.

Bit 23 – CCL CCL APBC Clock Enable

Value	Description
0	The APBC clock for the CCL is stopped.
1	The APBC clock for the CCL is enabled.

Bit 21 – DAC DAC APBC Mask Clock Enable

Value	Description
0	The APBC clock for the DAC is stopped.
1	The APBC clock for the DAC is enabled.

Bit 20 – AC AC APBC Mask Clock Enable

Value	Description
0	The APBC clock for the AC is stopped.
1	The APBC clock for the AC is enabled.

Bit 19 – SDADC SDADC APBC Clock Enable

Value	Description
0	The APBC clock for the SDADC is stopped.
1	The APBC clock for the SDADC is enabled.

Bit 18 – ADC1 ADC1 APBC Clock Enable

Value	Description
0	The APBC clock for the ADC1 is stopped.

Value	Description
1	The APBC clock for the ADC1 is enabled.

Bit 17 – ADC0 ADC0 APBC Clock Enable

Value	Description
0	The APBC clock for the ADC0 is stopped.
1	The APBC clock for the ADC0 is enabled.

Bit 16 – TC4 TC4 APBC Mask Clock Enable

Value	Description
0	The APBC clock for the TC4 is stopped.
1	The APBC clock for the TC4 is enabled.

Bit 15 – TC3 TC3 APBC Mask Clock Enable

Value	Description
0	The APBC clock for the TC3 is stopped.
1	The APBC clock for the TC3 is enabled.

Bit 14 – TC2 TC2 APBC Mask Clock Enable

Value	Description
0	The APBC clock for the TC2 is stopped.
1	The APBC clock for the TC2 is enabled.

Bit 13 – TC1 TC1 APBC Mask Clock Enable

Value	Description
0	The APBC clock for the TC1 is stopped.
1	The APBC clock for the TC1 is enabled.

Bit 12 – TC0 TC0 APBC Mask Clock Enable

Value	Description
0	The APBC clock for the TC0 is stopped.
1	The APBC clock for the TC0 is enabled.

Bit 11 – TCC2 TCC2 APBC Mask Clock Enable

Value	Description
0	The APBC clock for the TCC2 is stopped.
1	The APBC clock for the TCC2 is enabled.

Bit 10 – TCC1 TCC1 APBC Mask Clock Enable

Value	Description
0	The APBC clock for the TCC1 is stopped.
1	The APBC clock for the TCC1 is enabled.

Bit 9 – TCC0 TCC0 APBC Mask Clock Enable

Value	Description
0	The APBC clock for the TCC0 is stopped.
1	The APBC clock for the TCC0 is enabled.

Bit 4 – SERCOM3 SERCOM3 APBC Mask Clock Enable

Value	Description
0	The APBC clock for the SERCOM3 is stopped.
1	The APBC clock for the SERCOM3 is enabled.

Bit 3 – SERCOM2 SERCOM2 APBC Mask Clock Enable

Value	Description
0	The APBC clock for the SERCOM2 is stopped.

Value	Description
1	The APBC clock for the SERCOM2 is enabled.

Bit 2 – SERCOM1 SERCOM1 APBC Mask Clock Enable

Value	Description
0	The APBC clock for the SERCOM1 is stopped.
1	The APBC clock for the SERCOM1 is enabled.

Bit 1 – SERCOM0 SERCOM0 APBC Mask Clock Enable

Value	Description
0	The APBC clock for the SERCOM0 is stopped.
1	The APBC clock for the SERCOM0 is enabled.

Bit 0 – EVSYS EVSYS APBC Clock Enable

Value	Description
0	The APBC clock for the EVSYS is stopped.
1	The APBC clock for the EVSYS is enabled.

14. Oscillators Controller (OSCCTRL)

14.1 Overview

The Oscillators Controller (OSCCTRL) provides a user interface to the XOSC, OSC48M and FDPLL96M modules, refer to the OSC32KCTRL chapter for the user interface to the 32.768 kHz oscillators.

Through the interface registers, it is possible to enable, disable, calibrate, and monitor the OSCCTRL oscillators.

All oscillators statuses are collected in the Status register (STATUS). They can additionally trigger interrupts upon status changes through the INTENSET, INTENCLR, and INTFLAG registers.

14.2 Features

- 0.4-32 MHz Crystal Oscillator (XOSC)
  - Tunable gain control
  - Programmable start-up time
  - Crystal or external input clock on XIN I/O
  - Clock failure detection with safe clock switch
  - Clock failure event output
- 48 MHz Internal Oscillator (OSC48M)
  - Fast start-up
  - Programmable start-up time
  - 4-bit linear divider available
- Fractional Digital Phase Locked Loop (FDPLL96M)
  - 48 MHz to 96 MHz output frequency
  - 32 kHz to 2 MHz reference clock
  - A selection of sources for the reference clock
  - Adjustable proportional integral controller
  - Fractional part used to achieve 1/16th of reference clock step

14.3 Block Diagram

Figure 14-1. OSCCTRL Block Diagram

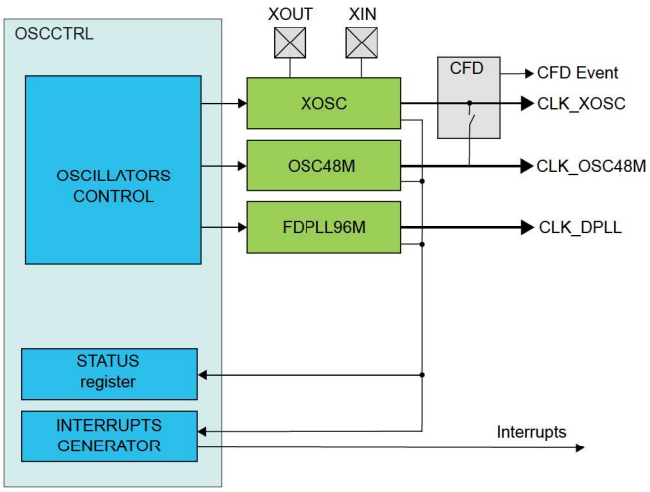

14.4 Signal Description

Signal	Description	Type
XIN	Multipurpose Crystal Oscillator or external clock generator input	Analog input
XOUT	Multipurpose Crystal Oscillator output	Analog output

The I/O lines are automatically selected when XOSC is enabled.

14.5 Peripheral Dependencies

Peripheral	Base Address	IRQ	AHB CLK	APB CLK	Generic CLK	PAC		Events		DMA	Sleep Walking
			Enabled at reset	Enabled at reset	Index	Index	Prot at reset	User	Generator	Index	
OSCCTRL	0x40001000	0	-	Y	0: FDPLL96M clk source 1: FDPLL96M 32kHz	4	N	-	-	-	Y

14.6 Functional Description

14.6.1 Principle of Operation

The XOSC, OSC48M, and FDPLL96M are configured through the OSCCTRL Control registers. Through this interface these oscillators are enabled, disabled, or have their calibration values updated.

The Status register gathers different status signals coming from the oscillators controlled by the OSCCTRL. These status signals can be used to generate system interrupts, and in some cases wake the system from Sleep mode, provided the corresponding interrupt is enabled.

14.6.2 External Multipurpose Crystal Oscillator (XOSC) Operation

The XOSC can operate in the following different modes:

- External clock, with an external clock signal connected to the XIN pin
- Crystal oscillator, with an external 0.4-32MHz crystal connected to the XIN and XOUT pins

The XOSC can be used as a clock source for generic clock generators. This is configured by the Generic Clock Controller (GCLK).

At reset, the XOSC is disabled, and the XIN/XOUT pins can be used as General Purpose I/O (GPIO) pins or by other peripherals in the system. When XOSC is enabled, the operating mode determines the GPIO usage. When in crystal oscillator mode, the XIN and XOUT pins are controlled by the OSCCTRL, and GPIO functions are overridden on both pins. When in external clock mode, only the XIN pin will be overridden and controlled by the OSCCTRL, while the XOUT pin can still be used as a GPIO pin.

The XOSC is enabled by writing a '1' to the Enable bit in the External Multipurpose Crystal Oscillator Control register (XOSCCTRL.ENABLE). The XOSC is disabled by clearing the Enable bit. When disabling the XOSC it is important only to write the Enable bit to '0' before additional changes are made to the XOSC register.

To enable XOSC as an external crystal oscillator, the XTAL Enable bit (XOSCCTRL.XTALEN) must be written to '1'. If XOSCCTRL.XTALEN is zero, the external clock input on XIN will be enabled.

When in crystal oscillator mode (XOSCCTRL.XTALEN = 1), the External Multipurpose Crystal Oscillator Gain (XOSCCTRL.GAIN) must be set to match the external crystal oscillator frequency. If the External Multipurpose Crystal Oscillator Automatic Amplitude Gain Control (XOSCCTRL.AMPGC) is '1', the oscillator amplitude will be automatically adjusted, and in most cases result in a lower power consumption. Setting the XOSCCTRL.AMPGC still requires the proper gain setting (XOSCCTRL.GAIN) for the external crystal.

The XOSC will behave differently in different sleep modes, based on the settings of XOSCCTRL.RUNSTDBY, XOSCCTRL.ONDEMAND, and XOSCCTRL.ENABLE. If XOSCCTRL.ENABLE = 0, the XOSC will be always stopped. For XOSCCTRL.ENABLE = 1, this table is valid:

Table 14-1. XOSC Sleep Behavior

CPU Mode	XOSCCTRL.RUNSTDBY	XOSCCTRL.ONDEMAND	Sleep Behavior
Active or Idle	-	0	Always run
Active or Idle	-	1	Run if requested by peripheral
Standby	1	0	Always run
Standby	1	1	Run if requested by peripheral
Standby	0	-	Run if requested by peripheral

After a hard reset, or when waking up from a Sleep mode where the XOSC was disabled, the XOSC will need time to stabilize on the correct frequency, depending on the external crystal specification. This start-up time can be configured by changing the Oscillator Start-Up Time bit group (XOSCCTRL.STARTUP) in the External Multipurpose Crystal Oscillator Control register. During the start-up time, the oscillator output is masked to ensure that no unstable clock propagates to the digital logic.

The External Multipurpose Crystal Oscillator Ready bit in the Status register (STATUS.XOSCRDY) is set once the external clock or crystal oscillator is stable and ready to be used as a clock source. An interrupt is generated on a zero-to-one transition on STATUS.XOSCRDY if the External Multipurpose Crystal Oscillator Ready bit in the Interrupt Enable Set register (INTENSET.XOSCRDY) is set.

14.6.3 Clock Failure Detection Operation

The Clock Failure Detector (CFD) allows the user to monitor the external clock or crystal oscillator signal provided by the external oscillator (XOSC). The CFD detects failing operation of the XOSC clock with reduced latency, and supports switching to a safe clock source in case of clock failure. The user can also switch from the safe clock back to XOSC in case of recovery. The safe clock is derived from the OSC48M oscillator with a configurable prescaler. This allows configuring the safe clock in order to fulfill the operative conditions of the microcontroller.

In sleep modes, CFD operation is automatically disabled when the external oscillator is not requested to run by a peripheral. See the Sleep Behavior table above when this is the case.

The user interface registers allow to enable, disable, and configure the CFD. The Status register provides status flags on failure and clock switch conditions. The CFD can optionally trigger an interrupt or an event when a failure is detected.

Clock Failure Detection

The CFD is disabled at reset. The CFD does not monitor the XOSC clock when the oscillator is disabled (XOSCCTRL.ENABLE = 0).

Before starting CFD operation, the user must start and enable the safe clock source (OSC48M oscillator).

CFD operation is started by writing a '1' to the CFD Enable bit in the External Oscillator Control register (XOSCCTRL.CFDEN). After starting or restarting the XOSC, the CFD does not detect failure until the start-up time has elapsed. The start-up time is configured by the Oscillator Start-Up Time in the External Multipurpose Crystal Oscillator Control register (XOSCCTRL.STARTUP). Once the XOSC Start-Up Time is elapsed, the XOSC clock is constantly monitored.

During a period of 4 safe clocks (monitor period), the CFD watches for a clock activity from the XOSC. There must be at least one rising and one falling XOSC clock edge during 4 safe clock periods to meet non-failure conditions. If no or insufficient activity is detected, the failure status is asserted: The Clock Failure Detector status bit in the Status register (STATUS.XOSCFAIL) and the Clock Failure Detector interrupt flag bit in the Interrupt Flag register (INTFLAG.XOSCFAIL) are set. If the XOSCFAIL bit in the Interrupt Enable Set register (INTENSET.XOSCFAIL) is set, an interrupt is generated. If the Event Output enable bit in the Event Control register (EVCTRL.CFDEO) is set, an output event is generated.

After a clock failure is issued the monitoring of the XOSC clock continues, and the Clock Failure Detector status bit in the Status register (STATUS.XOSCFAIL) reflects the current XOSC activity. If the CFD is disabled (XOSCCTRL.CFDEN=0) the XOSC must be disabled (XOSCCTRL.ENABLE=0) before re-enabling the CFD. Not following this guideline can lead to a false clock failure detection.

When the XOSC Clock Failure Detector is enabled (XOSCCTRL.CFDEN=1) and a failure is detected (STATUS.XOSCFAIL=1), the XOSC ready bit is not cleared (STATUS.XOSCRDY=1). When checking the XOSC ready status, the state of the XOSC clock failure status (STATUS.XOSCFAIL) must be checked before the XOSC ready status bit and dismiss the XOSC ready status if the XOSC clock failure status is set (STATUS.XOSCFAIL=1).

Clock Switch

When a clock failure is detected, the XOSC clock is replaced by the safe clock in order to maintain an active clock during the XOSC clock failure. The safe clock source is the OSC48M oscillator clock. The safe clock source frequency can be scaled down by a configurable prescaler to ensure that the safe clock frequency does not exceed the operating conditions selected by the application. When the XOSC clock is switched to the safe clock, the Clock Switch bit in the Status register (STATUS.XOSCCKSW) is set.

When the CFD has switched to the safe clock, the XOSC is not disabled. If desired, the application must take the necessary actions to disable the oscillator. The application must also take the necessary actions to configure the system clocks to continue normal operations.

In case the application can recover the XOSC, the application can switch back to the XOSC clock by writing a '1' to Switch Back Enable bit in the Clock Failure Control register (XOSCCTRL.SWBEN). Once the XOSC clock is switched back, the Switch Back bit (XOSCCTRL.SWBEN) is cleared by hardware.

Prescaler

The CFD has an internal configurable prescaler to generate the safe clock from the OSC48M oscillator. The prescaler size allows to scale down the OSC48M oscillator so the safe clock frequency is not higher than the XOSC clock frequency monitored by the CFD. The division factor is 2^P, with P being the value of the CFD Prescaler bits in the CFD Prescaler Register (CFDPRESC.CFDPRESC).

Example 14-1.

For an external crystal oscillator at 0.4 MHz and the OSC48M frequency at 16 MHz, the CFDPRESC.CFDPRESC value must be set scale down by more than factor 16/0.4 = 80, for example, to 128, for a safe clock of adequate frequency.

Event

If the Event Output Enable bit in the Event Control register (EVCTRL.CFDEO) is set, the CFD clock failure will be output on the Event Output. When the CFD is switched to the safe clock, the CFD clock failure will not be output on the Event Output.

Sleep Mode

The CFD is halted depending on configuration of the XOSC and the peripheral clock request. For further details, refer to the Sleep Behavior table above. The CFD interrupt can be used to wake up the device from sleep modes.

14.6.4 48 MHz Internal Oscillator (OSC48M) Operation

The OSC48M is an internal oscillator operating in open-loop mode and generating 48 MHz frequency. The OSC48M frequency is selected by writing to the Division Factor field in the OSC48MDIV register (OSC48MDIV.DIV). OSC48M is enabled by writing '1' to the Oscillator Enable bit in the OSC48M Control register (OSC48MCTRL.ENABLE), and disabled by writing a '0' to this bit.

After enabling OSC48M, the OSC48M clock is output as soon as the oscillator is ready (STATUS.OSC48MRDY = 1). User must ensure that the OSC48M is disabled before enabling it by reading STATUS.OSC48MRDY = 0.

After reset, OSC48M is enabled and serves as the default clock source at 4MHz.

OSC48M will behave differently in different sleep modes based on the settings of OSC48MCTRL.RUNSTDBY, OSC48MCTRL.ONDEMAND, and OSC48MCTRL.ENABLE. If OSC48MCTRL.ENABLE = 0, the OSC48M will be always stopped. For OSC48MCTRL.ENABLE = 1, the table below is valid:

Table 14-2. OSC48M Sleep Behavior

CPU Mode	OSC48MCTRL.RUNSTDBY	OSC48MCTRL.ONDEMAND	Sleep Behavior
Active or Idle	-	0	Always run
Active or Idle	-	1	Run if requested by peripheral
Standby	1	0	Always run
Standby	1	1	Run if requested by peripheral
Standby	0	-	Run if requested by peripheral

After a hard reset, or when waking up from a Sleep mode where the OSC48M was disabled, the OSC48M will need time to stabilize on the correct frequency (refer to 43. Electrical Characteristics). This start-up time can be configured by changing the Oscillator Start-Up Delay bit group (OSC48MSTUP.STARTUP) in the OSC48M Startup register. During the start-up time, the oscillator output is masked to ensure that no unstable clock propagates to the digital logic. The OSC48M Ready bit in the Status register (STATUS.OSC48MRDY) is set when the oscillator is stable and ready to be used as a clock source. An interrupt is generated on a zero-to-one transition on STATUS.OSC48MRDY if the OSC48M Ready bit in the Interrupt Enable Set register (INTENSET.OSC48MRDY) is set.

Faster start-up times are achievable by selecting shorter delays. However, the oscillator frequency may not stabilize within tolerances when short delays are used. If a fast start-up time is desired at the expense of initial accuracy, the division factor should be set to two or higher (OSC48MDIV.DIV > 0).

The OSC48M is used as a clock source for the generic clock generators. The OSC48M supports the change of frequency while running with a write to the OSC48M Divider register (OSC48MDIV.DIV). The OSC48M must be running and the OSC48M on demand bit (OSC48MCTRL.ONDEMAND) must be cleared when the OSC48MDIV.DIV is changed, to ensure synchronization is complete. The OSC48M must remain enabled until the sync busy flag returns to '0' (OSC48MSYNCBUSY.OSC48MDIV = 0).

14.6.5 Digital Phase-Locked Loop (FDPLL96M) Operation

The task of the DPLL is to maintain coherence between the input (reference) signal and the respective output frequency, CLK_DPLL through phase comparison. The DPLL controller supports three independent sources of reference clocks:

- XOSC32K: This clock is provided by the 32.768 kHz External Crystal Oscillator (XOSC32K).
- XOSC: This clock is provided by the External Multipurpose Crystal Oscillator (XOSC).
- GCLK: This clock is provided by the Generic Clock Controller.

When the controller is enabled, the relationship between the reference clock frequency and the output clock frequency is calculated as below:

$$f_{CK} = f_{CKR} \times \left(\mathrm{LDR} + 1 + \frac{\mathrm{LDRFRAC}}{16}\right) \times \frac{1}{2^{\mathrm{PRESC}}}$$

Where, f_{CK} is the frequency of the DPLL output clock, LDR is the loop divider ratio integer part, LDRFRAC is the loop divider ratio fractional part, f_{CKR} is the frequency of the selected reference clock, and PRESC is the output prescaler value.

Figure 14-2. DPLL Block Diagram

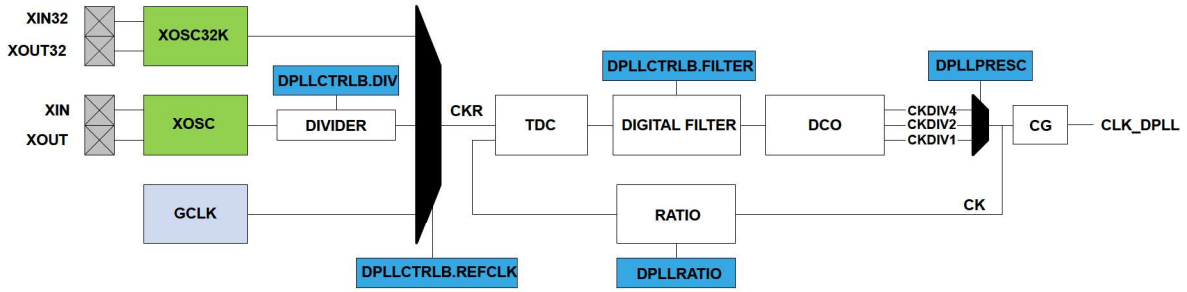

When the controller is disabled, the output clock is low. If the Loop Divider Ratio Fractional part bit field in the DPLL Ratio register (DPLLRATIO.LDRFRAC) is zero, the DPLL works in integer mode. Otherwise, the fractional mode is activated. The fractional part has a negative impact on the jitter of the DPLL.

For example (integer mode only): assuming F_{CKR} = 32 kHz and F_{CK} = 48 MHz, the multiplication ratio is 1500. It means that LDR shall be set to 1499.

For example (fractional mode): assuming F_{CKR} = 32 kHz and F_{CK} = 48.006 MHz, the multiplication ratio is 1500.1875 (1500 + 3/16). Thus LDR is set to 1499 and LDRFRAC to 3.

14.6.5.1 Basic Operation

14.6.5.1.1 Initialization, Enabling, Disabling, and Resetting

The DPLL is enabled by writing a '1' to the Enable bit in the DPLL Control A register (DPLLCTRLA.ENABLE). The DPLL is disabled by writing a zero to this bit.

The DPLLSYNCBUSY.ENABLE is set when the DPLLCTRLA.ENABLE bit is modified. It is cleared when the DPLL output clock CK has sampled the bit at the high level after enabling the DPLL. When disabling the DPLL, DPLLSYNCBUSY.ENABLE is cleared when the output clock is no longer running.

Figure 14-3. Enable Synchronization Busy Operation

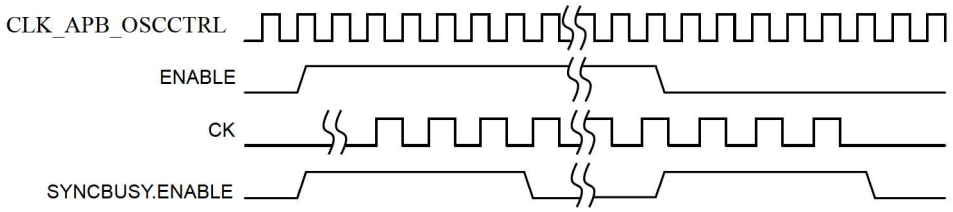

The frequency of the DPLL output clock CK is stable when the module is enabled and when the Lock bit in the DPLL Status register is set (DPLLSTATUS.LOCK).

When the Lock Time bit field in the DPLL Control B register (DPLLCTRLB.LTIME) is non-zero, a user defined lock time is used to validate the lock operation. In this case the lock time is constant. If DPLLCTRLB.LTIME = 0, the lock signal is linked with the status bit of the DPLL, and the lock time varies depending on the filter selection and the final target frequency.

When the Wake Up Fast bit (DPLLCTRLB.WUF) is set, the wake up fast mode is activated. In this mode the clock gating cell is enabled at the end of the startup time. At this time the final frequency is not stable, as it is still during the acquisition period, but it allows to save several milliseconds. After first acquisition, the clock gater (CG) generating the output clock CLK_DPLL is gated by the LOCK signal when the Lock Bypass bit (DPLLCTRLB.LBYPASS) is cleared or is not gated and delivers the output clock CLK_DPLL immediately when DPLLCTRLB.LBYPASS is set.

Table 14-3. CLK_DPLL Behavior from Startup to First Edge Detection

WUF	LTIME	CLK_DPLL Behavior
0	0	Normal Mode: First Edge when lock is asserted

.....continued		
WUF	**LTIME**	**CLK_DPLL Behavior**
0	Not Equal To Zero	Lock Timer Timeout mode: First Edge when the timer down-counts to 0.
1	X	Wake Up Fast Mode: First Edge when CK is active (startup time)

Table 14-4. CLK_DPLL Behavior after First Edge Detection

LBYPASS	CLK_DPLL Behavior
0	Normal Mode: the CLK_DPLL is turned off when lock signal is low.
1	Lock Bypass Mode: the CLK_DPLL is always running, lock is irrelevant.

Figure 14-4. CK and CLK_DPLL Output from DPLL Off Mode to Running Mode

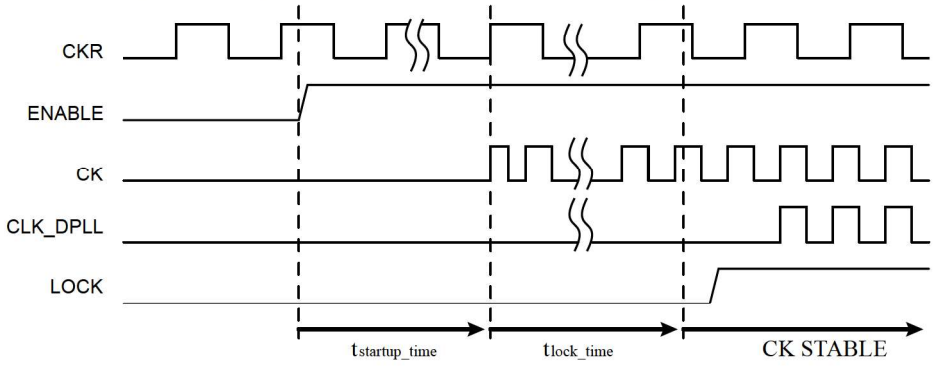

14.6.5.1.2 Reference Clock Switching

When a software operation requires reference clock switching, the recommended procedure is to turn the DPLL into the Standby mode, modify the DPLLCTRLB.REFCLK to select the desired reference source, and activate the DPLL again.

14.6.5.1.3 Output Clock Prescaler

The DPLL controller includes an output prescaler. This prescaler provides three selectable output clocks CK, CKDIV2 and CKDIV4. The Prescaler bit field in the DPLL Prescaler register (DPLLPRESC.PRESC) is used to select a new output clock prescaler. When the prescaler field is modified, the DPLLSYNCBUSY.DPLLPRESC bit is set. It will be cleared by hardware when the synchronization is over.

Figure 14-5. Output Clock Switching Operation

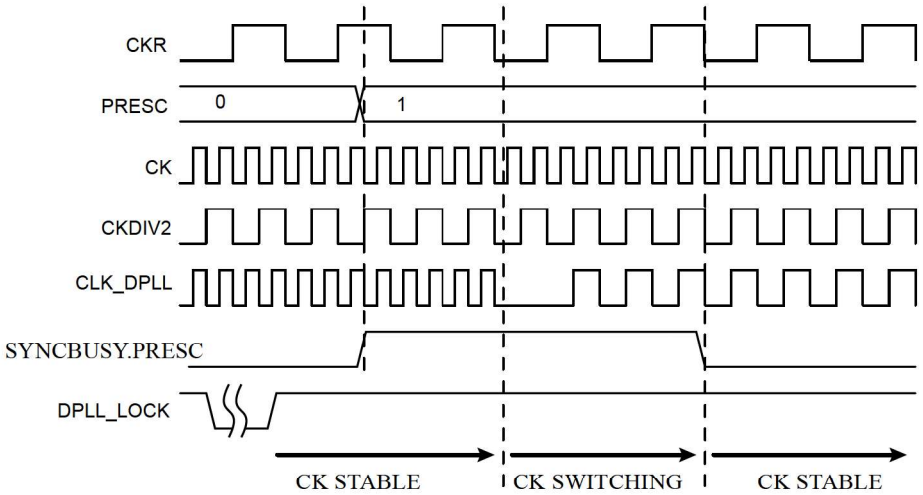

14.6.5.1.4 Loop Divider Ratio Updates

The DPLL Controller supports on-the-fly update of the DPLL Ratio Control (DPLLRATIO) register only when the GCLK_DPLL_32K (GCLK.PCHCTRL1) is configured and enabled. The FDPLL reference clock (DPLLCTRLB.REFCLK) can still be set to one of the three options (XOSC, XOSC32K, GCLK) as long as GCLK_DPLL_32K is active.

STATUS.DPLLLDRTO is set when the DPLLRATIO register has been modified and the DPLL analog cell has successfully sampled the updated value. At that time the DPLLSTATUS.LOCK bit is cleared and set again by hardware when the output frequency reached a stable state.

Figure 14-6. RATIOCTRL register update operation

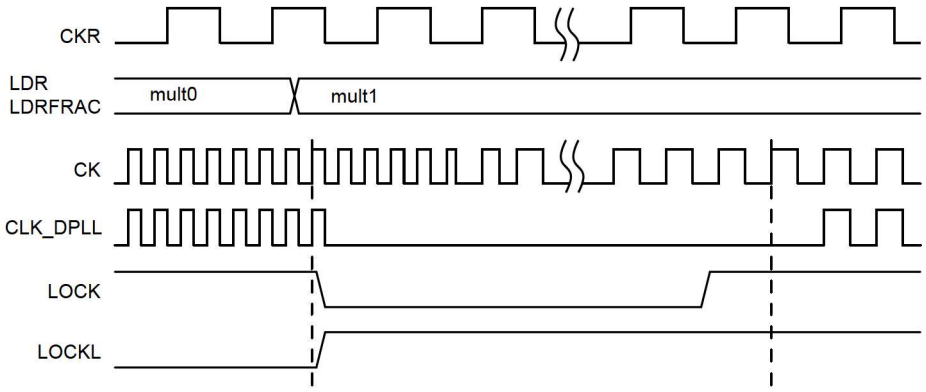

14.6.5.1.5 Digital Filter Selection

The PLL digital filter (PI controller) is automatically adjusted to provide a good compromise between stability and jitter. However, a software operation can override the filter setting using the Filter bit field in the DPLL Control B register (DPLLCTRLB.FILTER). The Low-Power Enable bit (DPLLCTRLB.LPEN) can be used to bypass the Time to Digital Converter (TDC) module.

14.6.6 Interrupts

The OSCCTRL has the following interrupt sources:

- XOSCRDY - Multipurpose Crystal Oscillator Ready: A 0-to-1 transition on the STATUS.XOSCRDY bit is detected
- XOSCFAIL - Clock Failure. A 0-to-1 transition on the STATUS.XOSCFAIL bit is detected
- OSC48MRDY - 48 MHz Internal Oscillator Ready: A 0-to-1 transition on the STATUS.OSC48MRDY bit is detected
- DPLL-related:
  - DPLLLOCKR - DPLL Lock Rise: A 0-to-1 transition of the STATUS.DPLLLOCKR bit is detected
  - DPLLLOCKF - DPLL Lock Fall: A 0-to-1 transition of the STATUS.DPLLLOCKF bit is detected
  - DPLLLTTO - DPLL Lock Timer Time-out: A 0-to-1 transition of the STATUS.DPLLLTTO bit is detected
  - DPLLLDRTO - DPLL Loop Divider Ratio Update Complete. A 0-to-1 transition of the STATUS.DPLLLDRTO bit is detected

All these interrupts are synchronous wake-up sources.

Each interrupt source has an interrupt flag associated with it. The interrupt flag in the Interrupt Flag Status and Clear register (INTFLAG) is set when the interrupt condition occurs.

Each interrupt can be individually enabled by writing a '1' to the corresponding bit in the Interrupt Enable Set register (INTENSET), and disabled by writing a '1' to the corresponding bit in the Interrupt Enable Clear register (INTENCLR). As both INTENSET and INTENCLR always reflect the same value, the status of interrupt enablement can be read from either register.

An interrupt request is generated when the interrupt flag is set and the corresponding interrupt is enabled. The interrupt request remains active until the interrupt flag is cleared, the interrupt is disabled, or the OSCCTRL is reset. Refer to the INTFLAG register for details on how to clear interrupt flags.

The OSCCTRL has one common interrupt request line for all the interrupt sources. The user must read the INTFLAG register to determine which interrupt condition is present. Refer to the INTFLAG register for details.

Note: The interrupts must be globally enabled for interrupt requests to be generated.

14.6.7 Events

The CFD can generate the following output event:

- Clock Failure (XOSCFAIL): Generated when the Clock Failure status bit is set in the Status register (STATUS.XOSCFAIL). The CFD event is not generated when the Clock Switch bit (STATUS.XOSCCKSW) in the Status register is set.

Writing a '1' to an Event Output bit in the Event Control register (EVCTRL.CFDEO) enables the CFD output event. Writing a '0' to this bit disables the CFD output event. Refer to the Event System chapter for details on configuring the event system.

14.6.8 Synchronization

OSC48M

Due to the multiple clock domains, values in the OSC48M control registers need to be synchronized to other clock domains.

When executing an operation that requires synchronization, the relevant synchronization bit in the Synchronization Busy register (OSC48MSYNCBUSY) will be set immediately, and cleared when synchronization is complete.

The following registers need synchronization when written:

- OSC48M Divider register (OSC48MDIV)

FDPLL96M

Due to the multiple clock domains, some registers in the FDPLL96M must be synchronized when accessed.

When executing an operation that requires synchronization, the relevant synchronization bit in the Synchronization Busy register (DPLLSYNCBUSY) will be set immediately, and cleared when synchronization is complete.

The following bits need synchronization when written:

- Enable bit in control register A (DPLLCTRLA.ENABLE)
- DPLL Ratio register (DPLLRATIO)
- DPLL Prescaler register (DPLLPRESC)

14.7 Register Summary

Offset	Name	Bit Pos.	7	6	5	4	3	2	1	0
0x00	INTENCLR	7:0				OSC48MRDY			XOSCFAIL	XOSCRDY
		15:8					DPLLLDRTO	DPLLLTO	DPLLLCKF	DPLLLCKR
		23:16								
		31:24								
0x04	INTENSET	7:0				OSC48MRDY			XOSCFAIL	XOSCRDY
		15:8					DPLLLDRTO	DPLLLTO	DPLLLCKF	DPLLLCKR
		23:16								
		31:24								
0x08	INTFLAG	7:0				OSC48MRDY			XOSCFAIL	XOSCRDY
		15:8					DPLLLDRTO	DPLLLTO	DPLLLCKF	DPLLLCKR
		23:16								
		31:24								
0x0C	STATUS	7:0				OSC48MRDY		XOSCCKSW	XOSCFAIL	XOSCRDY
		15:8					DPLLLDRTO	DPLLLTO	DPLLLCKF	DPLLLCKR
		23:16								
		31:24								
0x10	XOSCCTRL	7:0	ONDEMAND	RUNSTDBY		SWBEN	CFDEN	XTALEN	ENABLE	
		15:8	STARTUP[3:0]				AMPGC	GAIN[2:0]		
0x12	CFDPRESC	7:0						CFDPRESC[2:0]		
0x13	EVCTRL	7:0								CFDEO
0x14	OSC48MCTRL	7:0	ONDEMAND	RUNSTDBY					ENABLE	
0x15	OSC48MDIV	7:0					DIV[3:0]			
0x16	OSC48MSTUP	7:0						STARTUP[2:0]		
0x17	Reserved									
0x18	OSC48MSYNCBUSY	7:0						OSC48MDIV		
		15:8								
		23:16								
		31:24								
0x1C	DPLLCTRLA	7:0	ONDEMAND	RUNSTDBY					ENABLE	
0x1D ... 0x1F	Reserved									
0x20	DPLLRATIO	7:0	LDR[7:0]							
		15:8					LDR[11:8]			
		23:16					LDRFRAC[3:0]			
		31:24								
0x24	DPLLCTRLB	7:0			REFCLK[1:0]		WUF	LPEN	FILTER[1:0]	
		15:8				LBYPASS		LTIME[2:0]		
		23:16	DIV[7:0]							
		31:24						DIV[10:8]		
0x28	DPLLPRESC	7:0							PRESC[1:0]	
0x29 ... 0x2B	Reserved									
0x2C	DPLLSYNCBUSY	7:0					DPLLPRESC	DPLLRATIO	ENABLE	
0x2D ... 0x2F	Reserved									
0x30	DPLLSTATUS	7:0							CLKRDY	LOCK
0x31 ... 0x37	Reserved									
0x38	CAL48M	7:0			FCAL[5:0]					
		15:8							FRANGE[1:0]	
		23:16			TCAL[5:0]					
		31:24								

14.7.1 Interrupt Enable Clear

Name: INTENCLR
Offset: 0x00
Reset: 0x00000000
Property: PAC Write-Protection

This register allows the user to disable an interrupt without doing a read-modify-write operation. Changes in this register will also be reflected in the Interrupt Enable Set register (INTENSET).

Bit	31	30	29	28	27	26	25	24
Access								
Reset								

Bit	23	22	21	20	19	18	17	16
Access								
Reset								

Bit	15	14	13	12	11	10	9	8
					DPLLLDRTO	DPLLLTO	DPLLLCKF	DPLLLCKR
Access					R/W	R/W	R/W	R/W
Reset					0	0	0	0

Bit	7	6	5	4	3	2	1	0
				OSC48MRDY			XOSCFAIL	XOSCRDY
Access				R/W			R/W	R/W
Reset				0			0	0

Bit 11 – DPLLLDRTO DPLL Loop Divider Ratio Update Complete Interrupt Enable
Writing '0' to this bit has no effect.
Writing '1' to this bit will clear the DPLL Loop Divider Ratio Update Complete Interrupt Enable bit, which disables the DPLL Loop Divider Ratio Update Complete interrupt.

Value	Description
0	The DPLL Loop Divider Ratio Update Complete interrupt is disabled.
1	The DPLL Loop Divider Ratio Update Complete interrupt is enabled, and an interrupt request will be generated when the DPLL Loop Divider Ratio Update Complete Interrupt flag is set.

Bit 10 – DPLLLTO DPLL Lock Timeout Interrupt Enable
Writing '0' to this bit has no effect.
Writing '1' to this bit will clear the DPLL Lock Timeout Interrupt Enable bit, which disables the DPLL Lock Timeout interrupt.

Value	Description
0	The DPLL Lock Timeout interrupt is disabled.
1	The DPLL Lock Timeout interrupt is enabled, and an interrupt request will be generated when the DPLL Lock Timeout Interrupt flag is set.

Bit 9 – DPLLLCKF DPLL Lock Fall Interrupt Enable
Writing '0' to this bit has no effect.
Writing '1' to this bit will clear the DPLL Lock Fall Interrupt Enable bit, which disables the DPLL Lock Fall interrupt.

Value	Description
0	The DPLL Lock Fall interrupt is disabled.
1	The DPLL Lock Fall interrupt is enabled, and an interrupt request will be generated when the DPLL Lock Fall Interrupt flag is set.

Bit 8 – DPLLLCKR DPLL Lock Rise Interrupt Enable
Writing '0' to this bit has no effect.
Writing '1' to this bit will clear the DPLL Lock Rise Interrupt Enable bit, which disables the DPLL Lock Rise interrupt.

Value	Description
0	The DPLL Lock Rise interrupt is disabled.
1	The DPLL Lock Rise interrupt is enabled, and an interrupt request will be generated when the DPLL Lock Rise Interrupt flag is set.

Bit 4 – OSC48MRDY OSC48M Ready Interrupt Enable
Writing '0' to this bit has no effect.
Writing '1' to this bit will clear the OSC48M Ready Interrupt Enable bit, which disables the OSC48M Ready interrupt.

Value	Description
0	The OSC48M Ready interrupt is disabled.
1	The OSC48M Ready interrupt is enabled, and an interrupt request will be generated when the OSC48M Ready Interrupt flag is set.

Bit 1 – XOSCFAIL Clock Failure Interrupt Enable
Writing '0' to this bit has no effect.
Writing '1' to this bit will clear the XOSC Clock Failure Interrupt Enable bit, which disables the XOSC Clock Failure interrupt.

Value	Description
0	The XOSC Clock Failure interrupt is disabled.
1	The XOSC Clock Failure interrupt is enabled, and an interrupt request will be generated when the XOSC Clock Failure Interrupt flag is set.

Bit 0 – XOSCRDY XOSC Ready Interrupt Enable
Writing '0' to this bit has no effect.
Writing '1' to this bit will clear the XOSC Ready Interrupt Enable bit, which disables the XOSC Ready interrupt.

Value	Description
0	The XOSC Ready interrupt is disabled.
1	The XOSC Ready interrupt is enabled, and an interrupt request will be generated when the XOSC Ready Interrupt flag is set.

14.7.2 Interrupt Enable Set

Name: INTENSET
Offset: 0x04
Reset: 0x00000000
Property: PAC Write-Protection

This register allows the user to disable an interrupt without doing a read-modify-write operation. Changes in this register will also be reflected in the Interrupt Enable Clear register (INTENCLR).

Bit	31	30	29	28	27	26	25	24
Access								
Reset								

Bit	23	22	21	20	19	18	17	16
Access								
Reset								

Bit	15	14	13	12	11	10	9	8
					DPLLLDRTO	DPLLLTO	DPLLLCKF	DPLLLCKR
Access					R/W	R/W	R/W	R/W
Reset					0	0	0	0

Bit	7	6	5	4	3	2	1	0
				OSC48MRDY			XOSCFAIL	XOSCRDY
Access				R/W			R/W	R/W
Reset				0			0	0

Bit 11 – DPLLLDRTO DPLL Loop Divider Ratio Update Complete Interrupt Enable
Writing '0' to this bit has no effect.
Writing '1' to this bit will set the DPLL Loop Ratio Update Complete Interrupt Enable bit, which enables the DPLL Loop Ratio Update Complete interrupt.

Value	Description
0	The DPLL Loop Divider Ratio Update Complete interrupt is disabled.
1	The DPLL Loop Ratio Update Complete interrupt is enabled, and an interrupt request will be generated when the DPLL Loop Ratio Update Complete Interrupt flag is set.

Bit 10 – DPLLLTO DPLL Lock Timeout Interrupt Enable
Writing '0' to this bit has no effect.
Writing '1' to this bit will set the DPLL Lock Timeout Interrupt Enable bit, which enables the DPLL Lock Timeout interrupt.

Value	Description
0	The DPLL Lock Timeout interrupt is disabled.
1	The DPLL Lock Timeout interrupt is enabled, and an interrupt request will be generated when the DPLL Lock Timeout Interrupt flag is set.

Bit 9 – DPLLLCKF DPLL Lock Fall Interrupt Enable
Writing '0' to this bit has no effect.
Writing '1' to this bit will set the DPLL Lock Fall Interrupt Enable bit, which enables the DPLL Lock Fall interrupt.

Value	Description
0	The DPLL Lock Fall interrupt is disabled.
1	The DPLL Lock Fall interrupt is enabled, and an interrupt request will be generated when the DPLL Lock Fall Interrupt flag is set.

Bit 8 – DPLLLCKR DPLL Lock Rise Interrupt Enable
Writing '0' to this bit has no effect.
Writing '1' to this bit will set the DPLL Lock Rise Interrupt Enable bit, which enables the DPLL Lock Rise interrupt.

Value	Description
0	The DPLL Lock Rise interrupt is disabled.
1	The DPLL Lock Rise interrupt is enabled, and an interrupt request will be generated when the DPLL Lock Rise Interrupt flag is set.

Bit 4 – OSC48MRDY OSC48M Ready Interrupt Enable
Writing '0' to this bit has no effect.
Writing '1' to this bit will set the OSC48M Ready Interrupt Enable bit, which enables the OSC48M Ready interrupt.

Value	Description
0	The OSC48M Ready interrupt is disabled.
1	The OSC48M Ready interrupt is enabled, and an interrupt request will be generated when the OSC48M Ready Interrupt flag is set.

Bit 1 – XOSCFAIL XOSC Clock Failure Interrupt Enable
Writing '0' to this bit has no effect.
Writing '1' to this bit will set the XOSC Clock Failure Interrupt Enable bit, which enables the XOSC Clock Failure Interrupt.

Value	Description
0	The XOSC Clock Failure Interrupt is disabled.
1	The XOSC Clock Failure Interrupt is enabled, and an interrupt request will be generated when the XOSC Clock Failure Interrupt flag is set.

Bit 0 – XOSCRDY XOSC Ready Interrupt Enable
Writing '0' to this bit has no effect.
Writing '1' to this bit will set the XOSC Ready Interrupt Enable bit, which enables the XOSC Ready interrupt.

Value	Description
0	The XOSC Ready interrupt is disabled.
1	The XOSC Ready interrupt is enabled, and an interrupt request will be generated when the XOSC Ready Interrupt flag is set.

14.7.3 Interrupt Flag Status and Clear

Name: INTFLAG
Offset: 0x08
Reset: 0x00000000
Property: -

Bit	31	30	29	28	27	26	25	24
Access								
Reset								

Bit	23	22	21	20	19	18	17	16
Access								
Reset								

Bit	15	14	13	12	11	10	9	8
					DPLLLDRTO	DPLLLTO	DPLLLCKF	DPLLLCKR
Access					R/W	R/W	R/W	R/W
Reset					0	0	0	0

Bit	7	6	5	4	3	2	1	0
				OSC48MRDY			XOSCFAIL	XOSCRDY
Access				R/W			R/W	R/W
Reset				0			0	0

Bit 11 – DPLLLDRTO DPLL Loop Divider Ratio Update Complete
This flag is cleared by writing '1' to it.
This flag is set on a high to low transition of the DPLL Loop Divider Ratio Update Complete bit in the Status register (STATUS.DPLLLDRTO) and will generate an interrupt request if INTENSET.DPLLLDRTO is '1'.
Writing '0' to this bit has no effect.
Writing '1' to this bit clears the DPLL Loop Divider Ratio Update Complete interrupt flag.

Bit 10 – DPLLLTO DPLL Lock Timeout
This flag is cleared by writing '1' to it.
This flag is set on 0-to-1 transition of the DPLL Lock Timeout bit in the Status register (STATUS.DPLLLTO) and will generate an interrupt request if INTENSET.DPLLLTO is '1'.
Writing '0' to this bit has no effect.
Writing '1' to this bit clears the DPLL Lock Timeout interrupt flag.

Bit 9 – DPLLLCKF DPLL Lock Fall
This flag is cleared by writing '1' to it.
This flag is set on 0-to-1 transition of the DPLL Lock Fall bit in the Status register (STATUS.DPLLLCKF) and will generate an interrupt request if INTENSET.DPLLLCKF is '1'.
Writing '0' to this bit has no effect.
Writing '1' to this bit clears the DPLL Lock Fall interrupt flag.

Bit 8 – DPLLLCKR DPLL Lock Rise
This flag is cleared by writing '1' to it.
This flag is set on 0-to-1 transition of the DPLL Lock Rise bit in the Status register (STATUS.DPLLLCKR) and will generate an interrupt request if INTENSET.DPLLLCKR is '1'.
Writing '0' to this bit has no effect.
Writing '1' to this bit clears the DPLL Lock Rise interrupt flag.

Bit 4 – OSC48MRDY OSC48M Ready
This flag is cleared by writing '1' to it.
This flag is set on 0-to-1 transition of the OSC48M Ready bit in the Status register (STATUS.OSC48MRDY) and will generate an interrupt request if INTENSET.OSC48MRDY is '1'.
Writing '0' to this bit has no effect.
Writing '1' to this bit clears the OSC48M Ready interrupt flag.

Bit 1 – XOSCFAIL XOSC Failure Detection
This flag is cleared by writing '1' to it.
This flag is set on a 0-to-1 transition of the XOSC Clock Failure bit in the Status register (STATUS.XOSCFAIL) and will generate an interrupt request if INTENSET.XOSCFAIL is '1'.
Writing '0' to this bit has no effect.
Writing '1' to this bit clears the XOSC Clock Fail interrupt flag.

Bit 0 – XOSCRDY XOSC Ready
This flag is cleared by writing '1' to it.
This flag is set on a 0-to-1 transition of the XOSC Ready bit in the Status register (STATUS.XOSCRDY) and will generate an interrupt request if INTENSET.XOSCRDY is '1'.
Writing '0' to this bit has no effect.
Writing '1' to this bit clears the XOSC Ready interrupt flag.

14.7.4 Status

Name: STATUS
Offset: 0x0C
Reset: 0x00000000
Property: -

Bit	31	30	29	28	27	26	25	24
Access								
Reset								

Bit	23	22	21	20	19	18	17	16
Access								
Reset								

Bit	15	14	13	12	11	10	9	8
					DPLLLDRTO	DPLLLTO	DPLLLCKF	DPLLLCKR
Access					R	R	R	R
Reset					0	0	0	0

Bit	7	6	5	4	3	2	1	0
				OSC48MRDY		XOSCCKSW	XOSCFAIL	XOSCRDY
Access				R		R	R	R
Reset				0		0	0	0

Bit 11 – DPLLLDRTO DPLL Loop Divider Ratio Update Complete

Value	Description
0	DPLL Loop Divider Ratio Update Complete is not detected.
1	DPLL Loop Divider Ratio Update Complete is detected.

Bit 10 – DPLLLTO DPLL Lock Timeout

Value	Description
0	DPLL Lock time-out is not detected.
1	DPLL Lock time-out is detected.

Bit 9 – DPLLLCKF DPLL Lock Fall

Value	Description
0	DPLL Lock fall edge is not detected.
1	DPLL Lock fall edge is detected.

Bit 8 – DPLLLCKR DPLL Lock Rise

Value	Description
0	DPLL Lock rise edge is not detected.
1	DPLL Lock fall edge is detected.

Bit 4 – OSC48MRDY OSC48M Ready

Value	Description
0	OSC48M is not ready.
1	OSC48M is stable and ready to be used as a clock source.

Bit 2 – XOSCCKSW XOSC Clock Switch

Value	Description
0	XOSC is not switched and provides the external clock or crystal oscillator clock.

Value	Description
1	XOSC is switched and provides the safe clock.

Bit 1 – XOSCFAIL XOSC Clock Failure

Value	Description
0	XOSC failure is not detected.
1	A XOSC failure is detected.

Bit 0 – XOSCRDY XOSC Ready

Value	Description
0	XOSC is not ready.
1	XOSC is stable and ready to be used as a clock source.

14.7.5 External Multipurpose Crystal Oscillator (XOSC) Control

Name: XOSCCTRL
Offset: 0x10
Reset: 0x0080
Property: PAC Write-Protection

Bit	15	14	13	12	11	10	9	8
	STARTUP[3:0]				AMPGC	GAIN[2:0]		
Access	R/W	R/W	R/W	R/W	R/W	R/W	R/W	R/W
Reset	0	0	0	0	0	0	0	0

Bit	7	6	5	4	3	2	1	0
	ONDEMAND	RUNSTDBY		SWBEN	CFDEN	XTALEN	ENABLE	
Access	R/W	R/W		R/W	R/W	R/W	R/W	
Reset	1	0		0	0	0	0	

Bits 15:12 – STARTUP[3:0] Start-Up Time
These bits select start-up time for the oscillator.
The OSCULP32K oscillator is used to clock the start-up counter.

Table 14-5. Start-Up Time for External Multipurpose Crystal Oscillator

STARTUP[3:0]	Number of OSCULP32K Clock Cycles	Number of XOSC Clock Cycles	Approximate Equivalent Time [µs]
0x0	1	3	31
0x1	2	3	61
0x2	4	3	122
0x3	8	3	244
0x4	16	3	488
0x5	32	3	977
0x6	64	3	1953
0x7	128	3	3906
0x8	256	3	7813
0x9	512	3	15625
0xA	1024	3	31250
0xB	2048	3	62500
0xC	4096	3	125000
0xD	8192	3	250000
0xE	16384	3	500000
0xF	32768	3	1000000

Notes:
1. Actual startup time is 1 OSCULP32K cycle + 3 XOSC cycles.
2. The given time neglects the three XOSC cycles before OSCULP32K cycle.

Bit 11 – AMPGC Automatic Amplitude Gain Control
Note: The configuration of the oscillator gain is mandatory even if AMPGC feature is enabled at startup.

Value	Description
0	The automatic amplitude gain control is disabled.
1	The automatic amplitude gain control is enabled. Amplitude gain will be automatically adjusted during Crystal Oscillator operation.

Bits 10:8 – GAIN[2:0] Oscillator Gain
These bits select the gain for the oscillator. The listed maximum frequencies are recommendations, and might vary based on capacitive load and crystal characteristics. Those bits must be properly configured even when the Automatic Amplitude Gain Control is active.

Value	Recommended Max Frequency [MHz]
0x0	2
0x1	4
0x2	8
0x3	16
0x4	32
0x5-0x7	Reserved

Bit 7 – ONDEMAND On Demand Control
The On Demand operation mode allows the oscillator to be enabled or disabled, depending on peripheral clock requests.
If the ONDEMAND bit has been previously written to '1', the oscillator will be running only when requested by a peripheral. If there is no peripheral requesting the oscillator's clock source, the oscillator will be in a disabled state.
If On Demand is disabled, the oscillator will always be running when enabled.
In standby sleep mode, the On Demand operation is still active.

Value	Description
0	The oscillator is always on, if enabled.
1	The oscillator is enabled when a peripheral is requesting the oscillator to be used as a clock source. The oscillator is disabled if no peripheral is requesting the clock source.

Bit 6 – RUNSTDBY Run in Standby
This bit controls how the XOSC behaves during Standby Sleep mode, together with the ONDEMAND bit:

Value	Description
0	The XOSC is not running in Standby Sleep mode if no peripheral requests the clock.
1	The XOSC is running in Standby Sleep mode. If ONDEMAND = 1, the XOSC will be running when a peripheral is requesting the clock. If ONDEMAND = 0, the clock source will always be running in Standby sleep mode.

Bit 4 – SWBEN Clock Switch Back Enable
This bit controls the XOSC output switch back to the external clock or crystal oscillator in case of clock recovery:

Value	Description
0	The clock switch back is disabled.
1	The clock switch back is enabled. This bit is reset once the XOSC putput clock is switched back to the external clock or crystal oscillator.

Bit 3 – CFDEN Clock Failure Detector Enable
This bit controls the clock failure detector:

Value	Description
0	The Clock Failure Detector is disabled.
1	the Clock Failure Detector is enabled.

Bit 2 – XTALEN Crystal Oscillator Enable
This bit controls the connections between the I/O pads and the external clock or crystal oscillator:

Value	Description
0	External clock connected on XIN. XOUT can be used as general-purpose I/O.
1	Crystal connected to XIN/XOUT.

Bit 1 – ENABLE Oscillator Enable

Value	Description
0	The oscillator is disabled.
1	The oscillator is enabled.

14.7.6 Clock Failure Detector Prescaler

Name: CFDPRESC
Offset: 0x12
Reset: 0x00
Property: PAC Write-Protection

Bit	7	6	5	4	3	2	1	0
						CFDPRESC[2:0]		
Access						R/W	R/W	R/W
Reset						0	0	0

Bits 2:0 – CFDPRESC[2:0] Clock Failure Detector Prescaler
These bits select the prescaler for the clock failure detector.
The OSC48M oscillator is used to clock the CFD prescaler. The CFD safe clock frequency is the OSC48M frequency divided by 2^CFDPRESC.

14.7.7 Event Control

Name: EVCTRL
Offset: 0x13
Reset: 0x00
Property: PAC Write-Protection

Bit	7	6	5	4	3	2	1	0
								CFDEO
Access								R/W
Reset								0

Bit 0 – CFDEO Clock Failure Detector Event Output Enable
This bit indicates whether the Clock Failure detector event output is enabled or not and an output event will be generated when the Clock Failure detector detects a clock failure

Value	Description
0	Clock Failure detector event output is disabled and no event will be generated.
1	Clock Failure detector event output is enabled and an event will be generated.

14.7.8 48MHz Internal Oscillator (OSC48M) Control

Name: OSC48MCTRL
Offset: 0x14
Reset: 0x82
Property: PAC Write-Protection

Bit	7	6	5	4	3	2	1	0
	ONDEMAND	RUNSTDBY					ENABLE	
Access	R/W	R/W					R/W	
Reset	1	0					1	

Bit 7 – ONDEMAND On Demand Control
The On Demand operation mode allows the oscillator to be enabled or disabled depending on peripheral clock requests.
If the ONDEMAND bit has been previously written to '1', the oscillator will only be running when requested by a peripheral. If there is no peripheral requesting the oscillator's clock source, the oscillator will be in a disabled state.
If On Demand is disabled the oscillator will always be running when enabled.
In standby sleep mode, the On Demand operation is still active.

Value	Description
0	The oscillator is always on, if enabled.
1	The oscillator is enabled when a peripheral is requesting the oscillator to be used as a clock source. The oscillator is disabled if no peripheral is requesting the clock source.

Bit 6 – RUNSTDBY Run in Standby
This bit controls how the OSC48M behaves during standby sleep mode.

Value	Description
0	The OSC48M is disabled in Standby Sleep mode if no peripheral requests the clock.
1	The OSC48M is not stopped in Standby Sleep mode. If ONDEMAND=1, the OSC48M will be running when a peripheral is requesting the clock. If ONDEMAND=0, the clock source will always be running in Standby Sleep mode.

Bit 1 – ENABLE Oscillator Enable

Value	Description
0	The oscillator is disabled.
1	The oscillator is enabled.

14.7.9 OSC48M Divider

Name: OSC48MDIV
Offset: 0x15
Reset: 0x0B
Property: PAC Write-Protection, Write-Synchronized

Note: OSC48MDIV is a write-synchronized register: OSC48MSYNCBUSY.OSC48MDIV must be checked to ensure the OSC48MDIV synchronization is complete. The OSC48M supports the change of frequency while running with a write to the OSC48M Divider register (OSC48MDIV.DIV). If the OSC48M is running and not sourcing a Generic Clock generator (GCLK) when the OSC48MDIV.DIV is changed, the OSC48M Synchronization Busy status bit (OSC48MSYNCBUSY.OSC48MDIV) will remain a '1' until a GCLK is supplied to the OSC48M.

Bit	7	6	5	4	3	2	1	0
					DIV[3:0]			
Access					R/W	R/W	R/W	R/W
Reset					1	0	1	1

Bits 3:0 – DIV[3:0] Oscillator Divider Selection
These bits control the oscillator frequency range by adjusting the division ratio. The oscillator frequency is 48 MHz divided by DIV+1.

Value	Description
0000	48 MHz
0001	24 MHz
0010	16 MHz
0011	12 MHz
0100	9.6 MHz
0101	8 MHz
0110	6.86 MHz
0111	6 MHz
1000	5.33 MHz
1001	4.8 MHz
1010	4.36 MHz
1011	4 MHz
1100	3.69 MHz
1101	3.43 MHz
1110	3.2 MHz
1111	3 MHz

14.7.10 OSC48M Startup

Name: OSC48MSTUP
Offset: 0x16
Reset: 0x07
Property: PAC Write-Protection

Bit	7	6	5	4	3	2	1	0
						STARTUP[2:0]		
Access						R/W	R/W	R/W
Reset						1	1	1

Bits 2:0 – STARTUP[2:0] Oscillator Startup Delay
These bits select the oscillator start-up delay in oscillator cycles.

Table 14-6. Oscillator Divider Selection

STARTUP[2:0]	Number of OSCM48M Clock Cycles
0x0	8
0x1	16
0x2	32
0x3	64
0x4	128
0x5	256
0x6	512
0x7	1024

14.7.11 OSC48M Synchronization Busy

Name: OSC48MSYNCBUSY
Offset: 0x18
Reset: 0x00000000
Property: -

Bit	31	30	29	28	27	26	25	24
Access								
Reset								

Bit	23	22	21	20	19	18	17	16
Access								
Reset								

Bit	15	14	13	12	11	10	9	8
Access								
Reset								

Bit	7	6	5	4	3	2	1	0
						OSC48MDIV		
Access						R		
Reset						0		

Bit 2 – OSC48MDIV Oscillator Divider Synchronization Status
This bit is set when OSC48MDIV register is written.
This bit is cleared when OSC48MDIV synchronization is completed.

Value	Description
0	No synchronized access.
1	Synchronized access is ongoing.

14.7.12 DPLL Control A

Name: DPLLCTRLA
Offset: 0x1C
Reset: 0x80
Property: PAC Write-Protection, Write-Synchronized Bits

Bit	7	6	5	4	3	2	1	0
	ONDEMAND	RUNSTDBY					ENABLE	
Access	R/W	R/W					R/W	
Reset	1	0					0	

Bit 7 – ONDEMAND On Demand Clock Activation
The On Demand operation mode allows the DPLL to be enabled or disabled depending on peripheral clock requests. If the ONDEMAND bit has been previously written to '1', the DPLL will only be running when requested by a peripheral. If there is no peripheral requesting the DPLL's clock source, the DPLL will be in a disabled state.
If On Demand is disabled the DPLL will always be running when enabled.
In Standby Sleep mode, the On Demand operation is still active.
Note: This bit is not synchronized.

Value	Description
0	The DPLL is always on, if enabled.
1	The DPLL is enabled when a peripheral is requesting the DPLL to be used as a clock source. The DPLL is disabled if no peripheral is requesting the clock source.

Bit 6 – RUNSTDBY Run in Standby
This bit controls how the DPLL behaves during Standby Sleep mode:
Note: This bit is not synchronized.

Value	Description
0	The DPLL is disabled in Standby Sleep mode if no peripheral requests the clock.
1	The DPLL is not stopped in Standby Sleep mode. If ONDEMAND = 1, the DPLL will be running when a peripheral is requesting the clock. If ONDEMAND = 0, the clock source will always be running in Standby Sleep mode.

Bit 1 – ENABLE DPLL Enable
Note: This bit is write-synchronized: DPLLSYNCBUSY.ENABLE must be checked to ensure the DPLLCTRLA.ENABLE synchronization is complete.

Value	Description
0	The DPLL is disabled.
1	The DPLL is enabled.

14.7.13 DPLL Ratio Control

Name: DPLLRATIO
Offset: 0x20
Reset: 0x00
Property: PAC Write-Protection, Write-Synchronized

Note: DPLLRATIO is a write-synchronized register: DPLLSYNCBUSY.DPLLRATIO must be checked to ensure the DPLLRATIO synchronization is complete.

Bit	31	30	29	28	27	26	25	24
Access								
Reset								

Bit	23	22	21	20	19	18	17	16
					LDRFRAC[3:0]			
Access					R/W	R/W	R/W	R/W
Reset					0	0	0	0

Bit	15	14	13	12	11	10	9	8
					LDR[11:8]			
Access					R/W	R/W	R/W	R/W
Reset					0	0	0	0

Bit	7	6	5	4	3	2	1	0
	LDR[7:0]							
Access	R/W	R/W	R/W	R/W	R/W	R/W	R/W	R/W
Reset	0	0	0	0	0	0	0	0

Bits 19:16 – LDRFRAC[3:0] Loop Divider Ratio Fractional Part
Writing these bits selects the fractional part of the frequency multiplier.

Bits 11:0 – LDR[11:0] Loop Divider Ratio
Writing these bits selects the integer part of the frequency multiplier.

14.7.14 DPLL Control B

Name: DPLLCTRLB
Offset: 0x24
Reset: 0x00
Property: PAC Write-Protection

Bit	31	30	29	28	27	26	25	24
						DIV[10:8]		
Access						R/W	R/W	R/W
Reset						0	0	0

Bit	23	22	21	20	19	18	17	16
	DIV[7:0]							
Access	R/W	R/W	R/W	R/W	R/W	R/W	R/W	R/W
Reset	0	0	0	0	0	0	0	0

Bit	15	14	13	12	11	10	9	8
				LBYPASS		LTIME[2:0]		
Access				R/W		R/W	R/W	R/W
Reset				0		0	0	0

Bit	7	6	5	4	3	2	1	0
			REFCLK[1:0]		WUF	LPEN	FILTER[1:0]	
Access			R/W	R/W	R/W	R/W	R/W	R/W
Reset			0	0	0	0	0	0

Bits 26:16 – DIV[10:0] Clock Divider
These bits set the XOSC clock division factor and can be calculated with following formula:

$$f_{DIV} = \frac{f_{XOSC}}{2x(DIV + 1)}$$

Bit 12 – LBYPASS Lock Bypass

Value	Description
0	DPLL Lock signal drives the DPLL controller internal logic.
1	DPLL Lock signal is always asserted.

Bits 10:8 – LTIME[2:0] Lock Time
These bits select the lock time-out value:

Value	Name	Description
0x0	Default	No time-out. Automatic lock.
0x1	Reserved	
0x2	Reserved	
0x3	Reserved	
0x4	8MS	Time-out if no lock within 8ms
0x5	9MS	Time-out if no lock within 9ms
0x6	10MS	Time-out if no lock within 10ms
0x7	11MS	Time-out if no lock within 11ms

Bits 5:4 – REFCLK[1:0] Reference Clock Selection
Write these bits to select the DPLL clock reference:

Value	Name	Description
0x0	XOSC32K	XOSC32K clock reference
0x1	XOSC	XOSC clock reference
0x2	GCLK	GCLK clock reference

Value	Name	Description
0x3	Reserved	

Bit 3 – WUF Wake Up Fast

Value	Description
0	DPLL clock is output after startup and lock time.
1	DPLL clock is output after startup time.

Bit 2 – LPEN Low-Power Enable

Value	Description
0	The low-power mode is disabled. Time to Digital Converter is enabled.
1	The low-power mode is enabled. Time to Digital Converter is disabled. This will improve power consumption but increase the output jitter.

Bits 1:0 – FILTER[1:0] Proportional Integral Filter Selection

These bits select the DPLL filter type:

Value	Name	Description
0x0	DEFAULT	Default filter mode
0x1	LBFILT	Low bandwidth filter
0x2	HBFILT	High bandwidth filter
0x3	HDFILT	High damping filter

14.7.15 DPLL Prescaler

Name: DPLLPRESC
Offset: 0x28
Reset: 0x00
Property: PAC Write-Protection, Write-Synchronized

Note: DPLLPRESC is a write-synchronized register: DPLLSYNCBUSY.DPLLPRESC must be checked to ensure the DPLLPRESC synchronization is complete.

Bit	7	6	5	4	3	2	1	0
							PRESC[1:0]	
Access							R/W	R/W
Reset							0	0

Bits 1:0 – PRESC[1:0] Output Clock Prescaler
These bits define the output clock prescaler setting.

Value	Name	Description
0x0	DIV1	DPLL output is divided by 1
0x1	DIV2	DPLL output is divided by 2
0x2	DIV4	DPLL output is divided by 4
0x3	Reserved	

14.7.16 DPLL Synchronization Busy

Name: DPLLSYNCBUSY
Offset: 0x2C
Reset: 0x00
Property: –

Bit	7	6	5	4	3	2	1	0
					DPLLPRESC	DPLLRATIO	ENABLE	
Access					R	R	R	
Reset					0	0	0	

Bit 3 – DPLLPRESC DPLL Prescaler Synchronization Status

Value	Description
0	The DPLLRESC register has been synchronized.
1	The DPLLRESC register value has changed and its synchronization is in progress.

Bit 2 – DPLLRATIO DPLL Loop Divider Ratio Synchronization Status

Value	Description
0	The DPLLRATIO register has been synchronized.
1	The DPLLRATIO register value has changed and its synchronization is in progress.

Bit 1 – ENABLE DPLL Enable Synchronization Status

Value	Description
0	The DPLLCTRLA.ENABLE bit has been synchronized.
1	The DPLLCTRLA.ENABLE bit value has changed and its synchronization is in progress.

14.7.17 DPLL Status

Name: DPLLSTATUS
Offset: 0x30
Reset: 0x00
Property: –

Bit	7	6	5	4	3	2	1	0
							CLKRDY	LOCK
Access							R	R
Reset							0	0

Bit 1 – CLKRDY Output Clock Ready

Value	Description
0	The DPLL output clock is off.
1	The DPLL output clock in on.

Bit 0 – LOCK DPLL Lock status bit

Value	Description
0	The DPLL Lock signal is cleared, when the DPLL is disabled or when the DPLL is trying to reach the target frequency.
1	The DPLL Lock signal is asserted when the desired frequency is reached.

14.7.18 OSC48M Calibration

Name: CAL48M
Offset: 0x38
Reset: Calibrated value for VDD range 3.6 V to 5.5 V
Property: PAC Write-Protection

This register (bits 0 to 21) must be updated with the CAL48M bit field from the NVM Software Calibration Area. Refer to 8.4 NVM Software Calibration Area Mapping.

Bit	31	30	29	28	27	26	25	24
Access								
Reset								

Bit	23	22	21	20	19	18	17	16
			TCAL[5:0]					
Access			R/W	R/W	R/W	R/W	R/W	R/W
Reset			x	x	x	x	x	x

Bit	15	14	13	12	11	10	9	8
							FRANGE[1:0]	
Access							R/W	R/W
Reset							x	x

Bit	7	6	5	4	3	2	1	0
			FCAL[5:0]					
Access			R/W	R/W	R/W	R/W	R/W	R/W
Reset			x	x	x	x	x	x

Bits 21:16 – TCAL[5:0] Temperature Calibration

Bits 9:8 – FRANGE[1:0] Frequency Range

Bits 5:0 – FCAL[5:0] Frequency Calibration

15. 32.768 kHz Oscillators Controller (OSC32KCTRL)

15.1 Overview

The 32.768 kHz Oscillators Controller (OSC32KCTRL) provides a user interface to the 32.768 kHz oscillators: XOSC32K, OSC32K, and OSCULP32K.

The OSC32KCTRL sub-peripherals can be enabled, disabled, calibrated, and monitored through interface registers.

All sub-peripheral statuses are collected in the Status register (STATUS). They can additionally trigger interrupts upon status changes through the INTENSET, INTENCLR, and INTFLAG registers.

15.2 Features

- 32.768 kHz Crystal Oscillator (XOSC32K)
  - Programmable start-up time
  - Crystal or external input clock on XIN32 I/O
  - Clock failure detection with safe clock switch
  - Clock failure event output
- 32.768 kHz High Accuracy Internal Oscillator (OSC32K)
  - Frequency fine tuning
  - Programmable start-up time
- 32.768 kHz Ultra Low-Power Internal Oscillator (OSCULP32K)
  - Ultra low-power, always-on oscillator
  - Frequency fine tuning
- 1.024 kHz clock outputs available

15.3 Block Diagram

Figure 15-1. OSC32KCTRL Block Diagram

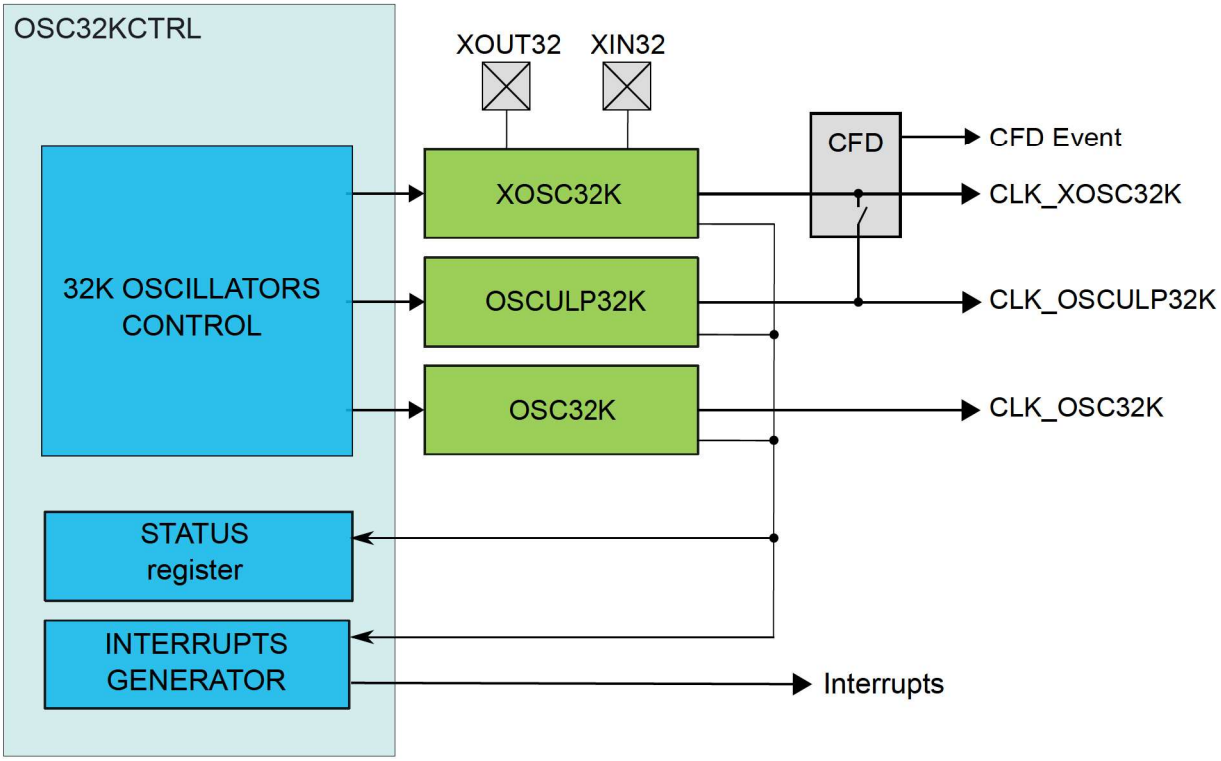

15.4 Signal Description

Signal	Description	Type
XIN32	Analog Input	32.768 kHz Crystal Oscillator or external clock input
XOUT32	Analog Output	32.768 kHz Crystal Oscillator output

The I/O lines are automatically selected when XOSC32K is enabled.

Note: The signal of the external crystal oscillator may affect the jitter of neighboring pads.

15.5 Peripheral Dependencies

Peripheral	Base Address	IRQ	AHB CLK	APB CLK	Generic CLK	PAC		Events		DMA	Sleep Walking
			Enabled at reset	Enabled at reset	Index	Index	Prot at reset	User	Generator	Index	
OSC32KCTRL	0x40001400	0	-	Y	-	5	N	-	1: XOSC_FAIL	-	Y

15.6 Functional Description

15.6.1 Principle of Operation

The XOSC32K, OSC32K, and OSCULP32K are configured through the OSC32KCTRL Control registers. Through this interface, the sub-peripherals are enabled, disabled, or have their calibration values updated.

The STATUS register gathers different status signals coming from the sub-peripherals of the OSC32KCTRL Control register. The status signals can be used to generate system interrupts, and in some cases wake up the system from Standby mode, provided the corresponding interrupt is enabled.

15.6.2 32.768 kHz External Crystal Oscillator (XOSC32K) Operation

The XOSC32K can operate in these modes:

- External clock, with an external clock signal connected to XIN32
- Crystal oscillator, with an external 32.768 kHz crystal connected between XIN32 and XOUT32

At reset, the XOSC32K is disabled, and the XIN32/XOUT32 pins can either be used as General Purpose I/O (GPIO) pins or by other peripherals in the system.

When XOSC32K is enabled, the operating mode determines the GPIO usage. When in crystal oscillator mode, the XIN32 and XOUT32 pins are controlled by the OSC32KCTRL, and GPIO functions are overridden on both pins. When in external clock mode, the only XIN32 pin will be overridden and controlled by the OSC32KCTRL, while the XOUT32 pin can still be used as a GPIO pin.

The XOSC32K is enabled by writing a '1' to the Enable bit in the 32.768 kHz External Crystal Oscillator Control register (XOSC32K.ENABLE = 1). The XOSC32K is disabled by writing a '0' to the Enable bit in the 32.768 kHz External Crystal Oscillator Control register (XOSC32K.ENABLE = 0). When disabling the XOSC32K it is important only to write the Enable bit to '0' before additional changes are made to the XOSC32K register.

To enable the XOSC32K as a crystal oscillator, the XTALEN bit in the 32.768 kHz External Crystal Oscillator Control register must be set (XOSC32K.XTALEN = 1). If XOSC32K.XTALEN is '0', the external clock input will be enabled.

The XOSC32K 32.768 kHz output is enabled by setting the 32.768 kHz Output Enable bit in the 32.768 kHz External Crystal Oscillator Control register (XOSC32K.EN32K = 1). The XOSC32K also has a 1.024 kHz clock output. This is enabled by setting the 1.024 kHz Output Enable bit in the 32.768 kHz External Crystal Oscillator Control register (XOSC32K.EN1K = 1).

It is also possible to lock the XOSC32K configuration by setting the Write Lock bit in the 32.768 kHz External Crystal Oscillator Control register (XOSC32K.WRTLOCK = 1). If set, the XOSC32K configuration is locked until a Power-On Reset (POR) is detected.

The XOSC32K will behave differently in different sleep modes based on the settings of XOSC32K.RUNSTDBY, XOSC32K.ONDEMAND, and XOSC32K.ENABLE. If XOSC32KCTRL.ENABLE = 0, the XOSC32K will be always stopped. For XOS32KCTRL.ENABLE = 1, the table below is valid:

Table 15-1. XOSC32K Sleep Behavior

CPU Mode	XOSC32K.RUNSTDBY	XOSC32K.ONDEMAND	Sleep Behavior of XOSC32K and CFD
Active or Idle	-	0	Always run
Active or Idle	-	1	Run if requested by peripheral
Standby	1	0	Always run
Standby	1	1	Run if requested by peripheral
Standby	0	-	Run if requested by peripheral

As a crystal oscillator usually requires a very long start-up time, the 32.768 kHz External Crystal Oscillator will keep running across resets when XOSC32K.ONDEMAND = 0, except for Power-on Reset (POR). After a reset or when waking up from a sleep mode where the XOSC32K was disabled, the XOSC32K will need time to stabilize on the

correct frequency, depending on the external crystal specification. This start-up time can be configured by changing the Oscillator Start-Up Time bit group (XOSC32K.STARTUP) in the 32.768 kHz External Crystal Oscillator Control register. During the start-up time, the oscillator output is masked to ensure that no unstable clock propagates to the digital logic.

Once the external clock or crystal oscillator is stable and ready to be used as a clock source, the XOSC32K Ready bit in the Status register is set (STATUS.XOSC32KRDY = 1). The transition of STATUS.XOSC32KRDY from '0' to '1' generates an interrupt if the XOSC32K Ready bit in the Interrupt Enable Set register is set (INTENSET.XOSC32KRDY = 1).

The XOSC32K can be used as a source for Generic Clock Generators (GCLK) or for the Real-Time Counter (RTC). Before enabling the GCLK or the RTC module, the corresponding oscillator output must be enabled (XOSC32K.EN32K or XOSC32K.EN1K) in order to ensure proper operation. In the same way, the GCLK or RTC modules must be disabled before the clock selection is changed. For details on RTC clock configuration, refer also to 15.6.7 Real-Time Counter Clock Selection.

When the XOSC32K 1024 Hz clock output is used to clock the RTC (RTCCTRL.RTCSEL=4), ensure the XOSC32K is in the 'Always run' (as shown above in Table 15-1 XOSC32K Sleep Behavior) configuration.

15.6.3 Clock Failure Detection Operation

The Clock Failure Detector (CFD) allows the user to monitor the external clock or crystal oscillator signal provided by the external oscillator (XOSC32K). The CFD detects failing operation of the XOSC32K clock with reduced latency, and supports switching to a safe clock source in case of clock failure. The user can also switch from the safe clock back to XOSC32K in case of recovery. The safe clock is derived from the OSCULP32K oscillator with a configurable prescaler. This allows configuring the safe clock in order to fulfill the operative conditions of the microcontroller.

In sleep modes, CFD operation is automatically disabled when the external oscillator is not requested to run by a peripheral. See the Sleep Behavior table above when this is the case.

The user interface registers allow to enable, disable, and configure the CFD. The Status register provides status flags on failure and clock switch conditions. The CFD can optionally trigger an interrupt or an event when a failure is detected.

Clock Failure Detection

The CFD is reset only at power-on (POR). The CFD does not monitor the XOSC32K clock when the oscillator is disabled (XOSC32K.ENABLE = 0).

Before starting CFD operation, the user must start and enable the safe clock source (OSCULP32K oscillator).

CFD operation is started by writing a '1' to the CFD Enable bit in the External Oscillator Control register (CFDCTRL.CFDEN). After starting or restarting the XOSC32K, the CFD does not detect failure until the start-up time has elapsed. The start-up time is configured by the Oscillator Start-Up Time in the External Multipurpose Crystal Oscillator Control register (XOSC32K.STARTUP). Once the XOSC32K Start-Up Time is elapsed, the XOSC32K clock is constantly monitored.

During a period of 4 safe clocks (monitor period), the CFD watches for a clock activity from the XOSC32K. There must be at least one rising and one falling XOSC32K clock edge during 4 safe clock periods to meet non-failure conditions. If no or insufficient activity is detected, the failure status is asserted: The Clock Failure Detector status bit in the Status register (STATUS.CLKFAIL) and the Clock Failure Detector interrupt flag bit in the Interrupt Flag register (INTFLAG.CLKFAIL) are set. If the CLKFAIL bit in the Interrupt Enable Set register (INTENSET.CLKFAIL) is set, an interrupt is generated as well. If the Event Output enable bit in the Event Control register (EVCTRL.CFDEO) is set, an output event is generated, too.

After a clock failure was issued the monitoring of the XOSC32K clock is continued, and the Clock Failure Detector status bit in the Status register (STATUS.CLKFAIL) reflects the current XOSC32K activity.

If the CFD is disabled (CFDCTRL.CFDEN=0) the XOSC32K must be disabled before re-enabling the CFD. Not following this guideline can lead to a false clock failure detection.

Clock Switch

When a clock failure is detected, the XOSC32K clock is replaced by the safe clock in order to maintain an active clock during the XOSC32K clock failure. The safe clock source is the OSCULP32K oscillator clock. Both 32.768 kHz and 1.024 kHz outputs of the XOSC32K are replaced by the respective OSCULP32K 32.768 kHz and 1.024 kHz

outputs. The safe clock source can be scaled down by a configurable prescaler to ensure that the safe clock frequency does not exceed the operating conditions selected by the application. When the XOSC32K clock is switched to the safe clock, the Clock Switch bit in the Status register (STATUS.CLKSW) is set.

When the CFD has switched to the safe clock, the XOSC32K is not disabled. If desired, the application must take the necessary actions to disable the oscillator. The application must also take the necessary actions to configure the system clocks to continue normal operations. In the case the application can recover the XOSC32K, the application can switch back to the XOSC32K clock by writing a '1' to Switch Back Enable bit in the Clock Failure Control register (CFDCTRL.SWBACK). Once the XOSC32K clock is switched back, the Switch Back bit (CFDCTRL.SWBACK) is cleared by hardware.

Prescaler
The CFD has an internal configurable prescaler to generate the safe clock from the OSCULP32K oscillator. The prescaler size allows to scale down the OSCULP32K oscillator so the safe clock frequency is not higher than the XOSC32K clock frequency monitored by the CFD. The maximum division factor is 2.

The prescaler is applied on both outputs (32.768 kHz and 1.024 kHz) of the safe clock.

> **Example 15-1.**
>
> For an external crystal oscillator at 32.768 kHz and the OSCULP32K frequency is 32.768 kHz, the XOSC32K.CFDPRESC should be set to 0 for a safe clock of equal frequency.

Event
If the Event Output Enable bit in the Event Control register (EVCTRL.CFDEO) is set, the CFD clock failure will be output on the Event Output. When the CFD is switched to the safe clock, the CFD clock failure will not be output on the Event Output.

Sleep Mode
The CFD is halted depending on configuration of the XOSC32K and the peripheral clock request. For further details, refer to the Sleep Behavior table above. The CFD interrupt can be used to wake up the device from sleep modes.

15.6.4 32.768 kHz Internal Oscillator (OSC32K) Operation

The OSC32K provides a tunable, low-speed, and low-power clock source.

At reset, the OSC32K is disabled. It can be enabled by setting the Enable bit in the 32.768 kHz Internal Oscillator Control register (OSC32K.ENABLE = 1). The OSC32K is disabled by clearing the Enable bit in the 32.768 kHz Internal Oscillator Control register (OSC32K.ENABLE = 0).

The frequency of the OSC32K oscillator is controlled by OSC32K.CALIB. Before using the OSC32K, this Calibration field must be loaded with production calibration values from the NVM Software Calibration Area. When writing the Calibration bits, the user must wait for the STATUS.OSC32KRDY bit to go high before the new value is committed to the oscillator.

The OSC32K has a 32.768 kHz output which is enabled by setting the EN32K bit in the 32.768 kHz Internal Oscillator Control register (OSC32K.EN32K = 1). The OSC32K also has a 1.024 kHz clock output. This is enabled by setting the EN1K bit in the 32.768 kHz Internal Oscillator Control register (OSC32K.EN1K).

The OSC32K will behave differently in different sleep modes based on the settings of OSC32K.RUNSTDBY, OSC32K.ONDEMAND, and OSC32K.ENABLE. If OSC32KCTRL.ENABLE = 0, the OSC32K will be always stopped. For OS32KCTRL.ENABLE = 1, this table is valid:

Table 15-2. OSC32K Sleep Behavior

CPU Mode	OSC32KCTRL.RUNSTDBY	OSC32KCTRL.ONDEMAND	Sleep Behavior
Active or Idle	-	0	Always run
Active or Idle	-	1	Run if requested by peripheral
Standby	1	0	Always run

.....continued			
CPU Mode	OSC32KCTRL.RUNSTDBY	OSC32KCTRL.ONDEMAND	Sleep Behavior
Standby	1	1	Run if requested by peripheral
Standby	0	-	Run if requested by peripheral

The OSC32K requires a start-up time. For this reason, OSC32K will keep running across resets when OSC32K.ONDEMAND = 0, except for Power-on Reset (POR).

After such a reset, or when waking up from a Sleep mode where the OSC32K was disabled, the OSC32K will need time to stabilize on the correct frequency.

This startup time can be configured by changing the Oscillator Start-Up Time bit group (OSC32K.STARTUP) in the OSC32K Control register. During the start-up time, the oscillator output is masked to ensure that no unstable clock propagates to the digital logic.

Once the oscillator is stable and ready to be used as a clock source, the OSC32K Ready bit in the Status register is set (STATUS.OSC32KRDY=1). The transition of STATUS.OSC32KRDY from '0' to '1' generates an interrupt if the OSC32K Ready bit in the Interrupt Enable Set register is set (INTENSET.OSC32KRDY = 1).

The OSC32K can be used as a source for Generic Clock Generators (GCLK) or for the Real-Time Counter (RTC). Before enabling the GCLK or the RTC module, the corresponding oscillator output must be enabled (OSC32K.EN32K or OSC32K.EN1K) in order to ensure proper operation. In the same way, the GCLK or RTC modules must be disabled before the clock selection is changed.

15.6.5 32.768 kHz Ultra-Low Power Internal Oscillator (OSCULP32K) Operation

The OSCULP32K provides a tunable, low-speed, and ultra-low power clock source. The OSCULP32K is factory-calibrated under typical voltage and temperature conditions. The OSCULP32K should be preferred to the OSC32K whenever the power requirements are prevalent over frequency stability and accuracy.

The OSCULP32K is enabled by default after a Power-on Reset (POR) and will always run except during POR. The frequency of the OSCULP32K Oscillator is controlled by the value in the Calibration bits in the 32.768 kHz Ultra-Low Power Internal Oscillator Control register (OSCULP32K.CALIB). This data is used to compensate for process variations.

OSCULP32K.CALIB is automatically loaded from Flash Factory Calibration during start-up. The calibration value can be overridden by the user by writing to OSCULP32K.CALIB.

It is also possible to lock the OSCULP32K configuration by setting the Write Lock bit in the 32.768 kHz Ultra-Low Power Internal Oscillator Control register (OSCULP32K.WRTLOCK = 1). If set, the OSCULP32K configuration is locked until a Power-on Reset (POR) is detected.

The OSCULP32K can be used as a source for Generic Clock Generators (GCLK) or for the Real-Time Counter (RTC). To ensure proper operation, the GCLK or RTC modules must be disabled before the clock selection is changed.

15.6.6 Watchdog Timer Clock Selection

The Watchdog Timer (WDT) uses the internal 1.024 kHz OSCULP32K output clock. This clock is running all the time and internally enabled when requested by the WDT module.

15.6.7 Real-Time Counter Clock Selection

Before enabling the RTC module, the RTC clock must be selected first. All oscillator outputs are valid as RTC clock. The selection is done in the RTC Control register (RTCCTRL). To ensure a proper operation, it is highly recommended to disable the RTC module first, before the RTC clock source selection is changed.

15.6.8 Interrupts

The OSC32KCTRL has the following interrupt sources:

- XOSC32KRDY - 32.768 kHz Crystal Oscillator Ready: A 0-to-1 transition on the STATUS.XOSC32KRDY bit is detected

- CLKFAIL - Clock Failure Detector: A 0-to-1 transition on the STATUS.CLKFAIL bit is detected
- OSC32KRDY - 32.768 kHz Internal Oscillator Ready: A 0-to-1 transition on the STATUS.OSC32KRDY bit is detected

All these interrupts are synchronous wake-up source.

Each interrupt source has an interrupt flag associated with it. The interrupt flag in the Interrupt Flag Status and Clear register (INTFLAG) is set when the interrupt condition occurs. Each interrupt can be enabled individually by setting the corresponding bit in the Interrupt Enable Set register (INTENSET), and disabled by setting the corresponding bit in the Interrupt Enable Clear register (INTENCLR). As both INTENSET and INTENCLR always reflect the same value, the status of interrupt enablement can be read from either register.

An interrupt request is generated when the interrupt flag is set and the corresponding interrupt is enabled. The interrupt request remains active until the interrupt flag is cleared, the interrupt is disabled or the OSC32KCTRL is reset. See the INTFLAG register for details on how to clear interrupt flags.

The OSC32KCTRL has one common interrupt request line for all the interrupt sources. The user must read the INTFLAG register to determine which interrupt condition is present. Refer to the INTFLAG register for details.

Note: Interrupts must be globally enabled for interrupt requests to be generated.

15.6.9 Events

The CFD can generate the following output event:

- Clock Failure Detector (CLKFAIL): Generated when the Clock Failure Detector status bit is set in the Status register (STATUS.CLKFAIL). The CFD event is not generated when the Clock Switch bit (STATUS.SWBACK) in the Status register is set.

Writing a '1' to an Event Output bit in the Event Control register (EVCTRL.CFDEO) enables the CFD output event. Writing a '0' to this bit disables the CFD output event. Refer to the Event System chapter for details on configuring the event system.

15.7 Register Summary

Offset	Name	Bit Pos.	7	6	5	4	3	2	1	0
0x00	INTENCLR	7:0						CLKFAIL	OSC32KRDY	XOSC32KRDY
		15:8								
		23:16								
		31:24								
0x04	INTENSET	7:0						CLKFAIL	OSC32KRDY	XOSC32KRDY
		15:8								
		23:16								
		31:24								
0x08	INTFLAG	7:0						CLKFAIL	OSC32KRDY	XOSC32KRDY
		15:8								
		23:16								
		31:24								
0x0C	STATUS	7:0					CLKSW	CLKFAIL	OSC32KRDY	XOSC32KRDY
		15:8								
		23:16								
		31:24								
0x10	RTCCTRL	7:0						RTCSEL[2:0]		
		15:8								
		23:16								
		31:24								
0x14	XOSC32K	7:0	ONDEMAND	RUNSTDBY		EN1K	EN32K	XTALEN	ENABLE	
		15:8				WRTLOCK		STARTUP[2:0]		
0x16	CFDCTRL	7:0						CFDPRESC	SWBACK	CFDEN
0x17	EVCTRL	7:0								CFDEO
0x18	OSC32K	7:0	ONDEMAND	RUNSTDBY			EN1K	EN32K	ENABLE	
		15:8				WRTLOCK		STARTUP[2:0]		
		23:16		CALIB[6:0]						
		31:24								
0x1C	OSCULP32K	7:0						EN1K	EN32K	
		15:8	WRTLOCK			CALIB[4:0]				
		23:16								
		31:24								

15.7.1 Interrupt Enable Clear

Name: INTENCLR
Offset: 0x00
Reset: 0x00000000
Property: PAC Write-Protection

This register allows the user to disable an interrupt without doing a read-modify-write operation. Changes in this register will also be reflected in the Interrupt Enable Set register (INTENSET).

Bit	31	30	29	28	27	26	25	24
Access								
Reset								

Bit	23	22	21	20	19	18	17	16
Access								
Reset								

Bit	15	14	13	12	11	10	9	8
Access								
Reset								

Bit	7	6	5	4	3	2	1	0
						CLKFAIL	OSC32KRDY	XOSC32KRDY
Access						R/W	R/W	R/W
Reset						0	0	0

Bit 2 – CLKFAIL XOSC32K Clock Failure Detection Interrupt Enable
Writing a '0' to this bit has no effect.
Writing a '1' to this bit will clear the XOSC32K Clock Failure Interrupt Enable bit, which disables the XOSC32K Clock Failure interrupt.

Value	Description
0	The XOSC32K Clock Failure Detection is disabled.
1	The XOSC32K Clock Failure Detection is enabled. An interrupt request will be generated when the XOSC32K Clock Failure Detection interrupt flag is set.

Bit 1 – OSC32KRDY OSC32K Ready Interrupt Enable
Writing a '0' to this bit has no effect.
Writing a '1' to this bit will clear the OSC32K Ready Interrupt Enable bit, which disables the OSC32K Ready interrupt.

Value	Description
0	The OSC32K Ready interrupt is disabled.
1	The OSC32K Ready interrupt is enabled.

Bit 0 – XOSC32KRDY XOSC32K Ready Interrupt Enable
Writing a '0' to this bit has no effect.
Writing a '1' to this bit will clear the XOSC32K Ready Interrupt Enable bit, which disables the XOSC32K Ready interrupt.

Value	Description
0	The XOSC32K Ready interrupt is disabled.
1	The XOSC32K Ready interrupt is enabled.

15.7.2 Interrupt Enable Set

Name: INTENSET
Offset: 0x04
Reset: 0x00000000
Property: PAC Write-Protection

This register allows the user to disable an interrupt without doing a read-modify-write operation. Changes in this register will also be reflected in the Interrupt Enable Clear register (INTENCLR).

Bit	31	30	29	28	27	26	25	24
Access								
Reset								

Bit	23	22	21	20	19	18	17	16
Access								
Reset								

Bit	15	14	13	12	11	10	9	8
Access								
Reset								

Bit	7	6	5	4	3	2	1	0
						CLKFAIL	OSC32KRDY	XOSC32KRDY
Access						R/W	R/W	R/W
Reset						0	0	0

Bit 2 – CLKFAIL XOSC32K Clock Failure Detection Interrupt Enable
Writing a '0' to this bit has no effect.
Writing a '1' to this bit will set the XOSC32K Clock Failure Interrupt Enable bit, which enables the XOSC32K Clock Failure interrupt.

Value	Description
0	The XOSC32K Clock Failure Detection is disabled.
1	The XOSC32K Clock Failure Detection is enabled. An interrupt request will be generated when the XOSC32K Clock Failure Detection interrupt flag is set.

Bit 1 – OSC32KRDY OSC32K Ready Interrupt Enable
Writing a '0' to this bit has no effect.
Writing a '1' to this bit will set the OSC32K Ready Interrupt Enable bit, which enables the OSC32K Ready interrupt.

Value	Description
0	The OSC32K Ready interrupt is disabled.
1	The OSC32K Ready interrupt is enabled.

Bit 0 – XOSC32KRDY XOSC32K Ready Interrupt Enable
Writing a '0' to this bit has no effect.
Writing a '1' to this bit will set the XOSC32K Ready Interrupt Enable bit, which enables the XOSC32K Ready interrupt.

Value	Description
0	The XOSC32K Ready interrupt is disabled.
1	The XOSC32K Ready interrupt is enabled.

15.7.3 Interrupt Flag Status and Clear

Name: INTFLAG
Offset: 0x08
Reset: 0x00000000
Property: –

Bit	31	30	29	28	27	26	25	24
Access								
Reset								

Bit	23	22	21	20	19	18	17	16
Access								
Reset								

Bit	15	14	13	12	11	10	9	8
Access								
Reset								

Bit	7	6	5	4	3	2	1	0
						CLKFAIL	OSC32KRDY	XOSC32KRDY
Access						R/W	R/W	R/W
Reset						0	0	0

Bit 2 – CLKFAIL XOSC32K Clock Failure Detection
This flag is cleared by writing a '1' to it.
This flag is set on a zero-to-one transition of the XOSC32K Clock Failure Detection bit in the Status register (STATUS.CLKFAIL) and will generate an interrupt request if INTENSET.CLKFAIL is '1'.
Writing a '0' to this bit has no effect.
Writing a '1' to this bit will clear the XOSC32K Clock Failure Detection flag.

Bit 1 – OSC32KRDY OSC32K Ready
This flag is cleared by writing a '1' to it.
This flag is set by a zero-to-one transition of the OSC32K Ready bit in the Status register (STATUS.OSC32KRDY), and will generate an interrupt request if INTENSET.OSC32KRDY=1.
Writing a '0' to this bit has no effect.
Writing a '1' to this bit clears the OSC32K Ready interrupt flag.

Bit 0 – XOSC32KRDY XOSC32K Ready
This flag is cleared by writing a '1' to it.
This flag is set by a zero-to-one transition of the XOSC32K Ready bit in the Status register (STATUS.XOSC32KRDY), and will generate an interrupt request if INTENSET.XOSC32KRDY=1.
Writing a '0' to this bit has no effect.
Writing a '1' to this bit clears the XOSC32K Ready interrupt flag.

15.7.4 Status

Name: STATUS
Offset: 0x0C
Reset: 0x00000000
Property: –

Bit	31	30	29	28	27	26	25	24
Access								
Reset								

Bit	23	22	21	20	19	18	17	16
Access								
Reset								

Bit	15	14	13	12	11	10	9	8
Access								
Reset								

Bit	7	6	5	4	3	2	1	0
					CLKSW	CLKFAIL	OSC32KRDY	XOSC32KRDY
Access					R	R	R	R
Reset					0	0	0	0

Bit 3 – CLKSW XOSC32K Clock Switch

Value	Description
0	XOSC32K is not switched and provided the crystal oscillator.
1	XOSC32K is switched to be provided by the safe clock.

Bit 2 – CLKFAIL XOSC32K Clock Failure Detector

Value	Description
0	XOSC32K is passing failure detection.
1	XOSC32K is not passing failure detection.

Bit 1 – OSC32KRDY OSC32K Ready

Value	Description
0	OSC32K is not ready.
1	OSC32K is stable and ready to be used as a clock source.

Bit 0 – XOSC32KRDY XOSC32K Ready

Value	Description
0	XOSC32K is not ready.
1	XOSC32K is stable and ready to be used as a clock source.

15.7.5 RTC Clock Selection Control

Name: RTCCTRL
Offset: 0x10
Reset: 0x00000000
Property: PAC Write-Protection

Bit	31	30	29	28	27	26	25	24
Access								
Reset								

Bit	23	22	21	20	19	18	17	16
Access								
Reset								

Bit	15	14	13	12	11	10	9	8
Access								
Reset								

Bit	7	6	5	4	3	2	1	0
						RTCSEL[2:0]		
Access						R/W	R/W	R/W
Reset						0	0	0

Bits 2:0 – RTCSEL[2:0] RTC Clock Source Selection
These bits select the source for the RTC.

Value	Name	Description
0x0	ULP1K	1.024 kHz from 32.768 kHz internal ULP oscillator
0x1	ULP32K	32.768 kHz from 32.768 kHz internal ULP oscillator
0x2	OSC1K	1.024 kHz from 32.768 kHz internal oscillator
0x3	OSC32K	32.768 kHz from 32.768 kHz internal oscillator
0x4	XOSC1K	1.024 kHz from 32.768 kHz external oscillator
0x5	XOSC32K	32.768 kHz from 32.768 kHz external crystal oscillator
0x6	Reserved	
0x7	Reserved	

15.7.6 32.768 kHz External Crystal Oscillator (XOSC32K) Control

Name: XOSC32K
Offset: 0x14
Reset: 0x0080
Property: PAC Write-Protection

Bit	15	14	13	12	11	10	9	8
				WRTLOCK		STARTUP[2:0]		
Access				R/W		R/W	R/W	R/W
Reset				0		0	0	0

Bit	7	6	5	4	3	2	1	0
	ONDEMAND	RUNSTDBY		EN1K	EN32K	XTALEN	ENABLE	
Access	R/W	R/W		R/W	R/W	R/W	R/W	
Reset	1	0		0	0	0	0	

Bit 12 – WRTLOCK Write Lock
This bit locks the XOSC32K register for future writes, effectively freezing the XOSC32K configuration.

Value	Description
0	The XOSC32K configuration is not locked.
1	The XOSC32K configuration is locked.

Bits 10:8 – STARTUP[2:0] Oscillator Start-Up Time
This bit field configures the time after which the XOSC32K clock will be propagated in the design. In order to let a stable clock propagate in the design, the right STARTUP time should be configured after considering the external crystal characteristics and the information provided in the 43.12 External 32kHz Crystal Oscillator (XOSC32K) Electrical Specifications section of the 43. Electrical Characteristics chapter. The actual startup time is the number of selected OSCULP32K cycles + 3 XOSC32K cycles.

Table 15-3. Start-up Time for 32.768 kHz External Crystal Oscillator

STARTUP[2:0]	Number of OSCULP32K Clock Cycles	Number of XOSC32K Clock Cycles	Approximate Equivalent Time [s]
0x0	1	3	0.000031
0x1	32	3	0.00098
0x2	2048	3	0.06
0x3	4096	3	0.125
0x4	16384	3	0.5
0x5	32768	3	1
0x6	65536	3	2
0x7	131072	3	4

Bit 7 – ONDEMAND On Demand Control
This bit controls how the XOSC32K behaves when a peripheral clock request is detected. For details, refer to XOSC32K Sleep Behavior.

Bit 6 – RUNSTDBY Run in Standby
This bit controls how the XOSC32K behaves during standby sleep mode. For details, refer to XOSC32K Sleep Behavior.

Bit 4 – EN1K 1.024 kHz Output Enable

Value	Description
0	The 1.024 kHz output is disabled.
1	The 1.024 kHz output is enabled, and available internally only for RTC.

Bit 3 – EN32K 32.768 kHz Output Enable

Value	Description
0	The 32.768 kHz output is disabled.
1	The 32.768 kHz output is enabled, and can be routed to GCLK/GCLK_IO.

Bit 2 – XTALEN Crystal Oscillator Enable

This bit controls the connections between the I/O pads and the external clock or crystal oscillator.

Value	Description
0	External clock connected on XIN32. XOUT32 can be used as general-purpose I/O.
1	Crystal connected to XIN32/XOUT32.

Bit 1 – ENABLE Oscillator Enable

Value	Description
0	The oscillator is disabled.
1	The oscillator is enabled.

15.7.7 Clock Failure Detector Control

Name: CFDCTRL
Offset: 0x16
Reset: 0x00
Property: PAC Write-Protection

Bit	7	6	5	4	3	2	1	0
						CFDPRESC	SWBACK	CFDEN
Access						R/W	R/W	R/W
Reset						0	0	0

Bit 2 – CFDPRESC Clock Failure Detector Prescaler
This bit selects the prescaler for the Clock Failure Detector.

Value	Description
0	The CFD safe clock frequency is the OSCULP32K frequency
1	The CFD safe clock frequency is the OSCULP32K frequency divided by 2

Bit 1 – SWBACK Clock Switch Back
This bit clontrols the XOSC32K output switch back to the external clock or crystal oscillator in case of clock recovery.

Value	Description
0	The clock switch is disabled.
1	The clock switch is enabled. This bit is reset when the XOSC32K output is switched back to the external clock or crystal oscillator.

Bit 0 – CFDEN Clock Failure Detector Enable
This bit selects the Clock Failure Detector state.

Value	Description
0	The CFD is disabled.
1	The CFD is enabled.

15.7.8 Event Control

Name: EVCTRL
Offset: 0x17
Reset: 0x00
Property: PAC Write-Protection

Bit	7	6	5	4	3	2	1	0
								CFDEO
Access								R/W
Reset								0

Bit 0 – CFDEO Clock Failure Detector Event Out Enable
This bit controls whether the Clock Failure Detector event output is enabled and an event will be generated when the CFD detects a clock failure.

Value	Description
0	Clock Failure Detector Event output is disabled, no event will be generated.
1	Clock Failure Detector Event output is enabled, an event will be generated.

15.7.9 32.768 kHz Internal Oscillator (OSC32K) Control

Name: OSC32K
Offset: 0x18
Reset: 0x003F 0080 (Writing action by User required)
Property: PAC Write-Protection

Bit	31	30	29	28	27	26	25	24
Access								
Reset								

Bit	23	22	21	20	19	18	17	16
		CALIB[6:0]						
Access		R/W	R/W	R/W	R/W	R/W	R/W	R/W
Reset		0	1	1	1	1	1	1

Bit	15	14	13	12	11	10	9	8
				WRTLOCK		STARTUP[2:0]		
Access				R/W		R/W	R/W	R/W
Reset				0		0	0	0

Bit	7	6	5	4	3	2	1	0
	ONDEMAND	RUNSTDBY			EN1K	EN32K	ENABLE	
Access	R/W	R/W			R/W	R/W	R/W	
Reset	1	0			0	0	0	

Bits 22:16 – CALIB[6:0] Oscillator Calibration
These bits control the oscillator calibration. The calibration values must be loaded by the user from the NVM Software Calibration Area.

Bit 12 – WRTLOCK Write Lock
This bit locks the OSC32K register for future writes, effectively freezing the OSC32K configuration.

Value	Description
0	The OSC32K configuration is not locked.
1	The OSC32K configuration is locked.

Bits 10:8 – STARTUP[2:0] Oscillator Start-Up Time
These bits select start-up time for the oscillator.
The OSCULP32K oscillator is used as input clock to the start-up counter.

Table 15-4. Start-Up Time for 32.768 kHz Internal Oscillator

STARTUP[2:0]	Number of OSC32K clock cycles
0x0	3
0x1	4
0x2	6
0x3	10
0x4	18
0x5	34
0x6	66
0x7	130

Bit 7 – ONDEMAND On Demand Control
This bit controls how the OSC32K behaves when a peripheral clock request is detected. For details, refer to OSC32K Sleep Behavior.

Bit 6 – RUNSTDBY Run in Standby
This bit controls how the OSC32K behaves during standby sleep mode. For details, refer to OSC32K Sleep Behavior.

Bit 3 – EN1K 1.024 kHz Output Enable

Value	Description
0	The 1.024 kHz output is disabled.
1	The 1.024 kHz output is enabled, and available internally only for RTC.

Bit 2 – EN32K 32.768 kHz Output Enable

Value	Description
0	The 32.768 kHz output is disabled.
1	The 32.768 kHz output is enabled, and can be routed to GCLK/GCLK_IO.

Bit 1 – ENABLE Oscillator Enable

Value	Description
0	The oscillator is disabled.
1	The oscillator is enabled.

15.7.10 32.768 kHz Ultra Low Power Internal Oscillator (OSCULP32K) Control

Name: OSCULP32K
Offset: 0x1C
Reset: 0x0000XX06
Property: PAC Write-Protection

Bit	31	30	29	28	27	26	25	24
Access								
Reset								

Bit	23	22	21	20	19	18	17	16
Access								
Reset								

Bit	15	14	13	12	11	10	9	8
	WRTLOCK			CALIB[4:0]				
Access	R/W			R/W	R/W	R/W	R/W	R/W
Reset	0			x	x	x	x	x

Bit	7	6	5	4	3	2	1	0
						EN1K	EN32K	
Access						R/W	R/W	
Reset						1	1	

Bit 15 – WRTLOCK Write Lock
This bit locks the OSCULP32K register for future writes to fix the OSCULP32K configuration.

Value	Description
0	The OSCULP32K configuration is not locked.
1	The OSCULP32K configuration is locked.

Bits 12:8 – CALIB[4:0] Oscillator Calibration
These bits control the oscillator calibration.
These bits are automatically loaded from the Flash Factory Calibration at startup.

Bit 2 – EN1K 1kHz Output Enable

Value	Description
0	The 1kHz output is disabled
1	The 1kHz output is enabled.

Bit 1 – EN32K

Value	Description
0	The 32kHz output is disabled.
1	The 32kHz output is enabled.

16. Power Manager (PM)

16.1 Overview

The Power Manager (PM) controls the sleep modes of the device.

Various sleep modes are provided in order to fit power consumption requirements. This enables the PM to stop unused modules in order to save power. In active mode, the CPU is executing application code. When the device enters a sleep mode, program execution is stopped and some modules and clock domains are automatically switched off by the PM according to the sleep mode. The application code decides which sleep mode to enter and when. Interrupts from enabled peripherals and all enabled reset sources can restore the device from a sleep mode to active mode.

16.2 Features

- Power management control:
  - Sleep modes: Idle, Standby

16.3 Block Diagram

Figure 16-1. PM Block Diagram

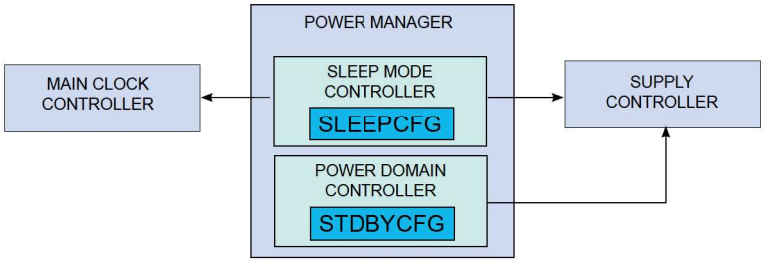

16.4 Peripheral Dependencies

Peripheral	Base Address	IRQ	AHB CLK	APB CLK	Generic CLK	PAC		Events		DMA	Sleep Walking
			Enabled at reset	Enabled at reset	Index	Index	Prot at reset	User	Generator	Index	
PM	0x40000400	0	-	Y	-	1	N	-	-	-	-

16.5 Functional Description

16.5.1 Terminology

The following is a list of terms used to describe the Power Managemement features of this microcontroller.

16.5.1.1 Sleep Modes

The device can be set in a sleep mode. In Sleep mode, the CPU is stopped and the peripherals are either active or idle, according to the Sleep mode depth:

- Idle Sleep mode: The CPU is stopped. Synchronous clocks are stopped except when requested. The logic is retained.

- Standby Sleep mode: The CPU is stopped as well as the peripherals.

16.5.2 Principle of Operation

In active mode, all clock domains and power domains are active, allowing software execution and peripheral operation. The PM Sleep Mode Controller allows to save power by choosing between different sleep modes depending on application requirements, see 16.5.3.3 Sleep Mode Controller.

The PM Power Domain Controller allows to reduce the power consumption in standby mode even further.

16.5.3 Basic Operation

16.5.3.1 Initialization

After a Power-on Reset (POR), the PM is enabled and the device is in Active mode.

16.5.3.2 Enabling, Disabling and Resetting

The PM is always enabled and can not be reset.

16.5.3.3 Sleep Mode Controller

A Sleep mode is entered by executing the Wait For Interrupt instruction (WFI). The Sleep Mode bits in the Sleep Configuration register (SLEEPCFG.SLEEPMODE) select the level of the Sleep mode.

Note: A small latency happens between the store instruction and actual writing of the SLEEPCFG register due to bridges. Software must ensure that the SLEEPCFG register reads the desired value before issuing a WFI instruction.

Table 16-1. Sleep Mode Entry and Exit Table

Mode	Mode Entry	Wake-Up Sources
IDLE	SLEEPCFG.SLEEPMODE = IDLE	Synchronous (2), asynchronous (1)
STANDBY	SLEEPCFG.SLEEPMODE = STANDBY	Synchronous(3), Asynchronous(1)

Notes:

1. Asynchronous: interrupt generated on GCLK generic clock, external clock, or external event.
2. Synchronous: interrupt generated on the APB clock.
3. Synchronous interrupt only for peripherals configured to run in standby.

Note: The type of wake-up sources (synchronous or asynchronous) is given in each module interrupt section.

The sleep modes (idle, standby) and their effect on the clocks activity, the regulator and the SRAM state are described in the table and the sections below.

Table 16-2. Sleep Mode Overview

<table>
<tr><th rowspan="2">Mode</th><th rowspan="2">CPU clock</th><th rowspan="2">AHB/APB clocks</th><th rowspan="2">Main clock</th><th rowspan="2">GCLK0 clock</th><th rowspan="2">GCLK1-8 clocks</th><th colspan="2">Clock Sources</th><th rowspan="2">Regulator</th><th rowspan="2">SRAM</th></tr>
<tr><th>ONDEMAND = 0</th><th>ONDEMAND = 1</th></tr>
<tr><td>IDLE</td><td>Stop</td><td>Run(1)</td><td>Run</td><td>Run</td><td>Run/Stop (2)</td><td>Run</td><td>Run/Stop (3)</td><td>Main</td><td>Normal</td></tr>
<tr><td rowspan="2">STANDBY</td><td rowspan="2">Stop</td><td rowspan="2">Stop (4)</td><td rowspan="2">Stop (4)</td><td colspan="2">Stop if RUNSTDBY = 0</td><td colspan="2">Stop if RUNSTDBY = 0</td><td rowspan="2">LPVREG (7)</td><td rowspan="2">Low Power (8)</td></tr>
<tr><td colspan="2">Stop/Run if RUNSTDBY = 1 (5)</td><td>Run if RUNSTDBY = 1</td><td>Stop/Run if RUNSTDBY = 1 (6)</td></tr>
</table>

Notes:

1. The AHB/APB clocks are running up to MCLK, and then provided only to the IPs requesting them. For the other IPs not requesting the clocks, they are gated at MCLK output.
2. Each GCLK1 to GCLK8 is running if the associated generated clock is requested by at least one IP. It is stopped if no IP is requesting this clock.
3. The clock source is running if the clock is requested by at least one GCLK Generator. It is stopped if no GCLK Generator is requesting this clock and will be restarted as soon as an IP requests a clock coming from a GCLK fed by this clock source.
4. The AHB/APB clocks are stopped, except if requested by at least one IP, and in this case, only provided to this/these IP(s) through GCLK0 and MCLK.
5. Each GCLK generators is stopped, except if the clock it generates is requested by at least one IP.
6. Each Clock Source is stopped, except if the clock it generates is requested by at least one GCLK Generator.
7. Regulator state is programmable by using STDBYCFG.VREGSMOD bits.
8. SRAM state is programmable by using STDBYCFG.BBIASHS bit.

16.5.3.3.1 IDLE Mode

The IDLE mode allows power optimization with the fastest wake-up time.

The CPU is stopped.

The clock source feeding the GCLK generator 0, the GCLK generator 0, and the MCLK are kept active. The AHB/APB clocks are gated at the MCLK output, unless requested by a peripheral.

The other clock sources and the GCLK generators can be running or stopped depending on each clock source ONDEMAND bit, and depending on the peripherals requesting these clocks.

If an AHB/APB clock is masked in MCLK.AHBMASK or MCLK.APBxMASK, then it is gated at the output of the MCLK and not provided to the related peripheral (regardless of the related peripheral requesting it or not).

- Entering IDLE mode: The IDLE mode is entered by setting SLEEPCFG.SLEEPMODE = IDLE and by executing the WFI instruction. Additionally, if the SLEEPONEXIT bit in the ARM Cortex System Control register (SCR) is set, the IDLE mode will also be entered when the CPU exits the lowest priority ISR. This mechanism can be useful for applications that only require the processor to run when an interrupt occurs. Before entering the IDLE mode, the user must configure the Sleep Configuration register.
- Exiting IDLE mode: The processor wakes the system up when it detects any non-masked interrupt with sufficient priority to cause exception entry. The system goes back to the ACTIVE mode. The CPU and affected modules are restarted.

In IDLE mode, the regulator and SRAM operate in normal mode.

16.5.3.3.2 Standby Mode

The Standby mode is the lowest power configuration while keeping the state of the logic and the content of the SRAM.

This mode depends on (As depicted in the previous table):

- The peripherals running in standby and requesting their asynchronous GCLK clock or their synchronous AHB/APB clock
- The RUNSTDBY bit of the GCLK generators
- The RUNSTDBY/ONDEMAND bit combination of the clock sources

Each clock source and GCLK generator can be:

- Stopped during the whole standby
- Running during the whole standby
- Automatically woken up and switched off depending on the clocks requested by the peripherals during standby (SleepWalking). For example a peripheral can run during standby and request its GCLK asynchronous clock, which will wake up the related GCLK and clock source. Another peripheral may request its APB clock, which will wake up the MCLK, GCLK generator 0 and the related clock source running. (In this case the other AHB/APB clocks are kept gated at the MCLK output).

As described above, depending on the configuration, the current consumption of the device in Standby mode can be slightly different.

All features that don't require CPU intervention are supported in Standby mode. Here are examples:

- Autonomous peripherals features.
- Features relying on Event System allowing autonomous communication between peripherals.
- Features relying on on-demand clock.
- DMA transfers.

Entering Standby mode: This mode is entered by setting SLEEPCFG.SLEEPMODE = STANDBY and by executing the WFI instruction. The SLEEPONEXIT feature is also available as in IDLE mode.

Exiting Standby mode: Any peripheral able to generate an asynchronous interrupt can wake up the system. For example, a peripheral running on a GCLK clock can trigger an interrupt. When the enabled asynchronous wake-up event occurs and the system is woken up, the device will either execute the interrupt service routine or continue the normal program execution according to the Priority Mask Register (PRIMASK) configuration of the CPU.

16.5.4 Advanced Features

16.5.4.1 SRAM Automatic Low-Power Mode

The SRAM is by default put in Low-Power mode (back-biased) if the device is in Standby Sleep mode.

This behavior can be changed by configuring the Back Bias bit in the Standby Configuration register (STDBYCFG.BBIASHS), refer to the table below for details.

Note: In Standby Sleep mode, the SRAM is put in Low-Power mode by default. This means that the SRAM is back-biased, and the DMAC cannot access it. The DMAC can only access the SRAM when it is not back biased (PM.STDBYCFG.BBIASHS=0x0). When the SysTick Overflow Interrupt is enabled the RAM Back Bias Control must be disabled (PM->STDBYCFG.bit.BBIASHS = 0) before entering Standby sleep mode.

Table 16-3. RAM Back-Biasing Mode

STBYCDFG.BBIASHS		SRAM
0x0	No Back Biasing	SRAM is not back-biased if the device is in Standby Sleep mode.
0x1	Standby Back Biasing mode	SRAM is back-biased if the device is in Standby Sleep mode.

16.5.4.2 Regulator Automatic Low-Power Mode

In Standby mode, the PM selects either the main or the low-power voltage regulator to supply the VDDCORE. By default the low-power voltage regulator is used.

If a sleepwalking task is working on either asynchronous clocks (generic clocks) or synchronous clock (APB/AHB clocks), the main voltage regulator is used. This behavior can be changed by writing the Voltage Regulator Standby Mode bits in the Standby Configuration register (STDBYCFG.VREGSMOD). Refer to the following table for details.

Table 16-4. Regulator State in Sleep Mode

Sleep Mode	STDBYCFG. VREGSMOD	SleepWalking	Regulator state for VDDCORE
Active	-	-	main-voltage regulator
Idle	-	-	main-voltage regulator
Standby	0x0: Auto	No	low-power regulator
		Yes	main-voltage regulator
	0x1: Performance	-	main-voltage regulator
	0x2: LP	-	low-power regulator

16.5.5 Sleep Mode Operation

The Power Manager is always active.

16.6 Register Summary

Offset	Name	Bit Pos.	7	6	5	4	3	2	1	0
0x00	Reserved									
0x01	SLEEPCFG	7:0						SLEEPMODE[2:0]		
0x02 ... 0x07	Reserved									
0x08	STDBYCFG	7:0	VREGSMOD[1:0]							
		15:8						BBIASHS		

16.6.1 Sleep Configuration

Name: SLEEPCFG
Offset: 0x01
Reset: 0x00
Property: PAC Write-Protection

Bit	7	6	5	4	3	2	1	0
						SLEEPMODE[2:0]		
Access						R/W	R/W	R/W
Reset						0	0	0

Bits 2:0 – SLEEPMODE[2:0] Sleep Mode
Note: A small latency happens between the store instruction and actual writing of the SLEEPCFG register due to bridges. Software has to make sure the SLEEPCFG register reads the wanted value before issuing Wait For Interrupt (WFI) instruction.

Value	Name
0x0	Reserved
0x1	Reserved
0x2	IDLE
0x3	Reserved
0x4	STANDBY
0x5 - 0x7	Reserved

16.6.2 Standby Configuration

Name: STDBYCFG
Offset: 0x08
Reset: 0x0400
Property: PAC Write-Protection

Bit	15	14	13	12	11	10	9	8
						BBIASHS		
Access						R/W		
Reset						1		

Bit	7	6	5	4	3	2	1	0
	VREGSMOD[1:0]							
Access	R/W	R/W						
Reset	0	0						

Bit 10 – BBIASHS Back Bias for SRAM
Refer to 16.5.4.1 SRAM Automatic Low-Power Mode for details.

Value	Description
0	No Back Biasing Mode
1	Standby Back Biasing Mode

Bits 7:6 – VREGSMOD[1:0] VREG Switching Mode
Refer to for 16.5.4.2 Regulator Automatic Low-Power Mode details.

Value	Name	Description
0x0	AUTO	Automatic Mode
0x1	PERFORMANCE	Performance oriented
0x2	LP	Low-Power consumption oriented
0x3	Reserved	Reserved

17. Supply Controller (SUPC)

17.1 Overview

The Supply Controller (SUPC) manages the voltage reference and power supply of the device. The SUPC controls the voltage regulators for the core (VDDCORE) domain. It sets the voltage regulators according to the sleep modes, or the user configuration.

The SUPC embeds two Brown-out Detectors: BODVDD monitors the voltage applied to the device (VDD) and BODCORE monitors the internal voltage to the core (VDDCORE). The BOD can monitor the supply voltage continuously (continuous mode) or periodically (sampling mode).

The SUPC generates also a selectable reference voltage which can be used by analog modules, such as the ADC, SDADC or DAC.

17.2 Features

- Voltage Regulator System
  - Main voltage regulator: LDO in Active mode (MAINVREG)
  - Low-power voltage regulator in Standby mode (LPVREG)
- Voltage Reference System
  - Reference voltage for ADC, SDADC and DAC
- VDD Brown-out Detector (BODVDD)
  - Programmable threshold
  - Threshold value loaded from NVM User Row at startup
  - Triggers resets or interrupts. Action loaded from NVM User Row
  - Operating modes:
    - Continuous mode
    - Sampled mode for low-power applications with programmable sample frequency
  - Hysteresis value from Flash User Calibration
- VDDCORE Brown-out Detector (BODCORE)
  - Internal non-configurable Brown-out Detector

17.3 Block Diagram

Figure 17-1. SUPC Block Diagram

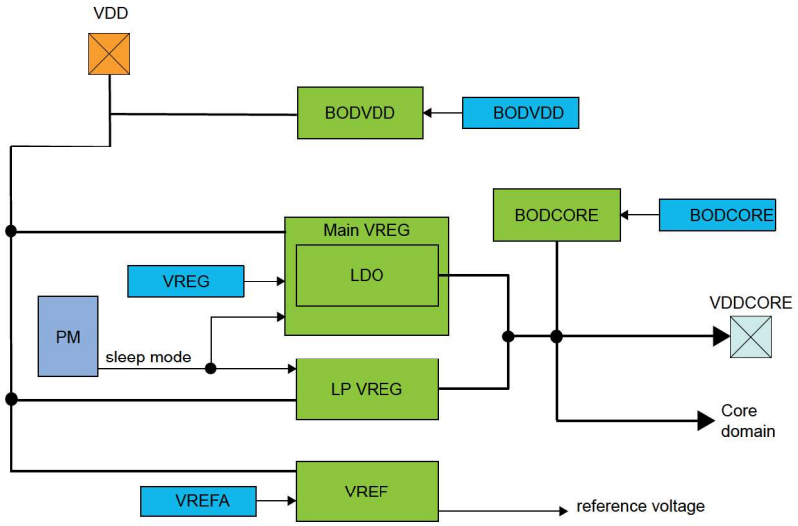

17.4 Peripheral Dependencies

Peripheral	Base Address	IRQ	AHB CLK	APB CLK	Generic CLK	PAC		Events		DMA	Sleep Walking
			Enabled at reset	Enabled at reset	Index	Index	Prot at reset	User	Generator	Index	
SUPC	0x40001800	0	-	Y	-	6	N	-	2: XOSC32K_FAIL	-	-

17.5 Functional Description

17.5.1 Voltage Regulator System Operation

17.5.1.1 Enabling, Disabling, and Resetting

The LDO main voltage regulator is enabled after any Reset. The main voltage regulator (MAINVREG) can be disabled by writing the Enable bit in the VREG register (VREG.ENABLE) to zero. The main voltage regulator output supply level is automatically defined by the sleep mode selected in the Power Manager module.

17.5.1.2 Initialization

After a Reset, the LDO voltage regulator supplying VDDCORE is enabled.

17.5.1.3 Sleep Mode Operation

In Standby mode, the low-power voltage regulator (LPVREG) is used to supply VDDCORE.

When the Run in Standby bit in the VREG register (VREG.RUNSTDBY) is written to '1', VDDCORE is supplied by the main voltage regulator. The VDDCORE level is set to the active mode voltage level.

17.5.2 Voltage Reference System Operation

The INTREF internal reference voltage is generated by the bandgap in the SUPC. Refer to the SEL bit in the VREF register for voltage level selection.

17.5.2.1 Initialization

The voltage reference output is disabled after any Reset.

17.5.2.2 Enabling, Disabling, and Resetting

The voltage reference output is enabled/disabled by setting/clearing the Voltage Reference Output Enable bit in the Voltage Reference register (VREF.VREFOE).

17.5.2.3 Selecting a Voltage Reference

The Voltage Reference Selection bit field in the VREF register (VREF.SEL) selects the voltage of INTREF (supplied by the bandgap) to be applied to analog modules, for example, the ADC.

17.5.2.4 Sleep Mode Operation

The Voltage Reference output behavior during Sleep mode can be configured using the Run in Standby bit and the On Demand bit in the Voltage Reference register (VREF.RUNSTDBY, VREF.ONDEMAND), see the following table:

Table 17-1. VREF Sleep Mode Operation

VREF.ONDEMAND	VREF.RUNSTDBY	Voltage Reference Sleep behavior
0	0	Always run in all sleep modes *except* Standby Sleep mode.
0	1	Always run in all sleep modes *including* Standby Sleep mode.
1	0	Only run if requested by the ADC, in all sleep modes *except* Standby Sleep mode.
1	1	Only run if requested by the ADC, in all sleep modes *including* Standby Sleep mode.

17.5.3 Brown-out Detectors

17.5.3.1 Initialization

Before a Brown-out Detector (BODVDD) is enabled, it must be configured, as outlined by the following:

- Set the BOD threshold level (BODVDD.LEVEL)
- Set the configuration in Active, Standby (BODVDD.ACTION, BODVDD.STDBYCFG)
- Set the prescaling value if the BOD will run in sampling mode (BODVDD.PSEL)
- Set the action and hysteresis (BODVDD.ACTION and BODVDD.HYST)

The BODVDD register is Enable-Protected, meaning that they can only be written when the BOD is disabled (BODVDD.ENABLE = 0 and STATUS.BVDDSRDY = 0). As long as the Enable bit is '1', any writes to Enable-Protected registers will be discarded, and an APB error will be generated. The Enable bits are not Enable-Protected.

17.5.3.2 Enabling, Disabling, and Resetting

After power or user reset, the BODVDD and BODCORE register values are loaded from the NVM User Row.

The BODVDD is enabled by writing a '1' to the Enable bit in the BOD control register (BODVDD.ENABLE). The BOD is disabled by writing a '0' to the BODVDD.ENABLE.

17.5.3.3 VDD Brown-out Detector (BODVDD)

The VDD Brown-out Detector (BODVDD) is able to monitor the VDD supply and compares the voltage with the brown-out threshold level set in the BODVDD Level field (BODVDD.LEVEL) in the BODVDD register.

When VDD crosses below the brown-out threshold level, the BODVDD can generate either an interrupt or a Reset, depending on the BODVDD Action bit field (BODVDD.ACTION).

The BODVDD detection status can be read from the BODVDD Detection bit in the Status register (STATUS.BODVDDDET).

At start-up or at Power-on Reset (POR), the BODVDD register values are loaded from the NVM User Row.

17.5.3.4 VDDCORE Brown-Out Detector (BODCORE)

The BODCORE is calibrated in production and its calibration configuration is stored in the NVM User Row. This configuration must not be changed to assure the correct behavior of the BODCORE. The BODCORE generates a reset when VDDCORE crosses below the preset brown-out level. The BODCORE is always disabled in Standby Sleep mode.

17.5.3.5 Continuous Mode

Continuous mode is the default mode for BODVDD.

The BODVDD is continuously monitoring the VDD supply voltage if it is enabled (BODVDD.ENABLE = 1) and if the BODVDD Configuration bit in the BODVDD register is cleared (BODVDD.ACTCFG = 0 for active mode, BODVDD.STDBYCFG = 0 for Standby mode).

17.5.3.6 Sampling Mode

The Sampling Mode is a Low-Power mode where the BODVDD is being repeatedly enabled on a sampling clock's ticks. The BODVDD will monitor the supply voltage for a short period of time and then go to a low-power disabled state until the next sampling clock tick.

Sampling mode is enabled in Active mode for BODVDD by writing the ACTCFG bit (BODVDD.ACTCFG = 1). Sampling mode is enabled in Standby mode by writing to the STDBYCFG bit (BODVDD.STBYCFG = 1). The frequency of the clock ticks ($F_{clksampling}$) is controlled by the Prescaler Select bit groups in the BODVDD register (BODVDD.PSEL).

$$F_{clksampling} = \frac{F_{clkprescaler}}{2^{(\mathrm{PSEL}+1)}}$$

The prescaler signal ($F_{clkprescaler}$) is a 1.024 kHz clock, output by the 32.768 kHz Ultra Low-Power Oscillator OSCULP32K.

As the sampling clock is different from the APB clock domain, synchronization among the clocks is necessary. See also 17.5.5 Synchronization.

17.5.3.7 Hysteresis

A hysteresis on the trigger threshold of a BOD will reduce the sensitivity to ripples on the monitored voltage: instead of switching $\overline{\text{RESET}}$ at each crossing of V_{BOD}, the thresholds for switching $\overline{\text{RESET}}$ on and off are separated (V_{BOD-} and V_{BOD+}, respectively).

Figure 17-2. BOD Hysteresis Principle

Hysteresis OFF:

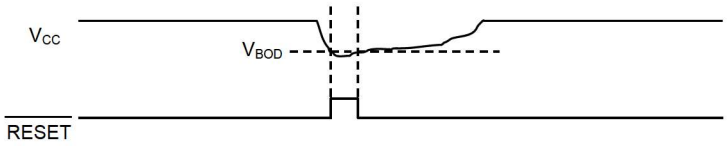

Hysteresis ON:

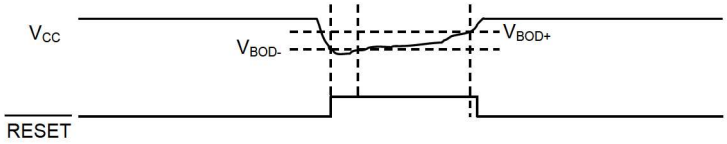

Enabling the BODVDD hysteresis by writing the Hysteresis bit in the BODVDD register (BODVDD.HYST) to '1' will add hysteresis to the BODVDD threshold level.

The hysteresis functionality can be used in both Continuous and Sampling Mode (Refer to the 43. Electrical Characteristics section for more information on the hysteresis values).

17.5.3.8 Sleep Mode Operation

17.5.3.8.1 Standby Mode

The BODVDD can be used in Standby mode if the BOD is enabled and the corresponding Run in Standby bit is written to '1' (BODVDD.RUNSTDBY).

The BODVDD can be configured to work in either Continuous or Sampling Mode by writing a '1' to the Configuration in Standby Sleep Mode bit (BODVDD.STDBYCFG).

17.5.4 Interrupts

The SUPC has the following interrupt sources, which are either synchronous or asynchronous wake-up sources:

- BODVDD Ready (BODVDDRDY), synchronous
- BODVDD Detection (BODVDDDET), asynchronous
- BODVDD Synchronization Ready (BVDDSRDY), synchronous

Each interrupt source has an interrupt flag associated with it. The interrupt flag in the Interrupt Flag Status and Clear register (INTFLAG) is set when the interrupt condition occurs.

Each interrupt can be individually enabled by writing a '1' to the corresponding bit in the Interrupt Enable Set register (INTENSET), and disabled by writing a '1' to the corresponding bit in the Interrupt Enable Clear register (INTENCLR). As both INTENSET and INTENCLR always reflect the same value, the status of interrupt enablement can be read from either register.

An interrupt request is generated when the interrupt flag is set and the corresponding interrupt is enabled. The interrupt request remains active until either the interrupt flag is cleared, the interrupt is disabled, or the SUPC is reset. See the INTFLAG register for details on how to clear interrupt flags. The SUPC has one common interrupt request line for all the interrupt sources. The user must read the INTFLAG register to determine which interrupt condition is present.

Note: Interrupts must be globally enabled for interrupt requests to be generated.

17.5.5 Synchronization

The prescaler counters that are used to trigger brown-out detections operate asynchronously from the peripheral bus. As a consequence, the BODVDD Enable bit (BODVDD.ENABLE) need synchronization when written.

The Write-Synchronization of the Enable bit is triggered by writing a '1' to the Enable bit of the BODVDD Control register. The Synchronization Ready bit (STATUS.BVDDSRDY) in the STATUS register will be cleared when the Write-Synchronization starts, and set again when the Write-Synchronization is complete. Writing to the same register while the Write-Synchronization is ongoing (STATUS.BVDDSRDY is '0') will generate a PAC error without stalling the APB bus.

17.6 Register Summary

Offset	Name	Bit Pos.	7	6	5	4	3	2	1	0
0x00	INTENCLR	7:0						BVDDSRDY	BODVDDDET	BODVDDRDY
		15:8								
		23:16								
		31:24								
0x04	INTENSET	7:0						BVDDSRDY	BODVDDDET	BODVDDRDY
		15:8								
		23:16								
		31:24								
0x08	INTFLAG	7:0						BVDDSRDY	BODVDDDET	BODVDDRDY
		15:8								
		23:16								
		31:24								
0x0C	STATUS	7:0						BVDDSRDY	BODVDDDET	BODVDDRDY
		15:8								
		23:16								
		31:24								
0x10	BODVDD	7:0		RUNSTDBY	STDBYCFG	ACTION[1:0]		HYST	ENABLE	
		15:8	PSEL[3:0]							ACTCFG
		23:16			LEVEL[5:0]					
		31:24								
0x14 ... 0x17	Reserved									
0x18	VREG	7:0		RUNSTDBY					ENABLE	
		15:8								
		23:16								
		31:24								
0x1C	VREF	7:0	ONDEMAND	RUNSTDBY				VREFOE		
		15:8								
		23:16					SEL[3:0]			
		31:24								

17.6.1 Interrupt Enable Clear

Name: INTENCLR
Offset: 0x00
Reset: 0x00000000
Property: PAC Write-Protection

This register allows the user to disable an interrupt without doing a read-modify-write operation. Changes in this register will also be reflected in the Interrupt Enable Set register (INTENSET).

Bit	31	30	29	28	27	26	25	24
Access								
Reset								

Bit	23	22	21	20	19	18	17	16
Access								
Reset								

Bit	15	14	13	12	11	10	9	8
Access								
Reset								

Bit	7	6	5	4	3	2	1	0
						BVDDSRDY	BODVDDDET	BODVDDRDY
Access						R/W	R/W	R/W
Reset						0	0	0

Bit 2 – BVDDSRDY BODVDD Synchronization Ready Interrupt Enable
Writing a '0' to this bit has no effect.
Writing a '1' to this bit will clear the BODVDD Synchronization Ready Interrupt Enable bit, which disables the BODVDD Synchronization Ready interrupt.

Value	Description
0	The BODVDD Synchronization Ready interrupt is disabled.
1	The BODVDD Synchronization Ready interrupt is enabled, and an interrupt request will be generated when the BODVDD Synchronization Ready Interrupt flag is set.

Bit 1 – BODVDDDET BODVDD Detection Interrupt Enable
Writing a '0' to this bit has no effect.
Writing a '1' to this bit will clear the BODVDD Detection Interrupt Enable bit, which disables the BODVDD Detection interrupt.

Value	Description
0	The BODVDD Detection interrupt is disabled.
1	The BODVDD Detection interrupt is enabled, and an interrupt request will be generated when the BODVDD Detection Interrupt flag is set.

Bit 0 – BODVDDRDY BODVDD Ready Interrupt Enable
Writing a '0' to this bit has no effect.
Writing a '1' to this bit will clear the BODVDD Ready Interrupt Enable bit, which disables the BODVDD Ready interrupt.

Value	Description
0	The BODVDD Ready interrupt is disabled.
1	The BODVDD Ready interrupt is enabled, and an interrupt request will be generated when the BODVDD Ready Interrupt flag is set.

17.6.2 Interrupt Enable Set

Name: INTENSET
Offset: 0x04
Reset: 0x00000000
Property: PAC Write-Protection

This register allows the user to disable an interrupt without doing a read-modify-write operation. Changes in this register will also be reflected in the Interrupt Enable Clear register (INTENCLR).

Bit	31	30	29	28	27	26	25	24
Access								
Reset								

Bit	23	22	21	20	19	18	17	16
Access								
Reset								

Bit	15	14	13	12	11	10	9	8
Access								
Reset								

Bit	7	6	5	4	3	2	1	0
						BVDDSRDY	BODVDDDET	BODVDDRDY
Access						R/W	R/W	R/W
Reset						0	0	0

Bit 2 – BVDDSRDY BODVDD Synchronization Ready Interrupt Enable
Writing a '0' to this bit has no effect.
Writing a '1' to this bit will set the BODVDD Synchronization Ready Interrupt Enable bit, which enables the BODVDD Synchronization Ready interrupt.

Value	Description
0	The BODVDD Synchronization Ready interrupt is disabled.
1	The BODVDD Synchronization Ready interrupt is enabled, and an interrupt request will be generated when the BODVDD Synchronization Ready Interrupt flag is set.

Bit 1 – BODVDDDET BODVDD Detection Interrupt Enable
Writing a '0' to this bit has no effect.
Writing a '1' to this bit will set the BODVDD Detection Interrupt Enable bit, which enables the BODVDD Detection interrupt.

Value	Description
0	The BODVDD Detection interrupt is disabled.
1	The BODVDD Detection interrupt is enabled, and an interrupt request will be generated when the BODVDD Detection Interrupt flag is set.

Bit 0 – BODVDDRDY BODVDD Ready Interrupt Enable
Writing a '0' to this bit has no effect.
Writing a '1' to this bit will set the BODVDD Ready Interrupt Enable bit, which enables the BODVDD Ready interrupt.

Value	Description
0	The BODVDD Ready interrupt is disabled.
1	The BODVDD Ready interrupt is enabled, and an interrupt request will be generated when the BODVDD Ready Interrupt flag is set.

17.6.3 Interrupt Flag Status and Clear

Name: INTFLAG
Offset: 0x08
Reset: X determined from NVM User Row
Property: -

Bit	31	30	29	28	27	26	25	24
Access								
Reset								

Bit	23	22	21	20	19	18	17	16
Access								
Reset								

Bit	15	14	13	12	11	10	9	8
Access								
Reset								

Bit	7	6	5	4	3	2	1	0
						BVDDSRDY	BODVDDDET	BODVDDRDY
Access						R/W	R/W	R/W
Reset						0	0	x

Bit 2 – BVDDSRDY BODVDD Synchronization Ready
This flag is cleared by writing a '1' to it.
This flag is set on a zero-to-one transition of the BODVDD Synchronization Ready bit in the Status register (STATUS.BVDDSRDY) and will generate an interrupt request if INTENSET.BVDDSRDY=1.
Writing a '0' to this bit has no effect.
Writing a '1' to this bit clears the BODVDD Synchronization Ready interrupt flag.

Bit 1 – BODVDDDET BODVDD Detection
This flag is cleared by writing a '1' to it.
This flag is set on a zero-to-one transition of the BODVDD Detection bit in the Status register (STATUS.BODVDDDET) and will generate an interrupt request if INTENSET.BODVDDDET=1.
Writing a '0' to this bit has no effect.
Writing a '1' to this bit clears the BODVDD Detection interrupt flag.

Bit 0 – BODVDDRDY BODVDD Ready
This flag is cleared by writing a '1' to it.
This flag is set on a zero-to-one transition of the BODVDD Ready bit in the Status register (STATUS.BODVDDRDY) and will generate an interrupt request if INTENSET.BODVDDRDY=1.
Writing a '0' to this bit has no effect.
Writing a '1' to this bit clears the BODVDD Ready interrupt flag.
The BODVDD can be enabled.

17.6.4 Status

Name: STATUS
Offset: 0x0C
Reset: Determined from NVM User Row
Property: -

Bit	31	30	29	28	27	26	25	24
Access								
Reset								

Bit	23	22	21	20	19	18	17	16
Access								
Reset								

Bit	15	14	13	12	11	10	9	8
Access								
Reset								

Bit	7	6	5	4	3	2	1	0
						BVDDSRDY	BODVDDDET	BODVDDRDY
Access						R	R	R
Reset						0	0	y

Bit 2 – BVDDSRDY BODVDD Synchronization Ready

Value	Description
0	BODVDD synchronization is ongoing.
1	BODVDD synchronization is complete.

Bit 1 – BODVDDDET BODVDD Detection

Value	Description
0	No BODVDD detection.
1	BODVDD has detected that the I/O power supply is going below the BODVDD reference value.

Bit 0 – BODVDDRDY BODVDD Ready

The BODVDD can be enabled at start-up from NVM User Row.

Value	Description
0	BODVDD is not ready.
1	BODVDD is ready.

17.6.5 VDD Brown-Out Detector (BODVDD) Control

Name: BODVDD
Offset: 0x10
Reset: X determined from NVM User Row
Property: Write-Synchronized Bits, Enable-Protected Bits, PAC Write-Protection

Bit	31	30	29	28	27	26	25	24
Access								
Reset								

Bit	23	22	21	20	19	18	17	16
			LEVEL[5:0]					
Access			R/W	R/W	R/W	R/W	R/W	R/W
Reset			x	x	x	x	x	x

Bit	15	14	13	12	11	10	9	8
	PSEL[3:0]							ACTCFG
Access	R/W	R/W	R/W	R/W				R/W
Reset	0	0	0	0				0

Bit	7	6	5	4	3	2	1	0
		RUNSTDBY	STDBYCFG	ACTION[1:0]		HYST	ENABLE	
Access		R/W	R/W	R/W	R/W	R/W	R/W	
Reset		0	0	x	x	x	x	

Bits 21:16 – LEVEL[5:0] BODVDD Threshold Level on VDD
These bits set the triggering voltage threshold for the BODVDD when the BODVDD monitors the VDD.
These bits are loaded from NVM User Row at start-up.
Note: This bit field is enable-protected. This bit field is not synchronized.

Bits 15:12 – PSEL[3:0] Prescaler Select
Selects the prescaler divide-by output for the BODVDD sampling mode. The input clock comes from the OSCULP32K 1.024 kHz output.
Note: This bit field is enable-protected. This bit field is not synchronized.

Value	Name	Description
0x0	DIV2	Divide clock by 2
0x1	DIV4	Divide clock by 4
0x2	DIV8	Divide clock by 8
0x3	DIV16	Divide clock by 16
0x4	DIV32	Divide clock by 32
0x5	DIV64	Divide clock by 64
0x6	DIV128	Divide clock by 128
0x7	DIV256	Divide clock by 256
0x8	DIV512	Divide clock by 512
0x9	DIV1024	Divide clock by 1024
0xA	DIV2048	Divide clock by 2048
0xB	DIV4096	Divide clock by 4096
0xC	DIV8192	Divide clock by 8192
0xD	DIV16384	Divide clock by 16384
0xE	DIV32768	Divide clock by 32768
0xF	DIV65536	Divide clock by 65536

Bit 8 – ACTCFG BODVDD Configuration in Active Mode
Note: This bit is enable-protected. This bit is not synchronized.

Value	Description
0	In active mode, the BODVDD operates in continuous mode.
1	In active mode, the BODVDD operates in sampling mode.

Bit 6 – RUNSTDBY Run in Standby
Note: This bit is enable-protected. This bit is not synchronized.

Value	Description
0	In standby sleep mode, the BODVDD is disabled.
1	In standby sleep mode, the BODVDD is enabled.

Bit 5 – STDBYCFG BODVDD Configuration in Standby Sleep Mode
If the RUNSTDBY bit is set to '1', the STDBYCFG bit sets the BODVDD configuration in standby sleep mode.
Note: This bit is enable-protected. This bit is not synchronized.

Value	Description
0	In standby sleep mode, the BODVDD is configured in continuous mode.
1	In standby sleep mode, the BODVDD is configured in sampling mode.

Bits 4:3 – ACTION[1:0] BODVDD Action
These bits are used to select the BODVDD action when the supply voltage crosses below the BODVDD threshold.
These bits are loaded from NVM User Row at start-up.
Note: This bit field is enable-protected. This bit field is not synchronized.

Value	Name	Description
0x0	NONE	No action
0x1	RESET	The BODVDD generates a reset
0x2	INT	The BODVDD generates an interrupt
0x3	-	Reserved

Bit 2 – HYST Hysteresis
This bit indicates whether hysteresis is enabled for the BODVDD threshold voltage.
This bit is loaded from NVM User Row at start-up.
Note: This bit is enable-protected. This bit is not synchronized.

Value	Description
0	No hysteresis.
1	Hysteresis enabled.

Bit 1 – ENABLE Enable
This bit is loaded from NVM User Row at start-up.
Notes:

1. This bit is write-synchronized: STATUS.BVDDSRDY must be checked to ensure the BODVDD.ENABLE synchronization is complete.
2. This bit is not enable-protected.

Value	Description
0	BODVDD is disabled.
1	BODVDD is enabled.

17.6.6 Voltage Regulator System (VREG) Control

Name: VREG
Offset: 0x18
Reset: 0x00000002
Property: PAC Write-Protection

Bit	31	30	29	28	27	26	25	24
Access	R	R	R	R	R	R	R	R
Reset	0	0	0	0	0	0	0	0

Bit	23	22	21	20	19	18	17	16
Access	R	R	R	R	R	R	R	R
Reset	0	0	0	0	0	0	0	0

Bit	15	14	13	12	11	10	9	8
Access	R	R	R	R	R	R	R	R
Reset	0	0	0	0	0	0	0	0

Bit	7	6	5	4	3	2	1	0
		RUNSTDBY					ENABLE	
Access	R	R/W	R	R	R	R	R/W	R
Reset	0	0	0	0	0	0	1	0

Bit 6 – RUNSTDBY Run in Standby

Value	Description
0	The voltage regulator is in Low-Power mode in Standby-Sleep mode.
1	The voltage regulator is in normal mode in Standby-Sleep mode.

Bit 1 – ENABLE Must be set to 1.

17.6.7 Voltage References System (VREF) Control

Name: VREF
Offset: 0x1C
Reset: 0x00000000
Property: PAC Write-Protection

Bit	31	30	29	28	27	26	25	24
Access								
Reset								

Bit	23	22	21	20	19	18	17	16
					SEL[3:0]			
Access					R/W	R/W	R/W	R/W
Reset					0	0	0	0

Bit	15	14	13	12	11	10	9	8
Access								
Reset								

Bit	7	6	5	4	3	2	1	0
	ONDEMAND	RUNSTDBY				VREFOE		
Access	R/W	R/W				R/W		
Reset	0	0				0		

Bits 19:16 – SEL[3:0] Voltage Reference Selection
These bits select the Voltage Reference (INTREF) for the AC / ADC / DAC / SDADC.

Value	Description
0x0	1.024V voltage reference typical value.
0x2	2.048V voltage reference typical value.
0x3	4.096V voltage reference typical value.
Others	Reserved

Bit 7 – ONDEMAND On Demand Control
The On Demand operation mode allows to enable or disable the voltage reference depending on peripheral requests.

Value	Description
0	The voltage reference is always on, if enabled.
1	The voltage reference is enabled when a peripheral is requesting it. The voltage reference is disabled if no peripheral is requesting it.

Bit 6 – RUNSTDBY Run In Standby
The bit controls how the voltage reference behaves during Standby Sleep mode.

Value	Description
0	The voltage reference is halted during Standby sleep mode.
1	The voltage reference is not stopped in Standby sleep mode. If VREF.ONDEMAND = 1, the voltage reference will be running when a peripheral is requesting it. If VREF.ONDEMAND = 0, the voltage reference will always be running in standby sleep mode.

Bit 2 – VREFOE Voltage Reference (INTREF) Output Enable

Value	Description
0	The Voltage Reference output (INTREF) is not available as an ADC input channel.
1	The Voltage Reference output (INTREF) is routed to an ADC input channel.

18. Reset Controller (RSTC)

18.1 Overview

The Reset Controller (RSTC) manages the reset of the microcontroller. It issues a microcontroller reset, sets the device to its initial state and allows the reset source to be identified by software.

18.2 Features

- Reset the microcontroller and set it to an initial state according to the reset source
- Reset cause register for reading the reset source from the application code
- Multiple reset sources
  - Power supply reset sources: POR, BODCORE, BODVDD
  - User reset sources: External reset ($\overline{\text{RESET}}$), Watchdog reset, and System Reset Request

18.3 Block Diagram

Figure 18-1. Reset System

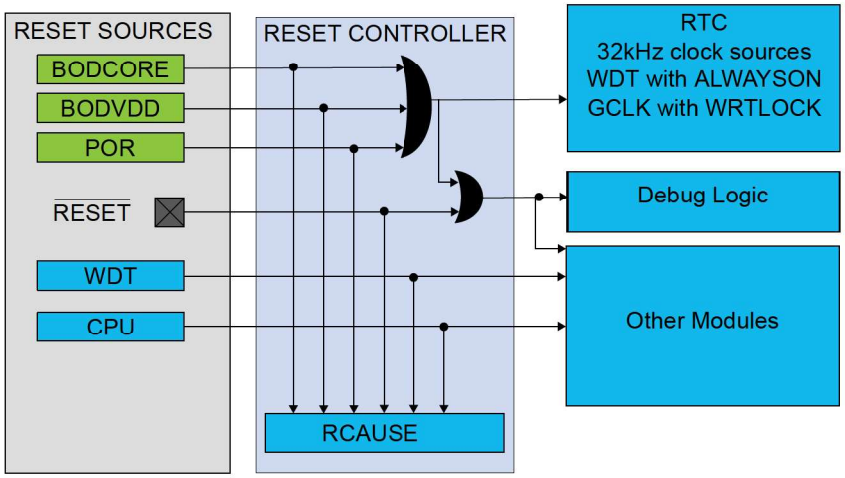

18.4 Signal Description

Signal Name	Type	Description
$\overline{\text{RESET}}$	Digital input	External reset pin

18.5 Peripheral Dependencies

Peripheral	Base Address	IRQ	AHB CLK	APB CLK	Generic CLK	PAC		Events		DMA	Sleep Walking
			Enabled at reset	Enabled at reset	Index	Index	Prot at reset	User	Generator	Index	
RSTC	0x40000C00	-	-	Y	-	3	N	-	-	-	-

18.6 Functional Description

18.6.1 Principle of Operation

The Reset Controller collects the various Reset sources and generates Reset for the device.

18.6.2 Basic Operation

18.6.2.1 Initialization

After a power-on Reset, the RSTC is enabled and the Reset Cause (RCAUSE) register indicates the POR source.

18.6.2.2 Enabling, Disabling, and Resetting

The RSTC module is always enabled.

18.6.2.3 Reset Causes and Effects

The latest Reset cause is available in RCAUSE register, and can be read during the application boot sequence in order to determine proper action.

These are the groups of Reset sources:

- Power supply Reset: Resets caused by an electrical issue. It covers POR and BODs Resets
- User Reset: Resets caused by the application. It covers external Resets, system Reset requests and watchdog Resets

The following table lists the parts of the device that are reset, depending on the Reset type.

Table 18-1. Effects of the Different Reset Causes

	Power Supply Reset	User Reset	
	POR, BODVDD, BODCORE	External Reset	WDT Reset, System Reset Request
RTC, OSC32KCTRL, RSTC	Reset	-	-
GCLK with WRTLOCK	Reset	-	-
Debug logic	Reset	Reset	-
Others	Reset	Reset	Reset

The external Reset is generated when pulling the $\overline{\text{RESET}}$ pin low.

The POR, BODCORE, and BODVDD Reset sources are generated by their corresponding module in the Supply Controller Interface (SUPC).

The WDT Reset is generated by the Watchdog Timer.

The System Reset Request is a Reset generated by the CPU when asserting the SYSRESETREQ bit located in the Reset Control register of the CPU (for details refer to the Arm Cortex Technical Reference Manual on http://www.arm.com).

Note: Refer to the *TRST specification* in the Power Supply section of the Electrical Characteristics chapter.

18.6.3 Sleep Mode Operation

The RSTC module is active in all sleep modes.

18.7 Register Summary

Offset	Name	Bit Pos.	7	6	5	4	3	2	1	0
0x00	RCAUSE	7:0		SYST	WDT	EXT		BODVDD	BODCORE	POR

18.7.1 Reset Cause

Name: RCAUSE
Offset: 0x00
Property: –

When a Reset occurs, the bit corresponding to the Reset source is set to '1' and all other bits are written to '0'.

Bit	7	6	5	4	3	2	1	0
		SYST	WDT	EXT		BODVDD	BODCORE	POR
Access		R	R	R		R	R	R
Reset		x	x	x		x	x	x

Bit 6 – SYST System Reset Request
This bit is set if a System Reset Request has occurred. Refer to the Cortex processor documentation for more details.

Bit 5 – WDT Watchdog Reset
This bit is set if a Watchdog Timer Reset has occurred.

Bit 4 – EXT External Reset
This bit is set if an external Reset has occurred.

Bit 2 – BODVDD Brown Out VDD Detector Reset
This bit is set if a BODVDD Reset has occurred.

Bit 1 – BODCORE Brown Out CORE Detector Reset
This bit is set if a BODCORE Reset has occurred.

Bit 0 – POR Power On Reset
This bit is set if a POR has occurred.

19. Peripheral Access Controller (PAC)

19.1 Overview

The Peripheral Access Controller (PAC) provides an interface for the locking and unlocking of peripheral registers within the device. It reports all violations that could happen when accessing a peripheral: write protected access, illegal access, enable protected access, access when clock synchronization or software reset is on-going. These errors are reported in a unique interrupt flag for a peripheral. The PAC module also reports errors occurring at the slave bus level, when an access to a non-existing address is detected.

19.2 Features

- Manages write protection access and reports access errors for the peripheral modules or bridges.

19.3 Block Diagram

Figure 19-1. PAC Block Diagram

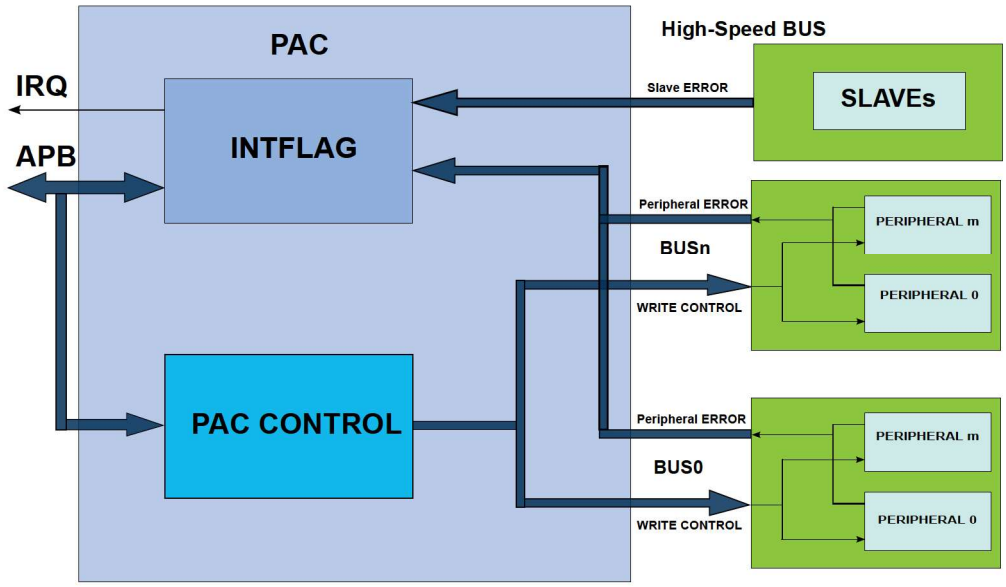

19.4 Peripheral Dependencies

Peripheral	Base Address	IRQ	AHB CLK	APB CLK	Generic CLK	PAC		Events		DMA	Sleep Walking
			Enabled at reset	Enabled at reset	Index	Index	Prot at reset	User	Generator	Index	
PAC	0x40000000	0	Y	Y	-	0	N	-	81: ACCERR	-	-

19.5 Functional Description

19.5.1 Principle of Operation

The Peripheral Access Control module allows the user to set a write protection on peripheral modules and generate an interrupt in case of a peripheral access violation. The peripheral's protection can be set, cleared or locked at the

user discretion. A set of Interrupt Flag and Status registers informs the user on the status of the violation in the peripherals. In addition, slave bus errors can be also reported in the cases where reserved area is accessed by the application.

19.5.2 Basic Operation

19.5.2.1 Initialization, Enabling and Resetting

The PAC is always enabled after reset.

Only a hardware reset will reset the PAC module.

19.5.2.2 Operations

The PAC module allows the user to set, clear or lock the write protection status of all peripherals on all Peripheral Bridges.

If a peripheral register violation occurs, the Peripheral Interrupt Flag n registers (INTFLAGn) are updated to inform the user on the status of the violation in the peripherals connected to the Peripheral Bridge n (n = A,B,C ...). The corresponding Peripheral Write Control Status n register (STATUSn) gives the state of the write protection for all peripherals connected to the corresponding Peripheral Bridge n. Refer to 19.5.2.3 Peripheral Access Errors for details.

The PAC module also reports the errors occurring at slave bus level when an access to reserved area is detected. AHB Slave Bus Interrupt Flag register (INTFLAGAHB) informs the user on the status of the violation in the corresponding slave. Refer to the 19.5.2.6 AHB Slave Bus Errors for details.

19.5.2.3 Peripheral Access Errors

The following events will generate a Peripheral Access Error:

- Protected write: To avoid unexpected writes to a peripheral's registers, each peripheral can be write protected. Only the registers denoted as “PAC Write-Protection” in the module’s data sheet can be protected. If a peripheral is not write protected, write data accesses are performed normally. If a peripheral is write protected and if a write access is attempted, data will not be written and peripheral returns an access error. The corresponding interrupt flag bit in the INTFLAGn register will be set.
- Illegal access: Access to an unimplemented register within the module.
- Synchronized write error: For write-synchronized registers an error will be reported if the register is written while a synchronization is ongoing.

When any of the INTFLAGn registers bit are set, an interrupt will be requested if the PAC interrupt enable bit is set.

19.5.2.4 Write Access Protection Management

Peripheral access control can be enabled or disabled by writing to the WRCTRL register.

The data written to the WRCTRL register is composed of two fields; WRCTRL.PERID and WRCTRL.KEY. The WRCTRL.PERID is an unique identifier corresponding to a peripheral. The WRCTRL.KEY is a key value that defines the operation to be done on the control access bit. These operations can be “clear protection”, “set protection” and “set and lock protection bit”.

The “clear protection” operation will remove the write access protection for the peripheral selected by WRCTRL.PERID. Write accesses are allowed for the registers in this peripheral.

The “set protection” operation will set the write access protection for the peripheral selected by WRCTRL.PERID. Write accesses are not allowed for the registers with write protection property in this peripheral.

The “set and lock protection” operation will set the write access protection for the peripheral selected by WRCTRL.PERID and locks the access rights of the selected peripheral registers. The write access protection will only be cleared by a hardware reset.

The peripheral access control status can be read from the corresponding STATUSn register.

19.5.2.5 Write Access Protection Management Errors

Only word-wise writes to the WRCTRL register will effectively change the access protection. Other type of accesses will have no effect and will cause a PAC write access error. This error is reported in the INTFLAGA.PAC bit.

PAC also offers an additional safety feature for correct program execution with an interrupt generated on double write clear protection or double write set protection. If a peripheral is write protected and a subsequent set protection operation is detected then the PAC returns an error, and similarly for a double clear protection operation.

In addition, an error is generated when writing a “set and lock” protection to a write-protected peripheral or when a write access is done to a locked set protection. This can be used to ensure that the application follows the intended program flow by always following a write protect with an unprotect and conversely. However in applications where a write protected peripheral is used in several contexts, e.g. interrupt, care should be taken so that either the interrupt can not happen while the main application or other interrupt levels manipulates the write protection status or when the interrupt handler needs to unprotect the peripheral based on the current protection status by reading the STATUS register.

The errors generated while accessing the PAC module registers (for example, key error, double protect error, and so on) will set the INTFLAGA.PAC flag.

19.5.2.6 AHB Slave Bus Errors

The PAC module reports errors occurring at the AHB Slave bus level. These errors are generated when an access is performed at an address where no slave (bridge or peripheral) is mapped. These errors are reported in the corresponding bits of the INTFLAGAHB register.

19.5.2.7 Generating Events

The PAC module can also generate an event when any of the Interrupt Flag registers bit are set. To enable the PAC event generation, the control bit EVCTRL.ERREO must be set a '1'.

19.5.3 Interrupts

The PAC has the following interrupt source:

- Error (ERR): Indicates that a peripheral access violation occurred in one of the peripherals controlled by the PAC module, or a bridge error occurred in one of the bridges reported by the PAC
  - This interrupt is a synchronous wake-up source.

Each interrupt source has an interrupt flag associated with it. The interrupt flag in the Interrupt Flag Status and Clear (INTFLAGAHB and INTFLAGn) registers is set when the interrupt condition occurs.

An interrupt request is generated when the interrupt flag is set and the corresponding interrupt is enabled. The interrupt request remains active until the interrupt flag is cleared, the interrupt is disabled, or the PAC is reset. All interrupt requests from the peripheral are ORed together on system level to generate one combined interrupt request to the NVIC 9.2 Nested Vector Interrupt Controller. The user must read the INTFLAGAHB and INTFLAGn registers to determine which interrupt condition is present. Interrupts must be globally enabled for interrupt requests to be generated.

19.5.4 Events

The PAC can generate the following output event:

- Error (ERR): Generated when one of the interrupt flag registers bits is set

Writing a '1' to an Event Output bit in the Event Control Register (EVCTRL.ERREO) enables the corresponding output event. Writing a '0' to this bit disables the corresponding output event.

19.5.5 Sleep Mode Operation

In Sleep mode, the PAC is kept enabled if an available bus master (CPU, DMA) is running. The PAC will continue to catch access errors from the module and generate interrupts or events.

19.6 Register Summary

Offset	Name	Bit Pos.	7	6	5	4	3	2	1	0
0x00	WRCTRL	7:0	PERID[7:0]							
		15:8	PERID[15:8]							
		23:16	KEY[7:0]							
		31:24								
0x04	EVCTRL	7:0								ERREO
0x05 ... 0x07	Reserved									
0x08	INTENCLR	7:0								ERR
0x09	INTENSET	7:0								ERR
0x0A ... 0x0F	Reserved									
0x10	INTFLAGAHB	7:0	DIVAS	SRAMDMAC	APBC	APBA	APBB	HSRAMDSU	HSRAMCM0P	FLASH
		15:8								
		23:16								
		31:24								
0x14	INTFLAGA	7:0	GCLK	SUPC	OSC32KCTRL	OSCCTRL	RSTC	MCLK	PM	PAC
		15:8					FREQM	EIC	RTC	WDT
		23:16								
		31:24								
0x18	INTFLAGB	7:0			HMATRIXHS	MTB	DMAC	NVMCTRL	DSU	PORT
		15:8								
		23:16								
		31:24								
0x1C	INTFLAGC	7:0				SERCOM3	SERCOM2	SERCOM1	SERCOM0	EVSYS
		15:8	TC3	TC2	TC1	TC0	TCC2	TCC1	TCC0	
		23:16	CCL		DAC	AC	SDADC	ADC1	ADC0	TC4
		31:24						PDEC		
0x20 ... 0x33	Reserved									
0x34	STATUSA	7:0	GCLK	SUPC	OSC32KCTRL	OSCCTRL	RSTC	MCLK	PM	PAC
		15:8					FREQM	EIC	RTC	WDT
		23:16								
		31:24								
0x38	STATUSB	7:0			HMATRIXHS	MTB	DMAC	NVMCTRL	DSU	PORT
		15:8								
		23:16								
		31:24								
0x3C	STATUSC	7:0				SERCOM3	SERCOM2	SERCOM1	SERCOM0	EVSYS
		15:8	TC3	TC2	TC1	TC0	TCC2	TCC1	TCC0	
		23:16	CCL		DAC	AC	SDADC	ADC1	ADC0	TC4
		31:24						PDEC		

19.6.1 Write Control

Name: WRCTRL
Offset: 0x00
Reset: 0x00000000
Property: –

Bit	31	30	29	28	27	26	25	24
Access								
Reset								

Bit	23	22	21	20	19	18	17	16
	KEY[7:0]							
Access	RW	RW	RW	RW	RW	RW	RW	RW
Reset	0	0	0	0	0	0	0	0

Bit	15	14	13	12	11	10	9	8
	PERID[15:8]							
Access	RW	RW	RW	RW	RW	RW	RW	RW
Reset	0	0	0	0	0	0	0	0

Bit	7	6	5	4	3	2	1	0
	PERID[7:0]							
Access	RW	RW	RW	RW	RW	RW	RW	RW
Reset	0	0	0	0	0	0	0	0

Bits 23:16 – KEY[7:0] Peripheral Access Control Key
These bits define the peripheral access control key:

Value	Name	Description
0x0	OFF	No action
0x1	CLEAR	Clear the peripheral write control
0x2	SET	Set the peripheral write control
0x3	LOCK	Set and lock the peripheral write control until the next hardware reset

Bits 15:0 – PERID[15:0] Peripheral Identifier
The PERID represents the peripheral whose control is changed using the WRCTRL.KEY.

Table 19-1. Peripheral Identifier

Peripheral	Identifier
APBA Peripherals	
PAC	0
PM	1
MCLK	2
RSTC	3
OSCCTRL	4
OSC32KCTRL	5
SUPC	6
GCLK	7
WDT	8
RTC	9
EIC	10
FREQM (4)	11
TEMPS (1)	12
APBB Peripherals	

.....continued	
Peripheral	**Identifier**
PORT (2,3)	32
DSU	33
NVMCTRL	34
DMAC	35
MTB	36
HMATRIXHS	37
APBC Peripherals	
EVSYS	64
SERCOM0	65
SERCOM1	66
SERCOM2	67
SERCOM3	68
TCC0	73
TCC1	74
TCC2	75
TC0	76
TC1	77
TC2	78
TC3	79
TC4	80
ADC0	81
ADC1	82
SDADC	83
AC	84
DAC	85
CCL	87
PDEC	90

Notes:

1. PAC protection for the TSENS should only be used when the TSENS is in Free Run mode.
2. IOBUS writes are not prevented to PAC write-protected registers when the PORT module is PAC protected.
3. PORT read/write attempts on non-implemented registers, including addresses beyond the last implemented register group do not generate a PAC protection error.
4. Reading the Frequency Meter Control B register (FREQM.CTRLB) will result in a PAC error.

19.6.2 Event Control

Name: EVCTRL
Offset: 0x04
Reset: 0x00
Property: -

Bit	7	6	5	4	3	2	1	0
								ERREO
Access								RW
Reset								0

Bit 0 – ERREO Peripheral Access Error Event Output
This bit indicates if the Peripheral Access Error Event Output is enabled or disabled. When enabled, an event will be generated when one of the interrupt flag registers bits (INTFLAGAHB, INTFLAGn) is set:

Value	Description
0	Peripheral Access Error Event Output is disabled.
1	Peripheral Access Error Event Output is enabled.

19.6.3 Interrupt Enable Clear

Name: INTENCLR
Offset: 0x08
Reset: 0x00
Property: PAC Write-Protection

This register allows the user to disable an interrupt without doing a read-modify-write operation. Changes in this register will also be reflected in the Interrupt Enable Set register (INTENSET).

Bit	7	6	5	4	3	2	1	0
								ERR
Access								RW
Reset								0

Bit 0 – ERR Peripheral Access Error Interrupt Disable
This bit indicates that the Peripheral Access Error Interrupt is enabled and an interrupt request will be generated when one of the interrupt flag registers bits (INTFLAGAHB, INTFLAGn) is set:
Writing a '0' to this bit has no effect.
Writing a '1' to this bit will clear the Peripheral Access Error interrupt Enable bit and disables the corresponding interrupt request.

Value	Description
0	Peripheral Access Error interrupt is disabled.
1	Peripheral Access Error interrupt is enabled.

19.6.4 Interrupt Enable Set

Name: INTENSET
Offset: 0x09
Reset: 0x00
Property: PAC Write-Protection

This register allows the user to enable an interrupt without doing a read-modify-write operation. Changes in this register will also be reflected in the Interrupt Enable Set register (INTENCLR).

Bit	7	6	5	4	3	2	1	0
								ERR
Access								RW
Reset								0

Bit 0 – ERR Peripheral Access Error Interrupt Enable
This bit indicates that the Peripheral Access Error Interrupt is enabled and an interrupt request will be generated when one of the interrupt flag registers bits (INTFLAGAHB, INTFLAGn) is set:
Writing a '0' to this bit has no effect.
Writing a '1' to this bit will set the Peripheral Access Error interrupt Enable bit and enables the corresponding interrupt request.

Value	Description
0	Peripheral Access Error interrupt is disabled.
1	Peripheral Access Error interrupt is enabled.

19.6.5 AHB Slave Bus Interrupt Flag Status and Clear

Name: INTFLAGAHB
Offset: 0x10
Reset: 0x000000
Property: –

This flag is cleared by writing a '1' to the flag.

This flag is set when an access error is detected by the SLAVE n, and will generate an interrupt request if INTENCLR/SET.ERR is '1'.

Writing a '0' to this bit has no effect.

Writing a '1' to this bit will clear the corresponding INTFLAGAHB interrupt flag.

Bit	31	30	29	28	27	26	25	24
Access								
Reset								

Bit	23	22	21	20	19	18	17	16
Access								
Reset								

Bit	15	14	13	12	11	10	9	8
Access								
Reset								

Bit	7	6	5	4	3	2	1	0
	DIVAS	SRAMDMAC	APBC	APBA	APBB	HSRAMDSU	HSRAMCM0P	FLASH
Access	R/W	R/W	R/W	R/W	R/W	R/W	R/W	R/W
Reset	0	0	0	0	0	0	0	0

Bit 7 – DIVAS Interrupt Flag for SLAVE DIVAS

Bit 6 – SRAMDMAC Interrupt Flag for SLAVE SRAMDMAC

Bit 5 – APBC Interrupt Flag for SLAVE APBC

Bit 4 – APBA Interrupt Flag for SLAVE APBA

Bit 3 – APBB Interrupt Flag for SLAVE APBB

Bit 2 – HSRAMDSU Interrupt Flag for SLAVE SRAMDSU

Bit 1 – HSRAMCM0P Interrupt Flag for SLAVE SRAMCM0P

Bit 0 – FLASH Interrupt Flag for SLAVE FLASH

19.6.6 Peripheral Interrupt Flag Status and Clear A

Name: INTFLAGA
Offset: 0x14
Reset: 0x00000000
Property: –

This flag is cleared by writing a one to the flag.

This flag is set when a Peripheral Access Error occurs while accessing the peripheral associated with the respective INTFLAGA bit, and will generate an interrupt request if INTENCLR/SET.ERR is one.

Writing a zero to this bit has no effect.

Writing a one to this bit will clear the corresponding INTFLAGA interrupt flag.

Bit	31	30	29	28	27	26	25	24
Access								
Reset								

Bit	23	22	21	20	19	18	17	16
Access								
Reset								

Bit	15	14	13	12	11	10	9	8
					FREQM	EIC	RTC	WDT
Access					R/W	R/W	R/W	R/W
Reset					0	0	0	0

Bit	7	6	5	4	3	2	1	0
	GCLK	SUPC	OSC32KCTRL	OSCCTRL	RSTC	MCLK	PM	PAC
Access	R/W	R/W	R/W	R/W	R/W	R/W	R/W	R/W
Reset	0	0	0	0	0	0	0	0

Bit 11 – FREQM Interrupt Flag for FREQM

Bit 10 – EIC Interrupt Flag for EIC

Bit 9 – RTC Interrupt Flag for RTC

Bit 8 – WDT Interrupt Flag for WDT

Bit 7 – GCLK Interrupt Flag for GCLK

Bit 6 – SUPC Interrupt Flag for SUPC

Bit 5 – OSC32KCTRL Interrupt Flag for OSC32KCTRL

Bit 4 – OSCCTRL Interrupt Flag for OSCCTRL

Bit 3 – RSTC Interrupt Flag for RSTC

Bit 2 – MCLK Interrupt Flag for MCLK

Bit 1 – PM Interrupt Flag for PM

Bit 0 – PAC Interrupt Flag for PAC

19.6.7 Peripheral Interrupt Flag Status and Clear B

Name: INTFLAGB
Offset: 0x18
Reset: 0x00000000
Property: –

This flag is cleared by writing a '1' to the flag.

This flag is set when a Peripheral Access Error occurs while accessing the peripheral associated with the respective INTFLAGB bit, and will generate an interrupt request if INTENCLR/SET.ERR is '1'.

Writing a '0' to this bit has no effect.

Writing a '1' to this bit will clear the corresponding INTFLAGB interrupt flag.

Bit	31	30	29	28	27	26	25	24
Access								
Reset								

Bit	23	22	21	20	19	18	17	16
Access								
Reset								

Bit	15	14	13	12	11	10	9	8
Access								
Reset								

Bit	7	6	5	4	3	2	1	0
			HMATRIXHS	MTB	DMAC	NVMCTRL	DSU	PORT
Access			R/W	R/W	R/W	R/W	R/W	R/W
Reset			0	0	0	0	0	0

Bit 5 – HMATRIXHS Interrupt Flag for HMATRIXHS

Bit 4 – MTB Interrupt Flag for MTB

Bit 3 – DMAC Interrupt Flag for DMAC

Bit 2 – NVMCTRL Interrupt Flag for NVMCTRL

Bit 1 – DSU Interrupt Flag for DSU

Bit 0 – PORT Interrupt Flag for PORT

19.6.8 Peripheral Interrupt Flag Status and Clear C

Name: INTFLAGC
Offset: 0x1C
Reset: 0x00000000
Property: –

This flag is cleared by writing a one to the flag.

This flag is set when a Peripheral Access Error occurs while accessing the peripheral associated with the respective INTFLAGC bit, and will generate an interrupt request if INTENCLR/SET.ERR is one.

Writing a zero to this bit has no effect.

Writing a one to this bit will clear the corresponding INTFLAGC interrupt flag.

Bit	31	30	29	28	27	26	25	24
						PDEC		
Access						R/W		
Reset						0		

Bit	23	22	21	20	19	18	17	16
	CCL		DAC	AC	SDADC	ADC1	ADC0	TC4
Access	R/W		R/W	R/W	R/W	R/W	R/W	R/W
Reset	0		0	0	0	0	0	0

Bit	15	14	13	12	11	10	9	8
	TC3	TC2	TC1	TC0	TCC2	TCC1	TCC0	
Access	R/W	R/W	R/W	R/W	R/W	R/W	R/W	
Reset	0	0	0	0	0	0	0	

Bit	7	6	5	4	3	2	1	0
				SERCOM3	SERCOM2	SERCOM1	SERCOM0	EVSYS
Access				R/W	R/W	R/W	R/W	R/W
Reset				0	0	0	0	0

Bit 26 – PDEC Interrupt Flag for the PDEC

Bit 23 – CCL Interrupt Flag for CCL

Bit 21 – DAC Interrupt Flag for the DAC

Bit 20 – AC Interrupt Flag for the AC

Bit 19 – SDADC Interrupt Flag for the SDADC

Bits 17, 18 – ADC Interrupt Flag for ADCn [n=1..0]

Bits 12, 13, 14, 15, 16 – TC Interrupt Flag for TCn [n = 4..0]

Bits 9, 10, 11 – TCC Interrupt Flag for TCCn [n = 2..0]

Bits 1, 2, 3, 4 – SERCOM Interrupt Flag for SERCOMn [n = 3..0]

Bit 0 – EVSYS Interrupt Flag for EVSYS

19.6.9 Peripheral Write Protection Status A

Name: STATUSA
Offset: 0x34
Reset: 0x000000
Property: –

Writing to this register has no effect.

Reading STATUS register returns peripheral write protection status:

Value	Description
0	Peripheral is not write protected.
1	Peripheral is write protected.

Bit	31	30	29	28	27	26	25	24
Access								
Reset								

Bit	23	22	21	20	19	18	17	16
Access								
Reset								

Bit	15	14	13	12	11	10	9	8
					FREQM	EIC	RTC	WDT
Access					R	R	R	R
Reset					0	0	0	0

Bit	7	6	5	4	3	2	1	0
	GCLK	SUPC	OSC32KCTRL	OSCCTRL	RSTC	MCLK	PM	PAC
Access	R	R	R	R	R	R	R	R
Reset	0	0	0	0	0	0	0	0

Bit 11 – FREQM Peripheral FREQM Write Protection Status

Bit 10 – EIC Peripheral EIC Write Protection Status

Bit 9 – RTC Peripheral RTC Write Protection Status

Bit 8 – WDT Peripheral WDT Write Protection Status

Bit 7 – GCLK Peripheral GCLK Write Protection Status

Bit 6 – SUPC Peripheral SUPC Write Protection Status

Bit 5 – OSC32KCTRL Peripheral OSC32KCTRL Write Protection Status

Bit 4 – OSCCTRL Peripheral OSCCTRL Write Protection Status

Bit 3 – RSTC Peripheral RSTC Write Protection Status

Bit 2 – MCLK Peripheral MCLK Write Protection Status

Bit 1 – PM Peripheral PM Write Protection Status

Bit 0 – PAC Peripheral PAC Write Protection Status

19.6.10 Peripheral Write Protection Status B

Name: STATUSB
Offset: 0x38
Reset: 0x00000002
Property: –

Writing to this register has no effect.

Reading STATUS register returns peripheral write protection status:

Value	Description
0	Peripheral is not write protected.
1	Peripheral is write protected.

Bit	31	30	29	28	27	26	25	24
Access								
Reset								

Bit	23	22	21	20	19	18	17	16
Access								
Reset								

Bit	15	14	13	12	11	10	9	8
Access								
Reset								

Bit	7	6	5	4	3	2	1	0
			HMATRIXHS	MTB	DMAC	NVMCTRL	DSU	PORT
Access			R	R	R	R	R	R
Reset			0	0	0	0	1	0

Bit 5 – HMATRIXHS Peripheral HMATRIXHS Write Protection Status

Bit 4 – MTB Peripheral MTB Write Protection Status

Bit 3 – DMAC Peripheral DMAC Write Protection Status

Bit 2 – NVMCTRL Peripheral NVMCTRL Write Protection Status

Bit 1 – DSU Peripheral DSU Write Protection Status

Bit 0 – PORT Peripheral PORT Write Protection Status

19.6.11 Peripheral Write Protection Status C

Name: STATUSC
Offset: 0x3C
Reset: 0x09000000
Property: –

Writing to this register has no effect.

Reading STATUS register returns peripheral write protection status:

Value	Description
0	Peripheral is not write protected.
1	Peripheral is write protected.

Bit	31	30	29	28	27	26	25	24
						PDEC		
Access						R		
Reset						0		

Bit	23	22	21	20	19	18	17	16
	CCL		DAC	AC	SDADC	ADC1	ADC0	TC4
Access	R		R	R	R	R	R	R
Reset	0		0	0	0	0	0	0

Bit	15	14	13	12	11	10	9	8
	TC3	TC2	TC1	TC0	TCC2	TCC1	TCC0	
Access	R	R	R	R	R	R	R	
Reset	0	0	0	0	0	0	0	

Bit	7	6	5	4	3	2	1	0
				SERCOM3	SERCOM2	SERCOM1	SERCOM0	EVSYS
Access				R	R	R	R	R
Reset				0	0	0	0	0

Bit 26 – PDEC Peripheral PDEC Write Protection Status

Bit 23 – CCL Peripheral CCL Write Protection Status

Bit 21 – DAC Peripheral DAC Write Protection Status

Bit 20 – AC Peripheral AC Write Protection Status

Bit 19 – SDADC Peripheral SDADC Write Protection Status

Bits 17, 18 – ADC Peripheral ADCn [n=1..0] Write Protection Status

Bits 12, 13, 14, 15, 16 – TC Peripheral TCn Write Protection Status [n = 4..0]

Bits 9, 10, 11 – TCC Peripheral TCCn [n = 2..0] Write Protection Status TCCn [n = 2..0]

Bits 1, 2, 3, 4 – SERCOM Peripheral SERCOMn Write Protection Status [n = 3..0]

Bit 0 – EVSYS Peripheral EVSYS Write Protection Status

20. Device Service Unit (DSU)

20.1 Overview

The Device Service Unit (DSU) provides a means of detecting debugger probes. It enables the Arm Debug Access Port (DAP) to have control over multiplexed debug pads and CPU reset. The DSU also provides system-level services to debug adapters in an Arm debug system. It implements a CoreSight™ Debug ROM that provides device identification as well as identification of other debug components within the system. Hence, it complies with the Arm Peripheral Identification specification. The DSU also provides system services to applications that need memory testing, as required for IEC60730 Class B compliance, for example. The DSU can be accessed simultaneously by a debugger and the CPU, as it is connected on the High-Speed Bus Matrix. For security reasons, some of the DSU features will be limited or unavailable when the device is protected by the NVMCTRL security bit.

20.2 Features

- CPU reset extension
- Debugger probe detection (Cold-Plugging and Hot-Plugging)
- Chip-Erase command and status
- 32-bit cyclic redundancy check (CRC32) of any memory accessible through the bus matrix
- Arm® CoreSight™ compliant device identification
- Two debug communications channels
- Debug access port security filter
- DMA connection
- Onboard memory built-in self-test (MBIST)

20.3 Block Diagram

Figure 20-1. DSU Block Diagram

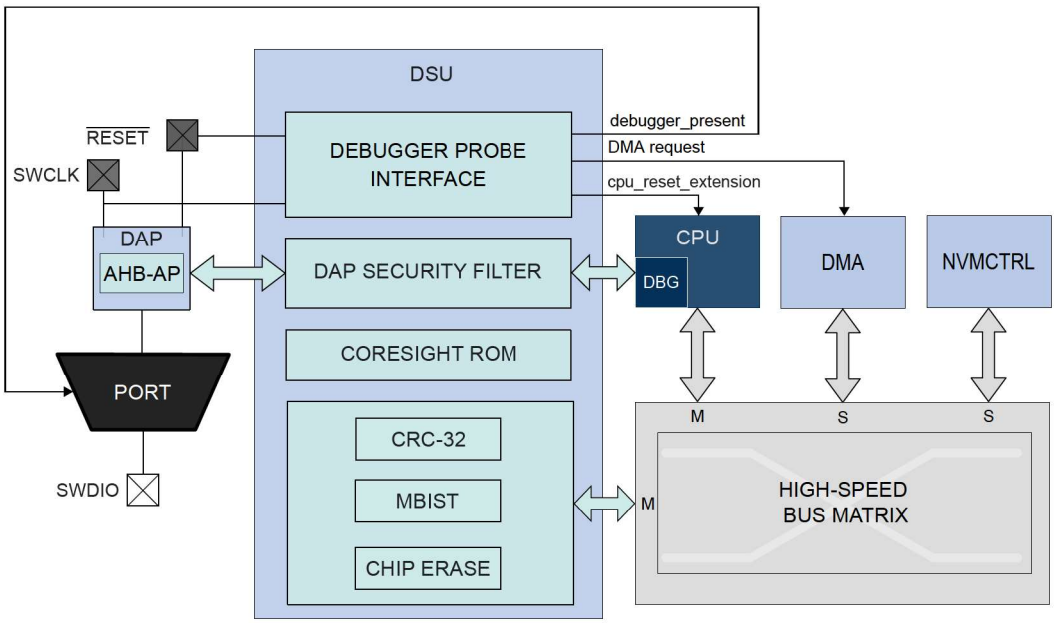

20.4 Signal Description

The DSU uses the following three signals to function.

Signal Name	Type	Description
$\overline{\text{RESET}}$	Digital Input	External reset pin
SWCLK	Digital Input	SW clock pin
SWDIO	Digital I/O	SW bidirectional data pin

20.5 Peripheral Dependencies

Peripheral	Base Address	IRQ	AHB CLK	APB CLK	Generic CLK	PAC		Events		DMA	Sleep Walking
			Enabled at reset	Enabled at reset	Index	Index	Prot at reset	User	Generator	Index	
DSU	0x41002000	-	Y	Y	-	1	Y	-	-	-	-

20.6 Debug Operation

20.6.1 Principle of Operation

The DSU provides basic services to allow on-chip debug using the Arm Debug Access Port and the Arm processor debug resources:

- CPU reset extension
- Debugger probe detection

For more details on the Arm debug components, refer to the “Arm Debug Interface v5 Architecture Specification”.

20.6.2 CPU Reset Extension

“CPU reset extension” refers to the extension of the reset phase of the CPU core after the external reset is released. This ensures that the CPU is not executing code at startup while a debugger connects to the system. The debugger is detected on a $\overline{\text{RESET}}$ release event when SWCLK is low. At startup, SWCLK is internally pulled up to avoid false detection of a debugger if the SWCLK pin is left unconnected. When the CPU is held in the reset extension phase, the CPU Reset Extension bit of the Status A register (STATUSA.CRSTEXT) is set. To release the CPU, write a '1' to STATUSA.CRSTEXT. STATUSA.CRSTEXT will then be set to '0'. Writing a '0' to STATUSA.CRSTEXT has no effect. For security reasons, it is not possible to release the CPU reset extension when the device is protected by the NVMCTRL security bit. Trying to do so sets the Protection Error bit (PERR) of the Status A register (STATUSA.PERR).

Figure 20-2. Typical CPU Reset Extension Set and Clear Timing Diagram

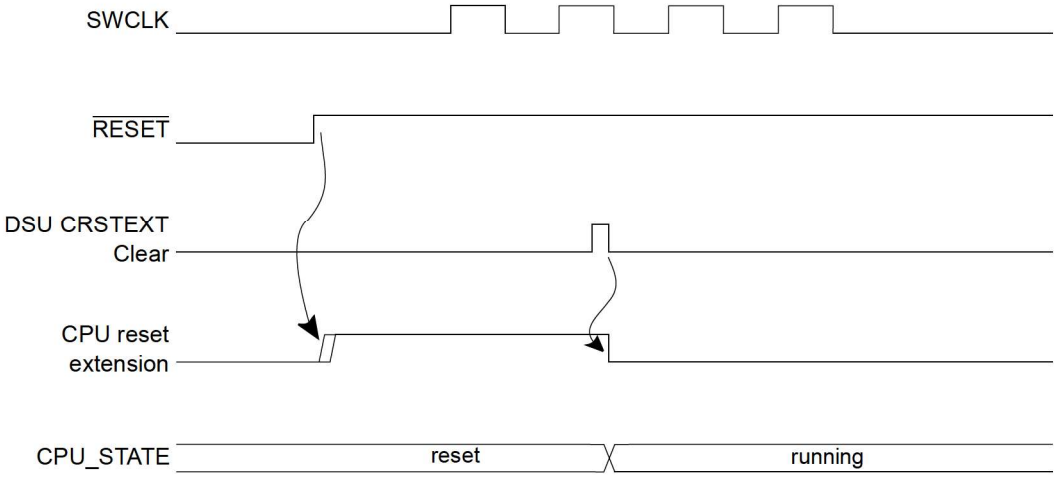

20.6.3 Debugger Probe Detection

20.6.3.1 Cold Plugging

Cold-Plugging is the detection of a debugger when the system is in reset. When Cold Plugging is detected the CPU reset extension is requested, as described above.

20.6.3.2 Hot Plugging

Hot Plugging is the detection of a debugger probe when the system is not in reset. Hot Plugging is not possible under reset because the detector is reset when POR or $\overline{\text{RESET}}$ are asserted. Hot Plugging is active when a SWCLK falling edge is detected. The SWCLK pad is multiplexed with other functions and the user must ensure that its default function is assigned to the debug system. If the SWCLK function is changed, the Hot Plugging feature is disabled until a power-reset or external reset occurs. Availability of the Hot Plugging feature can be read from the Hot Plugging Enable bit of the Status B register (STATUSB.HPE).

Figure 20-3. Hot-Plugging Detection Timing Diagram



The presence of a debugger probe is detected when either Hot Plugging or Cold Plugging is detected. Once detected, the Debugger Present bit of the Status B register (STATUSB.DBGPRES) is set. For security reasons, Hot-Plugging is not available when the device is protected by the NVMCTRL security bit.

This detection requires that pads are correctly powered. Thus, at cold startup, this detection cannot be done until POR is released. If the device is protected, Cold Plugging is the only way to detect a debugger probe, and so the external reset timing must be longer than the POR timing. If external reset is deasserted before POR release, the user must retry the procedure above until it gets connected to the device.

20.7 Chip Erase

Chip Erase consists of removing all sensitive information stored in the chip and clearing the NVMCTRL security bit. Therefore, all volatile memories and the Flash memory Main array and Data Flash section will be erased. The Flash auxiliary rows, including the user row, will not be erased.

Chip Erase is only possible as long as the Set Chip Erase Hard Lock (SCEHL) command has not been issued in the NVMCTRL.

⚠WARNING Once the SCEHL command has been issued, STATUS2:CEHL will be set and it becomes **permanently impossible** to perform a Chip-Erase.

When the device is protected, the debugger must first reset the device in order to be detected. This ensures that internal registers are reset after the protected state is removed. The Chip Erase operation is triggered by writing a '1' to the Chip Erase bit in the Control register (CTRL.CE). This command will be discarded if the DSU is protected by the Peripheral Access Controller (PAC). Once issued, the module clears volatile memories prior to erasing the Flash array. To ensure that the Chip Erase operation is completed, check the Done bit of the Status A register (STATUSA.DONE).

The Chip Erase operation depends on clocks and power management features that can be altered by the CPU. For that reason, it is recommended to issue a Chip Erase after a Cold Plugging procedure to ensure that the device is in a known and safe state.

The recommended sequence is as follows:

1. Issue the Cold Plugging procedure (refer to 20.6.3.1 Cold Plugging). The device then:
   1.1. Detects the debugger probe.
   1.2. Holds the CPU in reset.
2. Issue the Chip Erase command by writing a '1' to CTRL.CE. The device then:
   2.1. Clears the system volatile memories.
   2.2. Erases the whole Flash array (including the main array and Data Flash section, not including auxiliary rows).
   2.3. Clears the NVMCTRL security bit protection.
3. Check for completion by polling STATUSA.DONE (read as '1' when completed).
4. Reset the device to let the NVMCTRL update the fuses.

20.8 Programming

Programming the Flash or SRAM memories is only possible when the device is not protected by the NVMCTRL security bit. The programming procedure is as follows:

1. At power up, $\overline{\text{RESET}}$ is driven low by a debugger. The on-chip regulator holds the system in a POR state until the input supply is above the POR threshold (refer to Power-on Reset (POR) characteristics). The system continues to be held in this static state until the internally regulated supplies have reached a safe operating state.
2. The PM starts, clocks are switched to the slow clock (Core Clock, System Clock, Flash Clock and any Bus Clocks that do not have clock gate control). Internal resets are maintained due to the external reset.
3. The debugger maintains a low level on SWCLK. $\overline{\text{RESET}}$ is released, resulting in a debugger Cold-Plugging procedure.
4. The debugger generates a clock signal on the SWCLK pin, the Debug Access Port (DAP) receives a clock.
5. The CPU remains in Reset due to the Cold-Plugging procedure; meanwhile, the rest of the system is released.
6. A Chip-Erase is issued to ensure that the Flash is fully erased prior to programming.
7. Programming is available through the AHB-AP.
8. After the operation is completed, the chip can be restarted either by asserting $\overline{\text{RESET}}$ or toggling power. Make sure that the SWCLK pin is high when releasing $\overline{\text{RESET}}$ to prevent extending the CPU reset.

20.9 Intellectual Property Protection

Intellectual property protection consists of restricting access to internal memories from external tools when the device is protected, and this is accomplished by setting the NVMCTRL security bit. This protected state can be removed by issuing a Chip-Erase (refer to Chip Erase), as long as the Set Chip Erase Hard Lock (SCEHL) command has not been issued in the NVMCTRL. Once the SCEHL command has been issued, STATUS2:CEHL will be set and it becomes permanently impossible to perform a Chip-Erase, and therefore permanently impossible to remove the protected state. When the device is protected, read/write accesses using the AHB-AP are limited to the DSU address range and DSU commands are restricted. When issuing a Chip-Erase, sensitive information is erased from volatile memory and Flash.

The DSU implements a security filter that monitors the AHB transactions inside the DAP. If the device is protected, then AHB-AP read/write accesses outside the DSU external address range are discarded, causing an error response that sets the Arm AHB-AP sticky error bits (refer to the Arm Debug Interface v5 Architecture Specification on www.arm.com).

The DSU can be accessed using any one of these options:

- Internally from the CPU, without any limitation, even when the device is protected
- Externally from a debug adapter, with some restrictions when the device is protected

For security reasons, DSU features have limitations when used from a debug adapter. To differentiate external accesses from internal ones, the first 0x100 bytes of the DSU register map has been mirrored at offset 0x100:

- The first 0x100 bytes form the internal address range
- The next 0x100 bytes form the external address range

When the device is protected, the DAP can only issue MEM-AP accesses in the DSU range 0x0100-0x1FFF.

The DSU operating registers are located in the 0x0000-0x00FF area and remapped in 0x0100-0x01FF to differentiate accesses coming from a debugger and the CPU. If the device is protected and an access is issued in the region 0x0100-0x01FF, it is subject to security restrictions. For more information, refer to the Table 20-1.

Figure 20-4. APB Memory Mapping

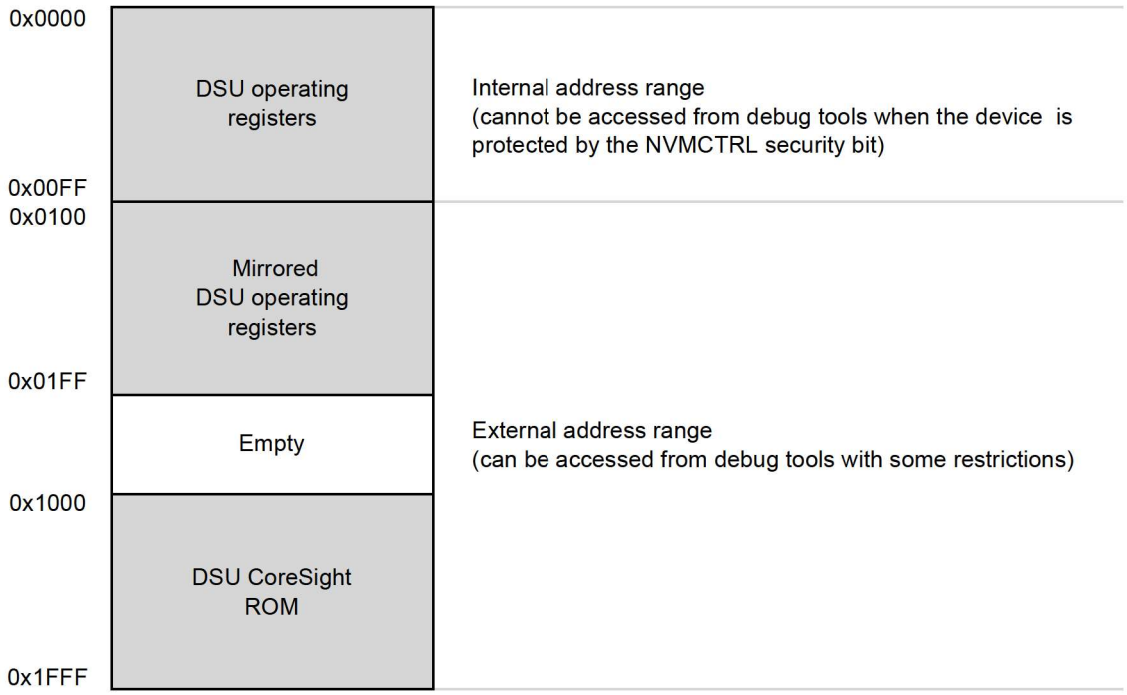

Some features not activated by APB transactions are not available when the device is protected:

Table 20-1. Feature Availability Under Protection

Features	Availability when the device is protected
CPU Reset Extension	Yes
Clear CPU Reset Extension	No
Debugger Cold-Plugging	Yes
Debugger Hot-Plugging	No

20.10 Device Identification

Device identification relies on the Arm CoreSight component identification scheme, which allows the chip to be identified as a PIC32C device implementing a DSU. The DSU contains identification registers to differentiate the device.

20.10.1 CoreSight Identification

A system-level Arm CoreSight ROM table is present in the device to identify the vendor and the chip identification method. Its address is provided in the MEM-AP BASE register inside the Arm Debug Access Port. The CoreSight ROM implements a 64-bit conceptual ID composed as follows from the PID0 to PID7 CoreSight ROM Table registers:

Figure 20-5. Conceptual 64-bit Peripheral ID

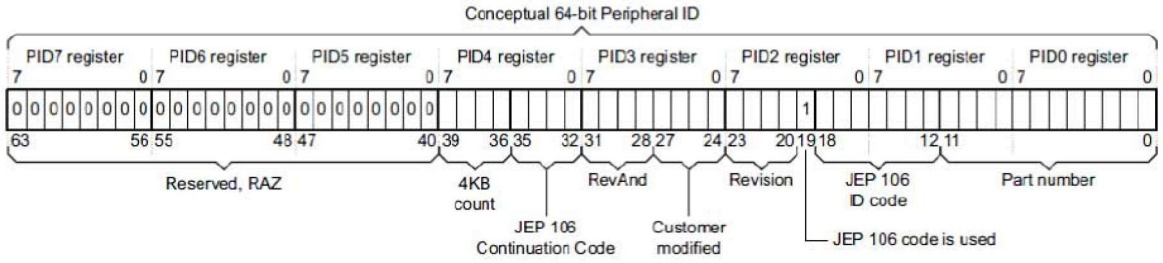

Table 20-2. Conceptual 64-Bit Peripheral ID Bit Descriptions

Field	Size	Description	Location
JEP-106 CC code	4	Continuation code: 0x0	PID4
JEP-106 ID code	7	Device ID: 0x1F	PID1+PID2
4KB count	4	Indicates that the CoreSight component is a ROM: 0x0	PID4
RevAnd	4	Not used; read as 0	PID3
CUSMOD	4	Not used; read as 0	PID3
PARTNUM	12	Contains 0xCD0 to indicate that DSU is present	PID0+PID1
REVISION	4	DSU revision (starts at 0x0 and increments by 1 at both major and minor revisions). Identifies DSU identification method variants. If 0x0, this indicates that device identification can be completed by reading the Device Identification register (DID)	PID2

For more information, refer to the Arm Debug Interface Version 5 Architecture Specification.

20.10.2 Chip Identification Method

The DSU DID register identifies the device by implementing the following information:

- Processor identification

- Product family identification
- Product series identification
- Device select

20.11 Functional Description

20.11.1 Principle of Operation

The DSU provides a CRC32 or MBIST memory service. The Address, Length and Data registers (ADDR, LENGTH, DATA) must be configured first; then a command can be issued by writing the Control register. When a command is ongoing, other commands are discarded until the current operation is completed. Therefore, the user must wait for the STATUSA.DONE bit to be set prior to issuing another one.

20.11.2 Basic Operation

20.11.2.1 Initialization

The module is enabled by enabling its clocks. The DSU registers can be PAC write-protected.

20.11.2.2 Operation From a Debug Adapter

Debug adapters should access the DSU registers in the external address range 0x100 – 0x1FFF. If the device is protected by the NVMCTRL 26.5.6 Security Bit and Chip Erase Hard Lock Bit, accessing the first 0x100 bytes causes the system to return an error. Refer to 20.9 Intellectual Property Protection.

20.11.2.3 Operation From the CPU

There are no restrictions when accessing DSU registers from the CPU. However, the user should access DSU registers in the internal address range (0x0 – 0x100) to avoid external security restrictions. Refer to 20.9 Intellectual Property Protection.

20.11.3 32-bit Cyclic Redundancy Check CRC32

The DSU unit provides support for calculating a cyclic redundancy check (CRC32) value for a memory area (including Flash and SRAM).

When the CRC32 command is issued from:

- The internal range, the CRC32 can be operated at any memory location
- The external range, the CRC32 operation is restricted; DATA, ADDR, and LENGTH values are forced (see below)

Table 20-3. AMOD Bit Descriptions when Operating CRC32

AMOD[1:0]	Short name	External range restrictions
0	ARRAY	CRC32 is restricted to the full Flash array area (Data Flash section not included). DATA forced to 0xFFFFFFFF before calculation (no seed)
1	Data Flash	CRC32 of the whole Data Flash section. DATA forced to 0xFFFFFFFF before calculation (no seed)
2-3	Reserved	

The algorithm employed is the industry standard CRC32 algorithm using the generator polynomial 0xEDB88320 (reversed representation).

20.11.3.1 Starting CRC32 Calculation

CRC32 calculation for a memory range is started after writing the start address into the Address register (ADDR) and the size of the memory range into the Length register (LENGTH). Both must be word-aligned.

The initial value used for the CRC32 calculation must be written to the Data register (DATA). This value will usually be 0xFFFFFFFF, but can be, for example, the result of a previous CRC32 calculation if generating a common CRC32 of separate memory blocks.

Once completed, the calculated CRC32 value can be read out of the Data register. The read value must be complemented to match standard CRC32 implementations or kept non-inverted if used as starting point for subsequent CRC32 calculations.

The actual test is started by writing a '1' in the 32-bit Cyclic Redundancy Check bit of the Control register (CTRL.CRC). A running CRC32 operation can be canceled by resetting the module (writing '1' to CTRL.SWRST).

20.11.3.2 Interpreting the Results

The user should monitor the Status A register. When the operation is completed, STATUSA.DONE is set. Then the Bus Error bit of the Status A register (STATUSA.BERR) must be read to ensure that no bus error occurred.

20.11.4 Debug Communication Channels

The Debug Communication Channels (DCCO and DCC1) consist of a pair of registers with associated handshake logic, accessible by both CPU and debugger even if the device is protected by the NVMCTRL security bit. The registers can be used to exchange data between the CPU and the debugger, during run time as well as in debug mode. This enables the user to build a custom debug protocol using only these registers.

The DCC0 and DCC1 registers are accessible when the protected state is active. When the device is protected, however, it is not possible to connect a debugger while the CPU is running (STATUSA.CRSTEXT is not writable and the CPU is held under Reset).

Two Debug Communication Channel status bits in the Status B registers (STATUS.DCCDx) indicate whether a new value has been written in DCC0 or DCC1. These bits, DCC0D and DCC1D, are located in the STATUSB registers. They are automatically set on write and cleared on read.

Note: The DCC0 and DCC1 registers are shared with the on-board memory testing logic (MBIST). Accordingly, DCC0 and DCC1 must not be used while performing MBIST operations.

20.11.5 Testing of On-Board Memories MBIST

The DSU implements a feature for automatic testing of memory, also known as MBIST (memory built-in self test). This is primarily intended for production test of on-board memories. MBIST cannot be operated from the external address range when the device is protected by the NVMCTRL security bit. If an MBIST command is issued when the device is protected, a protection error is reported in the Protection Error bit in the Status A register (STATUSA.PERR).

1. Algorithm
   The algorithm used for testing is a type of March algorithm called "March LR". This algorithm is able to detect a wide range of memory defects, while still keeping a linear run time. The algorithm is:
   1.1. Write entire memory to '0', in any order.
   1.2. Bit by bit read '0', write '1', in descending order.
   1.3. Bit by bit read '1', write '0', read '0', write '1', in ascending order.
   1.4. Bit by bit read '1', write '0', in ascending order.
   1.5. Bit by bit read '0', write '1', read '1', write '0', in ascending order.
   1.6. Read '0' from entire memory, in ascending order.

   The specific implementation used as a run time which depends on the CPU clock frequency and the number of bytes tested in the RAM. The detected faults are:
   - Address decoder faults
   - Stuck-at faults
   - Transition faults
   - Coupling faults
   - Linked Coupling faults
2. Starting MBIST
   To test a memory, you need to write the start address of the memory to the ADDR.ADDR bit field, and the size of the memory into the Length register.

   For best test coverage, an entire physical memory block should be tested at once. It is possible to test only a subset of a memory, but the test coverage will then be somewhat lower.

The actual test is started by writing a '1' to CTRL.MBIST. A running MBIST operation can be canceled by writing a '1' to CTRL.SWRST.

3. Interpreting the Results
The tester should monitor the STATUSA register. When the operation is completed, STATUSA.DONE is set. There are two different modes:
   - ADDR.AMOD=0: exit-on-error (default)
     In this mode, the algorithm terminates either when a fault is detected or on successful completion. In both cases, STATUSA.DONE is set. If an error was detected, STATUSA.FAIL will be set. User then can read the DATA and ADDR registers to locate the fault.
   - ADDR.AMOD=1: pause-on-error
     In this mode, the MBIST algorithm is paused when an error is detected. In such a situation, only STATUSA.FAIL is asserted. The state machine waits for user to clear STATUSA.FAIL by writing a '1' in STATUSA.FAIL to resume. Prior to resuming, user can read the DATA and ADDR registers to locate the fault.
4. Locating Faults
If the test stops with STATUSA.FAIL set, one or more bits failed the test. The test stops at the first detected error. The position of the failing bit can be found by reading the following registers:
   - ADDR: Address of the word containing the failing bit
   - DATA: contains data to identify which bit failed, and during which phase of the test it failed. The DATA register will in this case contains the following bit groups:

Figure 20-6. DATA bits Description When MBIST Operation Returns an Error

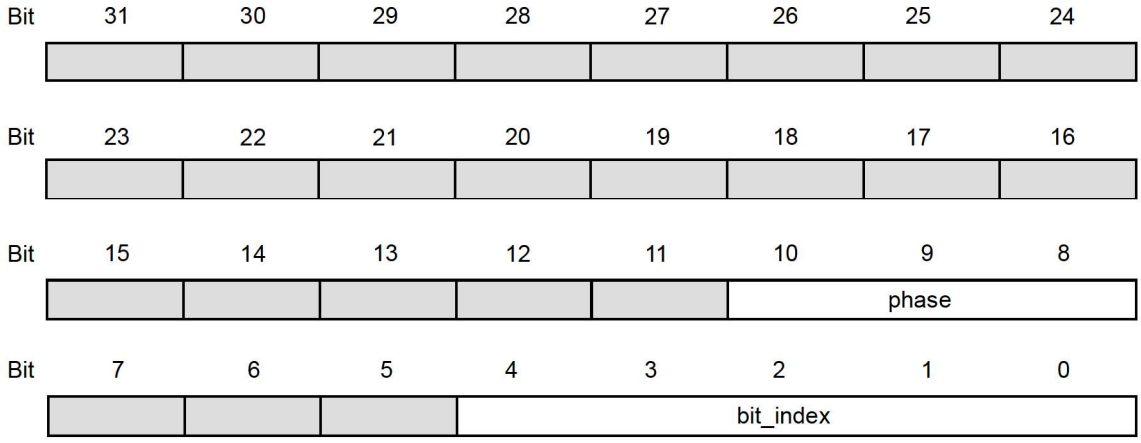

- bit_index: contains the bit number of the failing bit
- phase: indicates which phase of the test failed and the cause of the error, as listed in the following table.

Table 20-4. MBIST Operation Phases

Phase	Test actions
0	Write all bits to zero. This phase cannot fail.
1	Read '0', write '1', increment address
2	Read '1', write '0'
3	Read '0', write '1', decrement address
4	Read '1', write '0', decrement address
5	Read '0', write '1'
6	Read '1', write '0', decrement address
7	Read all zeros. bit_index is not used

Table 20-5. AMOD Bit Descriptions for MBIST

AMOD[1:0]	Description
0x0	Exit on Error
0x1	Pause on Error
0x2, 0x3	Reserved

20.11.6 System Services Availability when Accessed Externally and Device is Protected

External access: Access performed in the DSU address offset 0x100-0x1FFF range.

Internal access: Access performed in the DSU address offset 0x000-0x0FF range.

Table 20-6. Available Features when Operated From The External Address Range and Device is Protected

Features	Availability From The External Address Range and Device is Protected
Chip-Erase command and status	Yes
CRC32	Yes, only full array or full Data Flash section
CoreSight Compliant Device identification	Yes
Debug communication channels	Yes
STATUSA.CRSTEXT clearing	No (STATUSA.PERR is set when attempting to do so)
Testing of onboard memories (MBIST)	No

20.12 Register Summary

Offset	Name	Bit Pos.	7	6	5	4	3	2	1	0
0x00	CTRL	7:0	Reserved	Reserved		CE	MBIST	CRC		SWRST
0x01	STATUSA	7:0				PERR	FAIL	BERR	CRSTEXT	DONE
0x02	STATUSB	7:0			CEHL	HPE	DCCD1	DCCD0	DBGPRES	PROT
0x03	Reserved									
0x04	ADDR	7:0	ADDR[5:0]						AMOD[1:0]	
		15:8	ADDR[13:6]							
		23:16	ADDR[21:14]							
		31:24	ADDR[29:22]							
0x08	LENGTH	7:0	LENGTH[5:0]							
		15:8	LENGTH[13:6]							
		23:16	LENGTH[21:14]							
		31:24	LENGTH[29:22]							
0x0C	DATA	7:0	DATA[7:0]							
		15:8	DATA[15:8]							
		23:16	DATA[23:16]							
		31:24	DATA[31:24]							
0x10	DCC0	7:0	DATA[7:0]							
		15:8	DATA[15:8]							
		23:16	DATA[23:16]							
		31:24	DATA[31:24]							
0x14	DCC1	7:0	DATA[7:0]							
		15:8	DATA[15:8]							
		23:16	DATA[23:16]							
		31:24	DATA[31:24]							
0x18	DID	7:0	DEVSEL[7:0]							
		15:8	DIE[3:0]				REVISION[3:0]			
		23:16	FAMILY[0]		SERIES[5:0]					
		31:24	PROCESSOR[3:0]				FAMILY[4:1]			
0x1C ... 0x0FFF	Reserved									
0x1000	ENTRY0	7:0							FMT	EPRES
		15:8	ADDOFF[3:0]							
		23:16	ADDOFF[11:4]							
		31:24	ADDOFF[19:12]							
0x1004	ENTRY1	7:0							Reserved	Reserved
		15:8	Reserved[3:0]							
		23:16	Reserved[11:4]							
		31:24	Reserved[19:12]							
0x1008	END	7:0	END[7:0]							
		15:8	END[15:8]							
		23:16	END[23:16]							
		31:24	END[31:24]							
0x100C ... 0x1FCB	Reserved									
0x1FCC	MEMTYPE	7:0								SMEMP
		15:8								
		23:16								
		31:24								
0x1FD0	PID4	7:0	FKBC[3:0]				JEPCC[3:0]			
		15:8								
		23:16								
		31:24								

.....continued

Offset	Name	Bit Pos.	7	6	5	4	3	2	1	0
0x1FD4 ... 0x1FDF	Reserved									
0x1FE0	PID0	7:0	PARTNBL[7:0]							
		15:8								
		23:16								
		31:24								
0x1FE4	PID1	7:0	JEPIDCL[3:0]				PARTNBH[3:0]			
		15:8								
		23:16								
		31:24								
0x1FE8	PID2	7:0	REVISION[3:0]				JEPU	JEPIDCH[2:0]		
		15:8								
		23:16								
		31:24								
0x1FEC	PID3	7:0	REVAND[3:0]				CUSMOD[3:0]			
		15:8								
		23:16								
		31:24								
0x1FF0	CID0	7:0	PREAMBLEB0[7:0]							
		15:8								
		23:16								
		31:24								
0x1FF4	CID1	7:0	CCLASS[3:0]				PREAMBLE[3:0]			
		15:8								
		23:16								
		31:24								
0x1FF8	CID2	7:0	PREAMBLEB2[7:0]							
		15:8								
		23:16								
		31:24								
0x1FFC	CID3	7:0	PREAMBLEB3[7:0]							
		15:8								
		23:16								
		31:24								

20.12.1 Control

Name: CTRL
Offset: 0x0000
Reset: 0x00
Property: PAC Write-Protection

Bit	7	6	5	4	3	2	1	0
	Reserved	Reserved		CE	MBIST	CRC		SWRST
Access	-	-		W	W	W		W
Reset	0	0		0	0	0		0

Bit 7 – Reserved
Must be set to 0.

Bit 6 – Reserved
Must be set to 0.

Bit 4 – CE Chip-Erase
Writing a '0' to this bit has no effect.
Writing a '1' to this bit starts the Chip-Erase operation.
Note: The chip erase operation can only be performed if the Chip Erase Hard Lock has not been set (STATUS2:CEHL=0). Once STATUS2:CEHL=1, the chip erase feature becomes permanently disabled.

Bit 3 – MBIST Memory Built-In Self-Test
Writing a '0' to this bit has no effect.
Writing a '1' to this bit starts the memory BIST algorithm.

Bit 2 – CRC 32-bit Cyclic Redundancy Check
Writing a '0' to this bit has no effect.
Writing a '1' to this bit starts the cyclic redundancy check algorithm.

Bit 0 – SWRST Software Reset
Writing a '0' to this bit has no effect.
Writing a '1' to this bit resets the module.

20.12.2 Status A

Name: STATUSA
Offset: 0x0001
Reset: 0x00
Property: PAC Write-Protection

Bit	7	6	5	4	3	2	1	0
				PERR	FAIL	BERR	CRSTEXT	DONE
Access				R/W	R/W	R/W	R/W	R/W
Reset				0	0	0	0	0

Bit 4 – PERR Protection Error
Writing a '0' to this bit has no effect.
Writing a '1' to this bit clears the Protection Error bit.
This bit is set when a command that is not allowed in protected state is issued.

Bit 3 – FAIL Failure
Writing a '0' to this bit has no effect.
Writing a '1' to this bit clears the Failure bit.
This bit is set when a DSU operation failure is detected.

Bit 2 – BERR Bus Error
Writing a '0' to this bit has no effect.
Writing a '1' to this bit clears the Bus Error bit.
This bit is set when a bus error is detected.

Bit 1 – CRSTEXT CPU Reset Phase Extension
Writing a '0' to this bit has no effect.
Writing a '1' to this bit clears the CPU Reset Phase Extension bit.
This bit is set when a debug adapter Cold-Plugging is detected, which extends the CPU reset phase.

Bit 0 – DONE Done
Writing a '0' to this bit has no effect.
Writing a '1' to this bit clears the Done bit.
This bit is set when a DSU operation is completed.

20.12.3 Status B

Name: STATUSB
Offset: 0x0002
Reset: x determined by Security Bit (SB) and Chip Erase Hard Lock (CEHL) bit configuration before reset
Property: PAC Write-Protection

Bit	7	6	5	4	3	2	1	0
			CEHL	HPE	DCCD1	DCCD0	DBGPRES	PROT
Access			R	R	R	R	R	R
Reset			x	1	0	0	0	x

Bit 5 – CEHL Chip Erase Hard Lock status bit
Writing a '0' to this bit has no effect.
Writing a '1' to this bit has no effect.
Reading 1 means the debugger chip erase hard lock is permanently set. It is no more possible to perform a debugger chip erase.
Reading 0 means the debugger chip erase hard lock is not set and it is still possible to perform a debugger chip erase.

Bit 4 – HPE Hot-Plugging Enable
Writing a '0' to this bit has no effect.
Writing a '1' to this bit has no effect.
This bit is set when Hot-Plugging is enabled.
This bit is cleared when Hot-Plugging is disabled. This is the case when the SWCLK function is changed. Only a power-reset or a external reset can set it again.

Bits 2, 3 – DCCDx Debug Communication Channel x Dirty [x = 1..0]
Writing a '0' to this bit has no effect.
Writing a '1' to this bit has no effect.
This bit is set when DCCx is written.
This bit is cleared when DCCx is read.

Bit 1 – DBGPRES Debugger Present
Writing a '0' to this bit has no effect.
Writing a '1' to this bit has no effect.
This bit is set when a debugger probe is detected.
This bit is never cleared.

Bit 0 – PROT Protected
Writing a '0' to this bit has no effect.
Writing a '1' to this bit has no effect.
This bit is set at power-up when the device is protected (Meaning the Security Bit has been set).
This bit is never cleared.

20.12.4 Address

Name: ADDR
Offset: 0x0004
Reset: 0x00000000
Property: PAC Write-Protection

Bit	31	30	29	28	27	26	25	24
	ADDR[29:22]							
Access	R/W	R/W	R/W	R/W	R/W	R/W	R/W	R/W
Reset	0	0	0	0	0	0	0	0

Bit	23	22	21	20	19	18	17	16
	ADDR[21:14]							
Access	R/W	R/W	R/W	R/W	R/W	R/W	R/W	R/W
Reset	0	0	0	0	0	0	0	0

Bit	15	14	13	12	11	10	9	8
	ADDR[13:6]							
Access	R/W	R/W	R/W	R/W	R/W	R/W	R/W	R/W
Reset	0	0	0	0	0	0	0	0

Bit	7	6	5	4	3	2	1	0
	ADDR[5:0]						AMOD[1:0]	
Access	R/W	R/W	R/W	R/W	R/W	R/W	R/W	R/W
Reset	0	0	0	0	0	0	0	0

Bits 31:2 – ADDR[29:0] Address
Initial word start address needed for memory operations.

Bits 1:0 – AMOD[1:0] Access Mode
The functionality of these bits is dependent on the operation mode.
Bit description when operating CRC32: refer to 20.11.3 32-bit Cyclic Redundancy Check CRC32.
Bit description when testing onboard memories (MBIST): refer to Testing of On-Board Memories MBIST.

20.12.5 Length

Name: LENGTH
Offset: 0x0008
Reset: 0x00000000
Property: PAC Write-Protection

Bit	31	30	29	28	27	26	25	24
	LENGTH[29:22]							
Access	R/W	R/W	R/W	R/W	R/W	R/W	R/W	R/W
Reset	0	0	0	0	0	0	0	0

Bit	23	22	21	20	19	18	17	16
	LENGTH[21:14]							
Access	R/W	R/W	R/W	R/W	R/W	R/W	R/W	R/W
Reset	0	0	0	0	0	0	0	0

Bit	15	14	13	12	11	10	9	8
	LENGTH[13:6]							
Access	R/W	R/W	R/W	R/W	R/W	R/W	R/W	R/W
Reset	0	0	0	0	0	0	0	0

Bit	7	6	5	4	3	2	1	0
	LENGTH[5:0]							
Access	R/W	R/W	R/W	R/W	R/W	R/W		
Reset	0	0	0	0	0	0		

Bits 31:2 – LENGTH[29:0] Length
Length in words needed for memory operations.

20.12.6 Data

Name: DATA
Offset: 0x000C
Reset: 0x00000000
Property: PAC Write-Protection

Bit	31	30	29	28	27	26	25	24
	DATA[31:24]							
Access	R/W	R/W	R/W	R/W	R/W	R/W	R/W	R/W
Reset	0	0	0	0	0	0	0	0

Bit	23	22	21	20	19	18	17	16
	DATA[23:16]							
Access	R/W	R/W	R/W	R/W	R/W	R/W	R/W	R/W
Reset	0	0	0	0	0	0	0	0

Bit	15	14	13	12	11	10	9	8
	DATA[15:8]							
Access	R/W	R/W	R/W	R/W	R/W	R/W	R/W	R/W
Reset	0	0	0	0	0	0	0	0

Bit	7	6	5	4	3	2	1	0
	DATA[7:0]							
Access	R/W	R/W	R/W	R/W	R/W	R/W	R/W	R/W
Reset	0	0	0	0	0	0	0	0

Bits 31:0 – DATA[31:0] Data
Memory operation initial value or result value.

20.12.7 Debug Communication Channel 0

Name: DCC0
Offset: 0x0010
Reset: 0x00000000
Property: -

Bit	31	30	29	28	27	26	25	24
	DATA[31:24]							
Access	R/W	R/W	R/W	R/W	R/W	R/W	R/W	R/W
Reset	0	0	0	0	0	0	0	0

Bit	23	22	21	20	19	18	17	16
	DATA[23:16]							
Access	R/W	R/W	R/W	R/W	R/W	R/W	R/W	R/W
Reset	0	0	0	0	0	0	0	0

Bit	15	14	13	12	11	10	9	8
	DATA[15:8]							
Access	R/W	R/W	R/W	R/W	R/W	R/W	R/W	R/W
Reset	0	0	0	0	0	0	0	0

Bit	7	6	5	4	3	2	1	0
	DATA[7:0]							
Access	R/W	R/W	R/W	R/W	R/W	R/W	R/W	R/W
Reset	0	0	0	0	0	0	0	0

Bits 31:0 – DATA[31:0] Data
Data register. This register holds the last written data from either the DAP or the APB interface

20.12.8 Debug Communication Channel 1

Name: DCC1
Offset: 0x0014
Reset: 0x00000000
Property: -

Bit	31	30	29	28	27	26	25	24
	DATA[31:24]							
Access	R/W	R/W	R/W	R/W	R/W	R/W	R/W	R/W
Reset	0	0	0	0	0	0	0	0

Bit	23	22	21	20	19	18	17	16
	DATA[23:16]							
Access	R/W	R/W	R/W	R/W	R/W	R/W	R/W	R/W
Reset	0	0	0	0	0	0	0	0

Bit	15	14	13	12	11	10	9	8
	DATA[15:8]							
Access	R/W	R/W	R/W	R/W	R/W	R/W	R/W	R/W
Reset	0	0	0	0	0	0	0	0

Bit	7	6	5	4	3	2	1	0
	DATA[7:0]							
Access	R/W	R/W	R/W	R/W	R/W	R/W	R/W	R/W
Reset	0	0	0	0	0	0	0	0

Bits 31:0 – DATA[31:0] Data
Data register. This register holds the last written data from either the DAP or the APB interface

20.12.9 Device Identification

Name: DID
Offset: 0x0018
Property: -

The information in this register is related to the 2. Ordering Information.

Bit	31	30	29	28	27	26	25	24
	PROCESSOR[3:0]				FAMILY[4:1]			
Access	R	R	R	R	R	R	R	R
Reset	0	0	0	1	0	0	0	1

Bit	23	22	21	20	19	18	17	16
	FAMILY[0]		SERIES[5:0]					
Access	R		R	R	R	R	R	R
Reset	0		0	0	0	1	1	0

Bit	15	14	13	12	11	10	9	8
	DIE[3:0]				REVISION[3:0]			
Access	R	R	R	R	R	R	R	R
Reset	d	d	d	d	r	r	r	r

Bit	7	6	5	4	3	2	1	0
	DEVSEL[7:0]							
Access	R	R	R	R	R	R	R	R
Reset	x	x	x	x	x	x	x	x

Bits 31:28 – PROCESSOR[3:0] Processor
The value of this field defines the processor used on the device. For this device, the value of this field is 0x1, corresponding to a PIC32CM microcontroller embedding an ARM Cortex-M0+ processor.

Bits 27:23 – FAMILY[4:0] Product Family
The value of this field corresponds to the Product Family part of the Ordering Information. For this device, the value of this field is 0x2, corresponding to the PIC32CM Entry Level 5V tolerant Family.

Bits 21:16 – SERIES[5:0] Product Series
The Series field is a subset of the Family field. For this device, the value of this field is 0x07.

Bits 15:12 – DIE[3:0] Die Number
Identifies the mask within a family and series. For this device, the value of this field is 0x0.

Bits 11:8 – REVISION[3:0] Revision Number
Identifies the die revision number. 0x0 = rev.A1, 0x1 = rev.A2, and so on.

Bits 7:0 – DEVSEL[7:0] Device Selection
This bit field identifies a device within a product family and product series. The value corresponds to the Flash memory density, pin count and device variant parts of the ordering code.

Value	Description
0x00	128 KB Flash, 16 KB SRAM, 32-pin
0x01	64 KB Flash, 8 KB SRAM, 32-pin
0x02	Reserved
0x03-0x05	Reserved
0x06	128 KB Flash, 16 KB SRAM, 48-pin
0x07	64 KB Flash, 8 KB SRAM, 48-pin
0x08	Reserved

Value	Description
Other	Reserved

20.12.10 CoreSight ROM Table Entry 0

Name: ENTRY0
Offset: 0x1000
Reset: 0x9F0FC002
Property: -

Bit	31	30	29	28	27	26	25	24
	ADDOFF[19:12]							
Access	R	R	R	R	R	R	R	R
Reset	x	x	x	x	x	x	x	x

Bit	23	22	21	20	19	18	17	16
	ADDOFF[11:4]							
Access	R	R	R	R	R	R	R	R
Reset	x	x	x	x	x	x	x	x

Bit	15	14	13	12	11	10	9	8
	ADDOFF[3:0]							
Access	R	R	R	R				
Reset	x	x	x	x				

Bit	7	6	5	4	3	2	1	0
							FMT	EPRES
Access							R	R
Reset							1	x

Bits 31:12 – ADDOFF[19:0] Address Offset
The base address of the component, relative to the base address of this ROM table.

Bit 1 – FMT Format
Always reads as '1', indicating a 32-bit ROM table.

Bit 0 – EPRES Entry Present
This bit indicates whether an entry is present at this location in the ROM table.
This bit is set at power-up if the device is not protected indicating that the entry is present.
This bit is cleared at power-up if the device is protected indicating that the entry is not present.

20.12.11 CoreSight ROM Table Entry 1

Name: ENTRY1
Offset: 0x1004
Reset: 0xXXXXX00X
Property: -

Bit	31	30	29	28	27	26	25	24
	Reserved[19:12]							
Access	R	R	R	R	R	R	R	R
Reset	x	x	x	x	x	x	x	x

Bit	23	22	21	20	19	18	17	16
	Reserved[11:4]							
Access	R	R	R	R	R	R	R	R
Reset	x	x	x	x	x	x	x	x

Bit	15	14	13	12	11	10	9	8
	Reserved[3:0]							
Access	R	R	R	R				
Reset	x	x	x	x				

Bit	7	6	5	4	3	2	1	0
							Reserved	Reserved
Access							R	R
Reset							x	x

Bits 31:12 – Reserved[19:0]

Bit 1 – Reserved

Bit 0 – Reserved

20.12.12 CoreSight ROM Table End

Name: END
Offset: 0x1008
Reset: 0x00000000
Property: -

Bit	31	30	29	28	27	26	25	24
	END[31:24]							
Access	R	R	R	R	R	R	R	R
Reset	0	0	0	0	0	0	0	0

Bit	23	22	21	20	19	18	17	16
	END[23:16]							
Access	R	R	R	R	R	R	R	R
Reset	0	0	0	0	0	0	0	0

Bit	15	14	13	12	11	10	9	8
	END[15:8]							
Access	R	R	R	R	R	R	R	R
Reset	0	0	0	0	0	0	0	0

Bit	7	6	5	4	3	2	1	0
	END[7:0]							
Access	R	R	R	R	R	R	R	R
Reset	0	0	0	0	0	0	0	0

Bits 31:0 – END[31:0] End Marker
Indicates the end of the CoreSight ROM table entries.

20.12.13 CoreSight ROM Table Memory Type

Name: MEMTYPE
Offset: 0x1FCC
Reset: 0x0000000x
Property: -

Bit	31	30	29	28	27	26	25	24
Access								
Reset								

Bit	23	22	21	20	19	18	17	16
Access								
Reset								

Bit	15	14	13	12	11	10	9	8
Access								
Reset								

Bit	7	6	5	4	3	2	1	0
								SMEMP
Access								R
Reset								x

Bit 0 – SMEMP System Memory Present
This bit indicates whether system memory is present on the bus that connects to the ROM table.
This bit is set at power-up if the device is not protected, indicating that the system memory is accessible from a debug adapter.
This bit is cleared at power-up if the device is protected, indicating that the system memory is not accessible from a debug adapter.

20.12.14 Peripheral Identification 4

Name: PID4
Offset: 0x1FD0
Reset: 0x00000000
Property: -

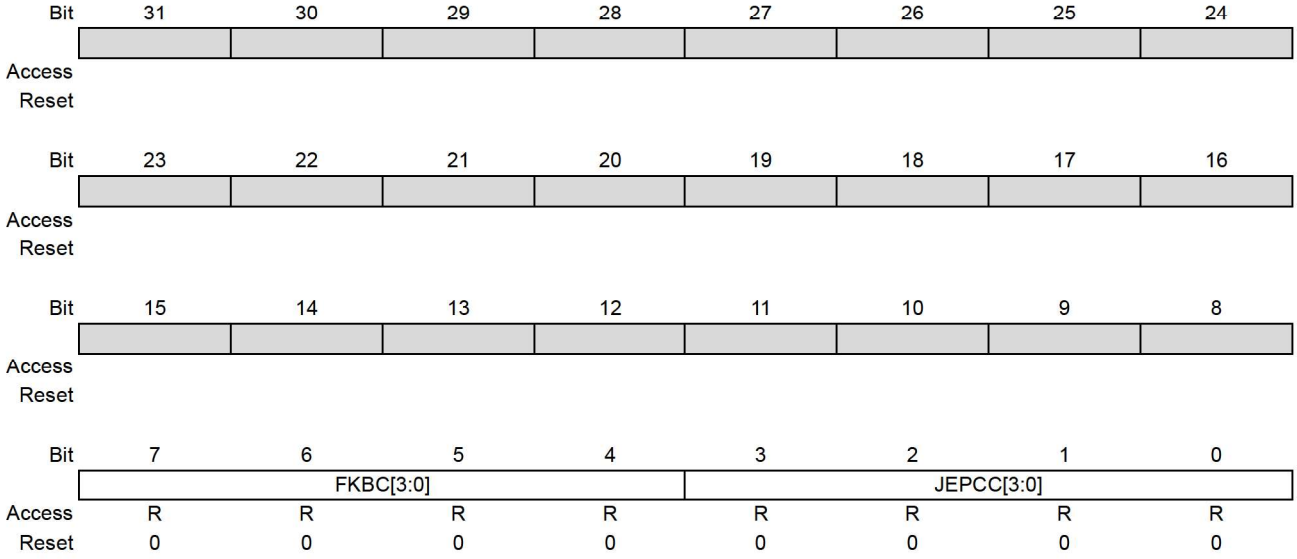

Bit	31	30	29	28	27	26	25	24
Access								
Reset								

Bit	23	22	21	20	19	18	17	16
Access								
Reset								

Bit	15	14	13	12	11	10	9	8
Access								
Reset								

Bit	7	6	5	4	3	2	1	0
	FKBC[3:0]				JEPCC[3:0]			
Access	R	R	R	R	R	R	R	R
Reset	0	0	0	0	0	0	0	0

Bits 7:4 – FKBC[3:0] 4KB Count
These bits will always return zero when read, indicating that this debug component occupies one 4KB block.

Bits 3:0 – JEPCC[3:0] JEP-106 Continuation Code
These bits will always return zero when read.

20.12.15 Peripheral Identification 0

Name: PID0
Offset: 0x1FE0
Reset: 0x000000D0
Property: -

Bit	31	30	29	28	27	26	25	24
Access								
Reset								

Bit	23	22	21	20	19	18	17	16
Access								
Reset								

Bit	15	14	13	12	11	10	9	8
Access								
Reset								

Bit	7	6	5	4	3	2	1	0
	PARTNBL[7:0]							
Access	R	R	R	R	R	R	R	R
Reset	1	1	0	1	0	0	0	0

Bits 7:0 – PARTNBL[7:0] Part Number Low
These bits will always return 0xD0 when read, indicating that this device implements a DSU module instance.

20.12.16 Peripheral Identification 1

Name: PID1
Offset: 0x1FE4
Reset: 0x000000FC
Property: -

Bit	31	30	29	28	27	26	25	24
Access								
Reset								

Bit	23	22	21	20	19	18	17	16
Access								
Reset								

Bit	15	14	13	12	11	10	9	8
Access								
Reset								

Bit	7	6	5	4	3	2	1	0
	JEPIDCL[3:0]				PARTNBH[3:0]			
Access	R	R	R	R	R	R	R	R
Reset	1	1	1	1	1	1	0	0

Bits 7:4 – JEPIDCL[3:0] Low part of the JEP-106 Identity Code
These bits will always return 0xF when read (JEP-106 identity code is 0x1F).

Bits 3:0 – PARTNBH[3:0] Part Number High
These bits will always return 0xC when read, indicating that this device implements a DSU module instance.

20.12.17 Peripheral Identification 2

Name: PID2
Offset: 0x1FE8
Reset: 0x00000009
Property: -

Bit	31	30	29	28	27	26	25	24
Access								
Reset								

Bit	23	22	21	20	19	18	17	16
Access								
Reset								

Bit	15	14	13	12	11	10	9	8
Access								
Reset								

Bit	7	6	5	4	3	2	1	0
	REVISION[3:0]				JEPU	JEPIDCH[2:0]		
Access	R	R	R	R	R	R	R	R
Reset	0	0	0	0	1	0	0	1

Bits 7:4 – REVISION[3:0] Revision Number
Revision of the peripheral. Starts at 0x0 and increments by one at both major and minor revisions.

Bit 3 – JEPU JEP-106 Identity Code is used
This bit will always return one when read, indicating that JEP-106 code is used.

Bits 2:0 – JEPIDCH[2:0] JEP-106 Identity Code High
These bits will always return 0x1 when read, (JEP-106 identity code is 0x1F).

20.12.18 Peripheral Identification 3

Name: PID3
Offset: 0x1FEC
Reset: 0x00000000
Property: -

Bit	31	30	29	28	27	26	25	24
Access								
Reset								

Bit	23	22	21	20	19	18	17	16
Access								
Reset								

Bit	15	14	13	12	11	10	9	8
Access								
Reset								

Bit	7	6	5	4	3	2	1	0
	REVAND[3:0]				CUSMOD[3:0]			
Access	R	R	R	R	R	R	R	R
Reset	0	0	0	0	0	0	0	0

Bits 7:4 – REVAND[3:0] Revision Number
These bits will always return 0x0 when read.

Bits 3:0 – CUSMOD[3:0] ARM CUSMOD
These bits will always return 0x0 when read.

20.12.19 Component Identification 0

Name: CID0
Offset: 0x1FF0
Reset: 0x0000000D
Property: -

Bit	31	30	29	28	27	26	25	24
Access								
Reset								

Bit	23	22	21	20	19	18	17	16
Access								
Reset								

Bit	15	14	13	12	11	10	9	8
Access								
Reset								

Bit	7	6	5	4	3	2	1	0
	PREAMBLEB0[7:0]							
Access	R	R	R	R	R	R	R	R
Reset	0	0	0	0	1	1	0	1

Bits 7:0 – PREAMBLEB0[7:0] Preamble Byte 0
These bits will always return 0x0000000D when read.

20.12.20 Component Identification 1

Name: CID1
Offset: 0x1FF4
Reset: 0x00000010
Property: -

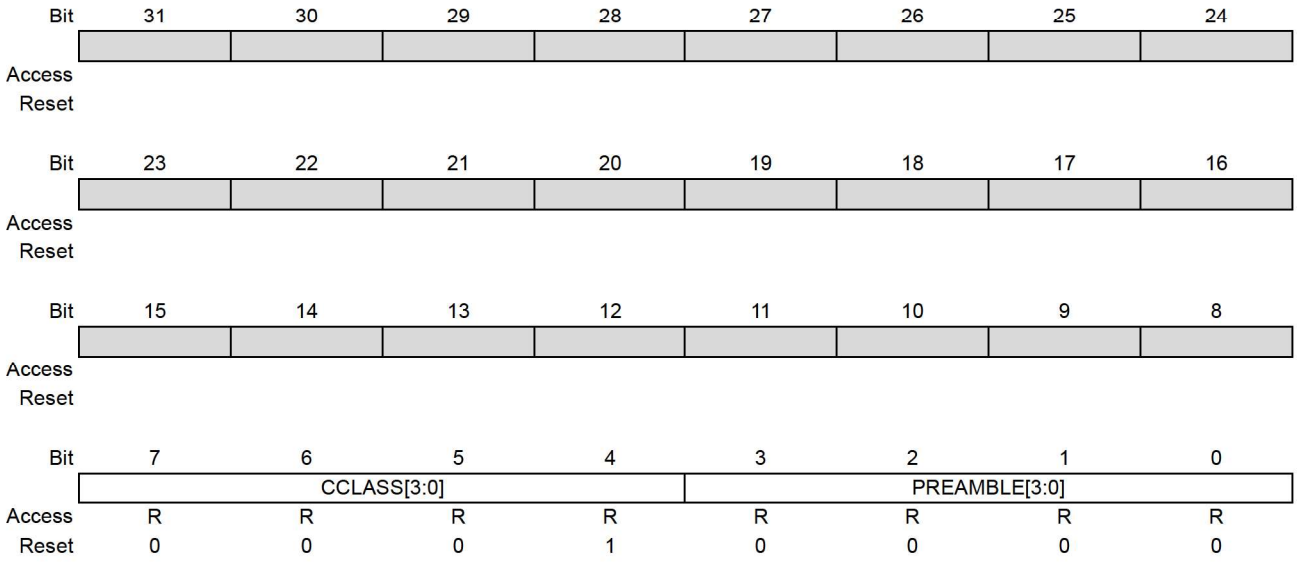

Bit	31	30	29	28	27	26	25	24
Access								
Reset								

Bit	23	22	21	20	19	18	17	16
Access								
Reset								

Bit	15	14	13	12	11	10	9	8
Access								
Reset								

Bit	7	6	5	4	3	2	1	0
	CCLASS[3:0]				PREAMBLE[3:0]			
Access	R	R	R	R	R	R	R	R
Reset	0	0	0	1	0	0	0	0

Bits 7:4 – CCLASS[3:0] Component Class
These bits will always return 0x1 when read indicating that this Arm CoreSight component is ROM table (refer to the Arm Debug Interface v5 Architecture Specification at http://www.arm.com).

Bits 3:0 – PREAMBLE[3:0] Preamble
These bits will always return 0x00 when read.

20.12.21 Component Identification 2

Name: CID2
Offset: 0x1FF8
Reset: 0x00000005
Property: -

Bit	31	30	29	28	27	26	25	24
Access								
Reset								

Bit	23	22	21	20	19	18	17	16
Access								
Reset								

Bit	15	14	13	12	11	10	9	8
Access								
Reset								

Bit	7	6	5	4	3	2	1	0
	PREAMBLEB2[7:0]							
Access	R	R	R	R	R	R	R	R
Reset	0	0	0	0	0	1	0	1

Bits 7:0 – PREAMBLEB2[7:0] Preamble Byte 2
These bits will always return 0x00000005 when read.

20.12.22 Component Identification 3

Name: CID3
Offset: 0x1FFC
Reset: 0x000000B1
Property: -

Bit	31	30	29	28	27	26	25	24
Access								
Reset								

Bit	23	22	21	20	19	18	17	16
Access								
Reset								

Bit	15	14	13	12	11	10	9	8
Access								
Reset								

Bit	7	6	5	4	3	2	1	0
	PREAMBLEB3[7:0]							
Access	R	R	R	R	R	R	R	R
Reset	1	0	1	1	0	0	0	1

Bits 7:0 – PREAMBLEB3[7:0] Preamble Byte 3
These bits will always return 0x000000B1 when read.

21. Divide and Square Root Accelerator (DIVAS)

21.1 Overview

The Divide and Square Root Accelerator (DIVAS) is a programmable 32-bit signed or unsigned hardware divider and a 32-bit unsigned square root hardware engine. The DIVAS is connected to the high-speed bus matrix and may also be accessed using the low-latency CPU local bus (IOBUS; Arm single-cycle I/O port). The DIVAS takes dividend and divisor values and returns the quotient and remainder when it is used as divider. The DIVAS takes unsigned input value and returns its square root and remainder when it is used as square root function.

21.2 Features

- Division accelerator for Cortex-M0+ systems
- 32-bit signed or unsigned integer division
- 32-bit unsigned square root
- 32-bit division in 2-16 cycles
- Programmable leading zero optimization
- Result includes quotient and remainder
- Result includes square root and remainder
- Busy and Divide-by-zero status
- Automatic start of operation when divisor or square root input is loaded

21.3 Block Diagram

Figure 21-1. DIVAS Block Diagram

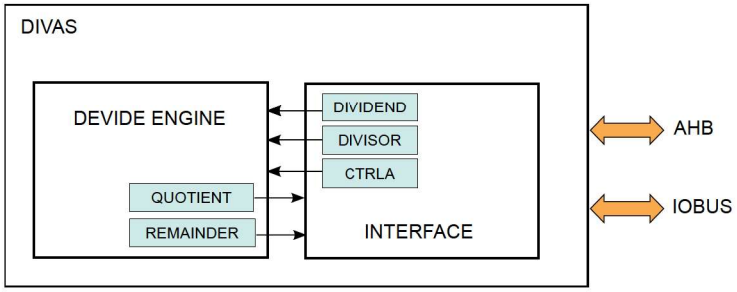

21.4 Peripheral Dependencies

Peripheral	Base Address	IRQ	AHB CLK	APB CLK	Generic CLK	PAC		Events		DMA	Sleep Walking
			Enabled at reset	Enabled at reset	Index	Index	Prot at reset	User	Generator	Index	
DIVAS	0x48000000	-	Y	-	-	-	-	-	-	-	-

21.5 Functional Description

21.5.1 Principle of Operation

The Divide and Square Root Accelerator (DIVAS) supports signed or unsigned hardware division of 32-bit values and unsigned square root of 32-bit value. It is accessible from the CPU via both the AHB bus and IOBUS. When the

dividend and divide registers are programmed, the division starts and the result will be stored in the Result and Remainder registers. The Busy and Divide-by-zero status can be read from STATUS register.

When the square root input register (21.6.7 SQRNUM) is programmed, the square root function starts and the result will be stored in the Result and Remainder registers. The Busy status can be read from STATUS register.

21.5.2 Basic Operation

21.5.2.1 Initialization

The DIVAS configuration cannot be modified while a divide operation is ongoing. The following bits must be written prior to starting a division:

- Sign selection bit in Control A register (21.6.1 CTRLA.SIGNED)
- Leading zero mode bit in Control A register (21.6.1 CTRLA.DLZ)

21.5.2.2 Performing Division

First write the dividend to DIVIDEND register. Writing the divisor to DIVISOR register starts the division and sets the busy bit in the Status register (STATUS.BUSY). When the division has completed, the STATUS.BUSY bit is cleared and the result will be stored in RESULT and REM registers.

The RESULT and REM registers can be read directly through the high-speed bus without checking first STATUS.BUSY. Wait states will be inserted on the high-speed bus until the operation is complete. The IOBUS does not support wait states. For accesses through the IOBUS, the STATUS.BUSY bit must be polled before reading the result from the RESULT and REM registers.

21.5.2.3 Operand Size

Divide

The DIVAS can perform 32-bit signed and unsigned division and the operation follows the equation as below.

$$RESULT[31:0] = DIVIDEND[31:0] / DIVISOR[31:0]$$

$$REMAINDER[31:0] = DIVIDEND[31:0] \,\%\, DIVISOR[31:0]$$

DIVAS completes 32-bit division in 2-16 cycles.

Square Root

The DIVAS can perform 32-bit unsigned division and the operation follows the equation as below.

$$RESULT[31:0] = \sqrt{SQRNUM[31:0]}$$

$$REMAINDER\left[31:0\right] = SQRNUM\left[31:0\right] - RESULT[31:0]^2$$

21.5.2.4 Signed Division

When CTRLA.SIGNED is one, both the input and the result will be in 2's complement format. The results of signed division are such that the remainder and dividend have the same sign and the quotient is negative if the dividend and divisor have opposite signs. 16-bit results are sign extended to 32-bits. Note that when the maximum negative number is divided by the minimum negative number, the resulting quotient overflows the signed integer range and will return the maximum negative number with no indication of the overflow. This occurs for 0x80000000 / 0xFFFFFFFF in 32-bit operation and 0x8000 / 0xFFFF in 16-bit operation.

21.5.2.5 Divide By Zero

A divide by zero fault occurs if the DIVISOR is programmed to zero. QUOTIENT will be zero and the REM is equal to DIVIDEND. Divide by zero sets the Divide-by-zero bit in the Status register (STATUS.DBZ) to one. STATUS.DBZ must be cleared by writing a one to it.

21.5.2.6 Leading Zero Optimization

Leading zero optimization can reduce the time it takes to complete a division by skipping leading zeros in the DIVIDEND (or leading ones in signed mode). Leading zero optimization is enabled by default and can be disabled by the Disable Leading Zero bit in the Control A register (CTRLA.DLZ). When CTRLA.DLZ is zero, 16-bit division completes in 2-8 cycles and 32-bit division completes in 2-16 cycles, depending on the dividend value. If deterministic timing is required, setting CTRLA.DLZ to one forces 16-bit division to always take 8 cycles and 32-bit division to always take 16 cycles.

21.5.2.7 Unsigned Square Root

When the square root input register (21.6.7 SQRNUM) is programmed, the square root function starts and the result will be stored in the Result and Remainder registers. The Busy status can be read from STATUS register.

21.6 Register Summary

Offset	Name	Bit Pos.	7	6	5	4	3	2	1	0
0x00	CTRLA	7:0							DLZ	SIGNED
0x01 ... 0x03	Reserved									
0x04	STATUS	7:0							DBZ	BUSY
0x05 ... 0x07	Reserved									
0x08	DIVIDEND	7:0	DIVIDEND[7:0]							
		15:8	DIVIDEND[15:8]							
		23:16	DIVIDEND[23:16]							
		31:24	DIVIDEND[31:24]							
0x0C	DIVISOR	7:0	DIVISOR[7:0]							
		15:8	DIVISOR[15:8]							
		23:16	DIVISOR[23:16]							
		31:24	DIVISOR[31:24]							
0x10	RESULT	7:0	RESULT[7:0]							
		15:8	RESULT[15:8]							
		23:16	RESULT[23:16]							
		31:24	RESULT[31:24]							
0x14	REM	7:0	REM[7:0]							
		15:8	REM[15:8]							
		23:16	REM[23:16]							
		31:24	REM[31:24]							
0x18	SQRNUM	7:0	SQRNUM[7:0]							
		15:8	SQRNUM[15:8]							
		23:16	SQRNUM[23:16]							
		31:24	SQRNUM[31:24]							

21.6.1 Control A

Name: CTRLA
Offset: 0x00
Reset: 0x00
Property: -

Bit	7	6	5	4	3	2	1	0
							DLZ	SIGNED
Access							R/W	R/W
Reset							0	0

Bit 1 – DLZ Disable Leading Zero Optimization

Value	Description
0	Enable leading zero optimization; 32-bit division takes 2-16 cycles.
1	Disable leading zero optimization; 32-bit division takes 16 cycles.

Bit 0 – SIGNED Signed Division Enable

Value	Description
0	Unsigned division.
1	Signed division.

21.6.2 Status

Name: STATUS
Offset: 0x04
Reset: 0x00
Property: -

Bit	7	6	5	4	3	2	1	0
							DBZ	BUSY
Access							R/W	R/W
Reset							0	0

Bit 1 – DBZ Disable-By-Zero
Writing a zero to this bit has no effect.
Writing a one to this bit clears DBZ to zero.

Value	Description
0	A divide-by-zero fault has not occurred
1	A divide-by-zero fault has occurred

Bit 0 – BUSY DIVAS Accelerator Busy
This bit is set when a value is written to the 21.6.4 DIVISOR or 21.6.7 SQRNUM registers.
This bit is cleared when either division or square root function completes and results are ready in the 21.6.5 RESULT and REM registers.

Value	Description
0	DIVAS is idle
1	DIVAS is busy with an ongoing division

21.6.3 Dividend

Name: DIVIDEND
Offset: 0x08
Reset: 0x0000
Property: -

Bit	31	30	29	28	27	26	25	24
	DIVIDEND[31:24]							
Access	R/W	R/W	R/W	R/W	R/W	R/W	R/W	R/W
Reset	0	0	0	0	0	0	0	0

Bit	23	22	21	20	19	18	17	16
	DIVIDEND[23:16]							
Access	R/W	R/W	R/W	R/W	R/W	R/W	R/W	R/W
Reset	0	0	0	0	0	0	0	0

Bit	15	14	13	12	11	10	9	8
	DIVIDEND[15:8]							
Access	R/W	R/W	R/W	R/W	R/W	R/W	R/W	R/W
Reset	0	0	0	0	0	0	0	0

Bit	7	6	5	4	3	2	1	0
	DIVIDEND[7:0]							
Access	R/W	R/W	R/W	R/W	R/W	R/W	R/W	R/W
Reset	0	0	0	0	0	0	0	0

Bits 31:0 – DIVIDEND[31:0] Dividend Value
Holds the 32-bit dividend for the divide operation. If the Signed bit in Control A register (CTRLA.SIGNED) is zero, DIVIDEND is unsigned. If CTRLA.SIGNED = 1, DIVIDEND is signed two's complement. Refer to 21.5.2.2 Performing Division, 21.5.2.3 Operand Size and 21.5.2.4 Signed Division.

21.6.4 Divisor

Name: DIVISOR
Offset: 0x0C
Reset: 0x0000
Property: -

Bit	31	30	29	28	27	26	25	24
	DIVISOR[31:24]							
Access	R/W	R/W	R/W	R/W	R/W	R/W	R/W	R/W
Reset	0	0	0	0	0	0	0	0

Bit	23	22	21	20	19	18	17	16
	DIVISOR[23:16]							
Access	R/W	R/W	R/W	R/W	R/W	R/W	R/W	R/W
Reset	0	0	0	0	0	0	0	0

Bit	15	14	13	12	11	10	9	8
	DIVISOR[15:8]							
Access	R/W	R/W	R/W	R/W	R/W	R/W	R/W	R/W
Reset	0	0	0	0	0	0	0	0

Bit	7	6	5	4	3	2	1	0
	DIVISOR[7:0]							
Access	R/W	R/W	R/W	R/W	R/W	R/W	R/W	R/W
Reset	0	0	0	0	0	0	0	0

Bits 31:0 – DIVISOR[31:0] Divisor Value
Holds the 32-bit divisor for the divide operation. If the Signed bit in Control A register (CTRLA.SIGNED) is zero, DIVISOR is unsigned. If CTRLA.SIGNED = 1, DIVISOR is signed two's complement. Writing the DIVISOR register will start the divide function. Refer to 21.5.2.2 Performing Division, 21.5.2.3 Operand Size and 21.5.2.4 Signed Division.

21.6.5 Result

Name: RESULT
Offset: 0x10
Reset: 0x0000
Property: -

Bit	31	30	29	28	27	26	25	24
	RESULT[31:24]							
Access	R	R	R	R	R	R	R	R
Reset	0	0	0	0	0	0	0	0

Bit	23	22	21	20	19	18	17	16
	RESULT[23:16]							
Access	R	R	R	R	R	R	R	R
Reset	0	0	0	0	0	0	0	0

Bit	15	14	13	12	11	10	9	8
	RESULT[15:8]							
Access	R	R	R	R	R	R	R	R
Reset	0	0	0	0	0	0	0	0

Bit	7	6	5	4	3	2	1	0
	RESULT[7:0]							
Access	R	R	R	R	R	R	R	R
Reset	0	0	0	0	0	0	0	0

Bits 31:0 – RESULT[31:0] Result of Operation
Holds the 32-bit result of the last performed operation. For a divide operation this is the quotient. If the Signed bit in Control A register (CTRLA.SIGNED) is zero, the quotient is unsigned. If CTRLA.SIGNED = 1, the quotient is signed two's complement. For a square root operation this is the square root. Refer to 21.5.2.2 Performing Division, 21.5.2.3 Operand Size and 21.5.2.4 Signed Division.

21.6.6 Remainder

Name: REM
Offset: 0x14
Reset: 0x0000
Property: -

Bit	31	30	29	28	27	26	25	24
	REM[31:24]							
Access	R	R	R	R	R	R	R	R
Reset	0	0	0	0	0	0	0	0

Bit	23	22	21	20	19	18	17	16
	REM[23:16]							
Access	R	R	R	R	R	R	R	R
Reset	0	0	0	0	0	0	0	0

Bit	15	14	13	12	11	10	9	8
	REM[15:8]							
Access	R	R	R	R	R	R	R	R
Reset	0	0	0	0	0	0	0	0

Bit	7	6	5	4	3	2	1	0
	REM[7:0]							
Access	R	R	R	R	R	R	R	R
Reset	0	0	0	0	0	0	0	0

Bits 31:0 – REM[31:0] Remainder of Operation
Holds the 32-bit remainder of the last performed operation. For a divide operation this is the division remainder. If the Signed bit in Control A register (CTRLA.SIGNED) is zero, the quotient is unsigned. If CTRLA.SIGNED = 1, the quotient is signed two's complement. For a square root operation this is the square root remainder. Refer to 21.5.2.2 Performing Division, 21.5.2.3 Operand Size and 21.5.2.4 Signed Division.

21.6.7 Square Root Input

Name: SQRNUM
Offset: 0x18
Reset: 0x0000
Property: -

Bit	31	30	29	28	27	26	25	24
	SQRNUM[31:24]							
Access	R/W	R/W	R/W	R/W	R/W	R/W	R/W	R/W
Reset	0	0	0	0	0	0	0	0

Bit	23	22	21	20	19	18	17	16
	SQRNUM[23:16]							
Access	R/W	R/W	R/W	R/W	R/W	R/W	R/W	R/W
Reset	0	0	0	0	0	0	0	0

Bit	15	14	13	12	11	10	9	8
	SQRNUM[15:8]							
Access	R/W	R/W	R/W	R/W	R/W	R/W	R/W	R/W
Reset	0	0	0	0	0	0	0	0

Bit	7	6	5	4	3	2	1	0
	SQRNUM[7:0]							
Access	R/W	R/W	R/W	R/W	R/W	R/W	R/W	R/W
Reset	0	0	0	0	0	0	0	0

Bits 31:0 – SQRNUM[31:0] Square Root Input
Holds the 32-bit unsigned input for the square root operation. Writing the SQRNUM register will start the square root function. Refer to 21.5.2.7 Unsigned Square Root.

22. Watchdog Timer (WDT)

22.1 Overview

The Watchdog Timer (WDT) is a system function for monitoring correct program operation. It makes it possible to recover from error situations such as runaway or deadlocked code. The WDT is configured to a predefined time-out period, and is constantly running when enabled. If the WDT is not cleared within the time-out period, it will issue a system reset. An early-warning interrupt is available to indicate an upcoming watchdog time-out condition.

The window mode makes it possible to define a time slot or window inside the total time-out period during which the WDT must be cleared. If the WDT is cleared outside this window, either too early or too late, a system reset will be issued. Compared to the normal mode, this can also catch situations where a code error causes the WDT to be cleared too frequently.

When enabled, the WDT will run in Active mode and all sleep modes. It is asynchronous and runs from a CPU-independent clock source. The WDT will continue operation and issue a system reset or interrupt even if the main clocks fail.

22.2 Features

- Issues a system reset if the Watchdog Timer is not cleared before its time-out period
- Early Warning interrupt generation
- Asynchronous operation from dedicated oscillator
- Two types of operation
  - Normal mode
  - Window mode
- Selectable time-out periods
  - From 8 cycles to 16,384 cycles in Normal mode
  - From 16 cycles to 32,768 cycles in Window mode
- Always-On capability

22.3 Block Diagram

Figure 22-1. WDT Block Diagram

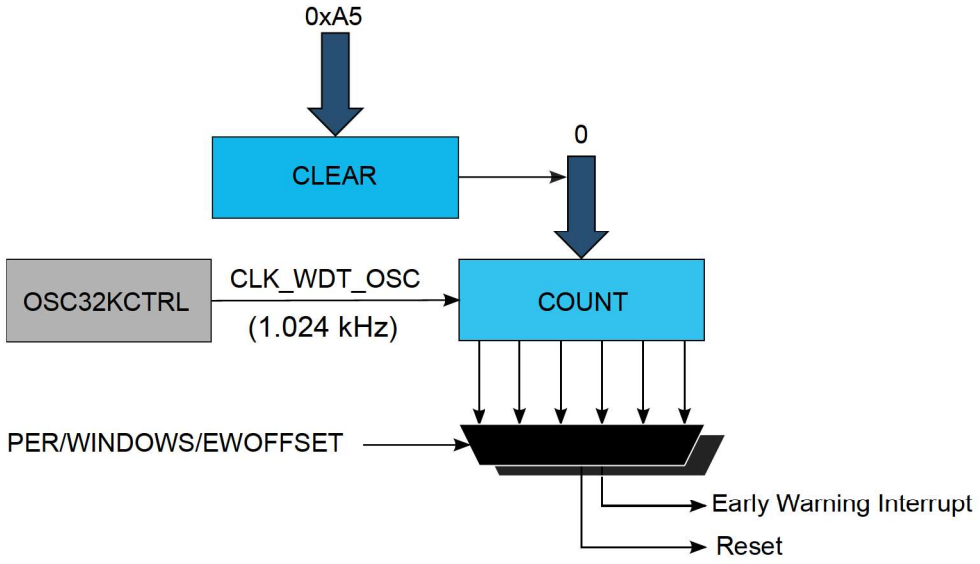

22.4 Peripheral Dependencies

Peripheral	Base Address	IRQ	AHB CLK	APB CLK	Generic CLK	PAC		Events		DMA	Sleep Walking
			Enabled at reset	Enabled at reset	Index	Index	Prot at reset	User	Generator	Index	
WDT	0x40002000	1	-	Y	-	8	N	-	-	-	Y

22.5 Functional Description

22.5.1 Principle of Operation

The Watchdog Timer (WDT) is a system for monitoring correct program operation, making it possible to recover from error situations, such as runaway code, by issuing a Reset. When enabled, the WDT is a constantly running timer that is configured to a predefined time-out period. Before the end of the time-out period, the WDT should be set back, or else, a system Reset is issued.

The WDT has two modes of operation, Normal mode and Window mode. Both modes offer the option of Early Warning interrupt generation. The description for each of the basic modes is given below. The settings in the Control A register (CTRLA) and the Interrupt Enable register (handled by INTENCLR/INTENSET) determine the mode of operation:

Table 22-1. WDT Operating Modes

CTRLA.ENABLE	CTRLA.WEN	Interrupt Enable	Mode
0	x	x	Stopped
1	0	0	Normal mode
1	0	1	Normal mode with Early Warning interrupt
1	1	0	Window mode
1	1	1	Window mode with Early Warning interrupt

22.5.2 Basic Operation

22.5.2.1 Initialization

The following bits are enable-protected, meaning that they can only be written when the WDT is disabled (CTRLA.ENABLE=0):

- Control A register (CTRLA), except the Enable bit (CTRLA.ENABLE)
- Configuration register (CONFIG)
- Early Warning Interrupt Control register (EWCTRL)

Enable-protected bits in the CTRLA register can be written at the same time as CTRLA.ENABLE is written to '1', but not at the same time as CTRLA.ENABLE is written to '0'.

The WDT can be configured only while the WDT is disabled. The WDT is configured by defining the required Time-Out Period bits in the Configuration register (CONFIG.PER). If Window mode operation is desired, the Window Enable bit in the Control A register must be set (CTRLA.WEN=1) and the Window Period bits in the Configuration register (CONFIG.WINDOW) must be defined.

Enable-protection is denoted by the "Enable-Protected" property in the register description.

22.5.2.2 Configurable Reset Values

After a Power-on Reset, some registers will be loaded with initial values from the 8.3 NVM User Row Mapping.

This includes the following bits and bit groups:

- Enable bit in the Control A register, CTRLA.ENABLE

- Always-On bit in the Control A register, CTRLA.ALWAYSON
- Watchdog Timer Windows Mode Enable bit in the Control A register, CTRLA.WEN
- Watchdog Timer Windows Mode Time-Out Period bits in the Configuration register, CONFIG.WINDOW
- Time-Out Period bits in the Configuration register, CONFIG.PER
- Early Warning Interrupt Time Offset bits in the Early Warning Interrupt Control register, EWCTRL.EWOFFSET

22.5.2.3 Enabling, Disabling, and Resetting

The WDT is enabled by writing a '1' to the Enable bit in the Control A register (CTRLA.ENABLE). The WDT is disabled by writing a '0' to CTRLA.ENABLE.

The WDT can be disabled only if the Always-On bit in the Control A register (CTRLA.ALWAYSON) is '0'.

22.5.2.4 Normal Mode

In Normal mode operation, the length of a time-out period is configured in CONFIG.PER. The WDT is enabled by writing a '1' to the Enable bit in the Control A register (CTRLA.ENABLE). Once enabled, the WDT will issue a system reset if a time-out occurs. This can be prevented by clearing the WDT at any time during the time-out period.

The WDT is cleared and a new WDT time-out period is started by writing 0xA5 to the Clear register (CLEAR). Writing any other value than 0xA5 to CLEAR will issue an immediate system reset.

There are 12 possible WDT time-out (TO_{WDT}) periods, selectable from 8ms to 16s.

By default, the early warning interrupt is disabled. If it is desired, the Early Warning Interrupt Enable bit in the Interrupt Enable register (INTENSET.EW) must be written to '1'. The Early Warning Interrupt is disabled again by writing a '1' to the Early Warning Interrupt bit in the Interrupt Enable Clear register (INTENCLR.EW).

If the Early Warning Interrupt is enabled, an interrupt is generated prior to a WDT time-out condition. In Normal mode, the Early Warning Offset bits in the Early Warning Interrupt Control register, EWCTRL.EWOFFSET, define the time when the early warning interrupt occurs. The Normal mode operation is illustrated in the figure Normal-Mode Operation.

Figure 22-2. Normal-Mode Operation

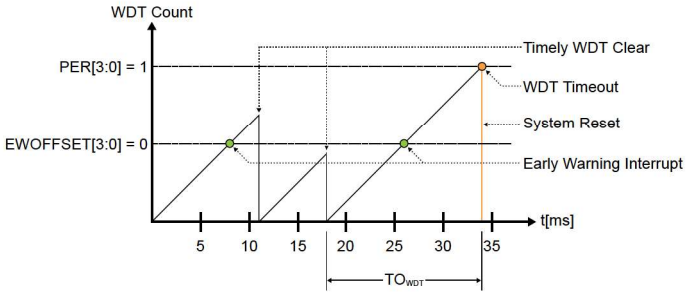

22.5.2.5 Window Mode

In Window mode operation, the WDT uses two different time specifications: the WDT can only be cleared by writing 0xA5 to the CLEAR register *after* the closed window time-out period (TO_{WDTW}), during the subsequent Normal time-out period (TO_{WDT}). If the WDT is cleared before the time window opens (before TO_{WDTW} is over), the WDT will issue a system reset.

Both parameters TO_{WDTW} and TO_{WDT} are periods in a range from 8ms to 16s, so the total duration of the WDT time-out period is the sum of the two parameters.

The closed window period is defined by the Window Period bits in the Configuration register (CONFIG.WINDOW), and the open window period is defined by the Period bits in the Configuration register (CONFIG.PER).

By default, the Early Warning interrupt is disabled. If it is desired, the Early Warning Interrupt Enable bit in the Interrupt Enable register (INTENSET.EW) must be written to '1'. The Early Warning Interrupt is disabled again by writing a '1' to the Early Warning Interrupt bit in the Interrupt Enable Clear (INTENCLR.EW) register.

If the Early Warning interrupt is enabled in Window mode, the interrupt is generated at the start of the open window period, that is after TO_{WDTW}. The Window mode operation is illustrated in figure Window-Mode Operation.

Figure 22-3. Window-Mode Operation

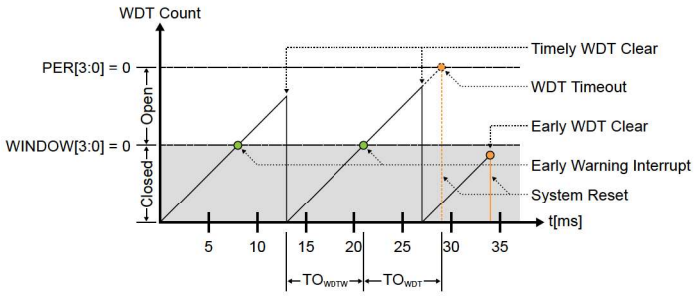

22.5.3 Interrupts

The WDT has the following interrupt source:

- Early Warning (EW): Indicates that the counter is approaching the time-out condition.
  - This interrupt is an asynchronous wake-up source.

Each interrupt source has an interrupt flag associated with it. The interrupt flag in the Interrupt Flag Status and Clear (INTFLAG) register is set when the interrupt condition occurs.

Each interrupt can be individually enabled by writing a '1' to the corresponding bit in the Interrupt Enable Set (INTENSET) register, and disabled by writing a '1' to the corresponding bit in the Interrupt Enable Clear (INTENCLR) register.

An interrupt request is generated when the interrupt flag is set and the corresponding interrupt is enabled. The interrupt request remains active until the interrupt flag is cleared, the interrupt is disabled, or the WDT is reset. See the 22.6.6 INTFLAG register description for details on how to clear interrupt flags. All interrupt requests from the peripheral are ORed together on system level to generate one combined interrupt request to the NVIC. The user must read the INTFLAG register to determine which interrupt condition is present.

Note: Interrupts must be globally enabled for interrupt requests to be generated.

22.5.4 Synchronization

Due to asynchronicity between the main clock domain and the peripheral clock domains, some registers need to be synchronized when written or read.

The following registers are synchronized when written:

- Enable bit in Control A register (CTRLA.ENABLE)
- Window Enable bit in Control A register (CTRLA.WEN)
- Always-On bit in control Control A (CTRLA.ALWAYSON)
- Watchdog Clear register (CLEAR)

Required write-synchronization is denoted by the "Write-Synchronized" property in the register description.

Required read-synchronization is denoted by the "Read-Synchronized" property in the register description.

22.5.5 Additional Features

22.5.5.1 Always-On Mode

The Always-On mode is enabled by setting the Always-On bit in the Control A register (CTRLA.ALWAYSON=1). When the Always-On mode is enabled, the WDT runs continuously, regardless of the state of CTRLA.ENABLE. Once written, the Always-On bit can only be cleared by a power-on reset. The Configuration (CONFIG) and Early Warning Control (EWCTRL) registers are read-only registers while the CTRLA.ALWAYSON bit is set. Thus, the time period configuration bits (CONFIG.PER, CONFIG.WINDOW, EWCTRL.EWOFFSET) of the WDT cannot be changed.

Enabling or disabling Window mode operation by writing the Window Enable bit (CTRLA.WEN) is allowed while in Always-On mode, but note that CONFIG.PER cannot be changed.

The Interrupt Clear and Interrupt Set registers are accessible in the Always-On mode. The Early Warning interrupt can still be enabled or disabled while in the Always-On mode, but note that EWCTRL.EWOFFSET cannot be changed.

Table WDT Operating Modes With Always-On shows the operation of the WDT for CTRLA.ALWAYSON=1.

Table 22-2. WDT Operating Modes With Always-On

WEN	Interrupt Enable	Mode
0	0	Always-on and normal mode
0	1	Always-on and normal mode with Early Warning interrupt
1	0	Always-on and window mode
1	1	Always-on and window mode with Early Warning interrupt

22.5.5.2 Early Warning

The Early Warning interrupt notifies that the WDT is approaching its time-out condition. The Early Warning interrupt behaves differently in Normal mode and in Window mode.

In Normal mode, the Early Warning interrupt generation is defined by the Early Warning Offset in the Early Warning Control register (EWCTRL.EWOFFSET). The Early Warning Offset bits define the number of CLK_WDT_OSC clocks before the interrupt is generated, relative to the start of the watchdog time-out period.

The user must take caution when programming the Early Warning Offset bits. If these bits define an Early Warning interrupt generation time greater than the watchdog time-out period, the watchdog time-out system reset is generated prior to the Early Warning interrupt. Consequently, the Early Warning interrupt will never be generated.

In window mode, the Early Warning interrupt is generated at the start of the open window period. In a typical application where the system is in sleep mode, the Early Warning interrupt can be used to wake up and clear the Watchdog Timer, after which the system can perform other tasks or return to sleep mode.

Example:

If the WDT is operating in Normal mode with CONFIG.PER = 0x2 and EWCTRL.EWOFFSET = 0x1, the Early Warning interrupt is generated 16 CLK_WDT_OSC clock cycles after the start of the time-out period. The time-out system reset is generated 32 CLK_WDT_OSC clock cycles after the start of the watchdog time-out period.

22.6 Register Summary

Offset	Name	Bit Pos.	7	6	5	4	3	2	1	0
0x00	CTRLA	7:0	ALWAYSON					WEN	ENABLE	
0x01	CONFIG	7:0	WINDOW[3:0]				PER[3:0]			
0x02	EWCTRL	7:0					EWOFFSET[3:0]			
0x03	Reserved									
0x04	INTENCLR	7:0								EW
0x05	INTENSET	7:0								EW
0x06	INTFLAG	7:0								EW
0x07	Reserved									
0x08	SYNCBUSY	7:0				CLEAR	ALWAYSON	WEN	ENABLE	
		15:8								
		23:16								
		31:24								
0x0C	CLEAR	7:0	CLEAR[7:0]							

22.6.1 Control A

Name: CTRLA
Offset: 0x00
Reset: X determined from NVM User Row
Property: PAC Write-Protection, Write-Synchronized Bits

Bit	7	6	5	4	3	2	1	0
	ALWAYSON					WEN	ENABLE	
Access	R/W					R/W	R/W	
Reset	x					x	x	

Bit 7 – ALWAYSON Always-On
This bit allows the WDT to run continuously. After being set, this bit cannot be written to '0', and the WDT will remain enabled until a power-on Reset is received. When this bit is '1', the Control A register (CTRLA), the Configuration register (CONFIG) and the Early Warning Control register (EWCTRL) will be read-only, and any writes to these registers are not allowed.
Writing a '0' to this bit has no effect.
This bit is loaded from NVM user row at start-up.
Note: This bit is not synchronized.

Value	Description
0	The WDT is enabled and disabled through the ENABLE bit.
1	The WDT is enabled and can only be disabled by a Power-on Reset (POR).

Bit 2 – WEN Watchdog Timer Window Mode Enable
This bit enables Window mode. It can only be written if the peripheral is disabled unless CTRLA.ALWAYSON=1.
This bit is loaded from NVM User Row at startup.
Note: This bit is not synchronized.

Value	Description
0	Window mode is disabled (normal operation).
1	Window mode is enabled.

Bit 1 – ENABLE Enable
This bit enables or disables the WDT. It can only be written if CTRLA.ALWAYSON=0.
This bit is not Enable-Protected.
This bit is loaded from NVM User Row at startup.
Note: This bit is write-synchronized: SYNCBUSY.ENABLE must be checked to ensure the CTRLA.ENABLE synchronization is complete.

Value	Description
0	The WDT is disabled.
1	The WDT is enabled.

22.6.2 Configuration

Name: CONFIG
Offset: 0x01
Reset: X determined from NVM User Row
Property: PAC Write-Protection

Bit	7	6	5	4	3	2	1	0
	WINDOW[3:0]				PER[3:0]			
Access	R/W	R/W	R/W	R/W	R/W	R/W	R/W	R/W
Reset	x	x	x	x	x	x	x	x

Bits 7:4 – WINDOW[3:0] Window Mode Time-Out Period
In Window mode, these bits determine the watchdog closed window period as a number of cycles of the 1.024kHz CLK_WDT_OSC clock.
These bits are loaded from NVM User Row at start-up.

Value	Name	Description
0x0	CYC8	8 clock cycles
0x1	CYC16	16 clock cycles
0x2	CYC32	32 clock cycles
0x3	CYC64	64 clock cycles
0x4	CYC128	128 clock cycles
0x5	CYC256	256 clock cycles
0x6	CYC512	512 clock cycles
0x7	CYC1024	1024 clock cycles
0x8	CYC2048	2048 clock cycles
0x9	CYC4096	4096 clock cycles
0xA	CYC8192	8192 clock cycles
0xB	CYC16384	16384 clock cycles
0xC - 0xF	-	Reserved

Bits 3:0 – PER[3:0] Time-Out Period
These bits determine the watchdog time-out period as a number of 1.024kHz CLK_WDTOSC clock cycles. In Window mode operation, these bits define the open window period.
These bits are loaded from NVM User Row at startup.

Value	Name	Description
0x0	CYC8	8 clock cycles
0x1	CYC16	16 clock cycles
0x2	CYC32	32 clock cycles
0x3	CYC64	64 clock cycles
0x4	CYC128	128 clock cycles
0x5	CYC256	256 clock cycles
0x6	CYC512	512 clock cycles
0x7	CYC1024	1024 clock cycles
0x8	CYC2048	2048 clock cycles
0x9	CYC4096	4096 clock cycles
0xA	CYC8192	8192 clock cycles
0xB	CYC16384	16384 clock cycles
0xC - 0xF	-	Reserved

22.6.3 Early Warning Control

Name: EWCTRL
Offset: 0x02
Reset: X determined from NVM User Row
Property: PAC Write-Protection

Bit	7	6	5	4	3	2	1	0
					EWOFFSET[3:0]			
Access					R/W	R/W	R/W	R/W
Reset					x	x	x	x

Bits 3:0 – EWOFFSET[3:0] Early Warning Interrupt Time Offset
These bits determine the number of GCLK_WDT clock cycles between the start of the watchdog time-out period and the generation of the Early Warning interrupt. These bits are loaded from NVM User Row at start-up.

Value	Name	Description
0x0	CYC8	8 clock cycles
0x1	CYC16	16 clock cycles
0x2	CYC32	32 clock cycles
0x3	CYC64	64 clock cycles
0x4	CYC128	128 clock cycles
0x5	CYC256	256 clock cycles
0x6	CYC512	512 clock cycles
0x7	CYC1024	1024 clock cycles
0x8	CYC2048	2048 clock cycles
0x9	CYC4096	4096 clock cycles
0xA	CYC8192	8192 clock cycles
0xB - 0xF	-	Reserved

22.6.4 Interrupt Enable Clear

Name: INTENCLR
Offset: 0x04
Reset: 0x00
Property: PAC Write-Protection

This register allows the user to disable an interrupt without doing a read-modify-write operation. Changes in this register will also be reflected in the Interrupt Enable Set (INTENSET) register.

Bit	7	6	5	4	3	2	1	0
								EW
Access								R/W
Reset								0

Bit 0 – EW Early Warning Interrupt Enable
Writing a '0' to this bit has no effect.
Writing a '1' to this bit clears the Early Warning Interrupt Enable bit, which disables the Early Warning interrupt.

Value	Description
0	The Early Warning interrupt is disabled.
1	The Early Warning interrupt is enabled.

22.6.5 Interrupt Enable Set

Name: INTENSET
Offset: 0x05
Reset: 0x00
Property: PAC Write-Protection

This register allows the user to enable an interrupt without doing a read-modify-write operation. Changes in this register will also be reflected in the Interrupt Enable Clear (INTENCLR) register.

Bit	7	6	5	4	3	2	1	0
								EW
Access								R/W
Reset								0

Bit 0 – EW Early Warning Interrupt Enable
Writing a '0' to this bit has no effect.
Writing a '1' to this bit sets the Early Warning Interrupt Enable bit, which enables the Early Warning interrupt.

Value	Description
0	The Early Warning interrupt is disabled.
1	The Early Warning interrupt is enabled.

22.6.6 Interrupt Flag Status and Clear

Name: INTFLAG
Offset: 0x06
Reset: 0x00
Property: -

Bit	7	6	5	4	3	2	1	0
								EW
Access								R/W
Reset								0

Bit 0 – EW Early Warning
This flag is cleared by writing a '1' to it.
This flag is set when an Early Warning interrupt occurs, as defined by the EWOFFSET bit group in EWCTRL.
Writing a '0' to this bit has no effect.
Writing a '1' to this bit clears the Early Warning interrupt flag.

22.6.7 Synchronization Busy

Name: SYNCBUSY
Offset: 0x08
Reset: 0x00000000
Property: -

Bit	31	30	29	28	27	26	25	24
Access								
Reset								

Bit	23	22	21	20	19	18	17	16
Access								
Reset								

Bit	15	14	13	12	11	10	9	8
Access								
Reset								

Bit	7	6	5	4	3	2	1	0
				CLEAR	ALWAYSON	WEN	ENABLE	
Access				R	R	R	R	
Reset				0	0	0	0	

Bit 4 – CLEAR CLEAR Synchronization Busy

Value	Description
0	Write synchronization of the CLEAR register is complete.
1	Write synchronization of the CLEAR register is ongoing.

Bit 3 – ALWAYSON ALWAYSON Synchronization Busy

Value	Description
0	Write synchronization of the CTRLA.ALWAYSON bit is complete.
1	Write synchronization of the CTRLA.ALWAYSON bit is ongoing.

Bit 2 – WEN Window Enable Synchronization Busy

Value	Description
0	Write synchronization of the CTRLA.WEN bit is complete.
1	Write synchronization of the CTRLA.WEN bit is ongoing.

Bit 1 – ENABLE Enable Synchronization Busy

Value	Description
0	Write synchronization of the CTRLA.ENABLE bit is complete.
1	Write synchronization of the CTRLA.ENABLE bit is ongoing.

22.6.8 Clear

Name: CLEAR
Offset: 0x0C
Reset: 0x00
Property: Write-Synchronized

Note: CLEAR is a write-synchronized register: SYNCBUSY.CLEAR must be checked to ensure the CLEAR synchronization is complete.

Bit	7	6	5	4	3	2	1	0
	CLEAR[7:0]							
Access	W	W	W	W	W	W	W	W
Reset	0	0	0	0	0	0	0	0

Bits 7:0 – CLEAR[7:0] Watchdog Clear
In Normal mode, writing 0xA5 to this register during the watchdog time-out period will clear the Watchdog Timer and the watchdog time-out period is restarted.
In Window mode, any writing attempt to this register before the time-out period started (i.e., during TO_{WDTW}) will issue an immediate system Reset. Writing 0xA5 during the time-out period TO_{WDT} will clear the Watchdog Timer and the complete time-out sequence (first TO_{WDTW} then TO_{WDT}) is restarted.
In both modes, writing any other value than 0xA5 will issue an immediate system Reset.

23. Real-Time Counter (RTC)

23.1 Overview

The Real-Time Counter (RTC) is a 32-bit counter with a 10-bit programmable prescaler that typically runs continuously to keep track of time. The RTC can wake up the device from sleep modes using the alarm/compare wake up, periodic wake up, or overflow wake up mechanisms.

The RTC can generate periodic peripheral events from outputs of the prescaler, as well as alarm/compare interrupts and peripheral events, which can trigger at any counter value. Additionally, the timer can trigger an overflow interrupt and peripheral event, and can be reset on the occurrence of an alarm/compare match. This allows periodic interrupts and peripheral events at very long and accurate intervals.

The 10-bit programmable prescaler can scale down the clock source. By this, a wide range of resolutions and time-out periods can be configured. With a 32.768kHz clock source, the minimum counter tick interval is 30.5µs, and time-out periods can range up to 36 hours. For a counter tick interval of 1s, the maximum time-out period is more than 136 years.

23.2 Features

- 32-bit counter with 10-bit prescaler
- Multiple clock sources
- 32-bit or 16-bit counter mode
- One 32-bit or two 16-bit compare values
- Clock/Calendar mode
  - Time in seconds, minutes, and hours (12/24)
  - Date in day of month, month, and year
  - Leap year correction
- Digital prescaler correction/tuning for increased accuracy
- Overflow, alarm/compare match and prescaler interrupts and events
  - Optional clear on alarm/compare match
- Two GP Registers

23.3 Block Diagram

Figure 23-1. RTC Block Diagram (Mode 0 — 32-Bit Counter)

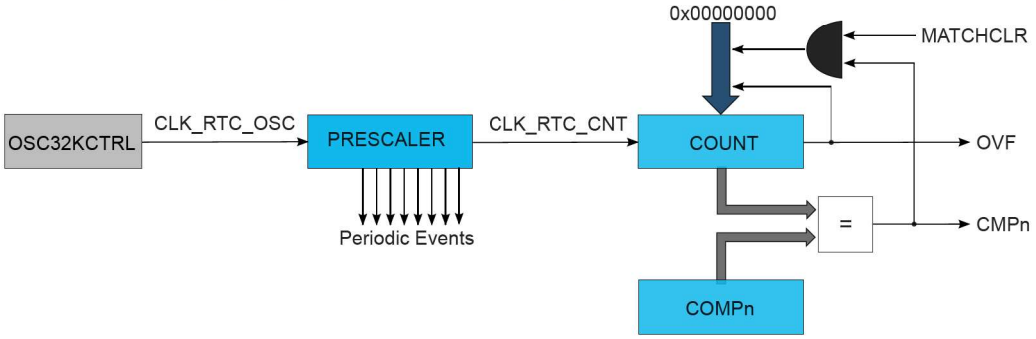

Figure 23-2. RTC Block Diagram (Mode 1 — 16-Bit Counter)

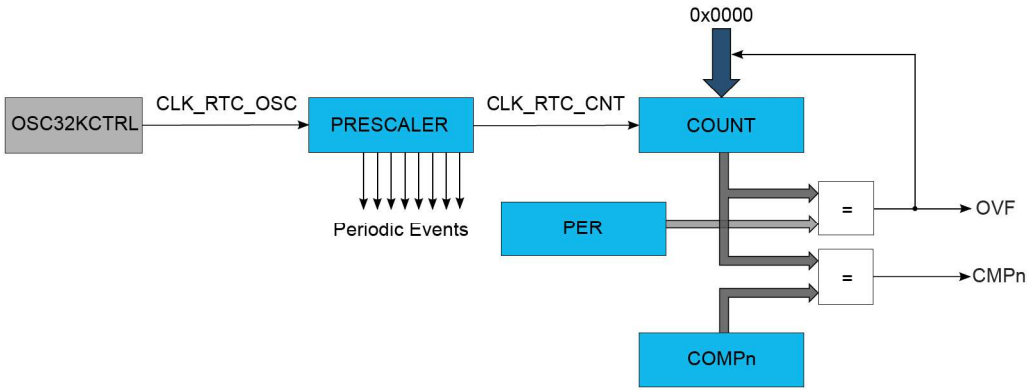

Figure 23-3. RTC Block Diagram (Mode 2 — Clock/Calendar)

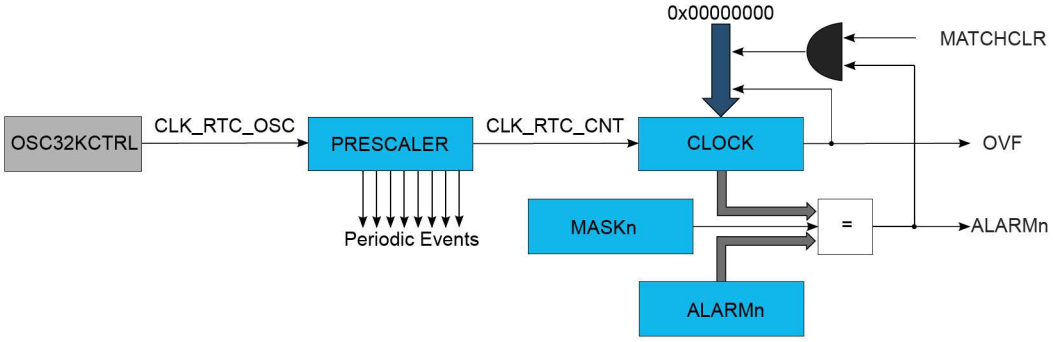

23.4 Peripheral Dependencies

Peripheral	Base Address	IRQ	AHB CLK	APB CLK	Generic CLK	PAC		Events		DMA	Sleep Walking
			Enabled at reset	Enabled at reset	Index	Index	Prot at reset	User	Generator	Index	
RTC	0x40002400	2	-	Y	-	9	N	-	3: CMP0/ALARM0 4: CMP1 5: OVF 6-13: PER0-7	-	Y

23.5 Functional Description

23.5.1 Principle of Operation

The RTC keeps track of time in the system and enables periodic events, as well as interrupts and events at a specified time. The RTC consists of a 10-bit prescaler that feeds a 32-bit counter. The actual format of the 32-bit counter depends on the RTC operating mode.

The RTC can function in one of these modes:

- Mode 0 - COUNT32: RTC serves as 32-bit counter
- Mode 1 - COUNT16: RTC serves as 16-bit counter
- Mode 2 - CLOCK: RTC serves as clock/calendar with alarm functionality

23.5.2 Basic Operation

23.5.2.1 Initialization

The following bits are enable-protected, meaning that they can only be written when the RTC is disabled (CTRLA.ENABLE=0):

- Operating Mode bits in the Control A register (CTRLA.MODE)
- Prescaler bits in the Control A register (CTRLA.PRESCALER)
- Clear on Match bit in the Control A register (CTRLA.MATCHCLR)
- Clock Representation bit in the Control A register (CTRLA.CLKREP)

The following registers are enable-protected:

- Event Control register (EVCTRL)

Enable-protected bits and registers can be changed only when the RTC is disabled (CTRLA.ENABLE=0). If the RTC is enabled (CTRLA.ENABLE=1), these operations are necessary: first write CTRLA.ENABLE=0 and check whether the write synchronization has finished, then change the desired bit field value. Enable-protected bits in CTRLA register can be written at the same time as CTRLA.ENABLE is written to '1', but not at the same time as CTRLA.ENABLE is written to '0'.

Enable-protection is denoted by the "Enable-Protected" property in the register description.

The RTC prescaler divides the source clock for the RTC counter.

Note: In Clock/Calendar mode, the prescaler must be configured to provide a 1Hz clock to the counter for correct operation.

The frequency of the RTC clock (CLK_RTC_CNT) is given by the following formula:

$$f_{CLK_RTC_CNT} = \frac{f_{CLK_RTC_OSC}}{2^{PRESCALER}}$$

The frequency of the oscillator clock, CLK_RTC_OSC, is given by $f_{CLK_RTC_OSC}$, and $f_{CLK_RTC_CNT}$ is the frequency of the internal prescaled RTC clock, CLK_RTC_CNT.

23.5.2.2 Enabling, Disabling, and Resetting

The RTC is enabled by setting the Enable bit in the Control A register (CTRLA.ENABLE=1). The RTC is disabled by writing CTRLA.ENABLE=0.

The RTC is reset by setting the Software Reset bit in the Control A register (CTRLA.SWRST=1). All registers in the RTC, except DEBUG, will be reset to their initial state, and the RTC will be disabled. The RTC must be disabled before resetting it.

23.5.2.3 32-Bit Counter (Mode 0)

When the RTC Operating Mode bits in the Control A register (CTRLA.MODE) are written to 0x0, the counter operates in 32-bit Counter mode. The block diagram of this mode is shown in Figure 23-1. When the RTC is enabled, the counter will increment on every 0-to-1 transition of CLK_RTC_CNT. The counter will increment until it reaches the top value of 0xFFFFFFFF, and then wrap to 0x00000000. This sets the Overflow Interrupt flag in the Interrupt Flag Status and Clear register (INTFLAG.OVF).

The RTC counter value can be read from or written to the Counter Value register (COUNT) in 32-bit format. The COUNT register requires synchronization when reading. This is achieved by setting the CTRLA.COUNTSYNC bit and waiting for the SYNCBUSY.COUNTSYNC to complete. Disabling the synchronization will prevent reading valid values from the COUNT register.

The counter value is continuously compared with the 32-bit Compare register (COMP0). When a compare match occurs, the Compare 0 Interrupt flag in the Interrupt Flag Status and Clear register (INTFLAG.CMP0) is set on the next 0-to-1 transition of CLK_RTC_CNT.

If the Clear on Match bit in the Control A register (CTRLA.MATCHCLR) is '1', the counter is cleared on the next counter cycle when a compare match with COMP0 occurs. This allows the RTC to generate periodic interrupts or events with longer periods than the prescaler events. Note that when CTRLA.MATCHCLR is '1', INTFLAG.CMP0 and INTFLAG.OVF will both be set simultaneously on a compare match with COMP0.

23.5.2.4 16-Bit Counter (Mode 1)

When the RTC Operating Mode bits in the Control A register (CTRLA.MODE) are written to 0x1, the counter operates in 16-bit Counter mode as shown in Figure 23-2. When the RTC is enabled, the counter will increment on every 0-to-1 transition of CLK_RTC_CNT. In 16-bit Counter mode, the 16-bit Period register (PER) holds the maximum value of the counter. The counter will increment until it reaches the PER value, and then wrap to 0x0000. This sets the Overflow Interrupt flag in the Interrupt Flag Status and Clear register (INTFLAG.OVF).

The RTC counter value can be read from or written to the Counter Value register (COUNT) in 16-bit format. The COUNT register requires synchronization when reading. This is achieved by setting the CTRLA.COUNTSYNC bit and waiting for the SYNCBUSY.COUNTSYNC to complete. Disabling the synchronization will prevent reading valid values from the COUNT register.

The counter value is continuously compared with the 16-bit Compare registers (COMPn, n=0..1). When a compare match occurs, the Compare n Interrupt flag in the Interrupt Flag Status and Clear register (INTFLAG.CMPn, n=0..1) is set on the next 0-to-1 transition of CLK_RTC_CNT.

23.5.2.5 Clock/Calendar (Mode 2)

When the RTC Operating Mode bits in the Control A register (CTRLA.MODE) are written to 0x2, the counter operates in Clock/Calendar mode, as shown in Figure 23-3. When the RTC is enabled, the counter will increment on every 0-to-1 transition of CLK_RTC_CNT. The selected clock source and RTC prescaler must be configured to provide a 1Hz clock to the counter for correct operation in this mode.

The time and date can be read from or written to the Clock Value register (CLOCK) in a 32-bit time/date format. The CLOCK register requires synchronization when reading. This is achieved by setting the CTRLA.COUNTSYNC bit and waiting for the SYNCBUSY.COUNTSYNC to complete. Disabling the synchronization will prevent reading valid values from the CLOCK register. Time is represented as:

- Seconds
- Minutes
- Hours

Hours can be represented in either 12- or 24-hour format, selected by the Clock Representation bit in the Control A register (CTRLA.CLKREP). This bit can be changed only while the RTC is disabled.

The date is represented in the following form:

- Day as the numeric day of the month (starting at 1)
- Month as the numeric month of the year (1 = January, 2 = February and so on)
- Year as a value from 0x00 to 0x3F. This value must be added to a user-defined reference year. The reference year must be a leap year (2016, 2020 and so on). For example, the year value 0x2D, added to a reference year 2016, represents the year 2061.

The RTC will increment until it reaches the top value of 23:59:59 December 31 of year value 0x3F, and then wrap to 00:00:00 January 1 of year value 0x00. This will set the Overflow Interrupt flag in the Interrupt Flag Status and Clear registers (INTFLAG.OVF).

The clock value is continuously compared with the 32-bit Alarm register (ALARM0). When an alarm match occurs, the Alarm 0 Interrupt flag in the Interrupt Flag Status and Clear registers (INTFLAG.ALARM0) is set on the next 0-to-1 transition of CLK_RTC_CNT. E.g. For a 1Hz clock counter, it means the Alarm 0 Interrupt flag is set with a delay of 1s after the occurrence of alarm match.

A valid alarm match depends on the setting of the Alarm Mask Selection bits in the Alarm 0 Mask register (MASK0.SEL). These bits determine which time/date fields of the clock and alarm values are valid for comparison and which are ignored.

If the Clear on Match bit in the Control A register (CTRLA.MATCHCLR) is set, the counter is cleared on the next counter cycle when an alarm match with ALARM0 occurs. This allows the RTC to generate periodic interrupts or events with longer periods than it would be possible with the prescaler events only (see 23.5.8.1 Periodic Intervals).
Note: When CTRLA.MATCHCLR is 1, INTFLAG.ALARM0 and INTFLAG.OVF will both be set simultaneously on an alarm match with ALARM0.

23.5.3 Clocks

The RTC bus clock (CLK_RTC_APB) can be enabled and disabled in the Main Clock module MCLK, and the default state of CLK_RTC_APB can be found in the Peripheral Clock Masking section.

A 32.768 kHz or 1.024 kHz oscillator clock (CLK_RTC_OSC) is required to clock the RTC. This clock must be configured and enabled in the 32.768 kHz oscillator controller (OSC32KCTRL) before using the RTC.

This oscillator clock is asynchronous to the bus clock (CLK_RTC_APB). Due to this asynchronicity, writing to certain registers will require synchronization between the clock domains. Refer to Synchronization for further details.

23.5.4 Interrupts

The RTC has the following interrupt sources:

- Overflow (OVF): Indicates that the counter has reached its top value and wrapped to zero.
- Compare (CMP0-1): Indicates a match between the counter value and the compare register.
- Alarm (ALARM0): Indicates a match between the clock value and the alarm register.
- Period n (PER0-7): The corresponding bit in the prescaler has toggled. Refer to 23.5.8.1 Periodic Intervals for details.

Each interrupt source has an interrupt flag associated with it. The interrupt flag in the Interrupt Flag Status and Clear (INTFLAG) register is set when the interrupt condition occurs. Each interrupt can be individually enabled by setting the corresponding bit in the Interrupt Enable Set register (INTENSET=1), and disabled by setting the corresponding bit in the Interrupt Enable Clear register (INTENCLR=1).

An interrupt request is generated when the interrupt flag is raised and the corresponding interrupt is enabled. The interrupt request remains active until either the interrupt flag is cleared, the interrupt is disabled or the RTC is reset. See the description of the INTFLAG registers for details on how to clear interrupt flags.

All interrupt requests from the peripheral are ORed together on system level to generate one combined interrupt request to the NVIC. Refer to the Nested Vector Interrupt Controller for details. The user must read the INTFLAG register to determine which interrupt condition is present.

Note: Interrupts must be globally enabled for interrupt requests to be generated. Refer to the Nested Vector Interrupt Controller for details.

23.5.5 Events

The RTC can generate the following output events:

- Overflow (OVF): Generated when the counter has reached its top value and wrapped to zero.
- Compare (CMP0-1): Indicates a match between the counter value and the compare register.
- Alarm (ALARM0): Indicates a match between the clock value and the alarm register.
- Period n (PER0-7): The corresponding bit in the prescaler has toggled. Refer to 23.5.8.1 Periodic Intervals for details.
- Periodic Daily (PERD): Generated when the COUNT/CLOCK has incremented at a fixed period of time.

Setting the Event Output bit in the Event Control Register (EVCTRL.xxxEO=1) enables the corresponding output event. Writing a zero to this bit disables the corresponding output event. Refer to the EVSYS - Event System for details on configuring the event system.

23.5.6 Sleep Mode Operation

The RTC will continue to operate in any sleep mode where the source clock is active. The RTC interrupts can be used to wake up the device from a sleep mode. RTC events can trigger other operations in the system without exiting the sleep mode.

An interrupt request will be generated after the wake-up if the Interrupt Controller is configured accordingly. Otherwise the CPU will wake up directly, without triggering any interrupt. In this case, the CPU will continue executing right from the first instruction that followed the entry into sleep.

The periodic events can also wake up the CPU through the interrupt function of the Event System. In this case, the event must be enabled and connected to an event channel with its interrupt enabled. See Event System for more information.

When the device is in STANDBY sleep mode the DMA is not able to write the COUNT register. To write the COUNT register with the DMA the device must be in Active mode or IDLE sleep mode.

23.5.7 Synchronization

Due to asynchronicity between the main clock domain and the peripheral clock domains, some registers need to be synchronized when written or read.

The following bits are synchronized when written:

- Software Reset bit in Control A register, CTRLA.SWRST
- Enable bit in Control A register, CTRLA.ENABLE
- Count Read Synchronization bit in Control A register (CTRLA.COUNTSYNC)
- Clock Read Synchronization bit in Control A register (CTRLA.CLOCKSYNC)

The following registers are synchronized when written:

- Counter Value register, COUNT
- Clock Value register, CLOCK
- Counter Period register, PER
- Compare n Value registers, COMPn
- Alarm n Value registers, ALARM0
- Frequency Correction register, FREQCORR
- Alarm n Mask register, MASK0
- The General Purpose n registers (GP0, GP1)

The following registers are synchronized when read:

- The Counter Value register, COUNT, if the Counter Read Sync Enable bit in CTRLA (CTRLA.COUNTSYNC) is '1'
- The Clock Value register, CLOCK, if the Clock Read Sync Enable bit in CTRLA (CTRLA.CLOCKSYNC) is '1'

Required write-synchronization is denoted by the "Write-Synchronized" property in the register description.

Required read-synchronization is denoted by the "Read-Synchronized" property in the register description.

23.5.8 Additional Features

23.5.8.1 Periodic Intervals

The RTC prescaler can generate interrupts and events at periodic intervals, allowing flexible system tick creation. Any of the upper eight bits of the prescaler (bits 2 to 9) can be the source of an interrupt/event. When one of the eight Periodic Event Output bits in the Event Control register (EVCTRL.PEREO[n=0..7]) is '1', an event is generated on the 0-to-1 transition of the related bit in the prescaler, resulting in a periodic event frequency of:

$$f_{PERIODIC(n)} = \frac{f_{CLK_RTC_OSC}}{2^{n+3}}$$

$f_{CLK_RTC_OSC}$ is the frequency of the internal prescaler clock CLK_RTC_OSC, and n is the position of the EVCTRL.PEREOx bit. For example, PER0 will generate an event every eight CLK_RTC_OSC cycles, PER1 every 16 cycles, etc. This is shown in the figure below.

Periodic events are independent of the prescaler setting used by the RTC counter, except if CTRLA.PRESCALER is zero. Then, no periodic events will be generated.

Figure 23-4. Example Periodic Events

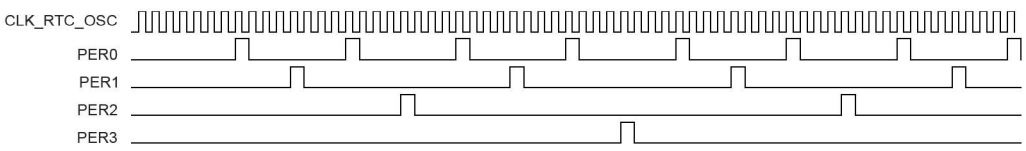

23.5.8.2 Frequency Correction

The RTC Frequency Correction module employs periodic counter corrections to compensate for a too-slow or too-fast oscillator. Frequency correction requires that CTRLA.PRESCALER is greater than 1.

The digital correction circuit adds or subtracts cycles from the RTC prescaler to adjust the frequency in approximately 1ppm steps. Digital correction is achieved by adding or skipping a single count in the prescaler once every 8192 CLK_RTC_OSC cycles. The Value bit group in the Frequency Correction register (FREQCORR.VALUE) determines the number of times the adjustment is applied over 128 of these periods. The resulting correction is as follows:

$$\text{Correction in ppm} = \frac{\text{FREQCORR.VALUE}}{8192 \cdot 128} \cdot 10^6 \text{ppm}$$

This results in a resolution of 0.95367 ppm.

The Sign bit in the Frequency Correction register (FREQCORR.SIGN) determines the direction of the correction. A positive value will add counts and increase the period (reducing the frequency), and a negative value will reduce the counts per period (speeding up the frequency).

Digital correction also affects the generation of the periodic events from the prescaler. When the correction is applied at the end of the correction cycle period, the interval between the previous periodic event and the next occurrence may also be shortened or lengthened depending on the correction value.

23.6 Register Summary - Mode 0 - 32-Bit Counter

Offset	Name	Bit Pos.	7	6	5	4	3	2	1	0
0x00	CTRLA	7:0	MATCHCLR				MODE[1:0]		ENABLE	SWRST
		15:8	COUNTSYNC				PRESCALER[3:0]			
0x02 ... 0x03	Reserved									
0x04	EVCTRL	7:0	PEREO7	PEREO6	PEREO5	PEREO4	PEREO3	PEREO2	PEREO1	PEREO0
		15:8	OVFEO							CMPEO0
		23:16								
		31:24								
0x08	INTENCLR	7:0	PER7	PER6	PER5	PER4	PER3	PER2	PER1	PER0
		15:8	OVF							CMP0
0x0A	INTENSET	7:0	PER7	PER6	PER5	PER4	PER3	PER2	PER1	PER0
		15:8	OVF							CMP0
0x0C	INTFLAG	7:0	PER7	PER6	PER5	PER4	PER3	PER2	PER1	PER0
		15:8	OVF							CMP0
0x0E	DBGCTRL	7:0								DBGRUN
0x0F	Reserved									
0x10	SYNCBUSY	7:0			COMP0		COUNT	FREQCORR	ENABLE	SWRST
		15:8	COUNTSYNC							
		23:16								
		31:24								
0x14	FREQCORR	7:0	SIGN	VALUE[6:0]						
0x15 ... 0x17	Reserved									
0x18	COUNT	7:0	COUNT[7:0]							
		15:8	COUNT[15:8]							
		23:16	COUNT[23:16]							
		31:24	COUNT[31:24]							
0x1C ... 0x1F	Reserved									
0x20	COMP	7:0	COMP[7:0]							
		15:8	COMP[15:8]							
		23:16	COMP[23:16]							
		31:24	COMP[31:24]							
0x24 ... 0x3F	Reserved									
0x40	GP0	7:0	GP[7:0]							
		15:8	GP[15:8]							
		23:16	GP[23:16]							
		31:24	GP[31:24]							
0x44	GP1	7:0	GP[7:0]							
		15:8	GP[15:8]							
		23:16	GP[23:16]							
		31:24	GP[31:24]							

23.6.1 Control A in COUNT32 mode (CTRLA.MODE=0)

Name: CTRLA
Offset: 0x00
Reset: 0x0000
Property: PAC Write-Protection, Enable-Protected, Write-Synchronized

Bit	15	14	13	12	11	10	9	8
	COUNTSYNC				PRESCALER[3:0]			
Access	R/W				R/W	R/W	R/W	R/W
Reset	0				0	0	0	0

Bit	7	6	5	4	3	2	1	0
	MATCHCLR				MODE[1:0]		ENABLE	SWRST
Access	R/W				R/W	R/W	R/W	R/W
Reset	0				0	0	0	0

Bit 15 – COUNTSYNC COUNT Read Synchronization Enable
The COUNT register requires synchronization when reading. Disabling the synchronization will prevent reading valid values from the COUNT register.
This bit is not enable-protected.

Value	Description
0	COUNT read synchronization is disabled
1	COUNT read synchronization is enabled

Bits 11:8 – PRESCALER[3:0] Prescaler
These bits define the prescaling factor for the RTC clock source (GCLK_RTC) to generate the counter clock (CLK_RTC_CNT). Periodic events and interrupts are not available when the prescaler is off. These bits are not synchronized.

Value	Name	Description
0x0	OFF	CLK_RTC_CNT = GCLK_RTC/1
0x1	DIV1	CLK_RTC_CNT = GCLK_RTC/1
0x2	DIV2	CLK_RTC_CNT = GCLK_RTC/2
0x3	DIV4	CLK_RTC_CNT = GCLK_RTC/4
0x4	DIV8	CLK_RTC_CNT = GCLK_RTC/8
0x5	DIV16	CLK_RTC_CNT = GCLK_RTC/16
0x6	DIV32	CLK_RTC_CNT = GCLK_RTC/32
0x7	DIV64	CLK_RTC_CNT = GCLK_RTC/64
0x8	DIV128	CLK_RTC_CNT = GCLK_RTC/128
0x9	DIV256	CLK_RTC_CNT = GCLK_RTC/256
0xA	DIV512	CLK_RTC_CNT = GCLK_RTC/512
0xB	DIV1024	CLK_RTC_CNT = GCLK_RTC/1024
0xC-0xF	-	Reserved

Bit 7 – MATCHCLR Clear on Match
This bit defines if the counter is cleared or not on a match.
This bit is not synchronized.

Value	Description
0	The counter is not cleared on a Compare/Alarm 0 match
1	The counter is cleared on a Compare/Alarm 0 match

Bits 3:2 – MODE[1:0] Operating Mode
This bit group defines the operating mode of the RTC.
This bit is not synchronized.

Value	Name	Description
0x0	COUNT32	Mode 0: 32-bit counter

Value	Name	Description
0x1	COUNT16	Mode 1: 16-bit counter
0x2	CLOCK	Mode 2: Clock/calendar
0x3	-	Reserved

Bit 1 – ENABLE Enable
Due to synchronization there is a delay between writing CTRLA.ENABLE and until the peripheral is enabled/disabled. The value written to CTRLA.ENABLE will read back immediately and the Enable bit in the Synchronization Busy register (SYNCBUSY.ENABLE) will be set. SYNCBUSY.ENABLE will be cleared when the operation is complete.

Value	Description
0	The peripheral is disabled
1	The peripheral is enabled

Bit 0 – SWRST Software Reset
Writing a '0' to this bit has no effect.
Writing a '1' to this bit resets all registers in the RTC (except DBGCTRL) to their initial state, and the RTC will be disabled.
Writing a '1' to CTRLA.SWRST will always take precedence, meaning that all other writes in the same write-operation will be discarded.
Due to synchronization there is a delay between writing CTRLA.SWRST and until the reset is complete. CTRLA.SWRST will be cleared when the reset is complete.

Value	Description
0	There is not reset operation ongoing
1	The reset operation is ongoing

23.6.2 Event Control in COUNT32 mode (CTRLA.MODE=0)

Name: EVCTRL
Offset: 0x04
Reset: 0x00000000
Property: PAC Write-Protection, Enable-Protected

Bit	31	30	29	28	27	26	25	24
Access								
Reset								

Bit	23	22	21	20	19	18	17	16
Access								
Reset								

Bit	15	14	13	12	11	10	9	8
	OVFEO							CMPEO0
Access	R/W							R/W
Reset	0							0

Bit	7	6	5	4	3	2	1	0
	PEREO7	PEREO6	PEREO5	PEREO4	PEREO3	PEREO2	PEREO1	PEREO0
Access	R/W	R/W	R/W	R/W	R/W	R/W	R/W	R/W
Reset	0	0	0	0	0	0	0	0

Bit 15 – OVFEO Overflow Event Output Enable

Value	Description
0	Overflow event is disabled and will not be generated.
1	Overflow event is enabled and will be generated for every overflow.

Bit 8 – CMPEO0 Compare 0 Event Output Enable

Value	Description
0	Compare 0 event is disabled and will not be generated.
1	Compare 0 event is enabled and will be generated for every compare match.

Bits 0, 1, 2, 3, 4, 5, 6, 7 – PEREOx Periodic Interval n Event Output Enable [x = 7..0]

Value	Description
0	Periodic Interval x event is disabled and will not be generated.
1	Periodic Interval x event is enabled and will be generated.

23.6.3 Interrupt Enable Clear in COUNT32 mode (CTRLA.MODE=0)

Name: INTENCLR
Offset: 0x08
Reset: 0x0000
Property: PAC Write-Protection

This register allows the user to disable an interrupt without doing a read-modify-write operation. Changes in this register will also be reflected in the Interrupt Enable Set (INTENSET) register.

Bit	15	14	13	12	11	10	9	8
	OVF							CMP0
Access	R/W							R/W
Reset	0							0

Bit	7	6	5	4	3	2	1	0
	PER7	PER6	PER5	PER4	PER3	PER2	PER1	PER0
Access	R/W	R/W	R/W	R/W	R/W	R/W	R/W	R/W
Reset	0	0	0	0	0	0	0	0

Bit 15 – OVF Overflow Interrupt Enable
Writing a '0' to this bit has no effect.
Writing a '1' to this bit will clear the Overflow Interrupt Enable bit, which disables the Overflow interrupt.

Value	Description
0	The Overflow interrupt is disabled.
1	The Overflow interrupt is enabled.

Bit 8 – CMP0 Compare 0 Interrupt Enable
Writing a '0' to this bit has no effect.
Writing a '1' to this bit will clear the Compare 0 Interrupt Enable bit, which disables the Compare 0 interrupt.

Value	Description
0	The Compare 0 interrupt is disabled.
1	The Compare 0 interrupt is enabled.

Bits 0, 1, 2, 3, 4, 5, 6, 7 – PERx Periodic Interval n Interrupt Enable [x = 7..0]
Writing a '0' to this bit has no effect.
Writing a '1' to this bit will clear the Periodic Interval x Interrupt Enable bit, which disables the Periodic Interval n interrupt.

Value	Description
0	Periodic Interval x interrupt is disabled.
1	Periodic Interval x interrupt is enabled.

23.6.4 Interrupt Enable Set in COUNT32 mode (CTRLA.MODE=0)

Name: INTENSET
Offset: 0x0A
Reset: 0x0000
Property: PAC Write-Protection

This register allows the user to enable an interrupt without doing a read-modify-write operation. Changes in this register will also be reflected in the Interrupt Enable Clear (INTENCLR) register.

Bit	15	14	13	12	11	10	9	8
	OVF							CMP0
Access	R/W							R/W
Reset	0							0

Bit	7	6	5	4	3	2	1	0
	PER7	PER6	PER5	PER4	PER3	PER2	PER1	PER0
Access	R/W	R/W	R/W	R/W	R/W	R/W	R/W	R/W
Reset	0	0	0	0	0	0	0	0

Bit 15 – OVF Overflow Interrupt Enable
Writing a '0' to this bit has no effect.
Writing a '1' to this bit will set the Overflow Interrupt Enable bit, which enables the Overflow interrupt.

Value	Description
0	The Overflow interrupt is disabled.
1	The Overflow interrupt is enabled.

Bit 8 – CMP0 Compare 0 Interrupt Enable
Writing a '0' to this bit has no effect.
Writing a '1' to this bit will set the Compare 0 Interrupt Enable bit, which enables the Compare 0 interrupt.

Value	Description
0	The Compare 0 interrupt is disabled.
1	The Compare 0 interrupt is enabled.

Bits 0, 1, 2, 3, 4, 5, 6, 7 – PERx Periodic Interval n Interrupt Enable [x = 7..0]
Writing a '0' to this bit has no effect.
Writing a '1' to this bit will set the Periodic Interval n Interrupt Enable bit, which enables the Periodic Interval x interrupt.

Value	Description
0	Periodic Interval x interrupt is disabled.
1	Periodic Interval x interrupt is enabled.

23.6.5 Interrupt Flag Status and Clear in COUNT32 mode (CTRLA.MODE=0)

Name: INTFLAG
Offset: 0x0C
Reset: 0x0000
Property: -

Bit	15	14	13	12	11	10	9	8
	OVF							CMP0
Access	R/W							R/W
Reset	0							0

Bit	7	6	5	4	3	2	1	0
	PER7	PER6	PER5	PER4	PER3	PER2	PER1	PER0
Access	R/W	R/W	R/W	R/W	R/W	R/W	R/W	R/W
Reset	0	0	0	0	0	0	0	0

Bit 15 – OVF Overflow
This flag is cleared by writing a '1' to the flag.
This flag is set on the next CLK_RTC_CNT cycle after an overflow condition occurs, and an interrupt request will be generated if INTENCLR/SET.OVF is '1'.
Writing a '0' to this bit has no effect.
Writing a '1' to this bit clears the Overflow interrupt flag.

Bit 8 – CMP0 Compare 0
This flag is cleared by writing a '1' to the flag.
This flag is set on the next CLK_RTC_CNT cycle after a match with the compare condition, and an interrupt request will be generated if INTENCLR/SET.COMP0 is one.
Writing a '0' to this bit has no effect.
Writing a '1' to this bit clears the Compare 0 interrupt flag.

Bits 0, 1, 2, 3, 4, 5, 6, 7 – PERx Periodic Interval x [x = 7..0]
This flag is cleared by writing a '1' to the flag.
This flag is set on the 0-to-1 transition of prescaler bit [x+2], and an interrupt request will be generated if INTENCLR/SET.PERx is one.
Writing a '0' to this bit has no effect.
Writing a '1' to this bit clears the Periodic Interval x interrupt flag.

23.6.6 Debug Control

Name: DBGCTRL
Offset: 0x0E
Reset: 0x00
Property: PAC Write-Protection

Bit	7	6	5	4	3	2	1	0
								DBGRUN
Access								R/W
Reset								0

Bit 0 – DBGRUN Debug Run
This bit is not reset by a software reset.
This bit controls the functionality when the CPU is halted by an external debugger.

Value	Description
0	The RTC is halted when the CPU is halted by an external debugger.
1	The RTC continues normal operation when the CPU is halted by an external debugger.

23.6.7 Synchronization Busy in COUNT32 mode (CTRLA.MODE=0)

Name: SYNCBUSY
Offset: 0x10
Reset: 0x00000000
Property: -

Bit	31	30	29	28	27	26	25	24
Access								
Reset								

Bit	23	22	21	20	19	18	17	16
Access								
Reset								

Bit	15	14	13	12	11	10	9	8
	COUNTSYNC							
Access	R							
Reset	0							

Bit	7	6	5	4	3	2	1	0
			COMP0		COUNT	FREQCORR	ENABLE	SWRST
Access			R		R	R	R	R
Reset			0		0	0	0	0

Bit 15 – COUNTSYNC Count Read Sync Enable Synchronization Busy Status

Value	Description
0	Write synchronization for CTRLA.COUNTSYNC bit is complete.
1	Write synchronization for CTRLA.COUNTSYNC bit is ongoing.

Bit 5 – COMP0 Compare 0 Synchronization Busy Status

Value	Description
0	Write synchronization for COMP0 register is complete.
1	Write synchronization for COMP0 register is ongoing.

Bit 3 – COUNT Count Value Synchronization Busy Status

Value	Description
0	Read/write synchronization for COUNT register is complete.
1	Read/write synchronization for COUNT register is ongoing.

Bit 2 – FREQCORR Frequency Correction Synchronization Busy Status

Value	Description
0	Write synchronization for FREQCORR register is complete.
1	Write synchronization for FREQCORR register is ongoing.

Bit 1 – ENABLE Enable Synchronization Busy Status

Value	Description
0	Write synchronization for CTRLA.ENABLE bit is complete.
1	Write synchronization for CTRLA.ENABLE bit is ongoing.

Bit 0 – SWRST Software Reset Synchronization Busy Status

Value	Description
0	Write synchronization for CTRLA.SWRST bit is complete.

Value	Description
1	Write synchronization for CTRLA.SWRST bit is ongoing.

23.6.8 Frequency Correction

Name: FREQCORR
Offset: 0x14
Reset: 0x00
Property: PAC Write-Protection, Write-Synchronized

Bit	7	6	5	4	3	2	1	0
	SIGN	VALUE[6:0]						
Access	R/W	R/W	R/W	R/W	R/W	R/W	R/W	R/W
Reset	0	0	0	0	0	0	0	0

Bit 7 – SIGN Correction Sign

Value	Description
0	The correction value is positive, i.e., frequency will be decreased.
1	The correction value is negative, i.e., frequency will be increased.

Bits 6:0 – VALUE[6:0] Correction Value
These bits define the amount of correction applied to the RTC prescaler.

Value	Description
0	Correction is disabled and the RTC frequency is unchanged.
1 - 127	The RTC frequency is adjusted according to the value.

23.6.9 Counter Value in COUNT32 mode (CTRLA.MODE=0)

Name: COUNT
Offset: 0x18
Reset: 0x00000000
Property: PAC Write-Protection, Write-Synchronized, Read-Synchronized

Bit	31	30	29	28	27	26	25	24
	COUNT[31:24]							
Access	R/W	R/W	R/W	R/W	R/W	R/W	R/W	R/W
Reset	0	0	0	0	0	0	0	0

Bit	23	22	21	20	19	18	17	16
	COUNT[23:16]							
Access	R/W	R/W	R/W	R/W	R/W	R/W	R/W	R/W
Reset	0	0	0	0	0	0	0	0

Bit	15	14	13	12	11	10	9	8
	COUNT[15:8]							
Access	R/W	R/W	R/W	R/W	R/W	R/W	R/W	R/W
Reset	0	0	0	0	0	0	0	0

Bit	7	6	5	4	3	2	1	0
	COUNT[7:0]							
Access	R/W	R/W	R/W	R/W	R/W	R/W	R/W	R/W
Reset	0	0	0	0	0	0	0	0

Bits 31:0 – COUNT[31:0] Counter Value
These bits define the value of the 32-bit RTC counter in mode 0. This register must be written with a 32-bit write access.

23.6.10 Compare 0 Value in COUNT32 mode (CTRLA.MODE=0)

Name: COMP
Offset: 0x20
Reset: 0x00000000
Property: PAC Write-Protection, Write-Synchronized

Bit	31	30	29	28	27	26	25	24
	COMP[31:24]							
Access	R/W	R/W	R/W	R/W	R/W	R/W	R/W	R/W
Reset	0	0	0	0	0	0	0	0

Bit	23	22	21	20	19	18	17	16
	COMP[23:16]							
Access	R/W	R/W	R/W	R/W	R/W	R/W	R/W	R/W
Reset	0	0	0	0	0	0	0	0

Bit	15	14	13	12	11	10	9	8
	COMP[15:8]							
Access	R/W	R/W	R/W	R/W	R/W	R/W	R/W	R/W
Reset	0	0	0	0	0	0	0	0

Bit	7	6	5	4	3	2	1	0
	COMP[7:0]							
Access	R/W	R/W	R/W	R/W	R/W	R/W	R/W	R/W
Reset	0	0	0	0	0	0	0	0

Bits 31:0 – COMP[31:0] Compare Value
The 32-bit value of COMP0 is continuously compared with the 32-bit COUNT value. When a match occurs, the Compare 0 interrupt flag in the Interrupt Flag Status and Clear register (INTFLAG.CMP0) is set on the next counter cycle, and the counter value is cleared if CTRLA.MATCHCLR is '1'.

23.6.11 General Purpose n

Name: GPn
Offset: 0x40 + n*0x04 [n=0..1]
Reset: 0x00000000
Property: -

Bit	31	30	29	28	27	26	25	24
	GP[31:24]							
Access	R/W	R/W	R/W	R/W	R/W	R/W	R/W	R/W
Reset	0	0	0	0	0	0	0	0

Bit	23	22	21	20	19	18	17	16
	GP[23:16]							
Access	R/W	R/W	R/W	R/W	R/W	R/W	R/W	R/W
Reset	0	0	0	0	0	0	0	0

Bit	15	14	13	12	11	10	9	8
	GP[15:8]							
Access	R/W	R/W	R/W	R/W	R/W	R/W	R/W	R/W
Reset	0	0	0	0	0	0	0	0

Bit	7	6	5	4	3	2	1	0
	GP[7:0]							
Access	R/W	R/W	R/W	R/W	R/W	R/W	R/W	R/W
Reset	0	0	0	0	0	0	0	0

Bits 31:0 – GP[31:0] General Purpose
These bits are for user-defined general purpose use.

23.7 Register Summary - Mode 1 - 16-Bit Counter

Offset	Name	Bit Pos.	7	6	5	4	3	2	1	0
0x00	CTRLA	7:0					MODE[1:0]		ENABLE	SWRST
		15:8	COUNTSYNC				PRESCALER[3:0]			
0x02 ... 0x03	Reserved									
0x04	EVCTRL	7:0	PEREO7	PEREO6	PEREO5	PEREO4	PEREO3	PEREO2	PEREO1	PEREO0
		15:8	OVFEO						CMPEO1	CMPEO0
		23:16								
		31:24								
0x08	INTENCLR	7:0	PER7	PER6	PER5	PER4	PER3	PER2	PER1	PER0
		15:8	OVF						CMP1	CMP0
0x0A	INTENSET	7:0	PER7	PER6	PER5	PER4	PER3	PER2	PER1	PER0
		15:8	OVF						CMP1	CMP0
0x0C	INTFLAG	7:0	PER7	PER6	PER5	PER4	PER3	PER2	PER1	PER0
		15:8	OVF						CMP1	CMP0
0x0E	DBGCTRL	7:0								DBGRUN
0x0F	Reserved									
0x10	SYNCBUSY	7:0		COMP1	COMP0	PER	COUNT	FREQCORR	ENABLE	SWRST
		15:8	COUNTSYNC							
		23:16							GP1	GP0
		31:24								
0x14	FREQCORR	7:0	SIGN	VALUE[6:0]						
0x15 ... 0x17	Reserved									
0x18	COUNT	7:0	COUNT[7:0]							
		15:8	COUNT[15:8]							
0x1A ... 0x1B	Reserved									
0x1C	PER	7:0	PER[7:0]							
		15:8	PER[15:8]							
0x1E ... 0x1F	Reserved									
0x20	COMP0	7:0	COMP[7:0]							
		15:8	COMP[15:8]							
0x22	COMP1	7:0	COMP[7:0]							
		15:8	COMP[15:8]							
0x24 ... 0x3F	Reserved									
0x40	GP0	7:0	GP[7:0]							
		15:8	GP[15:8]							
		23:16	GP[23:16]							
		31:24	GP[31:24]							
0x44	GP1	7:0	GP[7:0]							
		15:8	GP[15:8]							
		23:16	GP[23:16]							
		31:24	GP[31:24]							

23.7.1 Control A in COUNT16 mode (CTRLA.MODE=1)

Name: CTRLA
Offset: 0x00
Reset: 0x0000
Property: PAC Write-Protection, Enable-Protected, Write-Synchronized

Bit	15	14	13	12	11	10	9	8
	COUNTSYNC				PRESCALER[3:0]			
Access	R/W				R/W	R/W	R/W	R/W
Reset	0				0	0	0	0

Bit	7	6	5	4	3	2	1	0
					MODE[1:0]		ENABLE	SWRST
Access					R/W	R/W	R/W	R/W
Reset					0	0	0	0

Bit 15 – COUNTSYNC COUNT Read Synchronization Enable
The COUNT register requires synchronization when reading. Disabling the synchronization will prevent reading valid values from the COUNT register.
This bit is not enable-protected.

Value	Description
0	COUNT read synchronization is disabled
1	COUNT read synchronization is enabled

Bits 11:8 – PRESCALER[3:0] Prescaler
These bits define the prescaling factor for the RTC clock source (GCLK_RTC) to generate the counter clock (CLK_RTC_CNT). Periodic events and interrupts are not available when the prescaler is off. These bits are not synchronized.

Value	Name	Description
0x0	OFF	CLK_RTC_CNT = GCLK_RTC/1
0x1	DIV1	CLK_RTC_CNT = GCLK_RTC/1
0x2	DIV2	CLK_RTC_CNT = GCLK_RTC/2
0x3	DIV4	CLK_RTC_CNT = GCLK_RTC/4
0x4	DIV8	CLK_RTC_CNT = GCLK_RTC/8
0x5	DIV16	CLK_RTC_CNT = GCLK_RTC/16
0x6	DIV32	CLK_RTC_CNT = GCLK_RTC/32
0x7	DIV64	CLK_RTC_CNT = GCLK_RTC/64
0x8	DIV128	CLK_RTC_CNT = GCLK_RTC/128
0x9	DIV256	CLK_RTC_CNT = GCLK_RTC/256
0xA	DIV512	CLK_RTC_CNT = GCLK_RTC/512
0xB	DIV1024	CLK_RTC_CNT = GCLK_RTC/1024
0xC-0xF	-	Reserved

Bits 3:2 – MODE[1:0] Operating Mode
This field defines the operating mode of the RTC. This bit is not synchronized.

Value	Name	Description
0x0	COUNT32	Mode 0: 32-bit counter
0x1	COUNT16	Mode 1: 16-bit counter
0x2	CLOCK	Mode 2: Clock/calendar
0x3	-	Reserved

Bit 1 – ENABLE Enable
Due to synchronization there is delay from writing CTRLA.ENABLE until the peripheral is enabled/disabled. The value written to CTRLA.ENABLE will read back immediately and the Enable bit in the Synchronization Busy register (SYNCBUSY.ENABLE) will be set. SYNCBUSY.ENABLE will be cleared when the operation is complete.

Value	Description
0	The peripheral is disabled
1	The peripheral is enabled

Bit 0 – SWRST Software Reset
Writing a '0' to this bit has no effect.
Writing a '1' to this bit resets all registers in the RTC (except DBGCTRL) to their initial state, and the RTC will be disabled.
Writing a '1' to CTRLA.SWRST will always take precedence, meaning that all other writes in the same write-operation will be discarded.
Due to synchronization there is a delay from writing CTRLA.SWRST until the reset is complete. CTRLA.SWRST will be cleared when the reset is complete.

Value	Description
0	There is not reset operation ongoing
1	The reset operation is ongoing

23.7.2 Event Control in COUNT16 mode (CTRLA.MODE=1)

Name: EVCTRL
Offset: 0x04
Reset: 0x00000000
Property: PAC Write-Protection, Enable-Protected

Bit	31	30	29	28	27	26	25	24
Access								
Reset								

Bit	23	22	21	20	19	18	17	16
Access								
Reset								

Bit	15	14	13	12	11	10	9	8
	OVFEO						CMPEO1	CMPEO0
Access	R/W						R/W	R/W
Reset	0						0	0

Bit	7	6	5	4	3	2	1	0
	PEREO7	PEREO6	PEREO5	PEREO4	PEREO3	PEREO2	PEREO1	PEREO0
Access	R/W	R/W	R/W	R/W	R/W	R/W	R/W	R/W
Reset	0	0	0	0	0	0	0	0

Bit 15 – OVFEO Overflow Event Output Enable

Value	Description
0	Overflow event is disabled and will not be generated.
1	Overflow event is enabled and will be generated for every overflow.

Bits 8, 9 – CMPEOx Compare x Event Output Enable [x = 1..0]

Value	Description
0	Compare x event is disabled and will not be generated.
1	Compare x event is enabled and will be generated for every compare match.

Bits 0, 1, 2, 3, 4, 5, 6, 7 – PEREOx Periodic Interval x Event Output Enable [x = 7..0]

Value	Description
0	Periodic Interval x event is disabled and will not be generated.
1	Periodic Interval x event is enabled and will be generated.

23.7.3 Interrupt Enable Clear in COUNT16 mode (CTRLA.MODE=1)

Name: INTENCLR
Offset: 0x08
Reset: 0x0000
Property: PAC Write-Protection

This register allows the user to disable an interrupt without doing a read-modify-write operation. Changes in this register will also be reflected in the Interrupt Enable Set (INTENSET) register.

Bit	15	14	13	12	11	10	9	8
	OVF						CMP1	CMP0
Access	R/W						R/W	R/W
Reset	0						0	0

Bit	7	6	5	4	3	2	1	0
	PER7	PER6	PER5	PER4	PER3	PER2	PER1	PER0
Access	R/W	R/W	R/W	R/W	R/W	R/W	R/W	R/W
Reset	0	0	0	0	0	0	0	0

Bit 15 – OVF Overflow Interrupt Enable
Writing a '0' to this bit has no effect. Writing a '1' to this bit will clear the Overflow Interrupt Enable bit, which disables the Overflow interrupt.

Value	Description
0	The Overflow interrupt is disabled.
1	The Overflow interrupt is enabled.

Bits 8, 9 – CMPx Compare x Interrupt Enable [x = 1..0]
Writing a '0' to this bit has no effect. Writing a '1' to this bit will clear the Compare x Interrupt Enable bit, which disables the Compare x interrupt.

Value	Description
0	The Compare x interrupt is disabled.
1	The Compare x interrupt is enabled.

Bits 0, 1, 2, 3, 4, 5, 6, 7 – PERx Periodic Interval x Interrupt Enable [x = 7..0]
Writing a '0' to this bit has no effect. Writing a '1' to this bit will clear the Periodic Interval x Interrupt Enable bit, which disables the Periodic Interval x interrupt.

Value	Description
0	Periodic Interval x interrupt is disabled.
1	Periodic Interval x interrupt is enabled.

23.7.4 Interrupt Enable Set in COUNT16 mode (CTRLA.MODE=1)

Name: INTENSET
Offset: 0x0A
Reset: 0x0000
Property: PAC Write-Protection

This register allows the user to enable an interrupt without doing a read-modify-write operation. Changes in this register will also be reflected in the Interrupt Enable Clear (INTENCLR) register.

Bit	15	14	13	12	11	10	9	8
	OVF						CMP1	CMP0
Access	R/W						R/W	R/W
Reset	0						0	0

Bit	7	6	5	4	3	2	1	0
	PER7	PER6	PER5	PER4	PER3	PER2	PER1	PER0
Access	R/W	R/W	R/W	R/W	R/W	R/W	R/W	R/W
Reset	0	0	0	0	0	0	0	0

Bit 15 – OVF Overflow Interrupt Enable
Writing a '0' to this bit has no effect. Writing a '1' to this bit will set the Overflow Interrupt Enable bit, which enables the Overflow interrupt.

Value	Description
0	The Overflow interrupt is disabled.
1	The Overflow interrupt is enabled.

Bits 8, 9 – CMPx Compare x Interrupt Enable [x = 1..0]
Writing a '0' to this bit has no effect. Writing a '1' to this bit will set the Compare x Interrupt Enable bit, which and enables the Compare x interrupt.

Value	Description
0	The Compare x interrupt is disabled.
1	The Compare x interrupt is enabled.

Bits 0, 1, 2, 3, 4, 5, 6, 7 – PERx Periodic Interval x Interrupt Enable [x = 7..0]
Writing a '0' to this bit has no effect. Writing a '1' to this bit will set the Periodic Interval x Interrupt Enable bit, which enables the Periodic Interval x interrupt.

Value	Description
0	Periodic Interval x interrupt is disabled.
1	Periodic Interval x interrupt is enabled.

23.7.5 Interrupt Flag Status and Clear in COUNT16 mode (CTRLA.MODE=1)

Name: INTFLAG
Offset: 0x0C
Reset: 0x0000
Property: -

Bit	15	14	13	12	11	10	9	8
	OVF						CMP1	CMP0
Access	R/W						R/W	R/W
Reset	0						0	0

Bit	7	6	5	4	3	2	1	0
	PER7	PER6	PER5	PER4	PER3	PER2	PER1	PER0
Access	R/W	R/W	R/W	R/W	R/W	R/W	R/W	R/W
Reset	0	0	0	0	0	0	0	0

Bit 15 – OVF Overflow
This flag is cleared by writing a '1' to the flag.
This flag is set on the next CLK_RTC_CNT cycle after an overflow condition occurs, and an interrupt request will be generated if INTENCLR/SET.OVF is '1'.
Writing a '0' to this bit has no effect.
Writing a '1' to this bit clears the Overflow interrupt flag.

Bits 8, 9 – CMPx Compare x [x = 1..0]
This flag is cleared by writing a '1' to the flag.
This flag is set on the next CLK_RTC_CNT cycle after a match with the compare condition, and an interrupt request will be generated if INTENCLR/SET.COMPx is one.
Writing a '0' to this bit has no effect.
Writing a '1' to this bit clears the Compare x interrupt flag.

Bits 0, 1, 2, 3, 4, 5, 6, 7 – PERx Periodic Interval x [x = 7..0]
This flag is cleared by writing a '1' to the flag.
This flag is set on the 0-to-1 transition of prescaler bit [x+2], and an interrupt request will be generated if INTENCLR/SET.PERx is one.
Writing a '0' to this bit has no effect.
Writing a '1' to this bit clears the Periodic Interval x interrupt flag.

23.7.6 Debug Control

Name: DBGCTRL
Offset: 0x0E
Reset: 0x00
Property: PAC Write-Protection

Bit	7	6	5	4	3	2	1	0
								DBGRUN
Access								R/W
Reset								0

Bit 0 – DBGRUN Debug Run
This bit is not reset by a software reset.
This bit controls the functionality when the CPU is halted by an external debugger.

Value	Description
0	The RTC is halted when the CPU is halted by an external debugger.
1	The RTC continues normal operation when the CPU is halted by an external debugger.

23.7.7 Synchronization Busy in COUNT16 mode (CTRLA.MODE=1)

Name: SYNCBUSY
Offset: 0x10
Reset: 0x00000000
Property: -

Bit	31	30	29	28	27	26	25	24
Access								
Reset								

Bit	23	22	21	20	19	18	17	16
							GP1	GP0
Access							R/W	R/W
Reset							0	0

Bit	15	14	13	12	11	10	9	8
	COUNTSYNC							
Access	R							
Reset	0							

Bit	7	6	5	4	3	2	1	0
		COMP1	COMP0	PER	COUNT	FREQCORR	ENABLE	SWRST
Access		R/W	R/W	R	R	R	R	R
Reset		0	0	0	0	0	0	0

Bits 16, 17 – GPn General Purpose n
These bits are for user-defined general purpose use.

Bit 15 – COUNTSYNC Count Read Sync Enable Synchronization Busy Status

Value	Description
0	Write synchronization for CTRLA.COUNTSYNC bit is complete.
1	Write synchronization for CTRLA.COUNTSYNC bit is ongoing.

Bits 5, 6 – COMPx Compare x Synchronization Busy Status [x = 1..0]

Value	Description
0	Write synchronization for COMPx register is complete.
1	Write synchronization for COMPx register is ongoing.

Bit 4 – PER Period Synchronization Busy Status

Value	Description
0	Write synchronization for PER register is complete.
1	Write synchronization for PER register is ongoing.

Bit 3 – COUNT Count Value Synchronization Busy Status

Value	Description
0	Read/write synchronization for COUNT register is complete.
1	Read/write synchronization for COUNT register is ongoing.

Bit 2 – FREQCORR Frequency Correction Synchronization Busy Status

Value	Description
0	Write synchronization for FREQCORR register is complete.
1	Write synchronization for FREQCORR register is ongoing.

Bit 1 – ENABLE Enable Synchronization Busy Status

Value	Description
0	Write synchronization for CTRLA.ENABLE bit is complete.
1	Write synchronization for CTRLA.ENABLE bit is ongoing.

Bit 0 – SWRST Software Reset Synchronization Busy Status

Value	Description
0	Write synchronization for CTRLA.SWRST bit is complete.
1	Write synchronization for CTRLA.SWRST bit is ongoing.

23.7.8 Frequency Correction

Name: FREQCORR
Offset: 0x14
Reset: 0x00
Property: PAC Write-Protection, Write-Synchronized

Bit	7	6	5	4	3	2	1	0
	SIGN	VALUE[6:0]						
Access	R/W	R/W	R/W	R/W	R/W	R/W	R/W	R/W
Reset	0	0	0	0	0	0	0	0

Bit 7 – SIGN Correction Sign

Value	Description
0	The correction value is positive, i.e., frequency will be decreased.
1	The correction value is negative, i.e., frequency will be increased.

Bits 6:0 – VALUE[6:0] Correction Value
These bits define the amount of correction applied to the RTC prescaler.

Value	Description
0	Correction is disabled and the RTC frequency is unchanged.
1 - 127	The RTC frequency is adjusted according to the value.

23.7.9 Counter Value in COUNT16 mode (CTRLA.MODE=1)

Name: COUNT
Offset: 0x18
Reset: 0x0000
Property: PAC Write-Protection, Write-Synchronized, Read-Synchronized

Bit	15	14	13	12	11	10	9	8
	COUNT[15:8]							
Access	R/W	R/W	R/W	R/W	R/W	R/W	R/W	R/W
Reset	0	0	0	0	0	0	0	0

Bit	7	6	5	4	3	2	1	0
	COUNT[7:0]							
Access	R/W	R/W	R/W	R/W	R/W	R/W	R/W	R/W
Reset	0	0	0	0	0	0	0	0

Bits 15:0 – COUNT[15:0] Counter Value
These bits define the value of the 16-bit RTC counter in COUNT16 mode (CTRLA.MODE=1). This register must be written with a 16-bit write access.

23.7.10 Counter Period in COUNT16 mode (CTRLA.MODE=1)

Name: PER
Offset: 0x1C
Reset: 0x0000
Property: PAC Write-Protection, Write-Synchronized

Bit	15	14	13	12	11	10	9	8
	PER[15:8]							
Access	R/W	R/W	R/W	R/W	R/W	R/W	R/W	R/W
Reset	0	0	0	0	0	0	0	0

Bit	7	6	5	4	3	2	1	0
	PER[7:0]							
Access	R/W	R/W	R/W	R/W	R/W	R/W	R/W	R/W
Reset	0	0	0	0	0	0	0	0

Bits 15:0 – PER[15:0] Counter Period
These bits define the value of the 16-bit RTC period in COUNT16 mode (CTRLA.MODE=1).

23.7.11 Compare n Value in COUNT16 mode (CTRLA.MODE=1)

Name: COMP
Offset: 0x20 + n*0x02 [n=0..1]
Reset: 0x0000
Property: PAC Write-Protection, Write-Synchronized

Bit	15	14	13	12	11	10	9	8
	COMP[15:8]							
Access	R/W	R/W	R/W	R/W	R/W	R/W	R/W	R/W
Reset	0	0	0	0	0	0	0	0

Bit	7	6	5	4	3	2	1	0
	COMP[7:0]							
Access	R/W	R/W	R/W	R/W	R/W	R/W	R/W	R/W
Reset	0	0	0	0	0	0	0	0

Bits 15:0 – COMP[15:0] Compare Value
The 16-bit value of COMPn is continuously compared with the 16-bit COUNT value. When a match occurs, the Compare n interrupt flag in the Interrupt Flag Status and Clear register (INTFLAG.CMPn) is set on the next counter cycle.

23.7.12 General Purpose n

Name: GPn
Offset: 0x40 + n*0x04 [n=0..1]
Reset: 0x00000000
Property: -

Bit	31	30	29	28	27	26	25	24
	GP[31:24]							
Access	R/W	R/W	R/W	R/W	R/W	R/W	R/W	R/W
Reset	0	0	0	0	0	0	0	0

Bit	23	22	21	20	19	18	17	16
	GP[23:16]							
Access	R/W	R/W	R/W	R/W	R/W	R/W	R/W	R/W
Reset	0	0	0	0	0	0	0	0

Bit	15	14	13	12	11	10	9	8
	GP[15:8]							
Access	R/W	R/W	R/W	R/W	R/W	R/W	R/W	R/W
Reset	0	0	0	0	0	0	0	0

Bit	7	6	5	4	3	2	1	0
	GP[7:0]							
Access	R/W	R/W	R/W	R/W	R/W	R/W	R/W	R/W
Reset	0	0	0	0	0	0	0	0

Bits 31:0 – GP[31:0] General Purpose
These bits are for user-defined general purpose use.

23.8 Register Summary - Mode 2 - Clock/Calendar

Offset	Name	Bit Pos.	7	6	5	4	3	2	1	0
0x00	CTRLA	7:0	MATCHCLR	CLKREP			MODE[1:0]		ENABLE	SWRST
		15:8	CLOCKSYNC				PRESCALER[3:0]			
0x02 ... 0x03	Reserved									
0x04	EVCTRL	7:0	PEREO7	PEREO6	PEREO5	PEREO4	PEREO3	PEREO2	PEREO1	PEREO0
		15:8	OVFEO							ALARMEO0
		23:16								
		31:24								
0x08	INTENCLR	7:0	PER7	PER6	PER5	PER4	PER3	PER2	PER1	PER0
		15:8	OVF							ALARM0
0x0A	INTENSET	7:0	PER7	PER6	PER5	PER4	PER3	PER2	PER1	PER0
		15:8	OVF							ALARM0
0x0C	INTFLAG	7:0	PER7	PER6	PER5	PER4	PER3	PER2	PER1	PER0
		15:8	OVF							ALARM0
0x0E	DBGCTRL	7:0								DBGRUN
0x0F	Reserved									
0x10	SYNCBUSY	7:0			ALARM0		CLOCK	FREQCORR	ENABLE	SWRST
		15:8	CLOCKSYNC				MASK0			
		23:16							GP1	GP0
		31:24								
0x14	FREQCORR	7:0	SIGN	VALUE[6:0]						
0x15 ... 0x17	Reserved									
0x18	CLOCK	7:0	MINUTE[1:0]		SECOND[5:0]					
		15:8	HOUR[3:0]				MINUTE[5:2]			
		23:16	MONTH[1:0]		DAY[4:0]					HOUR[4]
		31:24	YEAR[5:0]						MONTH[3:2]	
0x1C ... 0x1F	Reserved									
0x20	ALARM	7:0	MINUTE[1:0]		SECOND[5:0]					
		15:8	HOUR[3:0]				MINUTE[5:2]			
		23:16	MONTH[1:0]		DAY[4:0]					HOUR[4]
		31:24	YEAR[5:0]						MONTH[3:2]	
0x24	MASK	7:0						SEL[2:0]		
0x25 ... 0x3F	Reserved									
0x40	GP0	7:0	GP[7:0]							
		15:8	GP[15:8]							
		23:16	GP[23:16]							
		31:24	GP[31:24]							
0x44	GP1	7:0	GP[7:0]							
		15:8	GP[15:8]							
		23:16	GP[23:16]							
		31:24	GP[31:24]							

23.8.1 Control A in Clock/Calendar mode (CTRLA.MODE=2)

Name: CTRLA
Offset: 0x00
Reset: 0x0000
Property: PAC Write-Protection, Enable-Protected, Write-Synchronized

Bit	15	14	13	12	11	10	9	8
	CLOCKSYNC				PRESCALER[3:0]			
Access	R/W				R/W	R/W	R/W	R/W
Reset	0				0	0	0	0

Bit	7	6	5	4	3	2	1	0
	MATCHCLR	CLKREP			MODE[1:0]		ENABLE	SWRST
Access	R/W	R/W			R/W	R/W	R/W	R/W
Reset	0	0			0	0	0	0

Bit 15 – CLOCKSYNC CLOCK Read Synchronization Enable
The CLOCK register requires synchronization when reading. Disabling the synchronization will prevent reading valid values from the CLOCK register.
This bit is not enable-protected.

Value	Description
0	CLOCK read synchronization is disabled
1	CLOCK read synchronization is enabled

Bits 11:8 – PRESCALER[3:0] Prescaler
These bits define the prescaling factor for the RTC clock source (GCLK_RTC) to generate the counter clock (CLK_RTC_CNT). Periodic events and interrupts are not available when the prescaler is off. These bits are not synchronized.

Value	Name	Description
0x0	OFF	CLK_RTC_CNT = GCLK_RTC/1
0x1	DIV1	CLK_RTC_CNT = GCLK_RTC/1
0x2	DIV2	CLK_RTC_CNT = GCLK_RTC/2
0x3	DIV4	CLK_RTC_CNT = GCLK_RTC/4
0x4	DIV8	CLK_RTC_CNT = GCLK_RTC/8
0x5	DIV16	CLK_RTC_CNT = GCLK_RTC/16
0x6	DIV32	CLK_RTC_CNT = GCLK_RTC/32
0x7	DIV64	CLK_RTC_CNT = GCLK_RTC/64
0x8	DIV128	CLK_RTC_CNT = GCLK_RTC/128
0x9	DIV256	CLK_RTC_CNT = GCLK_RTC/256
0xA	DIV512	CLK_RTC_CNT = GCLK_RTC/512
0xB	DIV1024	CLK_RTC_CNT = GCLK_RTC/1024
0xC-0xF	-	Reserved

Bit 7 – MATCHCLR Clear on Match
This bit is valid only in Mode 0 (COUNT32) and Mode 2 (CLOCK). This bit can be written only when the peripheral is disabled. This bit is not synchronized.

Value	Description
0	The counter is not cleared on a Compare/Alarm 0 match
1	The counter is cleared on a Compare/Alarm 0 match

Bit 6 – CLKREP Clock Representation
This bit is valid only in Mode 2 and determines how the hours are represented in the Clock Value (CLOCK) register. This bit can be written only when the peripheral is disabled. This bit is not synchronized.

Value	Description
0	24 Hour

Value	Description
1	12 Hour (AM/PM)

Bits 3:2 – MODE[1:0] Operating Mode
This field defines the operating mode of the RTC. This bit is not synchronized.

Value	Name	Description
0x0	COUNT32	Mode 0: 32-bit counter
0x1	COUNT16	Mode 1: 16-bit counter
0x2	CLOCK	Mode 2: Clock/calendar
0x3	-	Reserved

Bit 1 – ENABLE Enable
Due to synchronization there is delay from writing CTRLA.ENABLE until the peripheral is enabled/disabled. The value written to CTRLA.ENABLE will read back immediately and the Enable bit in the Synchronization Busy register (SYNCBUSY.ENABLE) will be set. SYNCBUSY.ENABLE will be cleared when the operation is complete.

Value	Description
0	The peripheral is disabled
1	The peripheral is enabled

Bit 0 – SWRST Software Reset
Writing a '0' to this bit has no effect.
Writing a '1' to this bit resets all registers in the RTC, except DBGCTRL, to their initial state, and the RTC will be disabled.
Writing a '1' to CTRLA.SWRST will always take precedence, meaning that all other writes in the same write-operation will be discarded.
Due to synchronization there is a delay from writing CTRLA.SWRST until the reset is complete. CTRLA.SWRST will be cleared when the reset is complete.

Value	Description
0	There is not reset operation ongoing
1	The reset operation is ongoing

23.8.2 Event Control in Clock/Calendar mode (CTRLA.MODE=2)

Name: EVCTRL
Offset: 0x04
Reset: 0x00000000
Property: PAC Write-Protection, Enable-Protected

Bit	31	30	29	28	27	26	25	24
Access								
Reset								

Bit	23	22	21	20	19	18	17	16
Access								
Reset								

Bit	15	14	13	12	11	10	9	8
	OVFEO							ALARMEO0
Access	R/W							R/W
Reset	0							0

Bit	7	6	5	4	3	2	1	0
	PEREO7	PEREO6	PEREO5	PEREO4	PEREO3	PEREO2	PEREO1	PEREO0
Access	R/W	R/W	R/W	R/W	R/W	R/W	R/W	R/W
Reset	0	0	0	0	0	0	0	0

Bit 15 – OVFEO Overflow Event Output Enable

Value	Description
0	Overflow event is disabled and will not be generated.
1	Overflow event is enabled and will be generated for every overflow.

Bit 8 – ALARMEO0 Alarm 0 Event Output Enable

Value	Description
0	Alarm 0 event is disabled and will not be generated.
1	Alarm 0 event is enabled and will be generated for every compare match.

Bits 0, 1, 2, 3, 4, 5, 6, 7 – PEREOx Periodic Interval x Event Output Enable [x = 7..0]

Value	Description
0	Periodic Interval x event is disabled and will not be generated.
1	Periodic Interval x event is enabled and will be generated.

23.8.3 Interrupt Enable Clear in Clock/Calendar mode (CTRLA.MODE=2)

Name: INTENCLR
Offset: 0x08
Reset: 0x0000
Property: PAC Write-Protection

This register allows the user to disable an interrupt without doing a read-modify-write operation. Changes in this register will also be reflected in the Interrupt Enable Set (INTENSET) register.

Bit	15	14	13	12	11	10	9	8
	OVF							ALARM0
Access	R/W							R/W
Reset	0							0

Bit	7	6	5	4	3	2	1	0
	PER7	PER6	PER5	PER4	PER3	PER2	PER1	PER0
Access	R/W	R/W	R/W	R/W	R/W	R/W	R/W	R/W
Reset	0	0	0	0	0	0	0	0

Bit 15 – OVF Overflow Interrupt Enable
Writing a '0' to this bit has no effect. Writing a '1' to this bit will clear the Overflow Interrupt Enable bit, which disables the Overflow interrupt.

Value	Description
0	The Overflow interrupt is disabled.
1	The Overflow interrupt is enabled.

Bit 8 – ALARM0 Alarm 0 Interrupt Enable
Writing a '0' to this bit has no effect. Writing a '1' to this bit will clear the Alarm 0 Interrupt Enable bit, which disables the Alarm interrupt.

Value	Description
0	The Alarm 0 interrupt is disabled.
1	The Alarm 0 interrupt is enabled.

Bits 0, 1, 2, 3, 4, 5, 6, 7 – PERx Periodic Interval x Interrupt Enable [x = 7..0]
Writing a '0' to this bit has no effect. Writing a '1' to this bit will clear the Periodic Interval x Interrupt Enable bit, which disables the Periodic Interval x interrupt.

Value	Description
0	Periodic Interval x interrupt is disabled.
1	Periodic Interval x interrupt is enabled.

23.8.4 Interrupt Enable Set in Clock/Calendar mode (CTRLA.MODE=2)

Name: INTENSET
Offset: 0x0A
Reset: 0x0000
Property: PAC Write-Protection

This register allows the user to enable an interrupt without doing a read-modify-write operation. Changes in this register will also be reflected in the Interrupt Enable Clear (INTENCLR) register.

Bit	15	14	13	12	11	10	9	8
	OVF							ALARM0
Access	R/W							R/W
Reset	0							0

Bit	7	6	5	4	3	2	1	0
	PER7	PER6	PER5	PER4	PER3	PER2	PER1	PER0
Access	R/W	R/W	R/W	R/W	R/W	R/W	R/W	R/W
Reset	0	0	0	0	0	0	0	0

Bit 15 – OVF Overflow Interrupt Enable
Writing a '0' to this bit has no effect. Writing a '1' to this bit will set the Overflow Interrupt Enable bit, which enables the Overflow interrupt.

Value	Description
0	The Overflow interrupt is disabled.
1	The Overflow interrupt is enabled.

Bit 8 – ALARM0 Alarm 0 Interrupt Enable
Writing a '0' to this bit has no effect. Writing a '1' to this bit will set the Alarm 0 Interrupt Enable bit, which enables the Alarm 0 interrupt.

Value	Description
0	The Alarm 0 interrupt is disabled.
1	The Alarm 0 interrupt is enabled.

Bits 0, 1, 2, 3, 4, 5, 6, 7 – PERx Periodic Interval x Interrupt Enable [x = 7..0]
Writing a '0' to this bit has no effect. Writing a '1' to this bit will set the Periodic Interval x Interrupt Enable bit, which enables the Periodic Interval x interrupt.

Value	Description
0	Periodic Interval x interrupt is disabled.
1	Periodic Interval x interrupt is enabled.

23.8.5 Interrupt Flag Status and Clear in Clock/Calendar mode (CTRLA.MODE=2)

Name: INTFLAG
Offset: 0x0C
Reset: 0x0000
Property: -

Bit	15	14	13	12	11	10	9	8
	OVF							ALARM0
Access	R/W							R/W
Reset	0							0

Bit	7	6	5	4	3	2	1	0
	PER7	PER6	PER5	PER4	PER3	PER2	PER1	PER0
Access	R/W	R/W	R/W	R/W	R/W	R/W	R/W	R/W
Reset	0	0	0	0	0	0	0	0

Bit 15 – OVF Overflow
This flag is cleared by writing a '1' to the flag.
This flag is set on the next CLK_RTC_CNT cycle after an overflow condition occurs, and an interrupt request will be generated if INTENCLR/SET.OVF is '1'.
Writing a '0' to this bit has no effect.
Writing a '1' to this bit clears the Overflow interrupt flag.

Bit 8 – ALARM0 Alarm 0
This flag is cleared by writing a '1' to the flag.
This flag is set on the next CLK_RTC_CNT cycle after a match with the compare condition, and an interrupt request will be generated if INTENCLR/SET.ALARM0 is one.
Writing a '0' to this bit has no effect.
Writing a '1' to this bit clears the Alarm 0 interrupt flag.

Bits 0, 1, 2, 3, 4, 5, 6, 7 – PERx Periodic Interval x [x = 7..0]
This flag is cleared by writing a '1' to the flag.
This flag is set on the 0-to-1 transition of prescaler bit [x+2], and an interrupt request will be generated if INTENCLR/SET.PERx is '1'.
Writing a '0' to this bit has no effect.
Writing a '1' to this bit clears the Periodic Interval x interrupt flag.

23.8.6 Debug Control

Name: DBGCTRL
Offset: 0x0E
Reset: 0x00
Property: PAC Write-Protection

Bit	7	6	5	4	3	2	1	0
								DBGRUN
Access								R/W
Reset								0

Bit 0 – DBGRUN Debug Run
This bit is not reset by a software reset.
This bit controls the functionality when the CPU is halted by an external debugger.

Value	Description
0	The RTC is halted when the CPU is halted by an external debugger.
1	The RTC continues normal operation when the CPU is halted by an external debugger.

23.8.7 Synchronization Busy in Clock/Calendar mode (CTRLA.MODE=2)

Name: SYNCBUSY
Offset: 0x10
Reset: 0x00000000
Property: -

Bit	31	30	29	28	27	26	25	24
Access								
Reset								

Bit	23	22	21	20	19	18	17	16
							GP1	GP0
Access							R/W	R/W
Reset							0	0

Bit	15	14	13	12	11	10	9	8
	CLOCKSYNC				MASK0			
Access	R				R			
Reset	0				0			

Bit	7	6	5	4	3	2	1	0
			ALARM0		CLOCK	FREQCORR	ENABLE	SWRST
Access			R		R	R	R	R
Reset			0		0	0	0	0

Bits 16, 17 – GPn General Purpose n
These bits are for user-defined general purpose use.

Bit 15 – CLOCKSYNC Clock Read Sync Enable Synchronization Busy Status

Value	Description
0	Write synchronization for CTRLA.CLOCKSYNC bit is complete.
1	Write synchronization for CTRLA.CLOCKSYNC bit is ongoing.

Bit 11 – MASK0 Mask 0 Synchronization Busy Status

Value	Description
0	Write synchronization for MASK0 register is complete.
1	Write synchronization for MASK0 register is ongoing.

Bit 5 – ALARM0 Alarm 0 Synchronization Busy Status

Value	Description
0	Write synchronization for ALARM0 register is complete.
1	Write synchronization for ALARM0 register is ongoing.

Bit 3 – CLOCK Clock Register Synchronization Busy Status

Value	Description
0	Read/write synchronization for CLOCK register is complete.
1	Read/write synchronization for CLOCK register is ongoing.

Bit 2 – FREQCORR Frequency Correction Synchronization Busy Status

Value	Description
0	Write synchronization for FREQCORR register is complete.
1	Write synchronization for FREQCORR register is ongoing.

Bit 1 – ENABLE Enable Synchronization Busy Status

Value	Description
0	Write synchronization for CTRLA.ENABLE bit is complete.
1	Write synchronization for CTRLA.ENABLE bit is ongoing.

Bit 0 – SWRST Software Reset Synchronization Busy Status

Value	Description
0	Write synchronization for CTRLA.SWRST bit is complete.
1	Write synchronization for CTRLA.SWRST bit is ongoing.

23.8.8 Frequency Correction

Name: FREQCORR
Offset: 0x14
Reset: 0x00
Property: PAC Write-Protection, Write-Synchronized

Bit	7	6	5	4	3	2	1	0
	SIGN	VALUE[6:0]						
Access	R/W	R/W	R/W	R/W	R/W	R/W	R/W	R/W
Reset	0	0	0	0	0	0	0	0

Bit 7 – SIGN Correction Sign

Value	Description
0	The correction value is positive, i.e., frequency will be decreased.
1	The correction value is negative, i.e., frequency will be increased.

Bits 6:0 – VALUE[6:0] Correction Value
These bits define the amount of correction applied to the RTC prescaler.

Value	Description
0	Correction is disabled and the RTC frequency is unchanged.
1 - 127	The RTC frequency is adjusted according to the value.

23.8.9 Clock Value in Clock/Calendar mode (CTRLA.MODE=2)

Name: CLOCK
Offset: 0x18
Reset: 0x00000000
Property: PAC Write-Protection, Write-Synchronized, Read-Synchronized

Note: This register must be written with a 32-bit write access.

Bit	31	30	29	28	27	26	25	24
	YEAR[5:0]						MONTH[3:2]	
Access	R/W	R/W	R/W	R/W	R/W	R/W	R/W	R/W
Reset	0	0	0	0	0	0	0	0

Bit	23	22	21	20	19	18	17	16
	MONTH[1:0]		DAY[4:0]					HOUR[4]
Access	R/W	R/W	R/W	R/W	R/W	R/W	R/W	R/W
Reset	0	0	0	0	0	0	0	0

Bit	15	14	13	12	11	10	9	8
	HOUR[3:0]				MINUTE[5:2]			
Access	R/W	R/W	R/W	R/W	R/W	R/W	R/W	R/W
Reset	0	0	0	0	0	0	0	0

Bit	7	6	5	4	3	2	1	0
	MINUTE[1:0]		SECOND[5:0]					
Access	R/W	R/W	R/W	R/W	R/W	R/W	R/W	R/W
Reset	0	0	0	0	0	0	0	0

Bits 31:26 – YEAR[5:0] Year
The year offset with respect to the reference year (defined in software).
The year is considered a leap year if YEAR[1:0] is zero.

Bits 25:22 – MONTH[3:0] Month
1 – January
2 – February
...
12 – December

Bits 21:17 – DAY[4:0] Day
Day starts at 1 and ends at 28, 29, 30, or 31, depending on the month and year.

Bits 16:12 – HOUR[4:0] Hour
When CTRLA.CLKREP=0, the Hour bit group is in 24-hour format, with values 0-23. When CTRLA.CLKREP=1, HOUR[3:0] has values 1-12, and HOUR[4] represents AM (0) or PM (1).

Bits 11:6 – MINUTE[5:0] Minute
0 – 59

Bits 5:0 – SECOND[5:0] Second
0 – 59

23.8.10 Alarm Value in Clock/Calendar mode (CTRLA.MODE=2)

Name: ALARM
Offset: 0x20
Reset: 0x00000000
Property: PAC Write-Protection, Write-Synchronized

The 32-bit value of ALARM is continuously compared with the 32-bit CLOCK value, based on the masking set by MASK.SEL. When a match occurs, the Alarm n interrupt flag in the Interrupt Flag Status and Clear register (INTFLAG.ALARM) is set on the next counter cycle, and the counter is cleared if CTRLA.MATCHCLR is '1'.

Bit	31	30	29	28	27	26	25	24
	YEAR[5:0]						MONTH[3:2]	
Access	R/W	R/W	R/W	R/W	R/W	R/W	R/W	R/W
Reset	0	0	0	0	0	0	0	0

Bit	23	22	21	20	19	18	17	16
	MONTH[1:0]		DAY[4:0]					HOUR[4]
Access	R/W	R/W	R/W	R/W	R/W	R/W	R/W	R/W
Reset	0	0	0	0	0	0	0	0

Bit	15	14	13	12	11	10	9	8
	HOUR[3:0]				MINUTE[5:2]			
Access	R/W	R/W	R/W	R/W	R/W	R/W	R/W	R/W
Reset	0	0	0	0	0	0	0	0

Bit	7	6	5	4	3	2	1	0
	MINUTE[1:0]		SECOND[5:0]					
Access	R/W	R/W	R/W	R/W	R/W	R/W	R/W	R/W
Reset	0	0	0	0	0	0	0	0

Bits 31:26 – YEAR[5:0] Year
The alarm year. Years are only matched if MASK.SEL is 6

Bits 25:22 – MONTH[3:0] Month
The alarm month. Months are matched only if MASK.SEL is greater than 4.

Bits 21:17 – DAY[4:0] Day
The alarm day. Days are matched only if MASK.SEL is greater than 3.

Bits 16:12 – HOUR[4:0] Hour
The alarm hour. Hours are matched only if MASK.SEL is greater than 2.

Bits 11:6 – MINUTE[5:0] Minute
The alarm minute. Minutes are matched only if MASK.SEL is greater than 1.

Bits 5:0 – SECOND[5:0] Second
The alarm second. Seconds are matched only if MASK.SEL is greater than 0.

© 2020 Microchip Technology Inc.

23.8.11 Alarm Mask in Clock/Calendar mode (CTRLA.MODE=2)

Name: MASK
Offset: 0x24
Reset: 0x00
Property: PAC Write-Protection, Write-Synchronized

Bit	7	6	5	4	3	2	1	0
						SEL[2:0]		
Access						R/W	R/W	R/W
Reset						0	0	0

Bits 2:0 – SEL[2:0] Alarm Mask Selection
These bits define which bit groups of ALARM are valid.

Value	Name	Description
0x0	OFF	Alarm Disabled
0x1	SS	Match seconds only
0x2	MMSS	Match seconds and minutes only
0x3	HHMMSS	Match seconds, minutes, and hours only
0x4	DDHHMMSS	Match seconds, minutes, hours, and days only
0x5	MMDDHHMMSS	Match seconds, minutes, hours, days, and months only
0x6	YYMMDDHHMMSS	Match seconds, minutes, hours, days, months, and years
0x7	-	Reserved

23.8.12 General Purpose n

Name: GPn
Offset: 0x40 + n*0x04 [n=0..1]
Reset: 0x00000000
Property: -

Bit	31	30	29	28	27	26	25	24
	GP[31:24]							
Access	R/W	R/W	R/W	R/W	R/W	R/W	R/W	R/W
Reset	0	0	0	0	0	0	0	0

Bit	23	22	21	20	19	18	17	16
	GP[23:16]							
Access	R/W	R/W	R/W	R/W	R/W	R/W	R/W	R/W
Reset	0	0	0	0	0	0	0	0

Bit	15	14	13	12	11	10	9	8
	GP[15:8]							
Access	R/W	R/W	R/W	R/W	R/W	R/W	R/W	R/W
Reset	0	0	0	0	0	0	0	0

Bit	7	6	5	4	3	2	1	0
	GP[7:0]							
Access	R/W	R/W	R/W	R/W	R/W	R/W	R/W	R/W
Reset	0	0	0	0	0	0	0	0

Bits 31:0 – GP[31:0] General Purpose
These bits are for user-defined general purpose use.

24. Direct Memory Access Controller (DMAC)

24.1 Overview

The Direct Memory Access Controller (DMAC) contains both a Direct Memory Access engine and a Cyclic Redundancy Check (CRC) engine. The DMAC can transfer data between memories and peripherals, and thus off-load these tasks from the CPU. It enables high data transfer rates with minimum CPU intervention, and frees up CPU time. With access to all peripherals, the DMAC can handle automatic transfer of data between communication modules.

The DMA part of the DMAC has several DMA channels which can receive different types of transfer triggers and generate transfer requests from the DMA channels to the arbiter (Refer to the Block Diagram). The arbiter will select one DMA channel at a time to act as the active channel. When an active channel has been selected, the fetch engine of the DMAC will fetch a transfer descriptor from the SRAM and store it in the internal memory of the active channel, which will then execute the data transmission.

An ongoing data transfer of an active channel can be interrupted by a higher prioritized DMA channel. The DMAC will write back the updated transfer descriptor from the internal memory of the active channel to SRAM, and grant the higher prioritized channel to start transfer as the new active channel. Once a DMA channel is done with its transfer, interrupts and events can be generated optionally.

The DMAC has four bus interfaces:

- The *data transfer bus* is used for performing the actual DMA transfer.
- The *AHB/APB Bridge bus* is used when writing and reading the I/O registers of the DMAC.
- The *descriptor fetch bus* is used by the fetch engine to fetch transfer descriptors before data transfer can be started or continued.
- The *write-back bus* is used to write the transfer descriptor back to SRAM.

All buses are AHB master interfaces except the AHB/APB Bridge bus, which is an APB slave interface.

The CRC engine can be used by software to detect an accidental error in the transferred data and to take corrective action, such as requesting the data to be sent again or simply not using the incorrect data.

24.2 Features

- Data transfer from:
  - Peripheral-to-peripheral
  - Peripheral-to-memory
  - Memory-to-peripheral
  - Memory-to-memory
- Transfer trigger sources
  - Software
  - Events from Event System
  - Dedicated requests from peripherals
- SRAM-based transfer descriptors
  - Single transfer using one descriptor
  - Multi-buffer or circular buffer modes by linking multiple descriptors
- Up to 12 channels
  - Enable 12 independent transfers
  - Automatic descriptor fetch for each channel
  - Suspend/resume operation support for each channel
- Flexible arbitration scheme
  - 4 configurable priority levels for each channel

  - Fixed or round-robin priority scheme within each priority level
- From 1 KB to 256 KB data transfer in a single block transfer
- Multiple addressing modes:
  - Static
  - Configurable increment scheme
- Optional interrupt generation
  - On block transfer complete
  - On error detection
  - On channel suspend
- 4 event inputs
  - One event input for each of the 4 least significant DMA channels
  - Can be selected to trigger normal transfers, periodic transfers or conditional transfers
  - Can be selected to suspend or resume channel operation
- 4 event outputs
  - One output event for each of the 4 least significant DMA channels
  - Selectable generation on AHB, block, or transaction transfer complete
- Error management supported by write-back function
  - Dedicated Write-Back memory section for each channel to store ongoing descriptor transfer
- CRC polynomial software selectable to
  - CRC-16 (CRC-CCITT)
  - CRC-32 (IEEE® 802.3)

24.3 Block Diagram

Figure 24-1. DMAC Block Diagram

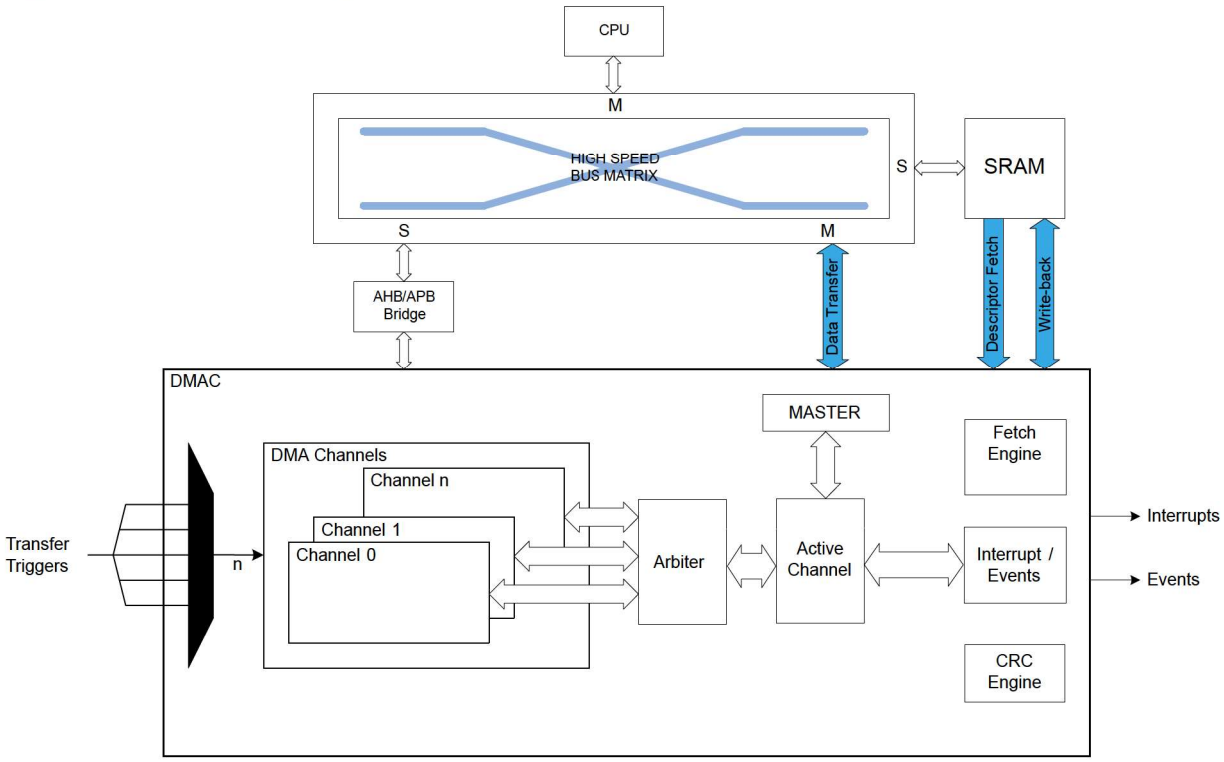

24.4 Peripheral Dependencies

Peripheral	Base Address	IRQ	AHB CLK	APB CLK	Generic CLK	PAC		Events		DMA	Sleep Walking
			Enabled at reset	Enabled at reset	Index	Index	Prot at reset	User	Generator	Index	
DMAC	0x41006000	7	Y	N/A	-	3	N	5-8: CH0-3	31-34: CH0-3	-	Y

24.5 Functional Description

24.5.1 Principle of Operation

The DMAC consists of a DMA module and a CRC module.

24.5.1.1 DMA

The DMAC can transfer data between memories and peripherals without interaction from the CPU. The data transferred by the DMAC are called transactions, and these transactions can be split into smaller data transfers. The following figure shows the relationship between the different transfer sizes:

Figure 24-2. DMA Transfer Sizes

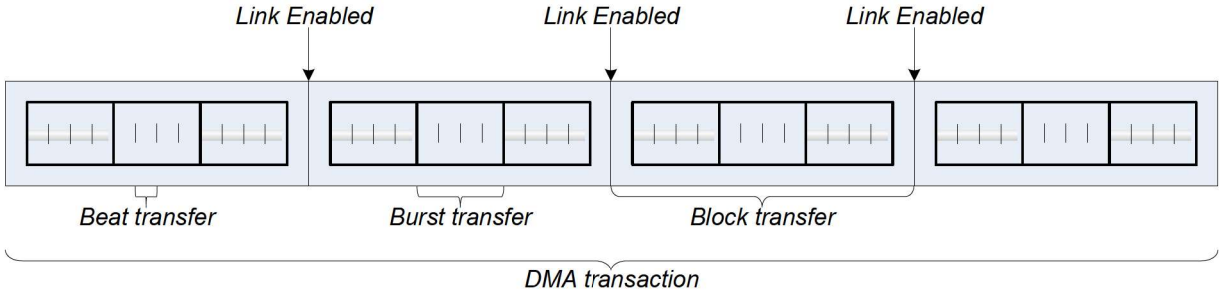

- Beat transfer: The size of one data transfer bus access, and the size is selected by writing the Beat Size bit group in the Block Transfer Control register (BTCTRL.BEATSIZE)
- Block transfer: The amount of data one transfer descriptor can transfer, and the amount can range from 1 to 64k beats. A block transfer can be interrupted.
- Transaction: The DMAC can link several transfer descriptors by having the first descriptor pointing to the second and so forth, as shown in the figure above. A DMA transaction is the complete transfer of all blocks within a linked list.

A transfer descriptor describes how a block transfer should be carried out by the DMAC, and it must remain in SRAM. For further details on the transfer descriptor refer to 24.5.2.3 Transfer Descriptors.

The figure above shows several block transfers linked together, which are called linked descriptors. For further information about linked descriptors, refer to 24.5.3.1 Linked Descriptors.

A DMA transfer is initiated by an incoming transfer trigger on one of the DMA channels. This trigger can be configured to be either a software trigger, an event trigger, or one of the dedicated peripheral triggers. The transfer trigger will result in a DMA transfer request from the specific channel to the arbiter. If there are several DMA channels with pending transfer requests, the arbiter chooses which channel is granted access to become the active channel. The DMA channel granted access as the active channel will carry out the transaction as configured in the transfer descriptor. A current transaction can be interrupted by a higher prioritized channel, but will resume the block transfer when the according DMA channel is granted access as the active channel again.

For each beat transfer, an optional output event can be generated. For each block transfer, optional interrupts and an optional output event can be generated. When a transaction is completed, depending on the configuration, the DMA channel will either be suspended or disabled.

24.5.1.2 CRC

The internal CRC engine supports two commonly used CRC polynomials: CRC-16 (CRC-CCITT) and CRC-32 (IEEE 802.3). It can be used on a selectable DMA channel, or on the I/O interface. Refer to 24.5.3.7 CRC Operation for details.

24.5.2 Basic Operation

24.5.2.1 Initialization

The following DMAC registers are enable-protected, meaning that they can only be written when the DMAC is disabled (CTRL.DMAENABLE=0):

- Descriptor Base Memory Address register (BASEADDR)
- Write-Back Memory Base Address register (WRBADDR)

The following DMAC bit is enable-protected, meaning that it can only be written when both the DMAC and CRC are disabled (CTRL.DMAENABLE=0 and CTRL.CRCENABLE=0):

- Software Reset bit in Control register (CTRL.SWRST)

The following DMA channel register is enable-protected, meaning that it can only be written when the corresponding DMA channel is disabled (CHCTRLA.ENABLE=0):

- Channel Control B (CHCTRLB) register, except the Command bit (CHCTRLB.CMD) and the Channel Arbitration Level bit (CHCTRLB.LVL)

The following DMA channel bit is enable-protected, meaning that it can only be written when the corresponding DMA channel is disabled:

- Channel Software Reset bit in Channel Control A register (CHCTRLA.SWRST)

The following CRC registers are enable-protected, meaning that they can only be written when the CRC is disabled (CTRL.CRCENABLE=0):

- CRC Control register (CRCCTRL)
- CRC Checksum register (CRCCHKSUM)

Enable-protection is denoted by the "Enable-Protected" property in the register description.

Before the DMAC is enabled it must be configured, as outlined by the following steps:

- The SRAM address of where the descriptor memory section is located must be written to the Description Base Address (BASEADDR) register
- The SRAM address of where the write-back section should be located must be written to the Write-Back Memory Base Address (WRBADDR) register
- Priority level x of the arbiter can be enabled by setting the Priority Level x Enable bit in the Control register (CTRL.LVLENx=1)

Before a DMA channel is enabled, the DMA channel and the corresponding first transfer descriptor must be configured, as outlined by the following steps:

- DMA channel configurations
  - The channel number of the DMA channel to configure must be written to the Channel ID (CHID) register
  - Trigger action must be selected by writing the Trigger Action bit group in the Channel Control B register (CHCTRLB.TRIGACT)
  - Trigger source must be selected by writing the Trigger Source bit group in the Channel Control B register (CHCTRLB.TRIGSRC)
- Transfer Descriptor
  - The size of each access of the data transfer bus must be selected by writing the Beat Size bit group in the Block Transfer Control register (BTCTRL.BEATSIZE)
  - The transfer descriptor must be made valid by writing a one to the Valid bit in the Block Transfer Control register (BTCTRL.VALID)
  - Number of beats in the block transfer must be selected by writing the Block Transfer Count (BTCNT) register

  - Source address for the block transfer must be selected by writing the Block Transfer Source Address (SRCADDR) register
  - Destination address for the block transfer must be selected by writing the Block Transfer Destination Address (DSTADDR) register

If CRC calculation is needed, the CRC engine must be configured before it is enabled, as outlined by the following steps:

- The CRC input source must selected by writing the CRC Input Source bit group in the CRC Control register (CRCCTRL.CRCSRC)
- The type of CRC calculation must be selected by writing the CRC Polynomial Type bit group in the CRC Control register (CRCCTRL.CRCPOLY)
- If I/O is selected as input source, the beat size must be selected by writing the CRC Beat Size bit group in the CRC Control register (CRCCTRL.CRCBEATSIZE)

24.5.2.2 Enabling, Disabling, and Resetting

The DMAC is enabled by writing the DMA Enable bit in the Control register (CTRL.DMAENABLE) to '1'. The DMAC is disabled by writing a '0' to CTRL.DMAENABLE.

A DMA channel is enabled by writing the Enable bit in the Channel Control A register (CHCTRLA.ENABLE) to '1', after writing the corresponding channel id to the Channel ID bit group in the Channel ID register (CHID.ID). A DMA channel is disabled by writing a '0' to CHCTRLA.ENABLE.

The CRC is enabled by writing a '1' to the CRC Enable bit in the Control register (CTRL.CRCENABLE). The CRC is disabled by writing a '0' to CTRL.CRCENABLE.

The DMAC is reset by writing a '1' to the Software Reset bit in the Control register (CTRL.SWRST) while the DMAC and CRC are disabled. All registers in the DMAC except DBGCTRL will be reset to their initial state.

A DMA channel is reset by writing a '1' to the Software Reset bit in the Channel Control A register (CHCTRLA.SWRST), after writing the corresponding channel id to the Channel ID bit group in the Channel ID register (CHID.ID). The channel registers will be reset to their initial state. The corresponding DMA channel must be disabled in order for the reset to take effect.

24.5.2.3 Transfer Descriptors

Together with the channel configurations the transfer descriptors decides how a block transfer should be executed. Before a DMA channel is enabled (CHCTRLA.ENABLE is written to one), and receives a transfer trigger, its first transfer descriptor has to be initialized and valid (BTCTRL.VALID). The first transfer descriptor describes the first block transfer of a transaction.

All transfer descriptors must reside in SRAM. The addresses stored in the Descriptor Memory Section Base Address (BASEADDR) and Write-Back Memory Section Base Address (WRBADDR) registers tell the DMAC where to find the descriptor memory section and the write-back memory section.

The descriptor memory section is where the DMAC expects to find the first transfer descriptors for all DMA channels. As BASEADDR points only to the first transfer descriptor of channel 0 (see figure below), all first transfer descriptors must be stored in a contiguous memory section, where the transfer descriptors must be ordered according to their channel number. For further details on linked descriptors, refer to 24.5.3.1 Linked Descriptors.

The write-back memory section is the section where the DMAC stores the transfer descriptors for the ongoing block transfers. WRBADDR points to the ongoing transfer descriptor of channel 0. All ongoing transfer descriptors will be stored in a contiguous memory section where the transfer descriptors are ordered according to their channel number. The figure below shows an example of linked descriptors on DMA channel 0. For further details on linked descriptors, refer to 24.5.3.1 Linked Descriptors.

Figure 24-3. Memory Sections

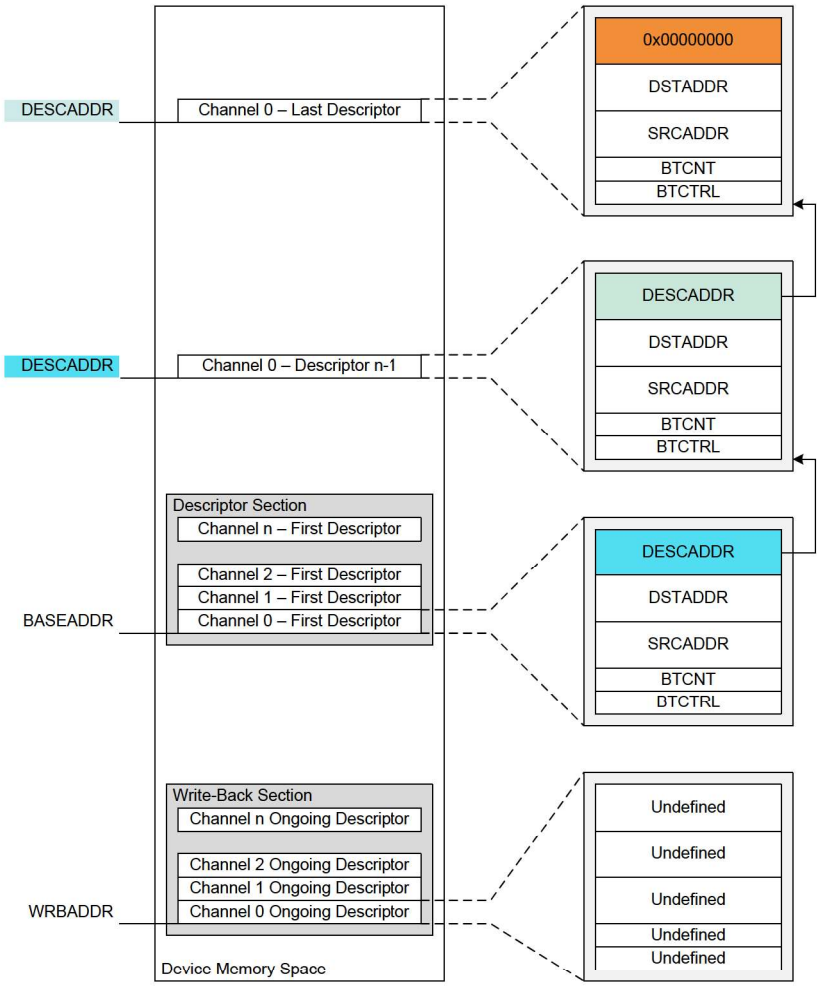

The size of the descriptor and write-back memory sections is dependent on the number of the most significant enabled DMA channel *m*, as shown below:

$$Size = 128\text{bits} \cdot (m + 1)$$

For memory optimization, it is recommended to always use the less significant DMA channels if not all channels are required.

The descriptor and write-back memory sections can either be two separate memory sections, or they can share memory section (BASEADDR=WRBADDR). The benefit of having them in two separate sections, is that the same transaction for a channel can be repeated without having to modify the first transfer descriptor. The benefit of having descriptor memory and write-back memory in the same section is that it requires less SRAM. In addition, the latency from fetching the first descriptor of a transaction to the first burst transfer is executed, is reduced.

24.5.2.4 Arbitration

If a DMA channel is enabled and not suspended when it receives a transfer trigger, it will send a transfer request to the arbiter. When the arbiter receives the transfer request it will include the DMA channel in the queue of channels having pending transfers, and the corresponding Pending Channel x bit in the Pending Channels registers (PENDCH.PENDCHx) will be set. Depending on the arbitration scheme, the arbiter will choose which DMA channel will be the next active channel. The active channel is the DMA channel being granted access to perform its next burst transfer. When the arbiter has granted a DMA channel access to the DMAC, the corresponding bit PENDCH.PENDCHx will be cleared. See also the following figure.

If the upcoming burst transfer is the first for the transfer request, the corresponding Busy Channel x bit in the Busy Channels register will be set (BUSYCH.BUSYCHx=1), and it will remain '1' for the subsequent granted burst transfers.

When the channel has performed its granted burst transfer(s) it will be either fed into the queue of channels with pending transfers, set to be waiting for a new transfer trigger, suspended, or disabled. This depends on the channel and block transfer configuration. If the DMA channel is fed into the queue of channels with pending transfers, the corresponding BUSYCH.BUSYCHx will remain '1'. If the DMA channel is set to wait for a new transfer trigger, suspended, or disabled, the corresponding BUSYCH.BUSYCHx will be cleared.

If a DMA channel is suspended while it has a pending transfer, it will be removed from the queue of pending channels, but the corresponding PENDCH.PENDCHx will remain set. When the same DMA channel is resumed, it will be added to the queue of pending channels again.

If a DMA channel gets disabled (CHCTRLA.ENABLE=0) while it has a pending transfer, it will be removed from the queue of pending channels, and the corresponding PENDCH.PENDCHx will be cleared.

Figure 24-4. Arbiter Overview

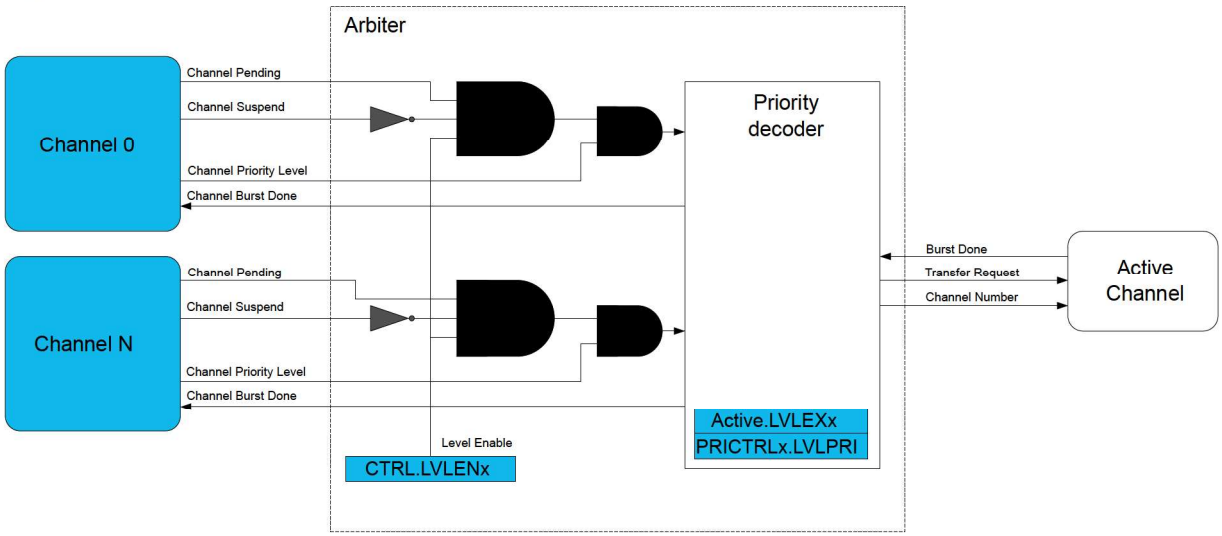

Priority Levels

When a channel level is pending or the channel is transferring data, the corresponding Level Executing bit is set in the Active Channel and Levels register (ACTIVE.LVLEXx).

Each DMA channel supports a 4-level priority scheme. The priority level for a channel is configured by writing to the Channel Arbitration Level bit group in the Channel Control B register (CHCTRLB.LVL). As long as all priority levels are enabled, a channel with a higher priority level number will have priority over a channel with a lower priority level number. Each priority level x is enabled by setting the corresponding Priority Level x Enable bit in the Control register (CTRL.LVLENx=1).

Within each priority level the DMAC's arbiter can be configured to prioritize statically or dynamically:

Static Arbitration within a priority level is selected by writing a '0' to the Level x Round-Robin Scheduling Enable bit in the Priority Control 0 register (PRICTRL0.RRLVLENx).

When static arbitration is selected, the arbiter will prioritize a low channel number over a high channel number as shown in the figure below. When using the static arbitration there is a risk of high channel numbers never being granted access as the active channel. This can be avoided using a dynamic arbitration scheme.

Figure 24-5. Static Priority Scheduling

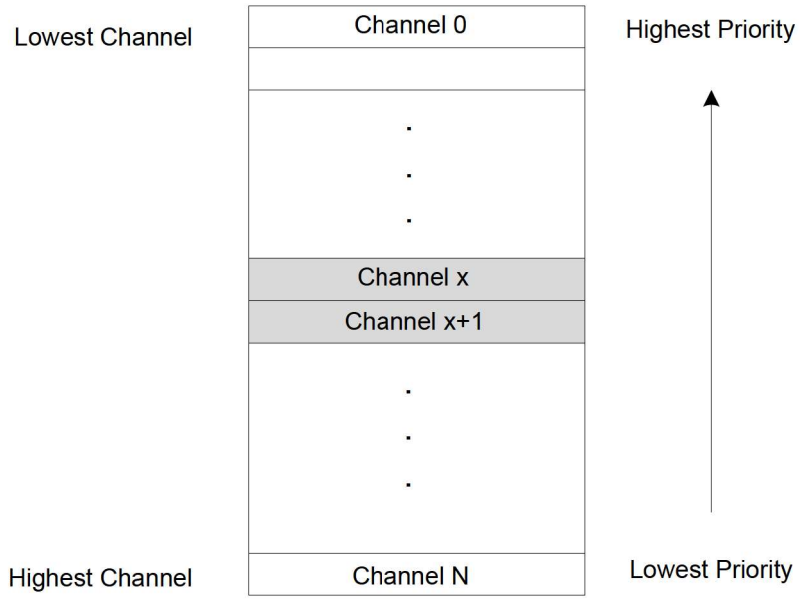

Dynamic Arbitration within a priority level is selected by writing a '1' to PRICTRL0.RRLVLENx.

The dynamic arbitration scheme in the DMAC is round-robin. With the round-robin scheme, the channel number of the last channel being granted access will have the lowest priority the next time the arbiter has to grant access to a channel within the same priority level, as shown in Figure 24-6. The channel number of the last channel being granted access as the active channel is stored in the Level x Channel Priority Number bit group in the Priority Control 0 register (PRICTRL0.LVLPRIx) for the corresponding priority level.

Figure 24-6. Dynamic (Round-Robin) Priority Scheduling

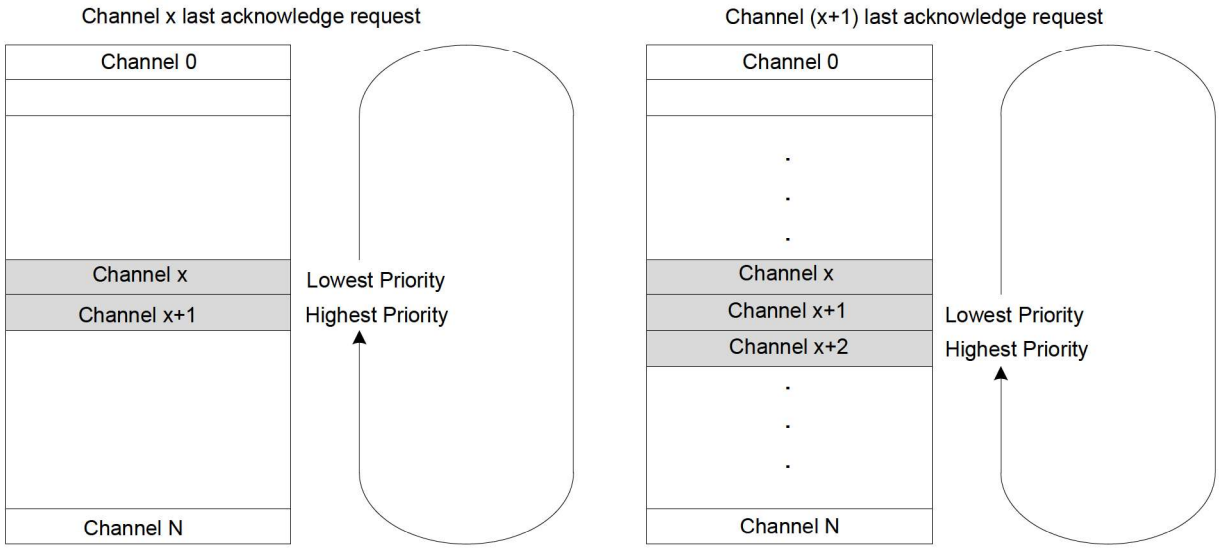

24.5.2.5 Data Transmission

Before the DMAC can perform a data transmission, a DMA channel has to be configured and enabled, its corresponding transfer descriptor has to be initialized, and the arbiter has to grant the DMA channel access as the active channel.

Once the arbiter has granted a DMA channel access as the active channel (refer to DMA Block Diagram section) the transfer descriptor for the DMA channel will be fetched from SRAM using the fetch bus, and stored in the internal memory for the active channel. For a new block transfer, the transfer descriptor will be fetched from the descriptor memory section (BASEADDR); For an ongoing block transfer, the descriptor will be fetched from the write-back memory section (WRBADDR). By using the data transfer bus, the DMAC will read the data from the current source address and write it to the current destination address. For further details on how the current source and destination addresses are calculated, refer to the section on Addressing.

The arbitration procedure is performed after each burst transfer. If the current DMA channel is granted access again, the block transfer counter (BTCNT) of the internal transfer descriptor will be decremented by the number of beats in a burst transfer, the optional output event Beat will be generated if configured and enabled, and the active channel will perform a new burst transfer. If a different DMA channel than the current active channel is granted access, the block transfer counter value will be written to the write-back section before the transfer descriptor of the newly granted DMA channel is fetched into the internal memory of the active channel.

When a block transfer has come to its end (BTCNT is zero), the Valid bit in the Block Transfer Control register will be cleared (BTCTRL.VALID=0) before the entire transfer descriptor is written to the write-back memory. The optional interrupts, Channel Transfer Complete and Channel Suspend, and the optional output event Block, will be generated if configured and enabled. After the last block transfer in a transaction, the Next Descriptor Address register (DESCADDR) will hold the value 0x00000000, and the DMA channel will either be suspended or disabled, depending on the configuration in the Block Action bit group in the Block Transfer Control register (BTCTRL.BLOCKACT). If the transaction has further block transfers pending, DESCADDR will hold the SRAM address to the next transfer descriptor to be fetched. The DMAC will fetch the next descriptor into the internal memory of the active channel and write its content to the write-back section for the channel, before the arbiter gets to choose the next active channel.

24.5.2.6 Transfer Triggers and Actions

A DMA transfer through a DMA channel can be started only when a DMA transfer request is detected, and the DMA channel has been granted access to the DMA. A transfer request can be triggered from software, from a peripheral, or from an event. There are dedicated Trigger Source selections for each DMA Channel Control B (CHCTRLB.TRIGSRC).

The trigger actions are available in the Trigger Action bit group in the Channel Control B register (CHCTRLB.TRIGACT). By default, a trigger generates a request for a block transfer operation. If a single descriptor is defined for a channel, the channel is automatically disabled when a block transfer has been completed. If a list of linked descriptors is defined for a channel, the channel is automatically disabled when the last descriptor in the list is executed. If the list still has descriptors to execute, the channel will be waiting for the next block transfer trigger. When enabled again, the channel will wait for the next block transfer trigger. The trigger actions can also be configured to generate a request for a beat transfer (CHCTRLB.TRIGACT=0x2) or transaction transfer (CHCTRLB.TRIGACT=0x3) instead of a block transfer (CHCTRLB.TRIGACT=0x0).

Figure 24-7 shows an example where triggers are used with two linked block descriptors.

Figure 24-7. Trigger Action and Transfers

Beat Trigger Action

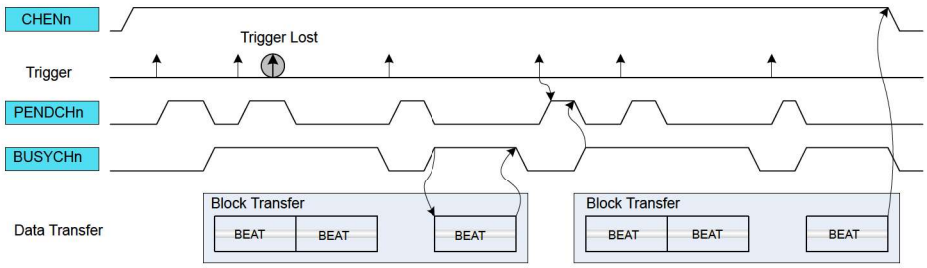

Block Trigger Action

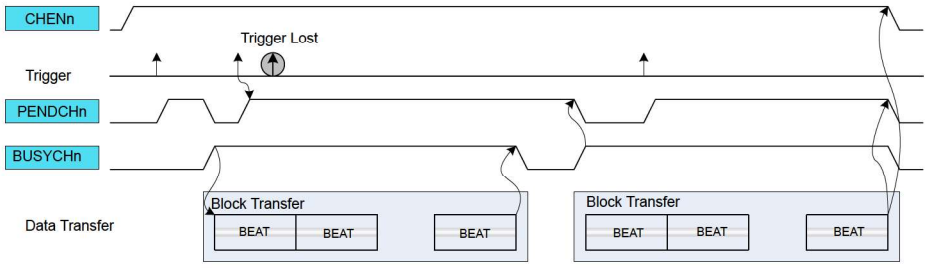

Transaction Trigger Action

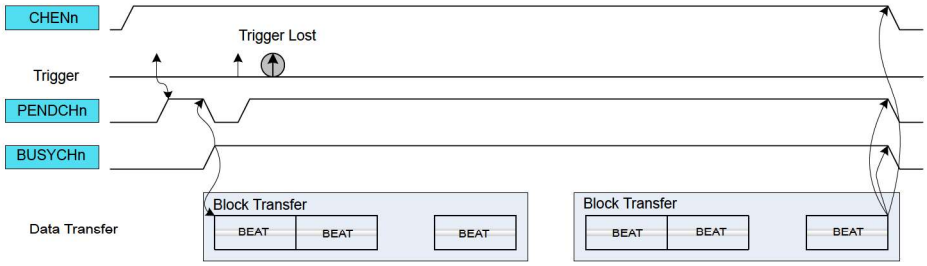

If the trigger source generates a transfer request for a channel during an ongoing transfer, the new transfer request will be kept pending (CHSTATUS.PEND=1), and the new transfer can start after the ongoing one is done. Only one pending transfer can be kept per channel. If the trigger source generates more transfer requests while one is already pending, the additional ones will be lost. All channels pending status flags are also available in the Pending Channels register (PENDCH).

When the transfer starts, the corresponding Channel Busy status flag is set in Channel Status register (CHSTATUS.BUSY). When the trigger action is complete, the Channel Busy status flag is cleared. All channel busy status flags are also available in the Busy Channels register (BUSYCH) in DMAC.

24.5.2.7 Addressing

Each block transfer needs to have both a source address and a destination address defined. The source address is set by writing the Transfer Source Address (SRCADDR) register, the destination address is set by writing the Transfer Destination Address (SRCADDR) register.

The addressing of this DMAC module can be static or incremental, for either source or destination of a block transfer, or both.

Incrementation for the source address of a block transfer is enabled by writing the Source Address Incrementation Enable bit in the Block Transfer Control register (BTCTRL.SRCINC=1). The step size of the incrementation is configurable and can be chosen by writing the Step Selection bit in the Block Transfer Control register (BTCTRL.STEPSEL=1) and writing the desired step size in the Address Increment Step Size bit group in the Block Transfer Control register (BTCTRL.STEPSIZE). If BTCTRL.STEPSEL=0, the step size for the source incrementation will be the size of one beat.

When source address incrementation is configured (BTCTRL.SRCINC=1), SRCADDR is calculated as follows:

If BTCTRL.STEPSEL=1:

$$\text{SRCADDR} = \text{SRCADDR}_{START} + BTCNT \cdot \left(BEATSIZE + 1\right) \cdot 2^{\text{STEPSIZE}}$$

If BTCTRL.STEPSEL=0:

$$\text{SRCADDR} = \text{SRCADDR}_{START} + BTCNT \cdot (BEATSIZE + 1)$$

- $\text{SRCADDR}_{\text{START}}$ is the source address of the first beat transfer in the block transfer
- BTCNT is the initial number of beats remaining in the block transfer
- BEATSIZE is the configured number of bytes in a beat
- STEPSIZE is the configured number of beats for each incrementation

The following figure shows an example where DMA channel 0 is configured to increment the source address by one beat after each beat transfer (BTCTRL.SRCINC=1), and DMA channel 1 is configured to increment the source address by two beats (BTCTRL.SRCINC=1, BTCTRL.STEPSEL=1, and BTCTRL.STEPSIZE=0x1). As the destination address for both channels are peripherals, destination incrementation is disabled (BTCTRL.DSTINC=0).

Figure 24-8. Source Address Increment

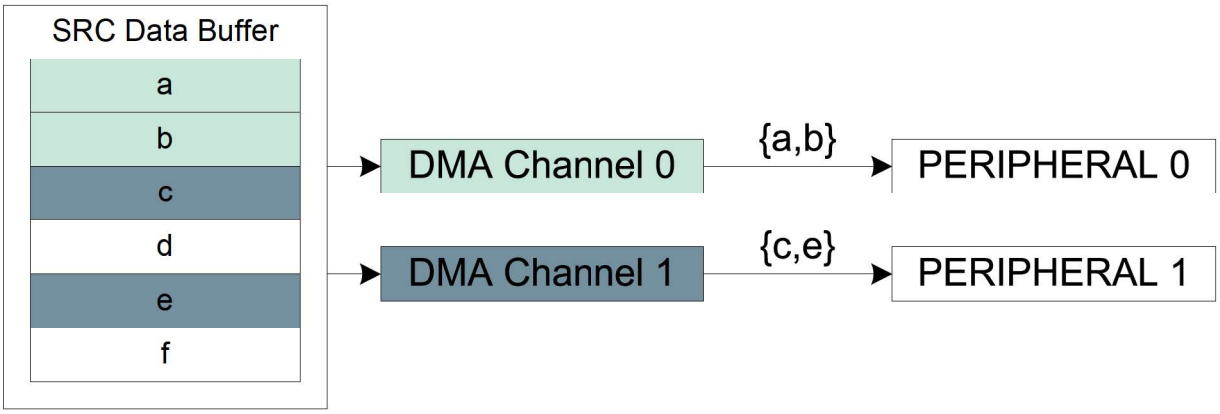

Incrementation for the destination address of a block transfer is enabled by setting the Destination Address Incrementation Enable bit in the Block Transfer Control register (BTCTRL.DSTINC=1). The step size of the incrementation is configurable by clearing BTCTRL.STEPSEL=0 and writing BTCTRL.STEPSIZE to the desired step size. If BTCTRL.STEPSEL=1, the step size for the destination incrementation will be the size of one beat.

When the destination address incrementation is configured (BTCTRL.DSTINC=1), DSTADDR must be set and calculated as follows:

$DSTADDR = DSTADDR_{START} + BTCNT \bullet \left(BEATSIZE + 1\right) \bullet 2^{STEPSIZE}$	where BTCTRL.STEPSEL is zero
$DSTADDR = DSTADDR_{START} + BTCNT \bullet (BEATSIZE + 1)$	where BTCTRL.STEPSEL is one

- $\text{DSTADDR}_{\text{START}}$ is the destination address of the first beat transfer in the block transfer
- BTCNT is the initial number of beats remaining in the block transfer
- BEATSIZE is the configured number of bytes in a beat
- STEPSIZE is the configured number of beats for each incrementation

The followiong figure shows an example where DMA channel 0 is configured to increment destination address by one beat (BTCTRL.DSTINC=1) and DMA channel 1 is configured to increment destination address by two beats (BTCTRL.DSTINC=1, BTCTRL.STEPSEL=0, and BTCTRL.STEPSIZE=0x1). As the source address for both channels are peripherals, source incrementation is disabled (BTCTRL.SRCINC=0).

Figure 24-9. Destination Address Increment

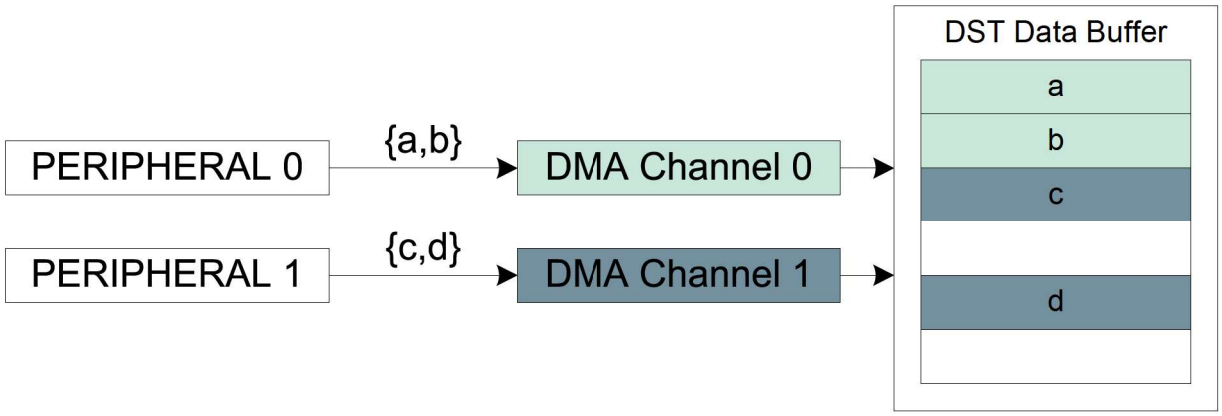

24.5.2.8 Error Handling

If a bus error is received from an AHB slave during a DMA data transfer, the corresponding active channel is disabled and the corresponding Channel Transfer Error Interrupt flag in the Channel Interrupt Status and Clear register (CHINTFLAG.TERR) is set. If enabled, the optional transfer error interrupt is generated. The transfer counter will not be decremented and its current value is written-back in the write-back memory section before the channel is disabled.

When the DMAC fetches an invalid descriptor (BTCTRL.VALID=0) or when the channel is resumed and the DMA fetches the next descriptor with null address (DESCADDR=0x00000000), the corresponding channel operation is suspended, the Channel Suspend Interrupt Flag in the Channel Interrupt Flag Status and Clear register (CHINTFLAG.SUSP) is set, and the Channel Fetch Error bit in the Channel Status register (CHSTATUS.FERR) is set. If enabled, the optional suspend interrupt is generated.

24.5.3 Additional Features

24.5.3.1 Linked Descriptors

A transaction can consist of either a single block transfer or of several block transfers. When a transaction consists of several block transfers it is done with the help of linked descriptors.

Figure 24-3 illustrates how linked descriptors work. When the first block transfer is completed on DMA channel 0, the DMAC fetches the next transfer descriptor, which is pointed to by the value stored in the Next Descriptor Address (DESCADDR) register of the first transfer descriptor. Fetching the next transfer descriptor (DESCADDR) is continued until the last transfer descriptor. When the block transfer for the last transfer descriptor is executed and DESCADDR=0x00000000, the transaction is terminated. For further details on how the next descriptor is fetched from SRAM, refer to section 24.5.2.5 Data Transmission.

24.5.3.1.1 Adding Descriptor to the End of a List

To add a new descriptor at the end of the descriptor list, create the descriptor in SRAM, with DESCADDR=0x00000000 indicating that it is the new last descriptor in the list, and modify the DESCADDR value of the current last descriptor to the address of the newly created descriptor.

24.5.3.1.2 Modifying a Descriptor in a List

In order to add descriptors to a linked list, the following actions must be performed:

1. Enable the Suspend interrupt for the DMA channel.
2. Enable the DMA channel.
3. Reserve memory space in SRAM to configure a new descriptor.
4. Configure the new descriptor:
   - Set the next descriptor address (DESCADDR)
   - Set the destination address (DSTADDR)
   - Set the source address (SRCADDR)
   - Configure the block transfer control (BTCTRL) including
     - Optionally enable the Suspend block action

- Set the descriptor VALID bit

5. Clear the VALID bit for the existing list and for the descriptor which has to be updated.
6. Read DESCADDR from the Write-Back memory.
   – If the DMA has not already fetched the descriptor which requires changes (i.e., DESCADDR is wrong):
     - Update the DESCADDR location of the descriptor from the List
     - Optionally clear the Suspend block action
     - Set the descriptor VALID bit to '1'
     - Optionally enable the Resume software command
   – If the DMA is executing the same descriptor as the one which requires changes:
     - Set the Channel Suspend software command and wait for the Suspend interrupt
     - Update the next descriptor address (DESCRADDR) in the write-back memory
     - Clear the interrupt sources and set the Resume software command
     - Update the DESCADDR location of the descriptor from the List
     - Optionally clear the Suspend block action
     - Set the descriptor VALID bit to '1'
7. Go to step 4 if needed.

24.5.3.1.3 Adding a Descriptor Between Existing Descriptors

To insert a new descriptor 'C' between two existing descriptors ('A' and 'B'), the descriptor currently executed by the DMA must be identified.

1. If DMA is executing descriptor B, descriptor C cannot be inserted.
2. If DMA has not started to execute descriptor A, follow the steps:
   2.1. Set the descriptor A VALID bit to '0'.
   2.2. Set the DESCADDR value of descriptor A to point to descriptor C instead of descriptor B.
   2.3. Set the DESCADDR value of descriptor C to point to descriptor B.
   2.4. Set the descriptor A VALID bit to '1'.
3. If DMA is executing descriptor A:
   3.1. Apply the software suspend command to the channel and
   3.2. Perform steps 2.1 through 2.4.
   3.3. Apply the software resume command to the channel.

24.5.3.2 Channel Suspend

The channel operation can be suspended at any time by software by writing a '1' to the Suspend command in the Command bit field of Channel Control B register (CHCTRLB.CMD). After the ongoing burst transfer is completed, the channel operation is suspended and the suspend command is automatically cleared.

When suspended, the Channel Suspend Interrupt flag in the Channel Interrupt Status and Clear register is set (CHINTFLAG.SUSP=1) and the optional suspend interrupt is generated.

By configuring the block action to suspend by writing Block Action bit group in the Block Transfer Control register (BTCTRL.BLOCKACT is 0x2 or 0x3), the DMA channel will be suspended after it has completed a block transfer. The DMA channel will be kept enabled and will be able to receive transfer triggers, but it will be removed from the arbitration scheme.

If an invalid transfer descriptor (BTCTRL.VALID=0) is fetched from SRAM, the DMA channel will be suspended, and the Channel Fetch Error bit in the Channel Status register(CHASTATUS.FERR) will be set.

Note: Only enabled DMA channels can be suspended. If a channel is disabled when it is attempted to be suspended, the internal suspend command will be ignored.

For more details on transfer descriptors, refer to section 24.5.2.3 Transfer Descriptors.

24.5.3.3 Channel Resume and Next Suspend Skip

A channel operation can be resumed by software by setting the Resume command in the Command bit field of the Channel Control B register (CHCTRLB.CMD). If the channel is already suspended, the channel operation resumes from where it previously stopped when the Resume command is detected. When the Resume command is issued

before the channel is suspended, the next suspend action is skipped and the channel continues the normal operation.

Figure 24-10. Channel Suspend/Resume Operation

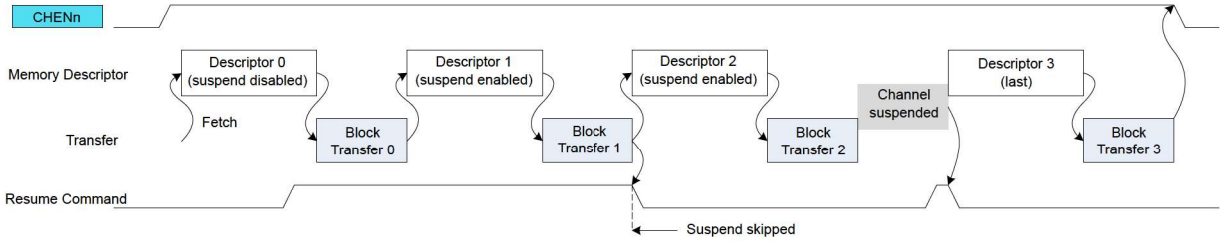

24.5.3.4 Event Input Actions

The event input actions are available only on the least significant DMA channels. For details on channels with event input support, refer to the in the Event system documentation.

Before using event input actions, the event controller must be configured first according to the following table, and the Channel Event Input Enable bit in the Channel Control B register (CHCTRLB.EVIE) must be written to '1'. Refer also to 24.5.5 Events.

Table 24-1. Event Input Action

Action	CHCTRLB.EVACT	CHCTRLB.TRIGSRC
None	NOACT	-
Normal Transfer	TRIG	DISABLE
Conditional Transfer on Strobe	TRIG	any peripheral
Conditional Transfer	CTRIG	
Conditional Block Transfer	CBLOCK	
Channel Suspend	SUSPEND	
Channel Resume	RESUME	
Skip Next Block Suspend	SSKIP	

Normal Transfer

The event input is used to trigger a beat or burst transfer on peripherals.

The event is acknowledged as soon as the event is received. When received, both the Channel Pending status bit in the Channel Status register (CHSTATUS.PEND) and the corresponding Channel n bit in the Pending Channels register (24.6.13 PENDCH.PENDCHn) are set. If the event is received while the channel is pending, the event trigger is lost.

The figure below shows an example where beat transfers are enabled by internal events.

Figure 24-11. Beat Event Trigger Action

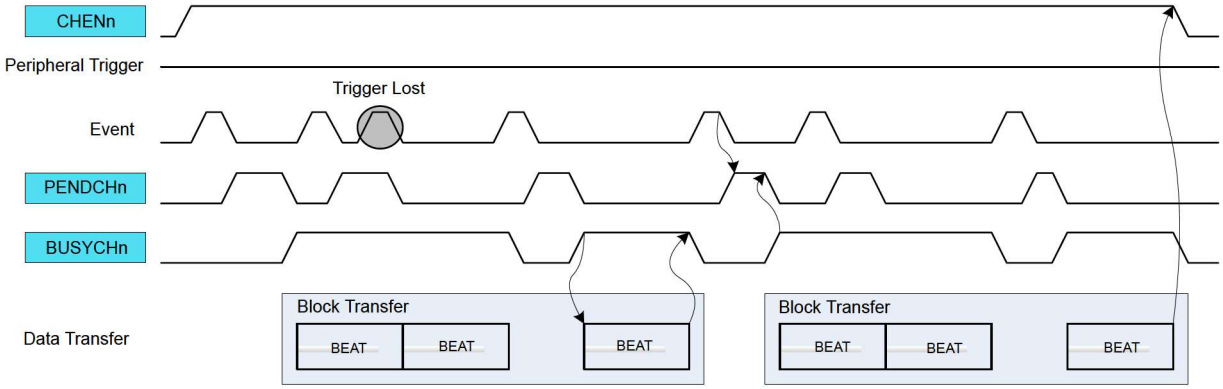

Conditional Transfer on Strobe

The event input is used to trigger a transfer on peripherals with pending transfer requests. This event action is intended to be used with peripheral triggers, e.g. for timed communication protocols or periodic transfers between peripherals: only when the peripheral trigger coincides with the occurrence of a (possibly cyclic) event the transfer is issued.

The event is acknowledged as soon as the event is received. The peripheral trigger request is stored internally when the previous trigger action is completed (i.e. the channel is not pending) and when an active event is received. If the peripheral trigger is active, the DMA will wait for an event before the peripheral trigger is internally registered. When both event and peripheral transfer trigger are active, both CHSTATUS.PEND and 24.6.13 PENDCH.PENDCHn are set. A software trigger will now trigger a transfer.

The figure below shows an example where the peripheral beat transfer is started by a conditional strobe event action.

Figure 24-12. Periodic Event with Beat Peripheral Triggers

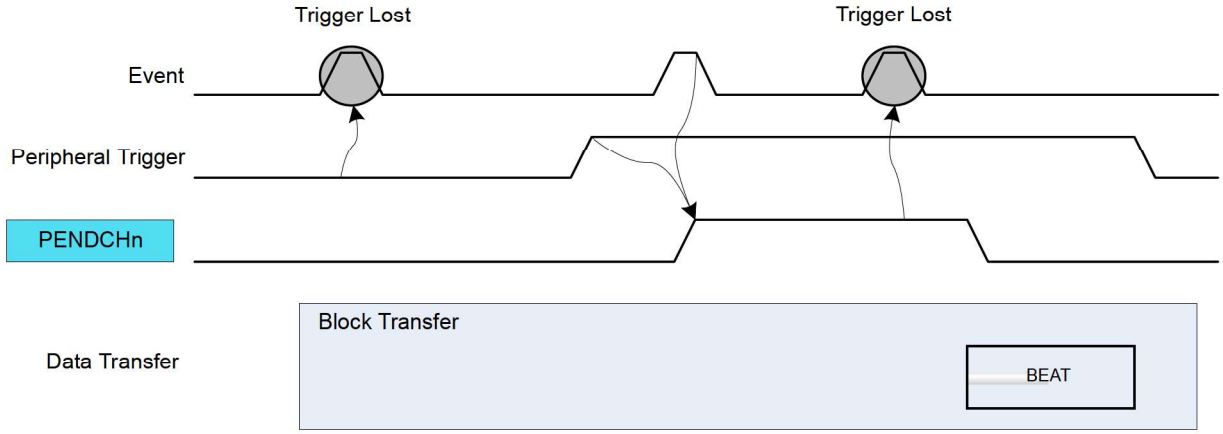

Conditional Transfer

The event input is used to trigger a conditional transfer on peripherals with pending transfer requests. For example, this type of event can be used for peripheral-to-peripheral transfers, where one peripheral is the source of event and the second peripheral is the source of the trigger.

Each peripheral trigger is stored internally when the event is received. When the peripheral trigger is stored internally, the Channel Pending status bit is set (CHSTATUS.PEND), the respective Pending Channel n Bit in the Pending Channels register is set (24.6.13 PENDCH.PENDCHn), and the event is acknowledged. A software trigger will now trigger a transfer.

The figure below shows an example where conditional event is enabled with peripheral beat trigger requests.

Figure 24-13. Conditional Event with Beat Peripheral Triggers

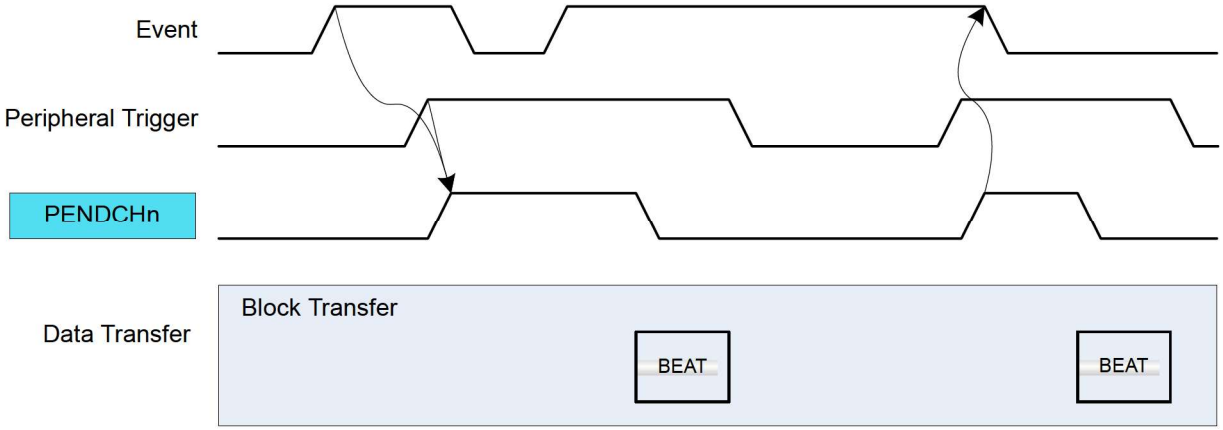

Conditional Block Transfer

The event input is used to trigger a conditional block transfer on peripherals.

Before starting transfers within a block, an event must be received. When received, the event is acknowledged when the block transfer is completed. A software trigger will trigger a transfer.

The figure below shows an example where conditional event block transfer is started with peripheral beat trigger requests.

Figure 24-14. Conditional Block Transfer with Beat Peripheral Triggers

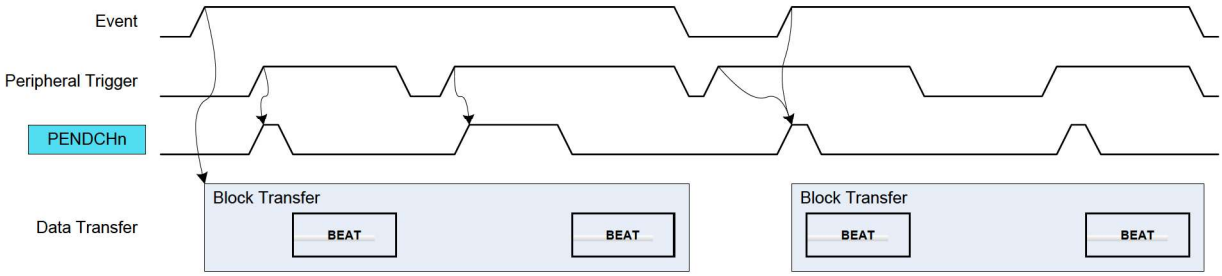

Channel Suspend

The event input is used to suspend an ongoing channel operation. The event is acknowledged when the current AHB access is completed. For further details on Channel Suspend, refer to 24.5.3.2 Channel Suspend.

Channel Resume

The event input is used to resume a suspended channel operation. The event is acknowledged as soon as the event is received and the Channel Suspend Interrupt Flag (CHINTFLAG.SUSP) is cleared. For further details refer to 24.5.3.2 Channel Suspend.

Skip Next Block Suspend

This event can be used to skip the next block suspend action. If the channel is suspended before the event rises, the channel operation is resumed and the event is acknowledged. If the event rises before a suspend block action is detected, the event is kept until the next block suspend detection. When the block transfer is completed, the channel continues the operation (not suspended) and the event is acknowledged.

24.5.3.5 Event Output Selection

Event output selection is available only for the least significant DMA channels. The pulse width of an event output from a channel is one AHB clock cycle.

The output of channel events is enabled by writing a '1' to the Channel Event Output Enable bit in the Control B register (CHCTRLB.EVOE). The event output cause is selected by writing to the Event Output Selection bits in the

Block Transfer Control register (BTCTRL.EVOSEL). It is possible to generate events after each block transfer (BTCTRL.EVOSEL=0x1) or beat transfer (BTCTRL.EVOSEL=0x3). To enable an event being generated when a transaction is complete, the block event selection must be set in the last transfer descriptor only.

Figure 24-15 shows an example where the event output generation is enabled in the first block transfer, and disabled in the second block.

Figure 24-15. Event Output Generation

Beat Event Output

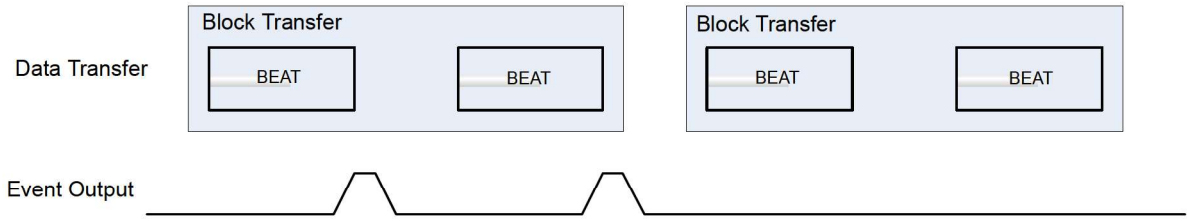

Block Event Output

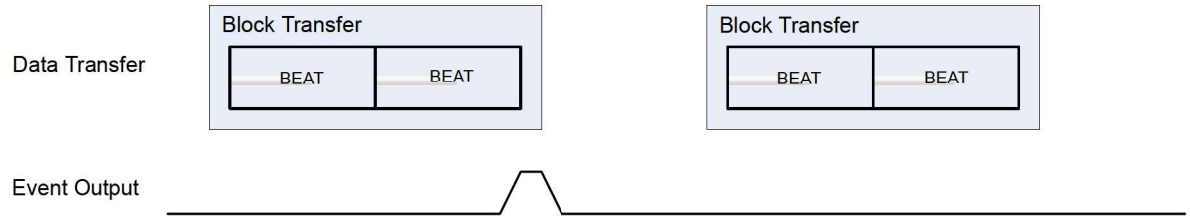

24.5.3.6 Aborting Transfers

Transfers on any channel can be aborted gracefully by software by disabling the corresponding DMA channel. It is also possible to abort all ongoing or pending transfers by disabling the DMAC.

When a DMA channel disable request or DMAC disable request is detected:

- Ongoing transfers of the active channel will be disabled when the ongoing beat transfer is completed and the write-back memory section is updated. This prevents transfer corruption before the channel is disabled.
- All other enabled channels will be disabled in the next clock cycle.

The corresponding Channel Enable bit in the Channel Control A register is cleared (CHCTRLA.ENABLE=0) when the channel is disabled.

The corresponding DMAC Enable bit in the Control register is cleared (CTRL.DMAENABLE=0) when the entire DMAC module is disabled.

24.5.3.7 CRC Operation

A cyclic redundancy check (CRC) is an error detection technique used to find errors in data. It is commonly used to determine whether the data during a transmission, or data present in data and program memories has been corrupted or not. A CRC takes a data stream or a block of data as input and generates a 16- or 32-bit output that can be appended to the data and used as a checksum.

When the data is received, the device or application repeats the calculation: If the new CRC result does not match the one calculated earlier, the block contains a data error. The application will then detect this and may take a corrective action, such as requesting the data to be sent again or simply not using the incorrect data.

The CRC engine in DMAC supports two commonly used CRC polynomials: CRC-16 (CRC-CCITT) and CRC-32 (IEEE 802.3). Typically, applying CRC-n (CRC-16 or CRC-32) to a data block of arbitrary length will detect any single alteration that is ≤n bits in length, and will detect the fraction 1-2-n of all longer error bursts.

- CRC-16:

  - Polynomial: $x^{16}+ x^{12}+ x^5+ 1$
  - Hex value: 0x1021
- CRC-32:
  - Polynomial: $x^{32}+x^{26}+ x^{23}+ x^{22}+x^{16}+ x^{12}+ x^{11}+ x^{10}+ x^8+ x^7+ x^5+ x^4+ x^2+ x + 1$
  - Hex value: 0x04C11DB7

The data source for the CRC engine can either be one of the DMA channels or the APB bus interface, and must be selected by writing to the CRC Input Source bits in the CRC Control register (CRCCTRL.CRCSRC). The CRC engine then takes data input from the selected source and generates a checksum based on these data. The checksum is available in the CRC Checksum register (CRCCHKSUM). When CRC-32 polynomial is used, the final checksum read is bit reversed and complemented, as shown in Figure 24-16.

The CRC polynomial is selected by writing to the CRC Polynomial Type bit in the CRC Control register (CRCCTRL.CRCPOLY), the default is CRC-16. The CRC engine operates on byte only. When the DMA is used as data source for the CRC engine, the DMA channel beat size setting will be used. When used with APB bus interface, the application must select the CRC Beat Size bit field of CRC Control register (CRCCTRL.CRCBEATSIZE). 8-, 16-, or 32-bit bus transfer access type is supported. The corresponding number of bytes will be written in the CRCDATAIN register and the CRC engine will operate on the input data in a byte by byte manner.

Figure 24-16. CRC Generator Block Diagram

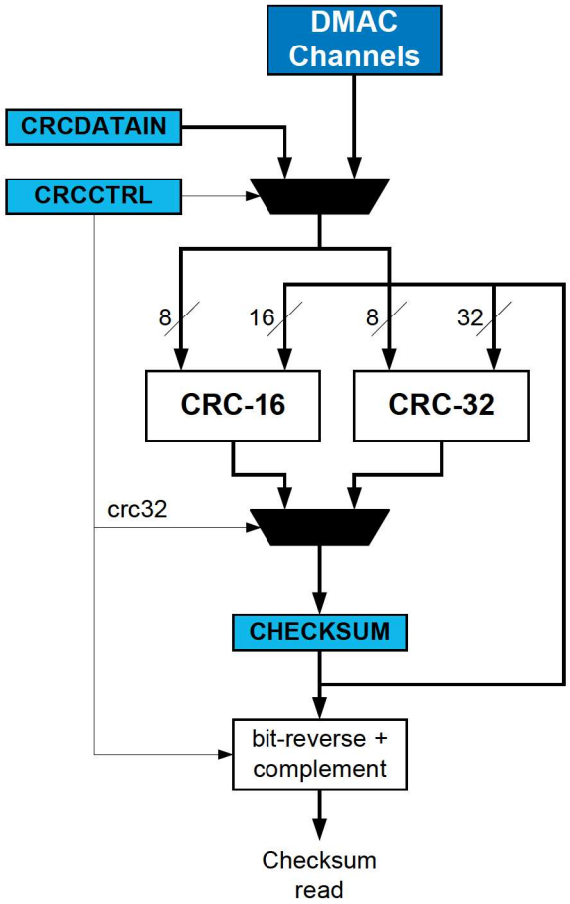

CRC on DMA data

CRC-16 or CRC-32 calculations can be performed on data passing through any DMA channel. Once a DMA channel is selected as the source, the CRC engine will continuously generate the CRC on the data passing through the DMA channel. The checksum is available for readout once the DMA transaction is completed or aborted. A CRC can also be generated on SRAM, Flash, or I/O memory by passing these data through a DMA channel. If the latter is done, the destination register for the DMA data can be the data input (CRCDATAIN) register in the CRC engine.

CRC using the I/O interface	Before using the CRC engine with the I/O interface, the application must set the CRC Beat Size bits in the CRC Control register (CRCCTRL.CRCBEATSIZE). 8/16/32-bit bus transfer type can be selected.

CRC can be performed on any data by loading them into the CRC engine using the CPU and writing the data to the CRCDATAIN register. Using this method, an arbitrary number of bytes can be written to the register by the CPU, and CRC is done continuously for each byte. This means if a 32-bit data is written to the CRCDATAIN register the CRC engine takes four cycles to calculate the CRC. The CRC complete is signaled by a set CRCBUSY bit in the CRCSTATUS register. New data can be written only when CRCBUSY flag is not set.

24.5.4 Interrupts

The DMAC channels have the following interrupt sources:

- Transfer Complete (TCMPL): Indicates that a block transfer is completed on the corresponding channel. Refer to 24.5.2.5 Data Transmission for details.
- Transfer Error (TERR): Indicates that a bus error has occurred during a burst transfer, or that an invalid descriptor has been fetched. Refer to 24.5.2.8 Error Handling for details.
- Channel Suspend (SUSP): Indicates that the corresponding channel has been suspended. Refer to 24.5.3.2 Channel Suspend and 24.5.2.5 Data Transmission for details.

Each interrupt source has an interrupt flag associated with it. The interrupt flag in the Channel Interrupt Flag Status and Clear (CHINTFLAG) register is set when the interrupt condition occurs. Each interrupt can be individually enabled by setting the corresponding bit in the Channel Interrupt Enable Set register (CHINTENSET=1), and disabled by setting the corresponding bit in the Channel Interrupt Enable Clear register (CHINTENCLR=1).

An interrupt request is generated when the interrupt flag is set and the corresponding interrupt is enabled. The interrupt request remains active until the interrupt flag is cleared, the interrupt is disabled, the DMAC is reset or the corresponding DMA channel is reset. See CHINTFLAG for details on how to clear interrupt flags. All interrupt requests are ORed together on system level to generate one combined interrupt request to the NVIC.

The user must read the Channel Interrupt Status (INTSTATUS) register to identify the channels with pending interrupts and must read the Channel Interrupt Flag Status and Clear (CHINTFLAG) register to determine which interrupt condition is present for the corresponding channel. It is also possible to read the Interrupt Pending register (INTPEND), which provides the lowest channel number with pending interrupt and the respective interrupt flags.

Note: Interrupts must be globally enabled for interrupt requests to be generated.

24.5.5 Events

The DMAC can generate the following output events:

- Channel (CH): Generated when a block transfer for a given channel has been completed, or when a beat transfer within a block transfer for a given channel has been completed. Refer to 28. Event System (EVSYS) for details.

Setting the Channel Event Output Enable bit (CHEVCTRLx.EVOE = 1) enables the corresponding output event configured in the Event Output Selection bit group in the Block Transfer Control register (BTCTRL.EVOSEL). Clearing CHEVCTRLx.EVOE = 0 disables the corresponding output event.

The DMAC can take the following actions on an input event:

- Transfer and Periodic Transfer Trigger (TRIG): normal transfer or periodic transfers on peripherals are enabled
- Conditional Transfer Trigger (CTRIG): conditional transfers on peripherals are enabled
- Conditional Block Transfer Trigger (CBLOCK): conditional block transfers on peripherals are enabled
- Channel Suspend Operation (SUSPEND): suspend a channel operation
- Channel Resume Operation (RESUME): resume a suspended channel operation
- Skip Next Block Suspend Action (SSKIP): skip the next block suspend transfer condition
- Increase Priority (INCPRI): increase channel priority

Setting the Channel Event Input Enable bit (CHEVCTRLx.EVIE = 1) enables the corresponding action on input event. Clearing this bit disables the corresponding action on input event. Note that several actions can be enabled for incoming events. If several events are connected to the peripheral, any enabled action will be taken for any of the incoming events. For further details on event input actions, refer to Event Input Actions.

Note: Event input and outputs are not available for every channel. Refer to the Features section for more information.

24.5.6 Sleep Mode Operation

Each DMA channel can be configured to operate in any sleep mode. To be able to run in standby, the RUNSTDBY bit in Channel Control A register (CHCTRLA.RUNSTDBY) must be written to '1'. The DMAC can wake up the device using interrupts from any sleep mode or perform actions through the Event System.

For channels with CHCTRLA.RUNSTDBY = 0, it is up to software to stop DMA transfers on these channels and wait for completion before going to Standby mode using the following sequence:

1. Suspend the DMAC channels for which CHCTRLA.RUNSTDBY = 0.
2. Check the SYNCBUSY bits of registers accessed by the DMAC channels being suspended.
3. Go to sleep.
4. When the device wakes up, resume the suspended channels.

Notes:

1. In Standby Sleep mode, the DMAC can only access RAM when it is not back biased (PM.STDBYCFG.BBIASxx = 0x0).
2. When the device is in Standby Sleep mode, the DMAC cannot write the following peripheral registers. To write these registers with the DMAC the device must be in active or idle modes.
   ADC: SWTRIG

   RTC: COUNT

   TC: CTRLB, STATUS, COUNTH, COUNTL, PER, PERBUF, CC, CCBUF

   TCC: CTRLB, STATUS, COUNT, PATT, WAVE, PER, PERBUF, CC, CCBUF

   SDADC: SWTRIG

24.6 Register Summary

Offset	Name	Bit Pos.	7	6	5	4	3	2	1	0
0x00	CTRL	7:0						CRCENABLE	DMAENABLE	SWRST
		15:8					LVLEN3	LVLEN2	LVLEN1	LVLEN0
0x02	CRCCTRL	7:0					CRCPOLY[1:0]		CRCBEATSIZE[1:0]	
		15:8			CRCSRC[5:0]					
0x04	CRCDATAIN	7:0	CRCDATAIN[7:0]							
		15:8	CRCDATAIN[15:8]							
		23:16	CRCDATAIN[23:16]							
		31:24	CRCDATAIN[31:24]							
0x08	CRCCHKSUM	7:0	CRCCHKSUM[7:0]							
		15:8	CRCCHKSUM[15:8]							
		23:16	CRCCHKSUM[23:16]							
		31:24	CRCCHKSUM[31:24]							
0x0C	CRCSTATUS	7:0							CRCZERO	CRCBUSY
0x0D	DBGCTRL	7:0								DBGRUN
0x0E	QOSCTRL	7:0			DQOS[1:0]		FQOS[1:0]		WRBQOS[1:0]	
0x0F	Reserved									
0x10	SWTRIGCTRL	7:0	SWTRIG7	SWTRIG6	SWTRIG5	SWTRIG4	SWTRIG3	SWTRIG2	SWTRIG1	SWTRIG0
		15:8					SWTRIG11	SWTRIG10	SWTRIG9	SWTRIG8
		23:16								
		31:24								
0x14	PRICTRL0	7:0	RRLVLEN0				LVLPRI0[3:0]			
		15:8	RRLVLEN1				LVLPRI1[3:0]			
		23:16	RRLVLEN2				LVLPRI2[3:0]			
		31:24	RRLVLEN3				LVLPRI3[3:0]			
0x18 ... 0x1F	Reserved									
0x20	INTPEND	7:0					ID[3:0]			
		15:8	PEND	BUSY	FERR			SUSP	TCMPL	TERR
0x22 ... 0x23	Reserved									
0x24	INTSTATUS	7:0	CHINT7	CHINT6	CHINT5	CHINT4	CHINT3	CHINT2	CHINT1	CHINT0
		15:8					CHINT11	CHINT10	CHINT9	CHINT8
		23:16								
		31:24								
0x28	BUSYCH	7:0	BUSYCH7	BUSYCH6	BUSYCH5	BUSYCH4	BUSYCH3	BUSYCH2	BUSYCH1	BUSYCH0
		15:8					BUSYCH11	BUSYCH10	BUSYCH9	BUSYCH8
		23:16								
		31:24								
0x2C	PENDCH	7:0	PENDCH7	PENDCH6	PENDCH5	PENDCH4	PENDCH3	PENDCH2	PENDCH1	PENDCH0
		15:8					PENDCH11	PENDCH10	PENDCH9	PENDCH8
		23:16								
		31:24								
0x30	ACTIVE	7:0					LVLEX3	LVLEX2	LVLEX1	LVLEX0
		15:8	ABUSY			ID[4:0]				
		23:16	BTCNT[7:0]							
		31:24	BTCNT[15:8]							
0x34	BASEADDR	7:0	BASEADDR[7:0]							
		15:8	BASEADDR[15:8]							
		23:16	BASEADDR[23:16]							
		31:24	BASEADDR[31:24]							
0x38	WRBADDR	7:0	WRBADDR[7:0]							
		15:8	WRBADDR[15:8]							
		23:16	WRBADDR[23:16]							
		31:24	WRBADDR[31:24]							

.....continued

Offset	Name	Bit Pos.	7	6	5	4	3	2	1	0
0x3C ... 0x3E	Reserved									
0x3F	CHID	7:0					ID[3:0]			
0x40	CHCTRLA	7:0		RUNSTDBY					ENABLE	SWRST
0x41 ... 0x43	Reserved									
0x44	CHCTRLB	7:0		LVL[1:0]		EVOE	EVIE	EVACT[2:0]		
		15:8			TRIGSRC[5:0]					
		23:16	TRIGACT[1:0]							
		31:24							CMD[1:0]	
0x48 ... 0x4B	Reserved									
0x4C	CHINTENCLR	7:0						SUSP	TCMPL	TERR
0x4D	CHINTENSET	7:0						SUSP	TCMPL	TERR
0x4E	CHINTFLAG	7:0						SUSP	TCMPL	TERR
0x4F	CHSTATUS	7:0						FERR	BUSY	PEND

24.6.1 Control

Name: CTRL
Offset: 0x00
Reset: 0x00X0
Property: PAC Write-Protection, Enable-Protected Bits

Bit	15	14	13	12	11	10	9	8
					LVLEN3	LVLEN2	LVLEN1	LVLEN0
Access					R/W	R/W	R/W	R/W
Reset					0	0	0	0

Bit	7	6	5	4	3	2	1	0
						CRCENABLE	DMAENABLE	SWRST
Access						R/W	R/W	R/W
Reset						0	0	0

Bits 8, 9, 10, 11 – LVLENx Priority Level x Enable [x = 3..0]
When this bit is set, all requests with the corresponding level will be fed into the arbiter block. When cleared, all requests with the corresponding level will be ignored.
For details on arbitration schemes, refer to the Arbitration section.
Note: This bit is not enable-protected.

Value	Description
0	Transfer requests for Priority level x will not be handled.
1	Transfer requests for Priority level x will be handled.

Bit 2 – CRCENABLE CRC Enable
Writing a '0' to this bit will disable the CRC calculation when the CRC Status Busy flag is cleared (CRCSTATUS. CRCBUSY). The bit is zero when the CRC is disabled.
Writing a '1' to this bit will enable the CRC calculation.
Note: This bit is not enable-protected.

Value	Description
0	The CRC calculation is disabled.
1	The CRC calculation is enabled.

Bit 1 – DMAENABLE DMA Enable
Setting this bit will enable the DMA module.
Writing a '0' to this bit will disable the DMA module. When writing a '0' during an ongoing transfer, the bit will not be cleared until the internal data transfer buffer is empty and the DMA transfer is aborted. The internal data transfer buffer will be empty once the ongoing burst transfer is completed.
Note: This bit is not enable-protected.

Value	Description
0	The peripheral is disabled.
1	The peripheral is enabled.

Bit 0 – SWRST Software Reset
Writing a '0' to this bit has no effect.
Writing a '1' to this bit when both the DMAC and the CRC module are disabled (DMAENABLE and CRCENABLE are '0') resets all registers in the DMAC (except DBGCTRL) to their initial state. If either the DMAC or CRC module is enabled, the Reset request will be ignored and the DMAC will return an access error.

Value	Description
0	There is no Reset operation ongoing.
1	A Reset operation is ongoing.

24.6.2 CRC Control

Name: CRCCTRL
Offset: 0x02
Reset: 0x0000
Property: PAC Write-Protection, Enable-Protected

Bit	15	14	13	12	11	10	9	8
			CRCSRC[5:0]					
Access			R/W	R/W	R/W	R/W	R/W	R/W
Reset			0	0	0	0	0	0

Bit	7	6	5	4	3	2	1	0
					CRCPOLY[1:0]		CRCBEATSIZE[1:0]	
Access					R/W	R/W	R/W	R/W
Reset					0	0	0	0

Bits 13:8 – CRCSRC[5:0] CRC Input Source
These bits select the input source for generating the CRC, as shown in the table below. The selected source is locked until either the CRC generation is completed or the CRC module is disabled. This means the CRCSRC cannot be modified when the CRC operation is ongoing. The lock is signaled by the CRCBUSY status bit. CRC generation complete is generated and signaled from the selected source when used with the DMA channel.

Value	Name	Description
0x00	NOACT	No action
0x01	IO	I/O interface
0x02-0x1F	-	Reserved
0x20	CHN0	DMA channel 0
0x21	CHN1	DMA channel 1
0x22	CHN2	DMA channel 2
0x23	CHN3	DMA channel 3
0x24	CHN4	DMA channel 4
0x25	CHN5	DMA channel 5
0x26	CHN6	DMA channel 6
0x27	CHN7	DMA channel 7
0x28	CHN8	DMA channel 8
0x29	CHN9	DMA channel 9
0x2A	CHN10	DMA channel 10
0x2B	CHN11	DMA channel 11

Bits 3:2 – CRCPOLY[1:0] CRC Polynomial Type
These bits define the size of the data transfer for each bus access when the CRC is used with I/O interface, as shown in the table below.

Value	Name	Description
0x0	CRC16	CRC-16 (CRC-CCITT)
0x1	CRC32	CRC32 (IEEE 802.3)
0x2-0x3		Reserved

Bits 1:0 – CRCBEATSIZE[1:0] CRC Beat Size
These bits define the size of the data transfer for each bus access when the CRC is used with I/O interface.

Value	Name	Description
0x0	BYTE	8-bit bus transfer
0x1	HWORD	16-bit bus transfer
0x2	WORD	32-bit bus transfer
0x3		Reserved

24.6.3 CRC Data Input

Name: CRCDATAIN
Offset: 0x04
Reset: 0x00000000
Property: PAC Write-Protection

Bit	31	30	29	28	27	26	25	24
	CRCDATAIN[31:24]							
Access	R/W	R/W	R/W	R/W	R/W	R/W	R/W	R/W
Reset	0	0	0	0	0	0	0	0

Bit	23	22	21	20	19	18	17	16
	CRCDATAIN[23:16]							
Access	R/W	R/W	R/W	R/W	R/W	R/W	R/W	R/W
Reset	0	0	0	0	0	0	0	0

Bit	15	14	13	12	11	10	9	8
	CRCDATAIN[15:8]							
Access	R/W	R/W	R/W	R/W	R/W	R/W	R/W	R/W
Reset	0	0	0	0	0	0	0	0

Bit	7	6	5	4	3	2	1	0
	CRCDATAIN[7:0]							
Access	R/W	R/W	R/W	R/W	R/W	R/W	R/W	R/W
Reset	0	0	0	0	0	0	0	0

Bits 31:0 – CRCDATAIN[31:0] CRC Data Input
These bits store the data for which the CRC checksum is computed. A new CRC Checksum is ready (CRCBEAT+ 1) clock cycles after the CRCDATAIN register is written.

24.6.4 CRC Checksum

Name: CRCCHKSUM
Offset: 0x08
Reset: 0x00000000
Property: PAC Write-Protection, Enable-Protected

The CRCCHKSUM represents the 16- or 32-bit checksum value and the generated CRC. The register is reset to zero by default, but it is possible to reset all bits to one by writing the CRCCHKSUM register directly. It is possible to write this register only when the CRC module is disabled. If CRC-32 is selected and the CRC Status Busy flag is cleared (i.e., CRC generation is completed or aborted), the bit reversed (bit 31 is swapped with bit 0, bit 30 with bit 1, etc.) and complemented result will be read from CRCCHKSUM. If CRC-16 is selected or the CRC Status Busy flag is set (i.e., CRC generation is ongoing), CRCCHKSUM will contain the actual content.

Bit	31	30	29	28	27	26	25	24
	CRCCHKSUM[31:24]							
Access	R/W	R/W	R/W	R/W	R/W	R/W	R/W	R/W
Reset	0	0	0	0	0	0	0	0

Bit	23	22	21	20	19	18	17	16
	CRCCHKSUM[23:16]							
Access	R/W	R/W	R/W	R/W	R/W	R/W	R/W	R/W
Reset	0	0	0	0	0	0	0	0

Bit	15	14	13	12	11	10	9	8
	CRCCHKSUM[15:8]							
Access	R/W	R/W	R/W	R/W	R/W	R/W	R/W	R/W
Reset	0	0	0	0	0	0	0	0

Bit	7	6	5	4	3	2	1	0
	CRCCHKSUM[7:0]							
Access	R/W	R/W	R/W	R/W	R/W	R/W	R/W	R/W
Reset	0	0	0	0	0	0	0	0

Bits 31:0 – CRCCHKSUM[31:0] CRC Checksum
These bits store the generated CRC result. The 16 MSB bits are always read zero when CRC-16 is enabled.

24.6.5 CRC Status

Name: CRCSTATUS
Offset: 0x0C
Reset: 0x00
Property: PAC Write-Protection

Bit	7	6	5	4	3	2	1	0
							CRCZERO	CRCBUSY
Access							R	R/W
Reset							0	0

Bit 1 – CRCZERO CRC Zero
This bit is cleared when a new CRC source is selected.
This bit is set when the CRC generation is complete and the CRC Checksum is zero.
When running CRC-32 and appending the checksum at the end of the packet (as little endian), the final checksum should be 0x2144df1c, and not zero. However, if the checksum is complemented before it is appended (as little endian) to the data, the final result in the checksum register will be zero. See the description of CRCCHKSUM to read out different versions of the checksum.

Bit 0 – CRCBUSY CRC Module Busy
This flag is cleared by writing a one to it when used with I/O interface. When used with a DMA channel, the bit is set when the corresponding DMA channel is enabled, and cleared when the corresponding DMA channel is disabled. This register bit cannot be cleared by the application when the CRC is used with a DMA channel.
This bit is set when a source configuration is selected and as long as the source is using the CRC module.

24.6.6 Debug Control

Name: DBGCTRL
Offset: 0x0D
Reset: 0x00
Property: PAC Write-Protection

Bit	7	6	5	4	3	2	1	0
								DBGRUN
Access								R/W
Reset								0

Bit 0 – DBGRUN Debug Run
This bit is reset by a software reset.
This bit controls the functionality when the CPU is halted by an external debugger.

Value	Description
0	The DMAC is halted when the CPU is halted by an external debugger.
1	The DMAC continues normal operation when the CPU is halted by an external debugger.

24.6.7 Quality of Service Control

Name: QOSCTRL
Offset: 0x0E
Reset: 0x2A
Property: PAC Write-Protection

Bit	7	6	5	4	3	2	1	0
			DQOS[1:0]		FQOS[1:0]		WRBQOS[1:0]	
Access			R/W	R/W	R/W	R/W	R/W	R/W
Reset			1	0	1	0	1	0

Bits 5:4 – DQOS[1:0] Data Transfer Quality of Service
These bits define the memory priority access during the data transfer operation.

DQOS[1:0]	Name	Description
0x0	DISABLE	Background (no sensitive operation)
0x1	LOW	Sensitive Bandwidth
0x2	MEDIUM	Sensitive Latency
0x3	HIGH	Critical Latency

Bits 3:2 – FQOS[1:0] Fetch Quality of Service
These bits define the memory priority access during the fetch operation.

FQOS[1:0]	Name	Description
0x0	DISABLE	Background (no sensitive operation)
0x1	LOW	Sensitive Bandwidth
0x2	MEDIUM	Sensitive Latency
0x3	HIGH	Critical Latency

Bits 1:0 – WRBQOS[1:0] Write-Back Quality of Service
These bits define the memory priority access during the write-back operation.

WRBQOS[1:0]	Name	Description
0x0	DISABLE	Background (no sensitive operation)
0x1	LOW	Sensitive Bandwidth
0x2	MEDIUM	Sensitive Latency
0x3	HIGH	Critical Latency

24.6.8 Software Trigger Control

Name: SWTRIGCTRL
Offset: 0x10
Reset: 0x00000000
Property: PAC Write-Protection

Bit	31	30	29	28	27	26	25	24
Access								
Reset								

Bit	23	22	21	20	19	18	17	16
Access								
Reset								

Bit	15	14	13	12	11	10	9	8
					SWTRIG11	SWTRIG10	SWTRIG9	SWTRIG8
Access					R/W	R/W	R/W	R/W
Reset					0	0	0	0

Bit	7	6	5	4	3	2	1	0
	SWTRIG7	SWTRIG6	SWTRIG5	SWTRIG4	SWTRIG3	SWTRIG2	SWTRIG1	SWTRIG0
Access	R/W	R/W	R/W	R/W	R/W	R/W	R/W	R/W
Reset	0	0	0	0	0	0	0	0

Bits 0, 1, 2, 3, 4, 5, 6, 7, 8, 9, 10, 11 – SWTRIGx Channel x Software Trigger [x = 11..0]
This bit is cleared when the Channel Pending bit in the Channel Status register (CHSTATUS.PEND) for the corresponding channel is either set, or by writing a '1' to it.
This bit is set if CHSTATUS.PEND is already '1' when writing a '1' to that bit.
Writing a '0' to this bit will clear the bit.
Writing a '1' to this bit will generate a DMA software trigger on channel x, if CHSTATUS.PEND=0 for channel x.
CHSTATUS.PEND will be set and SWTRIGx will remain cleared.

24.6.9 Priority Control 0

Name: PRICTRL0
Offset: 0x14
Reset: 0x00000000
Property: PAC Write-Protection

Bit	31	30	29	28	27	26	25	24
	RRLVLEN3				LVLPRI3[3:0]			
Access	R/W				R/W	R/W	R/W	R/W
Reset	0				0	0	0	0

Bit	23	22	21	20	19	18	17	16
	RRLVLEN2				LVLPRI2[3:0]			
Access	R/W				R/W	R/W	R/W	R/W
Reset	0				0	0	0	0

Bit	15	14	13	12	11	10	9	8
	RRLVLEN1				LVLPRI1[3:0]			
Access	R/W				R/W	R/W	R/W	R/W
Reset	0				0	0	0	0

Bit	7	6	5	4	3	2	1	0
	RRLVLEN0				LVLPRI0[3:0]			
Access	R/W				R/W	R/W	R/W	R/W
Reset	0				0	0	0	0

Bit 31 – RRLVLEN3 Level 3 Round-Robin Arbitration Enable
This bit controls which arbitration scheme is selected for DMA channels with priority level 3. For details on arbitration schemes, refer to 24.5.2.4 Arbitration.

Value	Description
0	Static arbitration scheme for channels with level 3 priority.
1	Round-robin arbitration scheme for channels with level 3 priority.

Bits 27:24 – LVLPRI3[3:0] Level 3 Channel Priority Number
When round-robin arbitration is enabled (PRICTRL0.RRLVLEN3=1) for priority level 3, this register holds the channel number of the last DMA channel being granted access as the active channel with priority level 3.
When static arbitration is enabled (PRICTRL0.RRLVLEN3=0) for priority level 3, and the value of this bit group is non-zero, it will not affect the static priority scheme.
This bit group is not reset when round-robin arbitration gets disabled (PRICTRL0.RRLVLEN3 written to '0').

Bit 23 – RRLVLEN2 Level 2 Round-Robin Arbitration Enable
This bit controls which arbitration scheme is selected for DMA channels with priority level 2. For details on arbitration schemes, refer to 24.5.2.4 Arbitration.

Value	Description
0	Static arbitration scheme for channels with level 2 priority.
1	Round-robin arbitration scheme for channels with level 2 priority.

Bits 19:16 – LVLPRI2[3:0] Level 2 Channel Priority Number
When round-robin arbitration is enabled (PRICTRL0.RRLVLEN2=1) for priority level 2, this register holds the channel number of the last DMA channel being granted access as the active channel with priority level 2.
When static arbitration is enabled (PRICTRL0.RRLVLEN2=0) for priority level 2, and the value of this bit group is non-zero, it will not affect the static priority scheme.
This bit group is not reset when round-robin arbitration gets disabled (PRICTRL0.RRLVLEN2 written to '0').

Bit 15 – RRLVLEN1 Level 1 Round-Robin Scheduling Enable
For details on arbitration schemes, refer to 24.5.2.4 Arbitration.

Value	Description
0	Static arbitration scheme for channels with level 1 priority.
1	Round-robin arbitration scheme for channels with level 1 priority.

Bits 11:8 – LVLPRI1[3:0] Level 1 Channel Priority Number
When round-robin arbitration is enabled (PRICTRL0.RRLVLEN1=1) for priority level 1, this register holds the channel number of the last DMA channel being granted access as the active channel with priority level 1.
When static arbitration is enabled (PRICTRL0.RRLVLEN1=0) for priority level 1, and the value of this bit group is non-zero, it will not affect the static priority scheme.
This bit group is not reset when round-robin arbitration gets disabled (PRICTRL0.RRLVLEN1 written to '0').

Bit 7 – RRLVLEN0 Level 0 Round-Robin Scheduling Enable
For details on arbitration schemes, refer to 24.5.2.4 Arbitration.

Value	Description
0	Static arbitration scheme for channels with level 0 priority.
1	Round-robin arbitration scheme for channels with level 0 priority.

Bits 3:0 – LVLPRI0[3:0] Level 0 Channel Priority Number
When round-robin arbitration is enabled (PRICTRL0.RRLVLEN0=1) for priority level 0, this register holds the channel number of the last DMA channel being granted access as the active channel with priority level 0.
When static arbitration is enabled (PRICTRL0.RRLVLEN0=0) for priority level 0, and the value of this bit group is non-zero, it will not affect the static priority scheme.
This bit group is not reset when round-robin arbitration gets disabled (PRICTRL0.RRLVLEN0 written to '0').

24.6.10 Interrupt Pending

Name: INTPEND
Offset: 0x20
Reset: 0x0000
Property: -

This register allows the user to identify the lowest DMA channel with pending interrupt.

Bit	15	14	13	12	11	10	9	8
	PEND	BUSY	FERR			SUSP	TCMPL	TERR
Access	R	R	R			R/W	R/W	R/W
Reset	0	0	0			0	0	0

Bit	7	6	5	4	3	2	1	0
					ID[3:0]			
Access					R/W	R/W	R/W	R/W
Reset					0	0	0	0

Bit 15 – PEND Pending
This bit will read '1' when the channel selected by Channel ID field (ID) is pending.

Bit 14 – BUSY Busy
This bit will read '1' when the channel selected by Channel ID field (ID) is busy.

Bit 13 – FERR Fetch Error
This bit will read '1' when the channel selected by Channel ID field (ID) fetched an invalid descriptor.

Bit 10 – SUSP Channel Suspend
This bit will read '1' when the channel selected by Channel ID field (ID) has pending Suspend interrupt.
Writing a '0' to this bit has no effect.
Writing a '1' to this bit will clear the Channel ID (ID) Suspend interrupt flag.

Bit 9 – TCMPL Transfer Complete
This bit will read '1' when the channel selected by Channel ID field (ID) has pending Transfer Complete interrupt.
Writing a '0' to this bit has no effect.
Writing a '1' to this bit will clear the Channel ID (ID) Transfer Complete interrupt flag.

Bit 8 – TERR Transfer Error
This bit is read one when the channel selected by Channel ID field (ID) has pending Transfer Error interrupt.
Writing a '0' to this bit has no effect.
Writing a '1' to this bit will clear the Channel ID (ID) Transfer Error interrupt flag.

Bits 3:0 – ID[3:0] Channel ID
These bits store the lowest channel number with pending interrupts. The number is valid if Suspend (SUSP), Transfer Complete (TCMPL) or Transfer Error (TERR) bits are set. The Channel ID field is refreshed when a new channel (with channel number less than the current one) with pending interrupts is detected, or when the application clears the corresponding channel interrupt sources. When no pending channels interrupts are available, these bits will always return zero value when read.
When the bits are written, indirect access to the corresponding Channel Interrupt Flag register is enabled.

24.6.11 Interrupt Status

Name: INTSTATUS
Offset: 0x24
Reset: 0x00000000
Property: -

Bit	31	30	29	28	27	26	25	24
Access								
Reset								

Bit	23	22	21	20	19	18	17	16
Access								
Reset								

Bit	15	14	13	12	11	10	9	8
					CHINT11	CHINT10	CHINT9	CHINT8
Access					R	R	R	R
Reset					0	0	0	0

Bit	7	6	5	4	3	2	1	0
	CHINT7	CHINT6	CHINT5	CHINT4	CHINT3	CHINT2	CHINT1	CHINT0
Access	R	R	R	R	R	R	R	R
Reset	0	0	0	0	0	0	0	0

Bits 0, 1, 2, 3, 4, 5, 6, 7, 8, 9, 10, 11 – CHINTx Channel x Pending Interrupt [x = 11..0]
This bit is set when Channel x has a pending interrupt/the interrupt request is received.
This bit is cleared when the corresponding Channel x interrupts are disabled or the interrupts sources are cleared.

24.6.12 Busy Channels

Name: BUSYCH
Offset: 0x28
Reset: 0x00000000
Property: -

Bit	31	30	29	28	27	26	25	24
Access								
Reset								

Bit	23	22	21	20	19	18	17	16
Access								
Reset								

Bit	15	14	13	12	11	10	9	8
					BUSYCH11	BUSYCH10	BUSYCH9	BUSYCH8
Access					R	R	R	R
Reset					0	0	0	0

Bit	7	6	5	4	3	2	1	0
	BUSYCH7	BUSYCH6	BUSYCH5	BUSYCH4	BUSYCH3	BUSYCH2	BUSYCH1	BUSYCH0
Access	R	R	R	R	R	R	R	R
Reset	0	0	0	0	0	0	0	0

Bits 0, 1, 2, 3, 4, 5, 6, 7, 8, 9, 10, 11 – BUSYCHx Busy Channel x [x = 11..0]
This bit is cleared when the channel trigger action for DMA channel x is complete, when a bus error for DMA channel x is detected, or when DMA channel x is disabled.
This bit is set when DMA channel x starts a DMA transfer.

24.6.13 Pending Channels

Name: PENDCH
Offset: 0x2C
Reset: 0x00000000
Property: -

Bit	31	30	29	28	27	26	25	24
Access								
Reset								

Bit	23	22	21	20	19	18	17	16
Access								
Reset								

Bit	15	14	13	12	11	10	9	8
					PENDCH11	PENDCH10	PENDCH9	PENDCH8
Access					R	R	R	R
Reset					0	0	0	0

Bit	7	6	5	4	3	2	1	0
	PENDCH7	PENDCH6	PENDCH5	PENDCH4	PENDCH3	PENDCH2	PENDCH1	PENDCH0
Access	R	R	R	R	R	R	R	R
Reset	0	0	0	0	0	0	0	0

Bits 0, 1, 2, 3, 4, 5, 6, 7, 8, 9, 10, 11 – PENDCHx Pending Channel x [x = 11..0]
This bit is cleared when trigger execution defined by channel trigger action settings for DMA channel x is started, when a bus error for DMA channel x is detected or when DMA channel x is disabled. For details on trigger action settings, refer to CHCTRLB.TRIGACT.
This bit is set when a transfer is pending on DMA channel x.

24.6.14 Active Channel and Levels

Name: ACTIVE
Offset: 0x30
Reset: 0x00000000
Property: -

Bit	31	30	29	28	27	26	25	24
	BTCNT[15:8]							
Access	R	R	R	R	R	R	R	R
Reset	0	0	0	0	0	0	0	0

Bit	23	22	21	20	19	18	17	16
	BTCNT[7:0]							
Access	R	R	R	R	R	R	R	R
Reset	0	0	0	0	0	0	0	0

Bit	15	14	13	12	11	10	9	8
	ABUSY			ID[4:0]				
Access	R			R	R	R	R	R
Reset	0			0	0	0	0	0

Bit	7	6	5	4	3	2	1	0
					LVLEX3	LVLEX2	LVLEX1	LVLEX0
Access					R	R	R	R
Reset					0	0	0	0

Bits 31:16 – BTCNT[15:0] Active Channel Block Transfer Count
These bits hold the 16-bit block transfer count of the ongoing transfer. This value is stored in the active channel and written back in the corresponding Write-Back channel memory location when the arbiter grants a new channel access. The value is valid only when the active channel active busy flag (ABUSY) is set.

Bit 15 – ABUSY Active Channel Busy
This bit is cleared when the active transfer count is written back in the write-back memory section.
This bit is set when the next descriptor transfer count is read from the write-back memory section.

Bits 12:8 – ID[4:0] Active Channel ID
These bits hold the channel index currently stored in the active channel registers. The value is updated each time the arbiter grants a new channel transfer access request.

Bits 0, 1, 2, 3 – LVLEXx Level x Channel Trigger Request Executing [x = 3..0]
This bit is set when a level-x channel trigger request is executing or pending.
This bit is cleared when no request is pending or being executed.

24.6.15 Descriptor Memory Section Base Address

Name: BASEADDR
Offset: 0x34
Reset: 0x00000000
Property: PAC Write-Protection, Enable-Protected

Bit	31	30	29	28	27	26	25	24
	BASEADDR[31:24]							
Access	R/W	R/W	R/W	R/W	R/W	R/W	R/W	R/W
Reset	0	0	0	0	0	0	0	0

Bit	23	22	21	20	19	18	17	16
	BASEADDR[23:16]							
Access	R/W	R/W	R/W	R/W	R/W	R/W	R/W	R/W
Reset	0	0	0	0	0	0	0	0

Bit	15	14	13	12	11	10	9	8
	BASEADDR[15:8]							
Access	R/W	R/W	R/W	R/W	R/W	R/W	R/W	R/W
Reset	0	0	0	0	0	0	0	0

Bit	7	6	5	4	3	2	1	0
	BASEADDR[7:0]							
Access	R/W	R/W	R/W	R/W	R/W	R/W	R/W	R/W
Reset	0	0	0	0	0	0	0	0

Bits 31:0 – BASEADDR[31:0] Descriptor Memory Base Address
These bits store the Descriptor memory section base address. The value must be 128-bit aligned.

24.6.16 Write-Back Memory Section Base Address

Name: WRBADDR
Offset: 0x38
Reset: 0x00000000
Property: PAC Write-Protection, Enable-Protected

Bit	31	30	29	28	27	26	25	24
	WRBADDR[31:24]							
Access	R/W	R/W	R/W	R/W	R/W	R/W	R/W	R/W
Reset	0	0	0	0	0	0	0	0

Bit	23	22	21	20	19	18	17	16
	WRBADDR[23:16]							
Access	R/W	R/W	R/W	R/W	R/W	R/W	R/W	R/W
Reset	0	0	0	0	0	0	0	0

Bit	15	14	13	12	11	10	9	8
	WRBADDR[15:8]							
Access	R/W	R/W	R/W	R/W	R/W	R/W	R/W	R/W
Reset	0	0	0	0	0	0	0	0

Bit	7	6	5	4	3	2	1	0
	WRBADDR[7:0]							
Access	R/W	R/W	R/W	R/W	R/W	R/W	R/W	R/W
Reset	0	0	0	0	0	0	0	0

Bits 31:0 – WRBADDR[31:0] Write-Back Memory Base Address
These bits store the Write-Back memory base address. The value must be 128-bit aligned.

24.6.17 Channel ID

Name: CHID
Offset: 0x3F
Reset: 0x00
Property: -

Bit	7	6	5	4	3	2	1	0
					ID[3:0]			
Access					R/W	R/W	R/W	R/W
Reset					0	0	0	0

Bits 3:0 – ID[3:0] Channel ID
These bits define the channel number that will be affected by the channel registers (CH*). Before reading or writing a channel register, the channel ID bit group must be written first.

24.6.18 Channel Control A

Name: CHCTRLA
Offset: 0x40
Reset: 0x00
Property: PAC Write-Protection, Enable-Protected Bits

This register affects the DMA channel that is selected in the Channel ID register (CHID.ID).

Bit	7	6	5	4	3	2	1	0
		RUNSTDBY					ENABLE	SWRST
Access	R	R/W	R	R	R	R	R/W	R/W
Reset	0	0	0	0	0	0	0	0

Bit 6 – RUNSTDBY Channel run in standby
This bit is used to keep the DMAC channel running in standby mode.
Note: This bit is not enable-protected.

Value	Description
0	The DMAC channel is halted in standby.
1	The DMAC channel continues to run in standby.

Bit 1 – ENABLE Channel Enable
Writing a '0' to this bit during an ongoing transfer, the bit will not be cleared until the internal data transfer buffer is empty and the DMA transfer is aborted. The internal data transfer buffer will be empty once the ongoing burst transfer is completed.
Writing a '1' to this bit will enable the DMA channel.
Note: This bit is not enable-protected.

Value	Description
0	DMA channel is disabled.
1	DMA channel is enabled.

Bit 0 – SWRST Channel Software Reset
Writing a '0' to this bit has no effect.
Writing a '1' to this bit resets the channel registers to their initial state. The bit can be set when the channel is disabled (ENABLE=0). Writing a '1' to this bit will be ignored as long as ENABLE=1. This bit is automatically cleared when the reset is completed.

Value	Description
0	There is no reset operation ongoing.
1	The reset operation is ongoing.

24.6.19 Channel Control B

Name: CHCTRLB
Offset: 0x44
Reset: 0x00000000
Property: PAC Write-Protection, Enable-Protected Bits

This register affects the DMA channel that is selected in the Channel ID register (CHID.ID).

Bit	31	30	29	28	27	26	25	24
							CMD[1:0]	
Access							R/W	R/W
Reset							0	0

Bit	23	22	21	20	19	18	17	16
	TRIGACT[1:0]							
Access	R/W	R/W						
Reset	0	0						

Bit	15	14	13	12	11	10	9	8
			TRIGSRC[5:0]					
Access			R/W	R/W	R/W	R/W	R/W	R/W
Reset			0	0	0	0	0	0

Bit	7	6	5	4	3	2	1	0
		LVL[1:0]		EVOE	EVIE	EVACT[2:0]		
Access		R/W	R/W	R/W	R/W	R/W	R/W	R/W
Reset		0	0	0	0	0	0	0

Bits 25:24 – CMD[1:0] Software Command
These bits define the software commands. Refer to 24.5.3.2 Channel Suspend and 24.5.3.3 Channel Resume and Next Suspend Skip.
Note: This bit field is not enable-protected.

CMD[1:0]	Name	Description
0x0	NOACT	No action
0x1	SUSPEND	Channel suspend operation
0x2	RESUME	Channel resume operation
0x3	-	Reserved

Bits 23:22 – TRIGACT[1:0] Trigger Action
These bits define the trigger action used for a transfer.
Note: This bit field is enable-protected.

TRIGACT[1:0]	Name	Description
0x0	BLOCK	One trigger required for each block transfer
0x1	-	Reserved
0x2	BEAT	One trigger required for each beat transfer
0x3	TRANSACTION	One trigger required for each transaction

Bits 13:8 – TRIGSRC[5:0] Trigger Source
These bits define the peripheral trigger which is source of the transfer. For details on trigger selection and trigger modes, refer to Transfer Triggers and Actions and CHCTRLB.TRIGACT.

Table 24-2. Peripheral Trigger Source

Value	Name	Description
0x00	DISABLE	Only software/event triggers
0x01	TSENS	TSENS Result Ready Trigger
0x02	SERCOM0 RX	SERCOM0 RX Trigger
0x03	SERCOM0 TX	SERCOM0TX Trigger
0x04	SERCOM1 RX	SERCOM1 RX Trigger
0x05	SERCOM1 TX	SERCOM1 TX Trigger
0x06	SERCOM2 RX	SERCOM2 RX Trigger
0x07	SERCOM2 TX	SERCOM2 TX Trigger
0x08	SERCOM3 RX	SERCOM3 RX Trigger
0x09	SERCOM3 TX	SERCOM3 TX Trigger
0x0A	TCC0 OVF	TCC0 Overflow Trigger
0x0B	TCC0 MC0	TCC0 Match/Compare 0 Trigger
0x0C	TCC0 MC1	TCC0 Match/Compare 1 Trigger
0x0D	TCC0 MC2	TCC0 Match/Compare 2 Trigger
0x0E	TCC0 MC3	TCC0 Match/Compare 3 Trigger
0x0F	TCC1 OVF	TCC1 Overflow Trigger
0x10	TCC1 MC0	TCC1 Match/Compare 0 Trigger
0x11	TCC1 MC1	TCC1 Match/Compare 1 Trigger
0x12	TCC2 OVF	TCC2 Overflow Trigger
0x13	TCC2 MC0	TCC2 Match/Compare 0 Trigger
0x14	TCC2 MC1	TCC2 Match/Compare 1 Trigger
0x15	TC0 OVF	TC0 Overflow Trigger
0x16	TC0 MC0	TC0 Match/Compare 0 Trigger
0x17	TC0 MC1	TC0 Match/Compare 1 Trigger
0x18	TC1 OVF	TC1 Overflow Trigger
0x19	TC1 MC0	TC1 Match/Compare 0 Trigger
0x1A	TC1 MC1	TC1 Match/Compare 1 Trigger
0x1B	TC2 OVF	TC2 Overflow Trigger
0x1C	TC2 MC0	TC2 Match/Compare 0 Trigger
0x1D	TC2 MC1	TC2 Match/Compare 1 Trigger
0x1E	TC3 OVF	TC3 Overflow Trigger
0x1F	TC3 MC0	TC3 Match/Compare 0 Trigger
0x20	TC3 MC1	TC3 Match/Compare 1 Trigger
0x21	TC4 OVF	TC4 Overflow Trigger
0x22	TC4 MC0	TC4 Match/Compare 0 Trigger
0x23	TC4 MC1	TC4 Match/Compare 1 Trigger
0x24	ADC0 RESRDY	ADC0 Result Ready Trigger
0x25	ADC1 RESRDY	ADC1 Result Ready Trigger
0x26	SDADC RESRDY	SDADC Result Ready Trigger
0x27	DAC EMPTY	DAC Empty Trigger
0x28-0x3F	Reserved	Reserved

Bits 6:5 – LVL[1:0] Channel Arbitration Level
These bits define the arbitration level used for the DMA channel, where a high level has priority over a low level. For further details on arbitration schemes, refer to 24.5.2.4 Arbitration.
Note: This bit field is not enable-protected.

TRIGACT[1:0]	Name	Description
0x0	LVL0	Channel Priority Level 0
0x1	LVL1	Channel Priority Level 1
0x2	LVL2	Channel Priority Level 2
0x3	LVL3	Channel Priority Level 3

Bit 4 – EVOE Channel Event Output Enable
This bit indicates if the Channel event generation is enabled. The event will be generated for every condition defined in the descriptor Event Output Selection (BTCTRL.EVOSEL).
This bit is available only for the least significant DMA channels. Refer to table: User Multiplexer Selection and Event Generator Selection of the Event System for details.

Value	Description
0	Channel event generation is disabled.
1	Channel event generation is enabled.

Bit 3 – EVIE Channel Event Input Enable
This bit is available only for the least significant DMA channels. Refer to table: User Multiplexer Selection and Event Generator Selection of the Event System for details.

Value	Description
0	Channel event action will not be executed on any incoming event.
1	Channel event action will be executed on any incoming event.

Bits 2:0 – EVACT[2:0] Event Input Action
These bits define the event input action, as shown below. The action is executed only if the corresponding EVIE bit in CHCTRLB register of the channel is set.
This bit is available only for the least significant DMA channels. Refer to table: User Multiplexer Selection and Event Generator Selection of the Event System for details.

EVACT[2:0]	Name	Description
0x0	NOACT	No action
0x1	TRIG	Normal Transfer and Conditional Transfer on Strobe trigger
0x2	CTRIG	Conditional transfer trigger
0x3	CBLOCK	Conditional block transfer
0x4	SUSPEND	Channel suspend operation
0x5	RESUME	Channel resume operation
0x6	SSKIP	Skip next block suspend action
0x7	-	Reserved

24.6.20 Channel Interrupt Enable Clear

Name: CHINTENCLR
Offset: 0x4C
Reset: 0x00
Property: PAC Write-Protection

This register allows the user to disable an interrupt without doing a read-modify-write operation. Changes in this register will also be reflected in the Channel Interrupt Enable Set (CHINTENSET) register.
This register affects the DMA channel that is selected in the Channel ID register (CHID.ID).

Bit	7	6	5	4	3	2	1	0
						SUSP	TCMPL	TERR
Access						R/W	R/W	R/W
Reset						0	0	0

Bit 2 – SUSP Channel Suspend Interrupt Enable
Writing a '0' to this bit has no effect.
Writing a '1' to this bit will clear the Channel Suspend Interrupt Enable bit, which disables the Channel Suspend interrupt.

Value	Description
0	The Channel Suspend interrupt is disabled.
1	The Channel Suspend interrupt is enabled.

Bit 1 – TCMPL Channel Transfer Complete Interrupt Enable
Writing a '0' to this bit has no effect.
Writing a '1' to this bit will clear the Channel Transfer Complete Interrupt Enable bit, which disables the Channel Transfer Complete interrupt.

Value	Description
0	The Channel Transfer Complete interrupt is disabled. When block action is set to none, the TCMPL flag will not be set when a block transfer is completed.
1	The Channel Transfer Complete interrupt is enabled.

Bit 0 – TERR Channel Transfer Error Interrupt Enable
Writing a '0' to this bit has no effect.
Writing a '1' to this bit will clear the Channel Transfer Error Interrupt Enable bit, which disables the Channel Transfer Error interrupt.

Value	Description
0	The Channel Transfer Error interrupt is disabled.
1	The Channel Transfer Error interrupt is enabled.

24.6.21 Channel Interrupt Enable Set

Name: CHINTENSET
Offset: 0x4D
Reset: 0x00
Property: PAC Write-Protection

This register allows the user to enable an interrupt without doing a read-modify-write operation. Changes in this register will also be reflected in the Channel Interrupt Enable Clear (CHINTENCLR) register.
This register affects the DMA channel that is selected in the Channel ID register (CHID.ID).

Bit	7	6	5	4	3	2	1	0
						SUSP	TCMPL	TERR
Access						R/W	R/W	R/W
Reset						0	0	0

Bit 2 – SUSP Channel Suspend Interrupt Enable
Writing a '0' to this bit has no effect.
Writing a '1' to this bit will set the Channel Suspend Interrupt Enable bit, which enables the Channel Suspend interrupt.

Value	Description
0	The Channel Suspend interrupt is disabled.
1	The Channel Suspend interrupt is enabled.

Bit 1 – TCMPL Channel Transfer Complete Interrupt Enable
Writing a '0' to this bit has no effect.
Writing a '1' to this bit will set the Channel Transfer Complete Interrupt Enable bit, which enables the Channel Transfer Complete interrupt.

Value	Description
0	The Channel Transfer Complete interrupt is disabled.
1	The Channel Transfer Complete interrupt is enabled.

Bit 0 – TERR Channel Transfer Error Interrupt Enable
Writing a '0' to this bit has no effect.
Writing a '1' to this bit will set the Channel Transfer Error Interrupt Enable bit, which enables the Channel Transfer Error interrupt.

Value	Description
0	The Channel Transfer Error interrupt is disabled.
1	The Channel Transfer Error interrupt is enabled.

24.6.22 Channel Interrupt Flag Status and Clear

Name: CHINTFLAG
Offset: 0x4E
Reset: 0x00
Property: -

This register affects the DMA channel that is selected in the Channel ID register (CHID.ID).

Bit	7	6	5	4	3	2	1	0
						SUSP	TCMPL	TERR
Access						R/W	R/W	R/W
Reset						0	0	0

Bit 2 – SUSP Channel Suspend
This flag is cleared by writing a '1' to it.
This flag is set when a block transfer with suspend block action is completed, when a software suspend command is executed, when a suspend event is received or when an invalid descriptor is fetched by the DMA.
Writing a '0' to this bit has no effect.
Writing a '1' to this bit will clear the Channel Suspend interrupt flag for the corresponding channel.
For details on available software commands, refer to CHCTRLB.CMD.
For details on available event input actions, refer to CHCTRLB.EVACT.
For details on available block actions, refer to BTCTRL.BLOCKACT.

Bit 1 – TCMPL Channel Transfer Complete
This flag is cleared by writing a '1' to it.
This flag is set when a block transfer is completed and the corresponding interrupt block action is enabled.
Writing a '0' to this bit has no effect.
Writing a '1' to this bit will clear the Transfer Complete interrupt flag for the corresponding channel.

Bit 0 – TERR Channel Transfer Error
This flag is cleared by writing a '1' to it.
This flag is set when a bus error is detected during a beat transfer or when the DMAC fetches an invalid descriptor.
Writing a '0' to this bit has no effect.
Writing a '1' to this bit will clear the Transfer Error interrupt flag for the corresponding channel.

24.6.23 Channel Status

Name: CHSTATUS
Offset: 0x4F
Reset: 0x00
Property: -

This register affects the DMA channel that is selected in the Channel ID register (CHID.ID).

Bit	7	6	5	4	3	2	1	0
						FERR	BUSY	PEND
Access						R	R	R
Reset						0	0	0

Bit 2 – FERR Channel Fetch Error
This bit is cleared when a software resume command is executed.
This bit is set when an invalid descriptor is fetched.

Bit 1 – BUSY Channel Busy
This bit is cleared when the channel trigger action is completed, when a bus error is detected or when the channel is disabled.
This bit is set when the DMA channel starts a DMA transfer.

Bit 0 – PEND Channel Pending
This bit is cleared when the channel trigger action is started, when a bus error is detected or when the channel is disabled. For details on trigger action settings, refer to CHCTRLB.TRIGACT.
This bit is set when a transfer is pending on the DMA channel, as soon as the transfer request is received.

24.7 Register Summary - SRAM

Offset	Name	Bit Pos.	7	6	5	4	3	2	1	0
0x00	BTCTRL	7:0				BLOCKACT[1:0]		EVOSEL[1:0]		VALID
		15:8	STEPSIZE[2:0]			STEPSEL	DSTINC	SRCINC	BEATSIZE[1:0]	
0x02	BTCNT	7:0	BTCNT[7:0]							
		15:8	BTCNT[15:8]							
0x04	SRCADDR	7:0	SRCADDR[7:0]							
		15:8	SRCADDR[15:8]							
		23:16	SRCADDR[23:16]							
		31:24	SRCADDR[31:24]							
0x08	DSTADDR	7:0	DSTADDR[7:0]							
		15:8	DSTADDR[15:8]							
		23:16	DSTADDR[23:16]							
		31:24	DSTADDR[31:24]							
0x0C	DESCADDR	7:0	DESCADDR[7:0]							
		15:8	DESCADDR[15:8]							
		23:16	DESCADDR[23:16]							
		31:24	DESCADDR[31:24]							

24.7.1 Block Transfer Control

Name: BTCTRL
Offset: 0x00
Property: -

The BTCTRL register offset is relative to (BASEADDR or WRBADDR) + Channel Number * 0x10

Bit	15	14	13	12	11	10	9	8
	STEPSIZE[2:0]			STEPSEL	DSTINC	SRCINC	BEATSIZE[1:0]	
Access								
Reset								

Bit	7	6	5	4	3	2	1	0
				BLOCKACT[1:0]		EVOSEL[1:0]		VALID
Access								
Reset								

Bits 15:13 – STEPSIZE[2:0] Address Increment Step Size
These bits select the address increment step size. The setting apply to source or destination address, depending on STEPSEL setting.

Value	Name	Description
0x0	X1	Next ADDR = ADDR + (Beat size in byte) * 1
0x1	X2	Next ADDR = ADDR + (Beat size in byte) * 2
0x2	X4	Next ADDR = ADDR + (Beat size in byte) * 4
0x3	X8	Next ADDR = ADDR + (Beat size in byte) * 8
0x4	X16	Next ADDR = ADDR + (Beat size in byte) * 16
0x5	X32	Next ADDR = ADDR + (Beat size in byte) * 32
0x6	X64	Next ADDR = ADDR + (Beat size in byte) * 64
0x7	X128	Next ADDR = ADDR + (Beat size in byte) * 128

Bit 12 – STEPSEL Step Selection
This bit selects if source or destination addresses are using the step size settings.

Value	Name	Description
0x0	DST	Step size settings apply to the destination address
0x1	SRC	Step size settings apply to the source address

Bit 11 – DSTINC Destination Address Increment Enable
Writing a '0' to this bit will disable the destination address incrementation. The address will be kept fixed during the data transfer.
Writing a '1' to this bit will enable the destination address incrementation. By default, the destination address is incremented by 1. If the STEPSEL bit is cleared, flexible step-size settings are available in the STEPSIZE register.

Value	Description
0	The Destination Address Increment is disabled.
1	The Destination Address Increment is enabled.

Bit 10 – SRCINC Source Address Increment Enable
Writing a '0' to this bit will disable the source address incrementation. The address will be kept fixed during the data transfer.
Writing a '1' to this bit will enable the source address incrementation. By default, the source address is incremented by 1. If the STEPSEL bit is set, flexible step-size settings are available in the STEPSIZE register.

Value	Description
0	The Source Address Increment is disabled.
1	The Source Address Increment is enabled.

Bits 9:8 – BEATSIZE[1:0] Beat Size
These bits define the size of one beat. A beat is the size of one data transfer bus access, and the setting apply to both read and write accesses.

Value	Name	Description
0x0	BYTE	8-bit bus transfer
0x1	HWORD	16-bit bus transfer
0x2	WORD	32-bit bus transfer
other		Reserved

Bits 4:3 – BLOCKACT[1:0] Block Action
These bits define what actions the DMAC should take after a block transfer has completed.

BLOCKACT[1:0]	Name	Description
0x0	NOACT	Channel will be disabled if it is the last block transfer in the transaction
0x1	INT	Channel will be disabled if it is the last block transfer in the transaction and block interrupt
0x2	SUSPEND	Channel suspend operation is completed
0x3	BOTH	Both channel suspend operation and block interrupt

Bits 2:1 – EVOSEL[1:0] Event Output Selection
These bits define the event output selection.

EVOSEL[1:0]	Name	Description
0x0	DISABLE	Event generation disabled
0x1	BLOCK	Event strobe when block transfer complete
0x2		Reserved
0x3	BEAT	Event strobe when beat transfer complete

Bit 0 – VALID Descriptor Valid
Writing a '0' to this bit in the Descriptor or Write-Back memory will suspend the DMA channel operation when fetching the corresponding descriptor.
The bit is automatically cleared in the Write-Back memory section when channel is aborted, when an error is detected during the block transfer, or when the block transfer is completed.

Value	Description
0	The descriptor is not valid.
1	The descriptor is valid.

24.7.2 Block Transfer Count

Name: BTCNT
Offset: 0x02
Property: -

The BTCNT register offset is relative to (BASEADDR or WRBADDR) + Channel Number * 0x10

Bit	15	14	13	12	11	10	9	8
	BTCNT[15:8]							
Access								
Reset								

Bit	7	6	5	4	3	2	1	0
	BTCNT[7:0]							
Access								
Reset								

Bits 15:0 – BTCNT[15:0] Block Transfer Count
This bit group holds the 16-bit block transfer count.
During a transfer, the internal counter value is decremented by one after each beat transfer. The internal counter is written to the corresponding write-back memory section for the DMA channel when the DMA channel loses priority, is suspended or gets disabled. The DMA channel can be disabled by a complete transfer, a transfer error or by software.

24.7.3 Block Transfer Source Address

Name: SRCADDR
Offset: 0x04
Property: -

The SRCADDR register offset is relative to (BASEADDR or WRBADDR) + Channel Number * 0x10

Bit	31	30	29	28	27	26	25	24
	SRCADDR[31:24]							
Access								
Reset								

Bit	23	22	21	20	19	18	17	16
	SRCADDR[23:16]							
Access								
Reset								

Bit	15	14	13	12	11	10	9	8
	SRCADDR[15:8]							
Access								
Reset								

Bit	7	6	5	4	3	2	1	0
	SRCADDR[7:0]							
Access								
Reset								

Bits 31:0 – SRCADDR[31:0] Transfer Source Address
This bit field holds the block transfer source address.
When source address incrementation is disabled (BTCTRL.SRCINC=0), SRCADDR corresponds to the last beat transfer address in the block transfer.
When source address incrementation is enabled (BTCTRL.SRCINC=1), SRCADDR is calculated as follows:
If BTCTRL.STEPSEL=1:

$$\mathrm{SRCADDR} = \mathrm{SRCADDR}_{START} + BTCNT \cdot \left(BEATSIZE + 1\right) \cdot 2^{\mathrm{STEPSIZE}}$$

If BTCTRL.STEPSEL=0:

$$\mathrm{SRCADDR} = \mathrm{SRCADDR}_{START} + BTCNT \cdot \left(BEATSIZE + 1\right)$$

- $\mathrm{SRCADDR}_{START}$ is the source address of the first beat transfer in the block transfer
- BTCNT is the initial number of beats remaining in the block transfer
- BEATSIZE is the configured number of bytes in a beat
- STEPSIZE is the configured number of beats for each incrementation

24.7.4 Block Transfer Destination Address

Name: DSTADDR
Offset: 0x08
Property: -

The DSTADDR register offset is relative to (BASEADDR or WRBADDR) + Channel Number * 0x10

Bit	31	30	29	28	27	26	25	24
	DSTADDR[31:24]							
Access								
Reset								

Bit	23	22	21	20	19	18	17	16
	DSTADDR[23:16]							
Access								
Reset								

Bit	15	14	13	12	11	10	9	8
	DSTADDR[15:8]							
Access								
Reset								

Bit	7	6	5	4	3	2	1	0
	DSTADDR[7:0]							
Access								
Reset								

Bits 31:0 – DSTADDR[31:0] Transfer Destination Address
This bit field holds the block transfer destination address.
When destination address incrementation is disabled (BTCTRL.DSTINC=0), DSTADDR corresponds to the last beat transfer address in the block transfer.
When destination address incrementation is enabled (BTCTRL.DSTINC=1), DSTADDR is calculated as follows:
If BTCTRL.STEPSEL=1:

$$DSTADDR = DSTADDR_{START} + BTCNT \bullet (BEATSIZE + 1)$$

If BTCTRL.STEPSEL=0:

$$DSTADDR = DSTADDR_{START} + BTCNT \bullet \left(BEATSIZE + 1\right) \bullet 2^{STEPSIZE}$$

- $DSTADDR_{START}$ is the destination address of the first beat transfer in the block transfer
- BTCNT is the initial number of beats remaining in the block transfer
- BEATSIZE is the configured number of bytes in a beat
- STEPSIZE is the configured number of beats for each incrementation

24.7.5 Next Descriptor Address

Name: DESCADDR
Offset: 0x0C
Property: -

The DESCADDR register offset is relative to (BASEADDR or WRBADDR) + Channel Number * 0x10

Bit	31	30	29	28	27	26	25	24
	DESCADDR[31:24]							
Access								
Reset								

Bit	23	22	21	20	19	18	17	16
	DESCADDR[23:16]							
Access								
Reset								

Bit	15	14	13	12	11	10	9	8
	DESCADDR[15:8]							
Access								
Reset								

Bit	7	6	5	4	3	2	1	0
	DESCADDR[7:0]							
Access								
Reset								

Bits 31:0 – DESCADDR[31:0] Next Descriptor Address
This bit group holds the SRAM address of the next descriptor. The value must be 128-bit aligned. If the value of this SRAM register is 0x00000000, the transaction will be terminated when the DMAC tries to load the next transfer descriptor.

25. External Interrupt Controller (EIC)

25.1 Overview

The External Interrupt Controller (EIC) allows external pins to be configured as interrupt lines. Each interrupt line can be individually masked and can generate an interrupt on rising, falling, or both edges, or on high or low levels. Each external pin has a configurable filter to remove spikes. Each external pin can also be configured to be asynchronous in order to wake up the device from sleep modes where all clocks have been disabled. External pins can also generate an event.

A separate non-maskable interrupt (NMI) is also supported. It has properties similar to the other external interrupts, but is connected to the NMI request of the CPU, enabling it to interrupt any other interrupt mode.

25.2 Features

- Up to 16 external pins (EXTINTx), plus one non-maskable pin (NMI)
- Dedicated, individually maskable interrupt for each pin
- Interrupt on rising, falling, or both edges
- Synchronous or asynchronous edge detection mode
- Interrupt pin debouncing
- Interrupt on high or low levels
- Asynchronous interrupts for sleep modes without clock
- Filtering of external pins
- Event generation from EXTINTx

25.3 Block Diagram

Figure 25-1. EIC Block Diagram

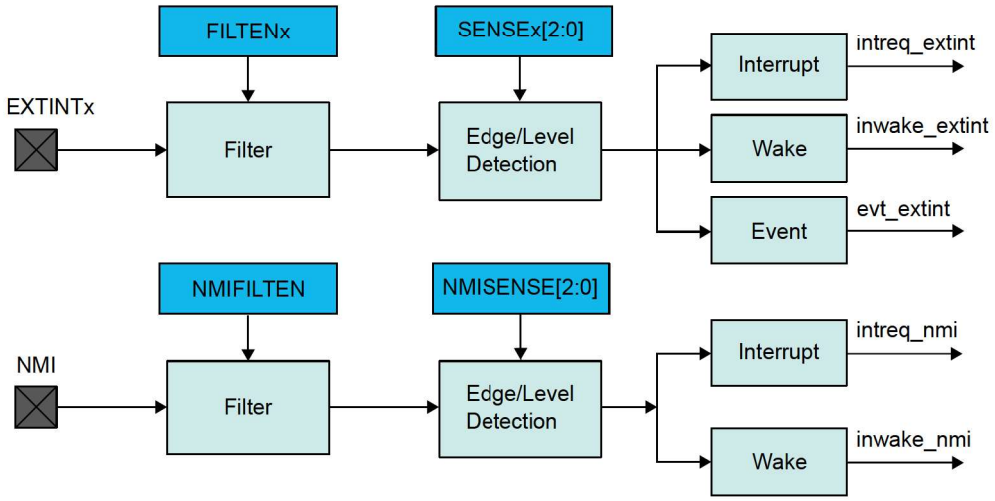

25.4 Signal Description

Signal Name	Type	Description
EXTINT[15..0]	Digital Input	External interrupt pin

.....continued		
Signal Name	**Type**	**Description**
NMI	Digital Input	Non-maskable interrupt pin

One signal may be available on several pins.

25.5 Peripheral Dependencies

Peripheral	Base Address	IRQ	AHB CLK	APB CLK	Generic CLK	PAC		Events		DMA	Sleep Walking
			Enabled at reset	Enabled at reset	Index	Index	Prot at reset	User	Generator	Index	
EIC	0x40002800	3, NMI	-	Y	2	10	N	-	14-29: EXTINT0-15	-	Y

25.6 Functional Description

25.6.1 Principle of Operation

The EIC detects edge or level condition to generate interrupts to the CPU interrupt controller or events to the Event System. Each external interrupt pin (EXTINT) can be filtered using majority vote filtering, clocked by GCLK_EIC or by CLK_ULP32K.

25.6.2 Basic Operation

25.6.2.1 Initialization

The EIC must be initialized in the following order:

1. Enable CLK_EIC_APB
2. If required, configure the NMI by writing the Non-Maskable Interrupt Control register (NMICTRL)
3. Enable GCLK_EIC or CLK_ULP32K when one of the following configuration is selected:
   - The NMI uses edge detection or filtering.
   - One or more EXTINT uses filtering.
   - One or more EXTINT uses edge detection.
   - One or more EXTINT uses debouncing.

   GCLK_EIC is used when a frequency higher than 32.768 kHz is required for filtering.

   CLK_ULP32K is recommended when power consumption is the priority. For CLK_ULP32K write a '1' to the Clock Selection bit in the Control A register (CTRLA.CKSEL).
4. Configure the EIC input sense and filtering by writing the configuration register (CONFIG0 or CONFIG1).
5. Optionally, enable the asynchronous mode.
6. Optionally, enable the debouncer mode.
7. Enable the EIC by writing a '1' to CTRLA.ENABLE.

The following bits are enable-protected, meaning that it can only be written when the EIC is disabled (CTRLA.ENABLE=0):

- Clock Selection bit in Control A register (CTRLA.CKSEL)

The following registers are enable-protected:

- Event Control register (EVCTRL)
- Configuration register (CONFIGn).
- External Interrupt Asynchronous Mode register (25.7.9 ASYNCH)
- Debouncer Enable register (DEBOUNCEN)

- Debounce Prescaler register (DPRESCALER)

Enable-protected bits in the CTRLA register can be written at the same time when setting CTRLA.ENABLE to '1', but not at the same time as CTRLA.ENABLE is being cleared.

Enable-protection is denoted by the "Enable-Protected" property in the register description.

25.6.2.2 Enabling, Disabling, and Resetting

The EIC is enabled by writing a '1' to the Enable bit in the Control A register (CTRLA.ENABLE). The EIC is disabled by writing CTRLA.ENABLE to '0'.

The EIC is reset by setting the Software Reset bit in the Control register (CTRLA.SWRST). All registers in the EIC will be reset to their initial state, and the EIC will be disabled.

Refer to the CTRLA register description for details.

25.6.3 External Pin Processing

Each external pin can be configured to generate an interrupt/event on edge detection (rising, falling or both edges) or level detection (high or low). The sense of external interrupt pins is configured by writing the Input Sense x bits in the configuration register (CONFIGn.SENSEx). The corresponding interrupt flag (INTFLAG.EXTINT[x]) in the Interrupt Flag Status and Clear register (25.7.8 INTFLAG) is set when the interrupt condition is met.

When the interrupt flag has been cleared in edge-sensitive mode, INTFLAG.EXTINT[x] will only be set if a new interrupt condition is met.

In level-sensitive mode, when interrupt has been cleared, INTFLAG.EXTINT[x] will be set immediately if the EXTINTx pin still matches the interrupt condition.

Each external pin can be filtered by a majority vote filtering, clocked by GCLK_EIC or CLK_ULP32K. Filtering is enabled if bit Filter Enable x in the configuration register (CONFIGn.FILTENx) is written to '1'. The majority vote filter samples the external pin three times with GCLK_EIC or CLK_ULP32K and outputs the value when two or more samples are equal.

Table 25-1. Majority Vote Filter Logic

Samples [0, 1, 2]	Filter Output
[0,0,0]	0
[0,0,1]	0
[0,1,0]	0
[0,1,1]	1
[1,0,0]	0
[1,0,1]	1
[1,1,0]	1
[1,1,1]	1

When an external interrupt is configured for level detection and when filtering is disabled, detection is done asynchronously. Level detection and asynchronous edge detection do not require GCLK_EIC or CLK_ULP32K and can generate asynchronous interrupts and events.

If filtering, synchronous edge detection, or debouncing is enabled, the EIC automatically requests GCLK_EIC or CLK_ULP32K to operate. The selection between these two clocks is done by writing the Clock Selection bits in the Control A register (CTRLA.CKSEL). GCLK_EIC must be enabled in the GCLK module. In these modes the external pin is sampled at the EIC clock rate, thus pulses with duration lower than two EIC clock periods may not be properly detected.

Figure 25-2. Interrupt Detection Latency by modes (Rising Edge)

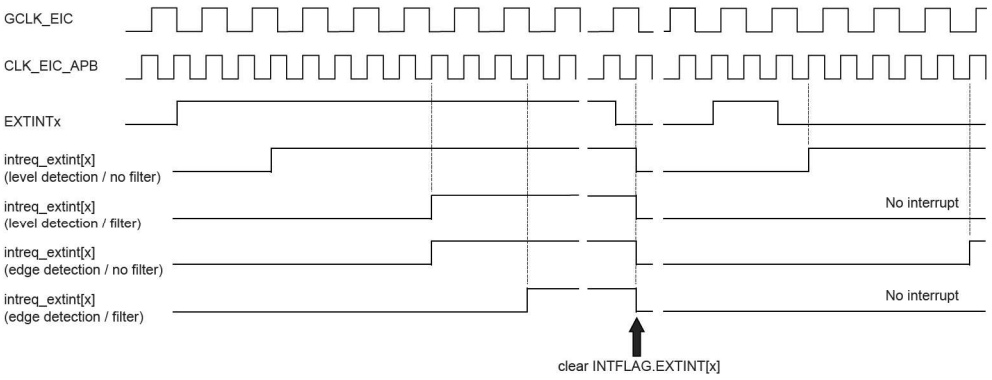

Detection latency depends on the detection mode.

Table 25-2. Detection Latency

Detection mode	Latency (worst case)
Level without filter	Five CLK_EIC_APB periods
Level with filter	Four GCLK_EIC/CLK_ULP32K periods + five CLK_EIC_APB periods
Edge without filter	Four GCLK_EIC/CLK_ULP32K periods + five CLK_EIC_APB periods
Edge with filter	Six GCLK_EIC/CLK_ULP32K periods + five CLK_EIC_APB periods

25.6.4 Additional Features

25.6.4.1 Non-Maskable Interrupt (NMI)

The non-maskable interrupt pin can also generate an interrupt on edge or level detection, but it is configured with the dedicated NMI Control register (NMICTRL). To select the sense for NMI, write to the NMISENSE bit group in the NMI Control register (NMICTRL.NMISENSE). NMI filtering is enabled by writing a '1' to the NMI Filter Enable bit (NMICTRL.NMIFILTEN).

If edge detection or filtering is required, enable GCLK_EIC or CLK_ULP32K.

NMI detection is enabled only by the NMICTRL.NMISENSE value, and the EIC module is not required to be enabled.

When an NMI is detected, the non-maskable interrupt flag in the NMI Flag Status and Clear register is set (NMIFLAG.NMI). NMI interrupt generation is always enabled, and NMIFLAG.NMI generates an interrupt request when set.

25.6.4.2 Asynchronous Edge Detection Mode

The EXTINT edge detection operates synchronously or asynchronously, as selected by the Asynchronous Control Mode bit for external pin ‘x’ in the External Interrupt Asynchronous Mode register (ASYNCH.ASYNCH[x]). The EIC edge detection is operated synchronously when the Asynchronous Control Mode bit (ASYNCH.ASYNCH[x]) is '0' (default value). It is operated asynchronously when ASYNCH.ASYNCH[x] is written to '1'.

In Synchronous Edge Detection Mode, the external interrupt (EXTINT) or the non-maskable interrupt (NMI) pins are sampled using the EIC clock as defined by the Clock Selection bit in the Control A register (CTRLA.CKSEL). The External Interrupt flag (INTFLAG.EXTINT[x]) or Non-Maskable Interrupt flag (NMIFLAG.NMI) is set when the last sampled state of the pin differs from the previously sampled state. The EIC clock is needed in this mode.

The Synchronous Edge Detection Mode can be used in Idle and Standby sleep modes.

In Asynchronous Edge Detection Mode, the external interrupt (EXTINT) pins or the non-maskable interrupt (NMI) pins set the External Interrupt flag or Non-Maskable Interrupt flag (INTFLAG.EXTINT[x] or NMIFLAG) directly. The EIC clock is not needed in this mode.

The asynchronous edge detection mode can be used in Idle and Standby sleep modes. When asynchronous edge detection is enabled in Standby sleep mode, only the first edge detected will trigger an event in the Event System.

Subsequent asynchronous edges will not generate events until Standby sleep mode is exited. Synchronous edge detection will not exhibit this behavior.

25.6.5 Interrupts

The EIC has the following interrupt sources:

- External interrupt pins (EXTINTx). See 25.6.2 Basic Operation.
- Non-maskable interrupt pin (NMI). See 25.6.4 Additional Features.

Each interrupt source has an associated interrupt flag. The interrupt flag in the Interrupt Flag Status and Clear register (INTFLAG) is set when an interrupt condition occurs (NMIFLAG for NMI). Each interrupt, except NMI, can be individually enabled by setting the corresponding bit in the Interrupt Enable Set register (INTENSET=1), and disabled by setting the corresponding bit in the Interrupt Enable Clear register (INTENCLR=1). As both INTENSET and INTENCLR always reflect the same value, the status of interrupt enablement can be read from either register.

An interrupt request is generated when the interrupt flag is set and the corresponding interrupt is enabled. The interrupt request remains active until the interrupt flag is cleared, the interrupt is disabled, or the EIC is reset. See the INTFLAG register for details on how to clear interrupt flags. The EIC has one interrupt request line for each external interrupt (EXTINTx) and one line for NMI. The user must read the INTFLAG (or NMIFLAG) register to determine which interrupt condition is present.

Notes:

1. Interrupts must be globally enabled for interrupt requests to be generated.
2. If an external interrupt (EXTINT) is common on two or more I/O pins, only one will be active (the first one programmed).

25.6.6 Events

The EIC can generate the following output events:

- External event from pin (EXTINTx).

Setting an Event Output Control register (EVCTRL.EXTINTEO) enables the corresponding output event. Clearing this bit disables the corresponding output event. Refer to Event System for details on configuring the Event System.

When the condition on pin EXTINTx matches the configuration in the CONFIGn.SENSEx bit field, the corresponding event is generated, if enabled.

25.6.7 Sleep Mode Operation

In sleep modes, an EXTINTx pin can wake up the device if the corresponding condition matches the configuration in the CONFIGn register, and the corresponding bit in the Interrupt Enable Set register (25.7.7 INTENSET) is written to '1'.

Figure 25-3. Wake-up Operation Example (High-Level Detection, No Filter, Interrupt Enable Set)

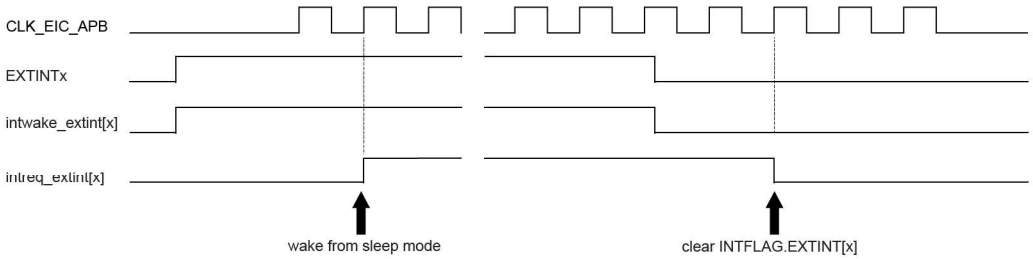

25.6.8 Synchronization

Due to asynchronicity between the main clock domain and the peripheral clock domains, some registers need to be synchronized when written or read.

The following bits are synchronized when written:

- Software Reset bit in control register (CTRLA.SWRST)
- Enable bit in control register (CTRLA.ENABLE)

Required write-synchronization is denoted by the "Write-Synchronized" property in the register description.

25.7 Register Summary

Offset	Name	Bit Pos.	7	6	5	4	3	2	1	0
0x00	CTRLA	7:0				CKSEL			ENABLE	SWRST
0x01	NMICTRL	7:0				NMIASYNCH	NMIFILTEN	NMISENSE[2:0]		
0x02	NMIFLAG	7:0								NMI
		15:8								
0x04	SYNCBUSY	7:0							ENABLE	SWRST
		15:8								
		23:16								
		31:24								
0x08	EVCTRL	7:0	EXTINTEO7	EXTINTEO6	EXTINTEO5	EXTINTEO4	EXTINTEO3	EXTINTEO2	EXTINTEO1	EXTINTEO0
		15:8	EXTINTEO15	EXTINTEO14	EXTINTEO13	EXTINTEO12	EXTINTEO11	EXTINTEO10	EXTINTEO9	EXTINTEO8
		23:16								
		31:24								
0x0C	INTENCLR	7:0	EXTINT7	EXTINT6	EXTINT5	EXTINT4	EXTINT3	EXTINT2	EXTINT1	EXTINT0
		15:8	EXTINT15	EXTINT14	EXTINT13	EXTINT12	EXTINT11	EXTINT10	EXTINT9	EXTINT8
		23:16								
		31:24								
0x10	INTENSET	7:0	EXTINT7	EXTINT6	EXTINT5	EXTINT4	EXTINT3	EXTINT2	EXTINT1	EXTINT0
		15:8	EXTINT15	EXTINT14	EXTINT13	EXTINT12	EXTINT11	EXTINT10	EXTINT9	EXTINT8
		23:16								
		31:24								
0x14	INTFLAG	7:0	EXTINT7	EXTINT6	EXTINT5	EXTINT4	EXTINT3	EXTINT2	EXTINT1	EXTINT0
		15:8	EXTINT15	EXTINT14	EXTINT13	EXTINT12	EXTINT11	EXTINT10	EXTINT9	EXTINT8
		23:16								
		31:24								
0x18	ASYNCH	7:0	ASYNCH7	ASYNCH6	ASYNCH5	ASYNCH4	ASYNCH3	ASYNCH2	ASYNCH1	ASYNCH0
		15:8	ASYNCH15	ASYNCH14	ASYNCH13	ASYNCH12	ASYNCH11	ASYNCH10	ASYNCH9	ASYNCH8
		23:16								
		31:24								
0x1C	CONFIG0	7:0	FILTEN1	SENSE1[2:0]			FILTEN0	SENSE0[2:0]		
		15:8	FILTEN3	SENSE3[2:0]			FILTEN2	SENSE2[2:0]		
		23:16	FILTEN5	SENSE5[2:0]			FILTEN4	SENSE4[2:0]		
		31:24	FILTEN7	SENSE7[2:0]			FILTEN6	SENSE6[2:0]		
0x20	CONFIG1	7:0	FILTEN1	SENSE1[2:0]			FILTEN0	SENSE0[2:0]		
		15:8	FILTEN3	SENSE3[2:0]			FILTEN2	SENSE2[2:0]		
		23:16	FILTEN5	SENSE5[2:0]			FILTEN4	SENSE4[2:0]		
		31:24	FILTEN7	SENSE7[2:0]			FILTEN6	SENSE6[2:0]		

25.7.1 Control A

Name: CTRLA
Offset: 0x00
Reset: 0x00
Property: PAC Write-Protection, Write-Synchronized Bits

Bit	7	6	5	4	3	2	1	0
				CKSEL			ENABLE	SWRST
Access				RW			RW	W
Reset				0			0	0

Bit 4 – CKSEL Clock Selection
The EIC can be clocked either by GCLK_EIC (when a frequency higher than 32.768 kHz is required for filtering) or by CLK_ULP32K (when power consumption is the priority).
Note: This bit is not synchronized.

Value	Description
0	The EIC is clocked by GCLK_EIC.
1	The EIC is clocked by CLK_ULP32K.

Bit 1 – ENABLE Enable
Note: This bit is write-synchronized: SYNCBUSY.ENABLE must be checked to ensure the CTRLA.ENABLE synchronization is complete.

Value	Description
0	The EIC is disabled.
1	The EIC is enabled.

Bit 0 – SWRST Software Reset
Writing a '0' to this bit has no effect.
Writing a '1' to this bit resets all registers in the EIC to their initial state, and the EIC will be disabled.
Writing a '1' to CTRLA.SWRST will always take precedence, meaning that all other writes in the same write operation will be discarded.
Note: This bit is write-synchronized: SYNCBUSY.SWRST must be checked to ensure the CTRLA.SWRST synchronization is complete.

Value	Description
0	There is no ongoing reset operation.
1	The reset operation is ongoing.

25.7.2 Non-Maskable Interrupt Control

Name: NMICTRL
Offset: 0x01
Reset: 0x00
Property: PAC Write-Protection

Bit	7	6	5	4	3	2	1	0
				NMIASYNCH	NMIFILTEN	NMISENSE[2:0]		
Access				R/W	R/W	R/W	R/W	R/W
Reset				0	0	0	0	0

Bit 4 – NMIASYNCH NMI Asynchronous Edge Detection Mode
The NMI edge detection can be operated synchronously or asynchronously to the EIC clock.

Value	Description
0	The NMI edge detection is synchronously operated.
1	The NMI edge detection is asynchronously operated.

Bit 3 – NMIFILTEN Non-Maskable Interrupt Filter Enable

Value	Description
0	NMI filter is disabled.
1	NMI filter is enabled.

Bits 2:0 – NMISENSE[2:0] Non-Maskable Interrupt Sense Configuration
These bits define on which edge or level the NMI triggers.

Value	Name	Description
0x0	NONE	No detection
0x1	RISE	Rising-edge detection
0x2	FALL	Falling-edge detection
0x3	BOTH	Both-edge detection
0x4	HIGH	High-level detection
0x5	LOW	Low-level detection
0x6 – 0x7	-	Reserved

25.7.3 Non-Maskable Interrupt Flag Status and Clear

Name: NMIFLAG
Offset: 0x02
Reset: 0x0000
Property: -

Bit	15	14	13	12	11	10	9	8
Access								
Reset								

Bit	7	6	5	4	3	2	1	0
								NMI
Access								RW
Reset								0

Bit 0 – NMI Non-Maskable Interrupt
This flag is cleared by writing a '1' to it.
This flag is set when the NMI pin matches the NMI sense configuration, and will generate an interrupt request.
Writing a '0' to this bit has no effect.

25.7.4 Synchronization Busy

Name: SYNCBUSY
Offset: 0x04
Reset: 0x00000000
Property: -

Bit	31	30	29	28	27	26	25	24
Access								
Reset								

Bit	23	22	21	20	19	18	17	16
Access								
Reset								

Bit	15	14	13	12	11	10	9	8
Access								
Reset								

Bit	7	6	5	4	3	2	1	0
							ENABLE	SWRST
Access							R	R
Reset							0	0

Bit 1 – ENABLE Enable Synchronization Busy Status

Value	Description
0	Write synchronization for CTRLA.ENABLE bit is complete.
1	Write synchronization for CTRLA.ENABLE bit is ongoing.

Bit 0 – SWRST Software Reset Synchronization Busy Status

Value	Description
0	Write synchronization for CTRLA.SWRST bit is complete.
1	Write synchronization for CTRLA.SWRST bit is ongoing.

25.7.5 Event Control

Name: EVCTRL
Offset: 0x08
Reset: 0x00000000
Property: PAC Write-Protection, Enable-Protected

Bit	31	30	29	28	27	26	25	24
Access								
Reset								

Bit	23	22	21	20	19	18	17	16
Access								
Reset								

Bit	15	14	13	12	11	10	9	8
	EXTINTEO15	EXTINTEO14	EXTINTEO13	EXTINTEO12	EXTINTEO11	EXTINTEO10	EXTINTEO9	EXTINTEO8
Access	R/W	R/W	R/W	R/W	R/W	R/W	R/W	R/W
Reset	0	0	0	0	0	0	0	0

Bit	7	6	5	4	3	2	1	0
	EXTINTEO7	EXTINTEO6	EXTINTEO5	EXTINTEO4	EXTINTEO3	EXTINTEO2	EXTINTEO1	EXTINTEO0
Access	R/W	R/W	R/W	R/W	R/W	R/W	R/W	R/W
Reset	0	0	0	0	0	0	0	0

Bits 0, 1, 2, 3, 4, 5, 6, 7, 8, 9, 10, 11, 12, 13, 14, 15 – EXTINTEOx External Interrupt Event Output Enable [x = 15..0]
The bit x of EXTINTEO enables the event associated with the EXTINTx pin.

Value	Description
0	Event from pin EXTINTx is disabled.
1	Event from pin EXTINTx is enabled and will be generated when EXTINTx pin matches the external interrupt sensing configuration.

25.7.6 Interrupt Enable Clear

Name: INTENCLR
Offset: 0x0C
Reset: 0x00000000
Property: PAC Write-Protection

This register allows the user to disable an interrupt without doing a read-modify-write operation. Changes in this register will also be reflected in the Interrupt Enable Set register (INTENSET).

Bit	31	30	29	28	27	26	25	24
Access								
Reset								

Bit	23	22	21	20	19	18	17	16
Access								
Reset								

Bit	15	14	13	12	11	10	9	8
	EXTINT15	EXTINT14	EXTINT13	EXTINT12	EXTINT11	EXTINT10	EXTINT9	EXTINT8
Access	R/W	R/W	R/W	R/W	R/W	R/W	R/W	R/W
Reset	0	0	0	0	0	0	0	0

Bit	7	6	5	4	3	2	1	0
	EXTINT7	EXTINT6	EXTINT5	EXTINT4	EXTINT3	EXTINT2	EXTINT1	EXTINT0
Access	R/W	R/W	R/W	R/W	R/W	R/W	R/W	R/W
Reset	0	0	0	0	0	0	0	0

Bits 0, 1, 2, 3, 4, 5, 6, 7, 8, 9, 10, 11, 12, 13, 14, 15 – EXTINTx External Interrupt Enable [x = 15..0]
The bit x of EXTINT disables the interrupt associated with the EXTINTx pin.
Writing a '0' to bit x has no effect.
Writing a '1' to bit x will clear the External Interrupt Enable bit x, which disables the external interrupt EXTINTx.

Value	Description
0	The external interrupt x is disabled.
1	The external interrupt x is enabled.

25.7.7 Interrupt Enable Set

Name: INTENSET
Offset: 0x10
Reset: 0x00000000
Property: PAC Write-Protection

This register allows the user to enable an interrupt without doing a read-modify-write operation. Changes in this register will also be reflected in the Interrupt Enable Clear (INTENCLR) register.

Bit	31	30	29	28	27	26	25	24
Access								
Reset								

Bit	23	22	21	20	19	18	17	16
Access								
Reset								

Bit	15	14	13	12	11	10	9	8
	EXTINT15	EXTINT14	EXTINT13	EXTINT12	EXTINT11	EXTINT10	EXTINT9	EXTINT8
Access	R/W	R/W	R/W	R/W	R/W	R/W	R/W	R/W
Reset	0	0	0	0	0	0	0	0

Bit	7	6	5	4	3	2	1	0
	EXTINT7	EXTINT6	EXTINT5	EXTINT4	EXTINT3	EXTINT2	EXTINT1	EXTINT0
Access	R/W	R/W	R/W	R/W	R/W	R/W	R/W	R/W
Reset	0	0	0	0	0	0	0	0

Bits 0, 1, 2, 3, 4, 5, 6, 7, 8, 9, 10, 11, 12, 13, 14, 15 – EXTINTx External Interrupt Enable [x = 15..0]
The bit x of EXTINT enables the interrupt associated with the EXTINTx pin.
Writing a '0' to bit x has no effect.
Writing a '1' to bit x will set the External Interrupt Enable bit x, which enables the external interrupt EXTINTx.

Value	Description
0	The external interrupt x is disabled.
1	The external interrupt x is enabled.

25.7.8 Interrupt Flag Status and Clear

Name: INTFLAG
Offset: 0x14
Reset: 0x00000000
Property: -

Bit	31	30	29	28	27	26	25	24
Access								
Reset								

Bit	23	22	21	20	19	18	17	16
Access								
Reset								

Bit	15	14	13	12	11	10	9	8
	EXTINT15	EXTINT14	EXTINT13	EXTINT12	EXTINT11	EXTINT10	EXTINT9	EXTINT8
Access	R/W	R/W	R/W	R/W	R/W	R/W	R/W	R/W
Reset	0	0	0	0	0	0	0	0

Bit	7	6	5	4	3	2	1	0
	EXTINT7	EXTINT6	EXTINT5	EXTINT4	EXTINT3	EXTINT2	EXTINT1	EXTINT0
Access	R/W	R/W	R/W	R/W	R/W	R/W	R/W	R/W
Reset	0	0	0	0	0	0	0	0

Bits 0, 1, 2, 3, 4, 5, 6, 7, 8, 9, 10, 11, 12, 13, 14, 15 – EXTINTx External Interrupt [x = 15..0]
The flag bit x is cleared by writing a '1' to it.
This flag is set when EXTINTx pin matches the external interrupt sense configuration and will generate an interrupt request if INTENCLR/SET.EXTINT[x] is '1'.
Writing a '0' to this bit has no effect.
Writing a '1' to this bit clears the External Interrupt x flag.

25.7.9 External Interrupt Asynchronous Mode

Name: ASYNCH
Offset: 0x18
Reset: 0x00000000
Property: PAC Write-Protection, Enable-Protected

Bit	31	30	29	28	27	26	25	24
Access								
Reset								

Bit	23	22	21	20	19	18	17	16
Access								
Reset								

Bit	15	14	13	12	11	10	9	8
	ASYNCH15	ASYNCH14	ASYNCH13	ASYNCH12	ASYNCH11	ASYNCH10	ASYNCH9	ASYNCH8
Access	RW	RW	RW	RW	RW	RW	RW	RW
Reset	0	0	0	0	0	0	0	0

Bit	7	6	5	4	3	2	1	0
	ASYNCH7	ASYNCH6	ASYNCH5	ASYNCH4	ASYNCH3	ASYNCH2	ASYNCH1	ASYNCH0
Access	RW	RW	RW	RW	RW	RW	RW	RW
Reset	0	0	0	0	0	0	0	0

Bits 0, 1, 2, 3, 4, 5, 6, 7, 8, 9, 10, 11, 12, 13, 14, 15 – ASYNCH Asynchronous Edge Detection Mode [x = 15..0]
The bit x of ASYNCH set the Asynchronous Edge Detection Mode for the interrupt associated with the EXTINTx pin.

Value	Description
0	The EXTINT x edge detection is synchronously operated.
1	The EXTINT x edge detection is asynchronously operated.

25.7.10 External Interrupt Sense Configuration n

Name: CONFIGn
Offset: 0x1C + n*0x04 [n=0..1]
Reset: 0x00000000
Property: PAC Write-Protection, Enable-Protected

Bit	31	30	29	28	27	26	25	24
	FILTEN7	SENSE7[2:0]			FILTEN6	SENSE6[2:0]		
Access	RW	RW	RW	RW	RW	RW	RW	RW
Reset	0	0	0	0	0	0	0	0

Bit	23	22	21	20	19	18	17	16
	FILTEN5	SENSE5[2:0]			FILTEN4	SENSE4[2:0]		
Access	RW	RW	RW	RW	RW	RW	RW	RW
Reset	0	0	0	0	0	0	0	0

Bit	15	14	13	12	11	10	9	8
	FILTEN3	SENSE3[2:0]			FILTEN2	SENSE2[2:0]		
Access	RW	RW	RW	RW	RW	RW	RW	RW
Reset	0	0	0	0	0	0	0	0

Bit	7	6	5	4	3	2	1	0
	FILTEN1	SENSE1[2:0]			FILTEN0	SENSE0[2:0]		
Access	RW	RW	RW	RW	RW	RW	RW	RW
Reset	0	0	0	0	0	0	0	0

Bits 3, 7, 11, 15, 19, 23, 27, 31 – FILTENx Filter Enable x [x = 7..0]
Note: The filter must be disabled if the asynchronous detection is enabled.

Value	Description
0	Filter is disabled for EXTINT[n*8+x] input.
1	Filter is enabled for EXTINT[n*8+x] input.

Bits 0:2, 4:6, 8:10, 12:14, 16:18, 20:22, 24:26, 28:30 – SENSEx Input Sense Configuration x [x = 7..0]
These bits define on which edge or level the interrupt or event for EXTINT[n*8+x] will be generated.

Value	Name	Description
0x0	NONE	No detection
0x1	RISE	Rising-edge detection
0x2	FALL	Falling-edge detection
0x3	BOTH	Both-edge detection
0x4	HIGH	High-level detection
0x5	LOW	Low-level detection
0x6 – 0x7	-	Reserved

26. Nonvolatile Memory Controller (NVMCTRL)

26.1 Overview

Nonvolatile Memory (NVM) is a reprogrammable Flash memory that retains program and data storage even with power off. It embeds a main array and a separate smaller Data Flash array, which can be programmed while reading the main array. A size-configurable section at the beginning of the main array can be configured as write protected, thus providing an immutable boot section. The NVM Controller (NVMCTRL) connects to the AHB and APB bus interfaces for system access to the NVM block. The AHB interface is used for reads and writes to the NVM block, while the APB interface is used for commands and configuration.

26.2 Features

- 32-bit AHB interface for reads and writes
- Data Flash
- All NVM sections are memory mapped to the AHB, including calibration and system configuration
- 32-bit APB interface for commands and control
- Programmable wait states
- 16 regions can be individually protected or unprotected against erase and writes
- Additional protection for bootloader against erase and writes
- Supports device protection through a security bit
- Supports permanent disabling of the Chip-Erase feature
- Interface to Power Manager for power-down of Flash blocks in sleep modes
- Can optionally wake up on exit from sleep or on first access
- Direct-mapped cache for the main array and the Data Flash section

26.3 Block Diagram

Figure 26-1. Block Diagram

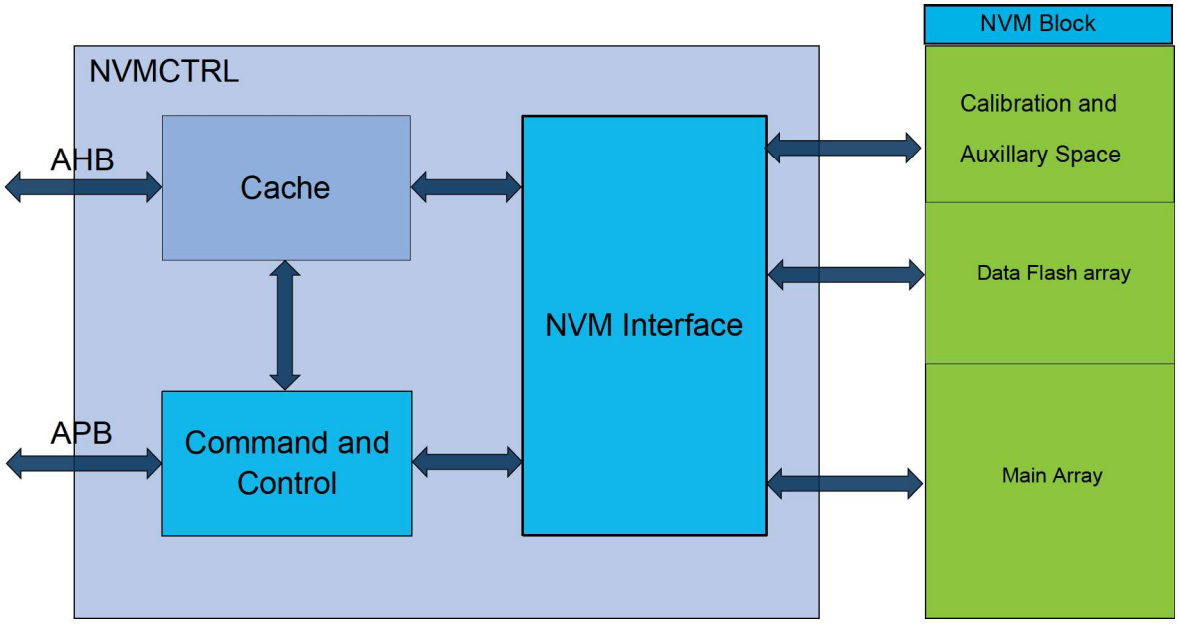

26.4 Peripheral Dependencies

Peripheral	Base Address	IRQ	AHB CLK	APB CLK	Generic CLK	PAC		Events		DMA	Sleep Walking
			Enabled at reset	Enabled at reset	Index	Index	Prot at reset	User	Generator	Index	
NVMCTRL	0x41004000	6	Y	Y	-	2	N	-	-	-	Y

26.5 Functional Description

26.5.1 Principle of Operation

The NVM Controller is a slave on the AHB and APB buses. It responds to commands, read requests and write requests, based on user configuration.

26.5.1.1 Initialization

After power up, the NVM Controller goes through a power-up sequence. During this time, access to the NVM Controller from the AHB bus is halted. Upon power-up completion, the NVM Controller is operational without any need for user configuration.

26.5.2 Memory Organization

Refer to the Physical Memory Map for memory sizes and addresses for each device.

The NVM is organized into rows, where each row contains four pages, as shown in the NVM Row Organization figure. One page is made of 64 bytes, that is sixteen 32bits words, or height 64bits double words. One row is made of 4 pages, that is 256 bytes, or sixty four 32bits words, or sixteen 64bits double words. The NVM has a row-erase granularity, while the write granularity is by page. In other words, a single row erase will erase all four pages in the row, while four write operations are used to write the complete row.

Figure 26-2. NVM Row Organization

Row n	Page (n*4) + 3	Page (n*4) + 2	Page (n*4) + 1	Page (n*4) + 0

The NVM block contains a calibration and auxiliary space, a Data Flash section, and a main array that is memory mapped. Refer to the NVM Organization figure below for details.

The calibration and auxiliary space contains factory calibration and system configuration information. These spaces can be read from the AHB bus in the same way as the main NVM main address space.

In addition, the lower rows in the NVM main address space can be allocated as a boot loader section. Its size is configured thanks to the BOOTPROT fuses (refer to Table 26-2) in the user row. Once BOOTPROT is defined and after the next reboot, the content of the section becomes write-protected from the debugger or the processor write accesses.

Figure 26-3. NVM Memory Address Space

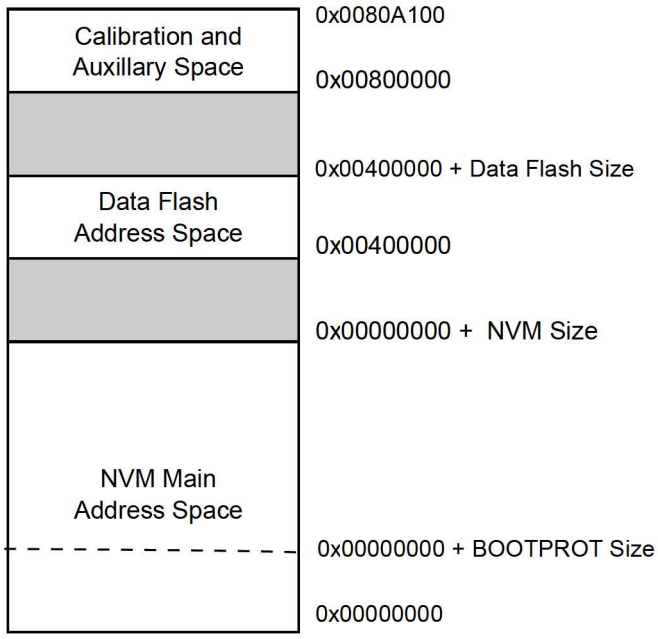

26.5.3 Region Lock Bits

The NVM main array is split into 16 equally sized regions. The region size is dependent on the Flash memory size, and is given in the table below. Each region has a dedicated lock bit preventing writing and erasing pages in the region. After production, all regions will be unlocked.

Table 26-1. Region Size

Memory Size [KB]	Region Size [KB]
128	8
64	4

To temporarily lock or unlock a region, the Lock Region and Unlock Region commands are provided. Writing one of these commands will temporarily lock/unlock the region containing the address loaded in the ADDR register. ADDR can be written by software, or the automatically loaded value from a write operation can be used. The new setting will stay in effect until the next Reset, or until the setting is changed again using the Lock and Unlock commands. The current status of the lock can be determined by reading the LOCK register.

To change the default lock/unlock setting for a region, the user configuration section of the auxiliary space must be written using the Write Auxiliary Page command. Writing to the auxiliary space will take effect after the next Reset. Therefore, a boot of the device is needed for changes in the lock/unlock setting to take effect. Refer to the Physical Memory Map for calibration and auxiliary space address mapping.

Notes:

1. The Data Flash is outside of the regions lock bits range, and consequently cannot be write protected.
2. The boot loader section is write protected by the BOOTPROT fuse and by the lock bit(s) corresponding to its address space.

26.5.4 Command and Data Interface

The NVM Controller is addressable from the APB bus, while the NVM main address space is addressable from the AHB bus. Read and automatic page write operations are performed by addressing the NVM main address space or

the Data Flash address space directly, while other operations such as manual page writes and row erases must be performed by issuing commands through the NVM Controller.

To issue a command, the CTRLA.CMD bits must be written along with the CTRLA.CMDEX value. When a command is issued, INTFLAG.READY will be cleared until the command has completed. Any commands written while INTFLAG.READY is low will be ignored. Before entering any sleep mode, ensure any commands written to the NVM controller have completed by confirming the INTFLAG.READY is '1'.

The CTRLB register must be used to control the power reduction mode, read wait states, and write mode.

26.5.4.1 NVM Read

Reading from the NVM main address space is performed via the AHB bus by addressing the NVM main address space or auxiliary address space directly. Read data is available after the configured number of read wait states (CTRLB.RWS) set in the NVM Controller.

The number of cycles data are delayed to the AHB bus is determined by the read wait states. Examples of using zero and one wait states are shown in the following figure.

Reading the NVM main address space while a programming or erase operation is ongoing on the NVM main array results in an AHB bus stall until the end of the operation. Reading the NVM main array does not stall the bus when the Data Flash array is being programmed or erased.

Figure 26-4. Read Wait State Examples

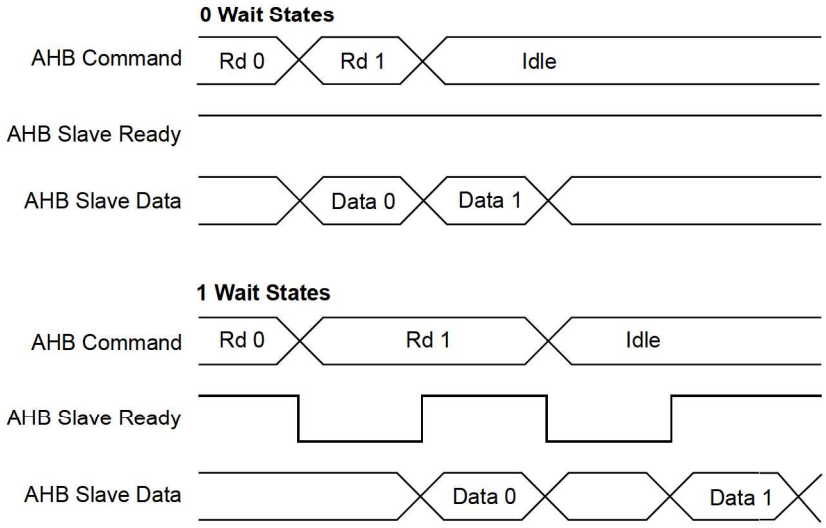

26.5.4.2 Data Flash Read

Reading from the Data Flash address space is performed via the AHB bus by addressing the Data Flash address space directly.

Read timings are similar to regular NVM read timings when access size is Byte or half-Word. The AHB data phase is twice as long in case of full-Word-size access.

It is not possible to read the Data Flash area while the NVM main array is being written or erased, whereas the Data Flash area can be written or erased while the main array is being read.

26.5.4.3 NVM Write

The NVM Controller requires that an erase must be done before programming. The entire NVM main address space and the Data Flash address space can be erased by a debugger Chip Erase command. Alternatively, rows can be individually erased by the Erase Row command or the Data Flash Erase Row command to erase the NVM main address space or the Data Flash address space, respectively.

After programming the NVM main array, the region that the page resides in can be locked to prevent spurious write or erase sequences. Locking is performed on a per-region basis, and so, locking a region will lock all pages inside the region. Refer to Region Lock Bits for more information.

Data to be written to the NVM block are first written to and stored in an internal buffer called the *page buffer*. The page buffer contains the same number of bytes as an NVM page. Writes to the page buffer must be 32 bits. 16-bit and 8-bit writes to the page buffer are not allowed and will cause a system exception.

Internally, writes to the page buffer are on a 64-bit basis through the page buffer load data register (PBLDATA1 and PBLDATA0). The PBLDATA register is a holding register for writes to the same 64-bit page buffer section. Data within a 64-bit section can be written in any order. Crossing a 64-bit boundary will reset the PBLDATA register to all ones. The following example assumes startup from reset where the current address is 0 and PBLDATA is all ones. Only 64 bits of the page buffer are written at a time, but 128 bits are shown for reference.

Sequential 32-bit Write Example:

- 32-bit 0x1 written to address 0
  - Page buffer[127:0] = {0xFFFFFFFF_FFFFFFFF, PBLDATA[63:32], 0x00000001}
  - PBLDATA[63:0] = {PBLDATA[63:32], 0x00000001}
- 32-bit 0x2 written to address 1
  - Page buffer[127:0] = {0xFFFFFFFF_FFFFFFFF, 0x00000002, PBLDATA[31:0]}
  - PBLDATA[63:0] = {0x00000002, PBLDATA[31:0]}
- 32-bit 0x3 written to address 2 (crosses 64-bit boundary)
  - Page buffer[127:0] = 0xFFFFFFFF_00000003_00000002_00000001
  - PBLDATA[63:0] = 0xFFFFFFFF_00000003

Random access writes to 32-bit words within the page buffer will overwrite the opposite word within the same 64-bit section with ones. In the following example, notice that 0x00000001 is overwritten with 0xFFFFFFFF from the third write due to the 64-bit boundary crossing. Only 64 bits of the page buffer are written at a time, but 128 bits are shown for reference.

Random Access 32-bit Write Example:

- 32-bit 0x1 written to address 2
  - Page buffer[127:0] = 0xFFFFFFFF_00000001_FFFFFFFF_FFFFFFFF
  - PBLDATA[63:0] = 0xFFFFFFFF_00000001
- 32-bit 0x2 written to address 1
  - Page buffer[127:0] = 0xFFFFFFFF_00000001_00000002_FFFFFFFF
  - PBLDATA[63:0] = 0x00000002_FFFFFFFF
- 32-bit 0x3 written to address 3
  - Page buffer[127:0] = 0x00000003_FFFFFFFF_00000002_FFFFFFFF
  - PBLDATA[63:0] = 0x00000003_0xFFFFFFFF

Both the NVM main array and the Data Flash array share the same page buffer. Writing to the NVM block via the AHB bus is performed by a load operation to the page buffer. For each AHB bus write, the address is stored in the ADDR register. After the page buffer has been loaded with the required number of bytes, the page can be written to the NVM main array or the Data Flash by setting CTRLA.CMD to 'Write Page' or 'Data Flash Write Page', respectively, and setting the key value to CMDEX. The LOAD bit in the STATUS register indicates whether the page buffer has been loaded or not. Before writing the page to memory, the accessed row must be erased.

Automatic page writes are enabled by writing the manual write bit to zero (CTRLB.MANW=0). This will trigger a write operation to the page addressed by ADDR when the last location of the page is written.

Because the address is automatically stored in ADDR during the I/O bus write operation, the last given address will be present in the ADDR register. There is no need to load the ADDR register manually, unless a different page in memory is to be written.

26.5.4.3.1 Procedure for Manual Page Writes (CTRLB.MANW=1)

The row containing the page to be written must be erased before the write command is given.

- Write to the page buffer by addressing the NVM main address space directly
- Write the page buffer to memory: CTRL.CMD='Write Page' and CMDEX
- The READY bit in the INTFLAG register will be low while programming is in progress, and access through the AHB will be stalled

26.5.4.3.2 Procedure for Automatic Page Writes (CTRLB.MANW=0)

The row containing the page to be written must be erased before the last write to the page buffer is performed.

- Write to the page buffer by addressing the NVM main address space directly.
  When the last location in the page buffer is written, the page is automatically written to NVM main address space. (Partial page writes are possible and require writing 0xFF in the remaining bytes of the page buffer)
- INTFLAG.READY will be zero while programming is in progress and access through the AHB will be stalled.

26.5.4.4 Page Buffer Clear

The page buffer is automatically set to all '1' after a page write is performed. If the page buffer has been partially written and if it is desired to clear its content, the Page Buffer Clear command can be used.

26.5.4.5 Erase Row

Before a page can be written, the row containing that page must be erased. The Erase Row command can be used to erase the desired row in the NVM main address space. The Data Flash Erase Row command can be used to erase the desired row in the Data Flash array. Erasing the row sets all bits to '1'. If the row resides in a region that is locked, the erase will not be performed and the Lock Error bit in the Status register (STATUS.LOCKE) will be set.

26.5.4.5.1 Procedure for Erase Row

- Write the address of the row to erase to ADDR. Any address within the row can be used.
- Issue an Erase Row command.

Note: The NVM Address bit field in the Address register (ADDR.ADDR) uses 16-bit addressing.

26.5.4.6 Lock and Unlock Region

These commands are used to lock and unlock regions as detailed in section 26.5.3 Region Lock Bits.

26.5.4.7 Set and Clear Power Reduction Mode

The NVM Controller and block can be taken in and out of power reduction mode through the Set and Clear Power Reduction Mode commands. When the NVM Controller and block are in power reduction mode, the Power Reduction Mode bit in the Status register (STATUS.PRM) is set.

26.5.5 NVM User Configuration

The NVM user configuration resides in the auxiliary space. Refer to the Physical Memory Map of the device for calibration and auxiliary space address mapping (Refer to 8.3 NVM User Row Mapping for more information).

The bootloader resides in the main array starting at offset zero. The allocated boot loader section is write-protected.

Table 26-2. Boot Loader Size

BOOTPROT [2:0]	Rows Protected by BOOTPROT	Boot Loader Size in Bytes
0x7(1)	None	0
0x6	2	512
0x5	4	1024
0x4	8	2048
0x3	16	4096
0x2	32	8192
0x1	64	16384
0x0	128	32768

Note:

1. Default value is 0x7.

26.5.6 Security Bit and Chip Erase Hard Lock Bit

The security bit allows the entire chip to be locked from external access for code security. The security bit can be written by a dedicated command, Set Security Bit (SSB). Once set, the only way to clear the security bit is through a debugger Chip Erase command. After issuing the SSB command, the STATUS.PROGE error bit can be checked.

In order to increase the security level it is recommended to enable the internal BODVDD when the security bit is set.

The CEHL bit allows to permanently disable the debugger chip erase feature. It can be written by a dedicated command, Set Chip Erase Hard Lock (SCEHL). CEHL can only be set after the Security Bit has been set. This is a permanent fuse, meaning that once it is set, it is set forever and cannot be reset anymore, therefore removing any possibility to perform a chip erase, reprogram or debug the chip.

The four possible combinations of both bits and their implications are described as follows:

Security Bit = 0 and CEHL = 0:

- Full debugger access is allowed
- If a boot section has been defined in the user row BOOTPROT bit field, then this section is write and erase protected (from the debugger and from the application code running on the target). Note that changes to BOOTPROT are only taken into account after the next reset. Consequently, if a boot code was previously programmed and secured with a BOOTPROT value, then in order to reprogram it and secure it again, the user shall:
  - Disable the boot section protection(BOOTPROT = 0xF) and reset the potentially related region lock bit(s)
  - Reset the chip for the new BOOTPROT value to be taken into account
  - Reprogram the boot section, protect it again by setting BOOTPROT to the appropriate value depending on the boot code size
  - Reset again
- The application code (outside of the boot section) can be reprogrammed
- A debugger chip erase is possible. It will erase the main array (even the potentially protected boot section), the Data Flash, the volatile memory, and the Security Bit.
  Note: The user row containing BOOTPROT is not reset by a debugger chip erase.

Security Bit = 0 and CEHL = 1: this combination is not possible, CEHL cannot be set when Security Bit=0. (This will result in STATUS.PROGE being set)

Security Bit = 1 and CEHL = 0:

- Once Security Bit is set, the only way to clear it is through a debugger chip erase
- The debug access and actions are restricted in this mode (For more information, refer to the DSU Intellectual Property Protection chapter and table 13-6):
  - The debugger chip erase is possible
  - The debugger is not allowed to read and dump the code and data contained in the Flash memory
  - Programming (write/erase) of the Flash (boot code, application code, Data Flash section, auxiliary rows (in particular BOOTPROT in the user row)) is not allowed. It will only be possible after a debugger chip erase, when Security Bit is back to 0.
- The boot and application codes running on the target have full read/write/erase access to the main array, Data Flash section and user and auxiliary rows, except if a boot section is defined with BOOTPROT, in which case, the boot section becomes write/erase protected from the boot code itself and from the application code.

Security Bit = 1 and CEHL = 1:

- Once CEHL is set, it is not possible to reset it. This is a permanent fuse. The part is locked forever and there is no way to come back.
- The same as above still applies, except that chip erase functionality is disabled forever
- CEHL status is visible in DSU STATUS2:CEHL

Defining a protected boot section, setting the Security Bit and the CEHL bit allows for a global secure boot solution with an immutable boot loader section. The boot loader may for example embed public keys or certificates for supporting secure boot loading algorithms or secure update of the main application code.

26.5.7 Cache

The NVM Controller cache reduces the device power consumption and improves system performance when wait states are required. The NVM main array and the Data Flash address spaces are cached. It is a direct-mapped cache that implements 8 lines of 64 bits (i.e., 64 Bytes). NVM Controller cache can be enabled by writing a '0' to the Cache Disable bit in the Control B register (CTRLB.CACHEDIS).

The cache can be configured to three different modes using the Read Mode bit group in the Control B register (CTRLB.READMODE).

The INVALL command can be issued using the Command bits in the Control A register to invalidate all cache lines (CTRLA.CMD = INVALL). Commands affecting NVM content automatically invalidate cache lines.

26.6 Register Summary

Offset	Name	Bit Pos.	7	6	5	4	3	2	1	0
0x00	CTRLA	7:0		CMD[6:0]						
		15:8	CMDEX[7:0]							
0x02 ... 0x03	Reserved									
0x04	CTRLB	7:0	MANW			RWS[3:0]				
		15:8							SLEEPPRM[1:0]	
		23:16					CACHEDIS[1:0]		READMODE[1:0]	
		31:24								
0x08	PARAM	7:0	NVMP[7:0]							
		15:8	NVMP[15:8]							
		23:16	DFP[3:0]					PSZ[2:0]		
		31:24	DFP[11:4]							
0x0C	INTENCLR	7:0							ERROR	READY
		15:8								
		23:16								
		31:24								
0x10	INTENSET	7:0							ERROR	READY
		15:8								
		23:16								
		31:24								
0x14	INTFLAG	7:0							ERROR	READY
		15:8								
		23:16								
		31:24								
0x18	STATUS	7:0				NVME	LOCKE	PROGE	LOAD	PRM
		15:8								SB
0x1A ... 0x1B	Reserved									
0x1C	ADDR	7:0	ADDR[7:0]							
		15:8	ADDR[15:8]							
		23:16			ADDR[21:16]					
		31:24								
0x20	LOCK	7:0	LOCK[7:0]							
		15:8	LOCK[15:8]							
0x22 ... 0x27	Reserved									
0x28	PBLDATA0	7:0	PBLDATA[7:0]							
		15:8	PBLDATA[15:8]							
		23:16	PBLDATA[23:16]							
		31:24	PBLDATA[31:24]							
0x2C	PBLDATA1	7:0	PBLDATA[7:0]							
		15:8	PBLDATA[15:8]							
		23:16	PBLDATA[23:16]							
		31:24	PBLDATA[31:24]							

26.6.1 Control A

Name: CTRLA
Offset: 0x00
Reset: 0x0000
Property: PAC Write-Protection

Bit	15	14	13	12	11	10	9	8
	CMDEX[7:0]							
Access	R/W	R/W	R/W	R/W	R/W	R/W	R/W	R/W
Reset	0	0	0	0	0	0	0	0

Bit	7	6	5	4	3	2	1	0
		CMD[6:0]						
Access		R/W	R/W	R/W	R/W	R/W	R/W	R/W
Reset		0	0	0	0	0	0	0

Bits 15:8 – CMDEX[7:0] Command Execution
When this bit group is written to the key value 0xA5, the command written to CMD will be executed. If a value different from the key value is tried, the write will not be performed and the Programming Error bit in the Status register (STATUS.PROGE) will be set. PROGE is also set if a previously written command is not completed yet.
The key value must be written at the same time as CMD. If a command is issued through the APB bus on the same cycle as an AHB bus access, the AHB bus access will be given priority. The command will then be executed when the NVM block and the AHB bus are idle.
INTFLAG.READY must be '1' when the command is issued.
Bit 0 of the CMDEX bit group will read back as '1' until the command is issued.
Note: The NVM Address bit field in the Address register (ADDR.ADDR) uses 16-bit addressing.

Bits 6:0 – CMD[6:0] Command
These bits define the command to be executed when the CMDEX key is written.

CMD[6:0]	Group Configuration	Description
0x00-0x01	-	Reserved
0x02	ER	Erase Row - Erases the row addressed by the ADDR register in the NVM main array.
0x03	-	Reserved
0x04	WP	Write Page - Writes the contents of the page buffer to the page addressed by the ADDR register.
0x05	EAR	Erase Auxiliary Row - Erases the auxiliary row addressed by the ADDR register. This command can be given only when the Security bit is not set and only to the User Configuration Row.
0x06	WAP	Write Auxiliary Page - Writes the contents of the page buffer to the page addressed by the ADDR register. This command can be given only when the Security bit is not set and only to the User Configuration Row.
0x07-0x19	-	Reserved
0x1A	DFER	Data Flash Erase Row - Erases the row addressed by the ADDR register in the Data Flash.
0x1B	-	Reserved
0x1C	DFWP	Data Flash Write Page - Writes the contents of the page buffer to the page addressed by the ADDR register in the Data Flash.
0x1D-0x3F	-	Reserved
0x40	LR	Lock Region - Locks the region containing the address location in the ADDR register.
0x41	UR	Unlock Region - Unlocks the region containing the address location in the ADDR register.

.....continued

CMD[6:0]	Group Configuration	Description
0x42	SPRM	Sets the Power Reduction mode.
0x43	CPRM	Clears the Power Reduction mode.
0x44	PBC	Page Buffer Clear - Clears the page buffer.
0x45	SSB	Set Security Bit - Sets the Security bit.
0x46	INVALL	Invalidates all cache lines.
0x47-0x7E	-	Reserved
0x7F	SCEHL	Set Chip Erase Hard Lock. Sets the CEHL bit and permanently disables the Chip-Erase feature. This command can only be issued once the Security Bit has been set with the SSB command. Once set, it is not possible to erase it anymore.

26.6.2 Control B

Name: CTRLB
Offset: 0x04
Reset: 0x00000080
Property: PAC Write-Protection

Bit	31	30	29	28	27	26	25	24
Access								
Reset								

Bit	23	22	21	20	19	18	17	16
					CACHEDIS[1:0]		READMODE[1:0]	
Access					R/W	R/W	R/W	R/W
Reset					0	0	0	0

Bit	15	14	13	12	11	10	9	8
							SLEEPPRM[1:0]	
Access							R/W	R/W
Reset							0	0

Bit	7	6	5	4	3	2	1	0
	MANW			RWS[3:0]				
Access	R/W			R/W	R/W	R/W	R/W	
Reset	1			0	0	0	0	

Bits 19:18 – CACHEDIS[1:0] Cache Disable
This bit is used to disable the cache.

Value	Description
0x3	The Data Flash cache is enabled, the main array cache is disabled
0x2	The Data Flash cache is enabled, the main array cache is enabled
0x1	The Data Flash cache is disabled, the main array cache is disabled
0x0	The Data Flash cache is disabled, the main array cache is enabled

Bits 17:16 – READMODE[1:0] NVMCTRL Read Mode

Value	Name	Description
0x0	NO_MISS_PENALTY	The NVM Controller (cache system) does not insert wait states on a cache miss. Gives the best system performance.
0x1	LOW_POWER	Reduces power consumption of the cache system, but inserts a wait state each time there is a cache miss. This mode may not be relevant if CPU performance is required, as the application will be stalled and may lead to increased run time.
0x2	DETERMINISTIC	The cache system ensures that a cache hit or miss takes the same amount of time, determined by the number of programmed Flash wait states. This mode can be used for real-time applications that require deterministic execution timings.
0x3	Reserved	

Bits 9:8 – SLEEPPRM[1:0] Power Reduction Mode during Sleep
Indicates the Power Reduction Mode during sleep.

Value	Name	Description
0x0	WAKEONACCESS	NVM block enters low-power mode when entering sleep. NVM block exits low-power mode upon first access.
0x1	WAKEUPINSTANT	NVM block enters low-power mode when entering sleep. NVM block exits low-power mode when exiting sleep.

Value	Name	Description
0x2	Reserved	
0x3	DISABLED	Auto power reduction disabled.

Bit 7 – MANW Manual Write
Note that reset value of this bit is '1'.

Value	Description
0	Writing to the last word in the page buffer will initiate a write operation to the page addressed by the last write operation. This includes writes to memory and auxiliary rows.
1	Write commands must be issued through the CTRLA.CMD register.

Bits 4:1 – RWS[3:0] NVM Read Wait States
These bits control the number of wait states for a read operation. '0' indicates zero wait states, '1' indicates one wait state, etc., up to 15 wait states.
This register is initialized to 0 wait states. Software can change this value based on the NVM access time and system frequency. Refer to NVM Max Speed Characteristics in the 43. Electrical Characteristics chapter.

26.6.3 NVM Parameter

Name: PARAM
Offset: 0x08
Reset: 0x000XXXXX
Property: PAC Write-Protection

Bit	31	30	29	28	27	26	25	24
	DFP[11:4]							
Access	R	R	R	R	R	R	R	R
Reset	0	0	0	0	0	0	0	0

Bit	23	22	21	20	19	18	17	16
	DFP[3:0]					PSZ[2:0]		
Access	R	R	R	R		R	R	R
Reset	0	0	0	0		x	x	x

Bit	15	14	13	12	11	10	9	8
	NVMP[15:8]							
Access	R	R	R	R	R	R	R	R
Reset	x	x	x	x	x	x	x	x

Bit	7	6	5	4	3	2	1	0
	NVMP[7:0]							
Access	R	R	R	R	R	R	R	R
Reset	x	x	x	x	x	x	x	x

Bits 31:20 – DFP[11:0] Data Flash Pages
Indicates the number of pages in the Data Flash section.

Bits 18:16 – PSZ[2:0] Page Size
Indicates the page size. Not all devices of the device families will provide all the page sizes indicated in the table.

Value	Name	Description
0x0	8	8 bytes
0x1	16	16 bytes
0x2	32	32 bytes
0x3	64	64 bytes
0x4	128	128 bytes
0x5	256	256 bytes
0x6	512	512 bytes
0x7	1024	1024 bytes

Bits 15:0 – NVMP[15:0] NVM Pages
Indicates the number of pages in the NVM main array.

26.6.4 Interrupt Enable Clear

Name: INTENCLR
Offset: 0x0C
Reset: 0x00
Property: PAC Write-Protection

This register allows the user to disable an interrupt without doing a read-modify-write operation. Changes in this register will also be reflected in the Interrupt Enable Set register (INTENSET).

Bit	31	30	29	28	27	26	25	24
Access								
Reset								

Bit	23	22	21	20	19	18	17	16
Access								
Reset								

Bit	15	14	13	12	11	10	9	8
Access								
Reset								

Bit	7	6	5	4	3	2	1	0
							ERROR	READY
Access							R/W	R/W
Reset							0	0

Bit 1 – ERROR Error Interrupt Enable
Writing a '0' to this bit has no effect.
Writing a '1' to this bit clears the ERROR interrupt enable.
This bit will read as the current value of the ERROR interrupt enable.

Bit 0 – READY NVM Ready Interrupt Enable
Writing a '0' to this bit has no effect.
Writing a '1' to this bit clears the READY interrupt enable.
This bit will read as the current value of the READY interrupt enable.

26.6.5 Interrupt Enable Set

Name: INTENSET
Offset: 0x10
Reset: 0x00
Property: PAC Write-Protection

This register allows the user to enable an interrupt without doing a read-modify-write operation. Changes in this register will also be reflected in the Interrupt Enable Clear register (INTENCLR).

Bit	31	30	29	28	27	26	25	24
Access								
Reset								

Bit	23	22	21	20	19	18	17	16
Access								
Reset								

Bit	15	14	13	12	11	10	9	8
Access								
Reset								

Bit	7	6	5	4	3	2	1	0
							ERROR	READY
Access							R/W	R/W
Reset							0	0

Bit 1 – ERROR Error Interrupt Enable
Writing a '0' to this bit has no effect.
Writing a '1' to this bit sets the ERROR interrupt enable.
This bit will read as the current value of the ERROR interrupt enable.

Bit 0 – READY NVM Ready Interrupt Enable
Writing a '0' to this bit has no effect.
Writing a '1' to this bit sets the READY interrupt enable.
This bit will read as the current value of the READY interrupt enable.

26.6.6 Interrupt Flag Status and Clear

Name: INTFLAG
Offset: 0x14
Reset: 0x00
Property: –

Bit	31	30	29	28	27	26	25	24
Access								
Reset								

Bit	23	22	21	20	19	18	17	16
Access								
Reset								

Bit	15	14	13	12	11	10	9	8
Access								
Reset								

Bit	7	6	5	4	3	2	1	0
							ERROR	READY
Access							R/W	R
Reset							0	0

Bit 1 – ERROR Error
This flag is set on the occurrence of an NVME, LOCKE or PROGE error.
This bit can be cleared by writing a '1' to its bit location.

Value	Description
0	No errors have been received since the last clear.
1	At least one error has occurred since the last clear.

Bit 0 – READY NVM Ready

Value	Description
0	The NVM controller is busy programming or erasing.
1	The NVM controller is ready to accept a new command.

26.6.7 Status

Name: STATUS
Offset: 0x18
Reset: 0x0X00
Property: –

Bit	15	14	13	12	11	10	9	8
								SB
Access								R
Reset								x

Bit	7	6	5	4	3	2	1	0
				NVME	LOCKE	PROGE	LOAD	PRM
Access				R/W	R/W	R/W	R/W	R
Reset				0	0	0	0	0

Bit 8 – SB Security Bit Status

Important: Once set, this bit can only be cleared by a debugger chip erase.

Value	Description
0	The Security bit is inactive.
1	The Security bit is active.

Bit 4 – NVME NVM Error
This bit can be cleared by writing a '1' to its bit location.

Value	Description
0	No programming or erase errors have been received from the NVM controller since this bit was last cleared.
1	At least one error has been registered from the NVM Controller since this bit was last cleared.

Bit 3 – LOCKE Lock Error Status
This bit can be cleared by writing a '1' to its bit location.

Value	Description
0	No programming of any locked lock region has happened since this bit was last cleared.
1	Programming of at least one locked lock region has happened since this bit was last cleared.

Bit 2 – PROGE Programming Error Status
This bit can be cleared by writing a '1' to its bit location.

Value	Description
0	No invalid commands or bad keywords were written in the NVM Command register since this bit was last cleared.
1	An invalid command and/or a bad keyword was/were written in the NVM Command register since this bit was last cleared.

Bit 1 – LOAD NVM Page Buffer Active Loading
This bit indicates that the NVM page buffer has been loaded with one or more words. Immediately after an NVM load has been performed, this flag is set. It remains set until a page write or a page buffer clear (PBCLR) command is given.
This bit can be cleared by writing a '1' to its bit location.

Bit 0 – PRM Power Reduction Mode
This bit indicates the current NVM power reduction state. The NVM block can be set in power reduction mode in two ways: through the command interface or automatically when entering sleep with SLEEPPRM set accordingly.
PRM can be cleared in three ways: through AHB access to the NVM block, through the command interface (SPRM and CPRM) or when exiting sleep with SLEEPPRM set accordingly.

Value	Description
0	NVM is not in power reduction mode.
1	NVM is in power reduction mode.

26.6.8 Address

Name: ADDR
Offset: 0x1C
Reset: 0x00000000
Property: PAC Write-Protection

Bit	31	30	29	28	27	26	25	24
Access								
Reset								

Bit	23	22	21	20	19	18	17	16
			ADDR[21:16]					
Access			R/W	R/W	R/W	R/W	R/W	R/W
Reset			0	0	0	0	0	0

Bit	15	14	13	12	11	10	9	8
	ADDR[15:8]							
Access	R/W	R/W	R/W	R/W	R/W	R/W	R/W	R/W
Reset	0	0	0	0	0	0	0	0

Bit	7	6	5	4	3	2	1	0
	ADDR[7:0]							
Access	R/W	R/W	R/W	R/W	R/W	R/W	R/W	R/W
Reset	0	0	0	0	0	0	0	0

Bits 21:0 – ADDR[21:0] NVM Address
ADDR drives the hardware (16-bit) address to the NVM when a command is executed using CMDEX. This register is also automatically updated when writing to the page buffer.

26.6.9 Lock Section

Name: LOCK
Offset: 0x20
Reset: X determined from NVM User Row
Property: –

Bit	15	14	13	12	11	10	9	8
	LOCK[15:8]							
Access	R	R	R	R	R	R	R	R
Reset	x	x	x	x	x	x	x	x

Bit	7	6	5	4	3	2	1	0
	LOCK[7:0]							
Access	R	R	R	R	R	R	R	R
Reset	x	x	x	x	x	x	x	x

Bits 15:0 – LOCK[15:0] Region Lock Bits
To set or clear these bits, the CMD register must be used.
Default state after erase will be unlocked (0xFFFF).

Value	Description
0	The corresponding lock region is locked.
1	The corresponding lock region is not locked.

26.6.10 Page Buffer Load Data 0

Name: PBLDATA0
Offset: 0x28
Reset: 0xFFFFFFFF
Property: -

Bit	31	30	29	28	27	26	25	24
	PBLDATA[31:24]							
Access	R	R	R	R	R	R	R	R
Reset	1	1	1	1	1	1	1	1

Bit	23	22	21	20	19	18	17	16
	PBLDATA[23:16]							
Access	R	R	R	R	R	R	R	R
Reset	1	1	1	1	1	1	1	1

Bit	15	14	13	12	11	10	9	8
	PBLDATA[15:8]							
Access	R	R	R	R	R	R	R	R
Reset	1	1	1	1	1	1	1	1

Bit	7	6	5	4	3	2	1	0
	PBLDATA[7:0]							
Access	R	R	R	R	R	R	R	R
Reset	1	1	1	1	1	1	1	1

Bits 31:0 – PBLDATA[31:0] Page Buffer Load Data
The PBLDATA register is a holding register for partial AHB writes to the same 64-bit page buffer section. Page buffer loads are performed on a 64-bit basis.
This is a read only register.

26.6.11 Page Buffer Load Data 1

Name: PBLDATA1
Offset: 0x2C
Reset: 0xFFFFFFFF
Property: -

Bit	31	30	29	28	27	26	25	24
	PBLDATA[31:24]							
Access	R	R	R	R	R	R	R	R
Reset	1	1	1	1	1	1	1	1

Bit	23	22	21	20	19	18	17	16
	PBLDATA[23:16]							
Access	R	R	R	R	R	R	R	R
Reset	1	1	1	1	1	1	1	1

Bit	15	14	13	12	11	10	9	8
	PBLDATA[15:8]							
Access	R	R	R	R	R	R	R	R
Reset	1	1	1	1	1	1	1	1

Bit	7	6	5	4	3	2	1	0
	PBLDATA[7:0]							
Access	R	R	R	R	R	R	R	R
Reset	1	1	1	1	1	1	1	1

Bits 31:0 – PBLDATA[31:0] Page Buffer Load Data (Bits 63:32])
The PBLDATA register is a holding register for partial AHB writes to the same 64-bit page buffer section. Page buffer loads are performed on a 64-bit basis.
This is a read only register.

27. I/O Pin Controller (PORT)

27.1 Overview

The I/O Pin Controller (PORT) controls the I/O pins of the device. The I/O pins are organized in a series of groups, collectively referred to as a PORT group. Each PORT group can have up to 32 pins that can be configured and controlled individually or as a group. The number of PORT groups on a device may depend on the package/number of pins. Each pin may either be used for general-purpose I/O under direct application control or be assigned to an embedded device peripheral. When used for general-purpose I/O, each pin can be configured as input or output, with highly configurable driver and pull settings.

All I/O pins have true read-modify-write functionality when used for general-purpose I/O; the direction or the output value of one or more pins may be changed (set, reset or toggled) explicitly without unintentionally changing the state of any other pins in the same port group by a single, atomic 8-, 16- or 32-bit write.

The PORT is connected to the high-speed bus matrix through an AHB/APB bridge. The Pin Direction, Data Output Value and Data Input Value registers may also be accessed using the low-latency CPU local bus (IOBUS; ARM® single-cycle I/O port).

27.2 Features

- Selectable Input and Output Configuration for Each Individual Pin
- Software-controlled Multiplexing of Peripheral Functions on I/O Pins
- Flexible Pin Configuration Through a Dedicated Pin Configuration Register
- Configurable Output Driver and Pull Settings:
  - Totem-pole (push-pull)
  - Pull configuration
  - Driver strength
- Configurable Input Buffer and Pull Settings:
  - Internal pull-up or pull-down
  - Input sampling criteria
  - Input buffer can be disabled if not needed for lower power consumption
  - Read-Modify-Write support for output value (OUTCLR/OUTSET/OUTTGL) and pin direction (DIRCLR/DIRSET/DIRTGL)
- Input Event:
  - Up to four input event pins for each PORT group
  - SET/CLEAR/TOGGLE event actions for each event input on output value of a pin
  - Can be output to pin

27.3 Block Diagram

Figure 27-1. PORT Block Diagram

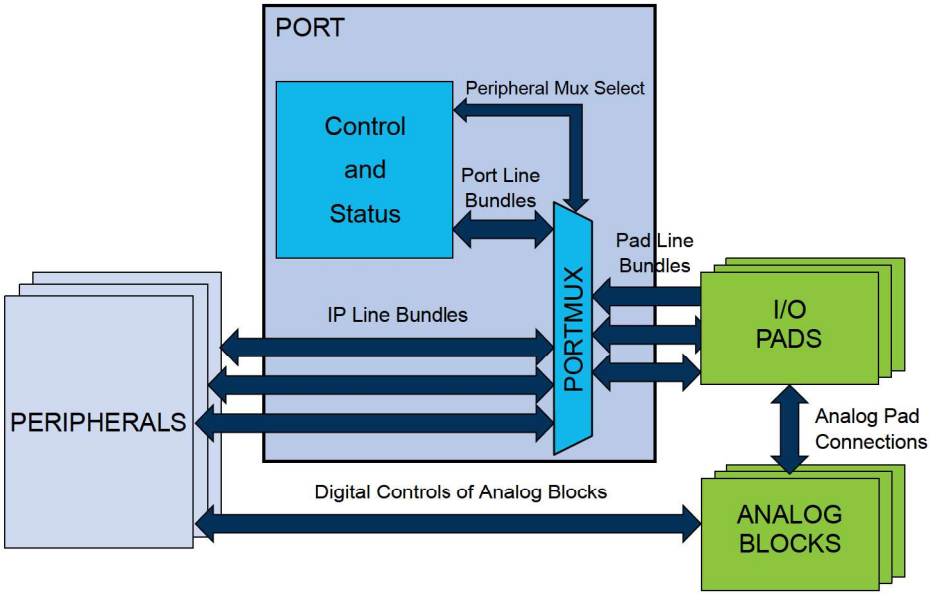

27.4 Signal Description

Table 27-1. Signal description for PORT

Signal name	Type	Description
Pxy	Digital I/O	General-purpose I/O pin y in group x

Refer to the Pinout for details on the pin mapping for this peripheral. One signal can be mapped on several pins.

27.5 Peripheral Dependencies

Peripheral	Base Address	IRQ	AHB CLK	APB CLK	Generic CLK	PAC		Events		DMA	Sleep Walking
			Enabled at reset	Enabled at reset	Index	Index	Prot at reset	User	Generator	Index	
PORT	0x41000000	-	-	Y	-	0	N	1-4: EV0-3	-	-	Y

27.6 Functional Description

Figure 27-2. Overview of the PORT

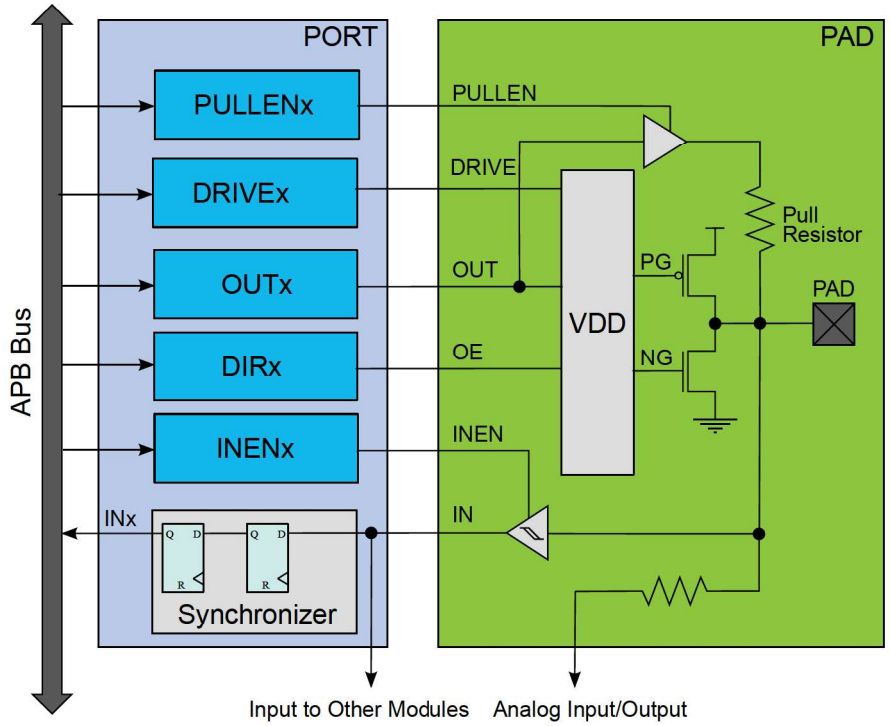

27.6.1 Principle of Operation

Each PORT group of up to 32 pins is controlled by the registers in PORT, as described in the figure. These registers in PORT are duplicated for each PORT group, with increasing base addresses using an offset of 0x80 between groups. The number of PORT groups may depend on the package/number of pins.

Figure 27-3. Overview of the peripheral functions multiplexing

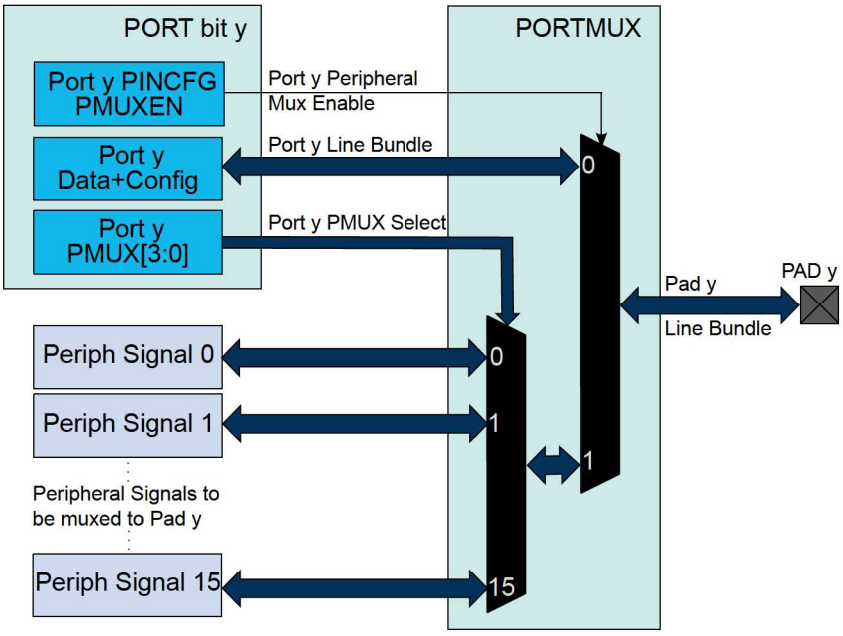

The I/O pins of the device are controlled by PORT peripheral registers. Each port pin has a corresponding bit in the Data Direction (DIR) and Data Output Value (OUT) registers to enable that pin as an output and to define the output state.

The direction of each pin in a PORT group is configured by the DIR register. If a bit in DIR is set to '1', the corresponding pin is configured as an output pin. If a bit in DIR is set to '0', the corresponding pin is configured as an input pin.

When the direction is set as output, the corresponding bit in the OUT register will set the level of the pin. If bit y in OUT is written to '1', pin y is driven HIGH. If bit y in OUT is written to '0', pin y is driven LOW. Pin configuration can be set by Pin Configuration (PINCFGy) registers, with y=00, 01, ..31 representing the pin position within the group.

The Data Input Value (IN) is set as the input value of a port pin with resynchronization to the PORT clock. To reduce power consumption, these input synchronizers can be clocked only when system requires reading the input value, as specified in the SAMPLING field of the Control register (CTRL). The value of the pin can always be read, whether the pin is configured as input or output. If the Input Enable bit in the Pin Configuration registers (PINCFGy.INEN) is '0', the input value will not be sampled.

In PORT, the Peripheral Multiplexer Enable bit in the PINCFGy register (PINCFGy.PMUXEN) can be written to '1' to enable the connection between peripheral functions and individual I/O pins. The Peripheral Multiplexing n (PMUXn) registers select the peripheral function for the corresponding pin. This will override the connection between the PORT and that I/O pin, and connect the selected peripheral signal to the particular I/O pin instead of the PORT line bundle.

27.6.2 Basic Operation

27.6.2.1 Initialization

After reset, all standard function device I/O pads are connected to the PORT with outputs tri-stated and input buffers disabled, even if there is no clock running.

However, specific pins, such as those used for connection to a debugger, may be configured differently, as required by their special function.

27.6.2.2 Operation

Each I/O pin Pxy can be controlled by the registers in PORT. Each PORT group x has its own set of PORT registers, with a base address at byte address (PORT + 0x80 * group index) (A corresponds to group index 0, B to 1, etc...). Within that set of registers, the pin index is y, from 0 to 31.

Refer to the 4. Pinout and Packaging for details on available pin configuration and PORT groups.

Configuring Pins as Output

To use pin Pxy as an *output*, write bit y of the DIR register to '1'. This can also be done by writing bit y in the DIRSET register to '1' - this will avoid disturbing the configuration of other pins in that group. The y bit in the OUT register must be written to the desired output value.

Similarly, writing an OUTSET bit to '1' will set the corresponding bit in the OUT register to '1'. Writing a bit in OUTCLR to '1' will set that bit in OUT to zero. Writing a bit in OUTTGL to '1' will toggle that bit in OUT.

Configuring Pins as Input

To use pin Pxy as an *input*, bit y in the DIR register must be written to '0'. This can also be done by writing bit y in the DIRCLR register to '1' - this will avoid disturbing the configuration of other pins in that group. The input value can be read from bit y in register IN as soon as the INEN bit in the Pin Configuration register (PINCFGy.INEN) is written to '1'.

By default, the input synchronizer is clocked only when an input read is requested. This will delay the read operation by two cycles of the PORT clock. To remove the delay, the input synchronizers for each PORT group of eight pins can be configured to be always active, but this will increase power consumption. This is enabled by writing '1' to the corresponding SAMPLINGn bit field of the CTRL register, see CTRL.SAMPLING for details.

Using Alternative Peripheral Functions

To use pin Pxy as one of the available peripheral functions, the corresponding PMUXEN bit of the PINCFGy register must be '1'. The PINCFGy register for pin Pxy is at byte offset (PINCFG0 + y).

The peripheral function can be selected by setting the PMUXO or PMUXE in the PMUXn register. The PMUXO/PMUXE is at byte offset PMUX0 + (y/2). The chosen peripheral must also be configured and enabled.

27.6.3 I/O Pin Configuration

The Pin Configuration register (PINCFGy) is used for additional I/O pin configuration. A pin can be set in a totem-pole or pull configuration.

As pull configuration is done through the Pin Configuration register, all intermediate PORT states during switching of pin direction and pin values are avoided.

The I/O pin configurations are described further in this chapter, and summarized in Table 27-2.

27.6.3.1 Pin Configurations Summary

Table 27-2. Pin Configurations Summary

DIR	INEN	PULLEN	OUT	Configuration
0	0	0	X	Reset or analog I/O: all digital disabled
0	0	1	0	Pull-down; input buffer disabled
0	0	1	1	Pull-up; input buffer disabled
0	1	0	X	Input
0	1	1	0	Input with pull-down
0	1	1	1	Input with pull-up
1	0	X	X	Output; input buffer disabled
1	1	X	X	Output; input enabled

27.6.3.2 Input Configuration

Figure 27-4. I/O configuration - Standard Input

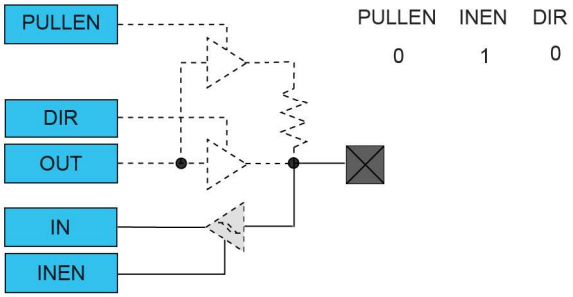

Figure 27-5. I/O Configuration - Input with Pull

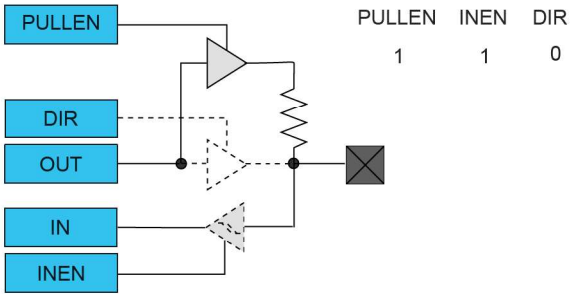

Note: When pull is enabled, the pull value is defined by the OUT value.

27.6.3.3 Totem-Pole Output

When configured for totem-pole (push-pull) output, the pin is driven low or high according to the corresponding bit setting in the OUT register. In this configuration there is no current limitation for sink or source other than what the pin is capable of. If the pin is configured for input, the pin will float if no external pull is connected.

Note: Enabling the output driver will automatically disable pull.

Figure 27-6. I/O Configuration - Totem-Pole Output with Disabled Input

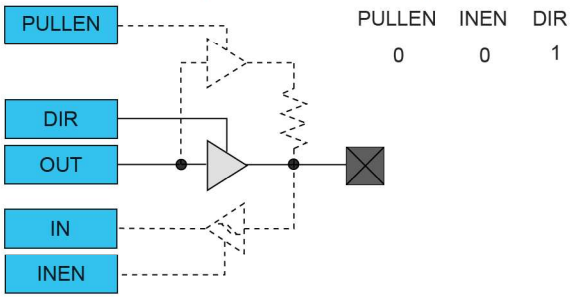

Figure 27-7. I/O Configuration - Totem-Pole Output with Enabled Input

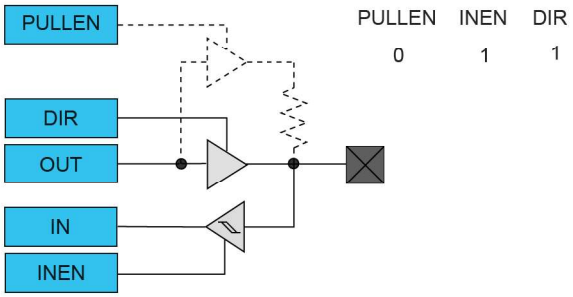

Figure 27-8. I/O Configuration - Output with Pull

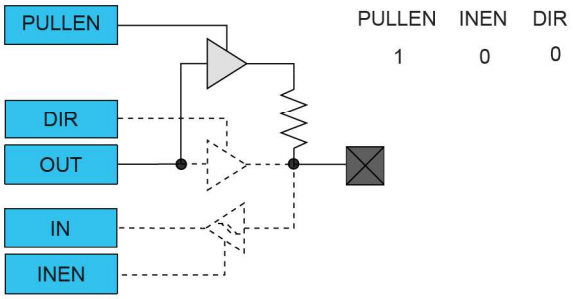

27.6.3.4 Digital Functionality Disabled

Neither Input nor Output functionality are enabled.

Figure 27-9. I/O Configuration - Reset or Analog I/O: Digital Output, Input and Pull Disabled

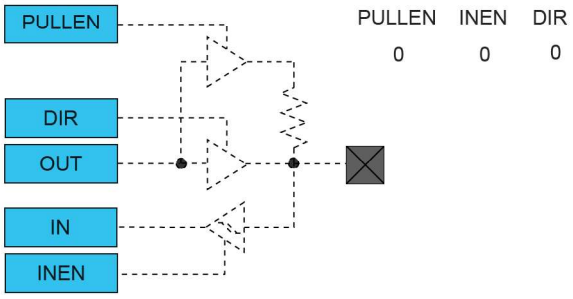

27.6.4 Events

The PORT allows input events to control individual I/O pins. These input events are generated by the EVSYS module and can originate from a different clock domain than the clock domain of the PORT module.

The PORT can perform the following actions:

- Output (OUT): I/O pin will be set when the incoming event has a high level ('1') and cleared when the incoming event has a low-level ('0').
- Set (SET): I/O pin will be set when an incoming event is detected.
- Clear (CLR): I/O pin will be cleared when an incoming event is detected.
- Toggle (TGL): I/O pin will toggle when an incoming event is detected.

The OUTPUT event is sent to the pin without any internal latency. For SET, CLEAR and TOGGLE event actions, the action will be executed up to three clock cycles after a rising edge.

The event actions can be configured with the Event Action m bit group in the Event Input Control register(EVCTRL.EVACTm). Writing a '1' to a PORT Event Enable Input m of the Event Control register (EVCTRL.PORTEIm) enables the corresponding action on input event. Writing '0' to this bit disables the corresponding action on input event. Note that several actions can be enabled for incoming events. If several events are connected to the peripheral, any enabled action will be taken for any of the incoming events. Refer to EVSYS – Event System. for details on configuring the Event System.

Each event input can address one and only one I/O pin at a time. The selection of the pin is indicated by the PORT Event Pin Identifier of the Event Input Control register (EVCTR.PIDn). On the other hand, one I/O pin can be addressed by up to four different input events. To avoid action conflict on the output value of the register (OUT) of this particular I/O pin, only one action is performed according to the table below.

Note that this truth table can be applied to any SET/CLR/TGL configuration from two to four active input events.

Table 27-3. Priority on Simultaneous SET/CLR/TGL Event Actions

EVACT0	EVACT1	EVACT2	EVACT3	Executed Event Action
SET	SET	SET	SET	SET
CLR	CLR	CLR	CLR	CLR
All Other Combinations				TGL

Be careful when the event is output to pin. Due to the fact the events are received asynchronously, the I/O pin may have unpredictable levels, depending on the timing of when the events are received. When several events are output to the same pin, the lowest event line will get the access. All other events will be ignored.

27.6.5 PORT Access Priority

The PORT is accessed by the following systems:

- The Arm CPU through the Arm single-cycle I/O port (IOBUS)
- The Arm CPU through the high-speed matrix and the AHB/APB bridge (APB)
- EVSYS through four asynchronous input events

The CPU local bus (IOBUS) is an interface that connects the CPU to the PORT. It is a single-cycle bus interface, which does not support wait states. It supports 8-bit, 16-bit and 32-bit sizes.

This bus is generally used for low-latency operation. The Data Direction (DIR) and Data Output Value (OUT) registers can be read, write, set, cleared or toggled using this bus, and the Data Input Value (IN) registers can be read.

Because the IOBUS cannot wait for the IN register resynchronization, the Control register (CTRL) must be configured to continuous sampling of all pins that need to be read through the IOBUS to prevent stale data from being read.

IOBUS writes are not prevented to PAC write-protected registers when the PORT module is PAC protected.

Note: Refer to 7. Product Mapping for the PORT IOBUS address.

The following priority is adopted:

1. Arm CPU IOBUS (No wait tolerated)

2. APB
3. EVSYS input events, except for events with EVCTRL.EVACTx = OUT, where the output pin follows the event input signal, independently of the OUT register value.

Note: One clock cycle latency can be observed on the APB access in case of concurrent PORT accesses.

For input events that require different actions on the same I/O pin, refer to 27.6.4 Events.

27.7 Register Summary

The I/O pins are assembled in pin groups with up to 32 pins. Group 0 consists of the PA pins, and group 1 is for the PB pins, etc. Each pin group has its own PORT registers, with a 0x80 address spacing between groups. For example, the register address offset for the Data Direction (DIR) register for group 0 (PA00 to PA31) is 0x00, and the register address offset for the DIR register for group 1 (PB00 to PB31) is 0x80.

Offset	Name	Bit Pos.	7	6	5	4	3	2	1	0
0x00	DIR	7:0	DIR[7:0]							
		15:8	DIR[15:8]							
		23:16	DIR[23:16]							
		31:24	DIR[31:24]							
0x04	DIRCLR	7:0	DIRCLR[7:0]							
		15:8	DIRCLR[15:8]							
		23:16	DIRCLR[23:16]							
		31:24	DIRCLR[31:24]							
0x08	DIRSET	7:0	DIRSET[7:0]							
		15:8	DIRSET[15:8]							
		23:16	DIRSET[23:16]							
		31:24	DIRSET[31:24]							
0x0C	DIRTGL	7:0	DIRTGL[7:0]							
		15:8	DIRTGL[15:8]							
		23:16	DIRTGL[23:16]							
		31:24	DIRTGL[31:24]							
0x10	OUT	7:0	OUT[7:0]							
		15:8	OUT[15:8]							
		23:16	OUT[23:16]							
		31:24	OUT[31:24]							
0x14	OUTCLR	7:0	OUTCLR[7:0]							
		15:8	OUTCLR[15:8]							
		23:16	OUTCLR[23:16]							
		31:24	OUTCLR[31:24]							
0x18	OUTSET	7:0	OUTSET[7:0]							
		15:8	OUTSET[15:8]							
		23:16	OUTSET[23:16]							
		31:24	OUTSET[31:24]							
0x1C	OUTTGL	7:0	OUTTGL[7:0]							
		15:8	OUTTGL[15:8]							
		23:16	OUTTGL[23:16]							
		31:24	OUTTGL[31:24]							
0x20	IN	7:0	IN[7:0]							
		15:8	IN[15:8]							
		23:16	IN[23:16]							
		31:24	IN[31:24]							
0x24	CTRL	7:0	SAMPLING[7:0]							
		15:8	SAMPLING[15:8]							
		23:16	SAMPLING[23:16]							
		31:24	SAMPLING[31:24]							
0x28	WRCONFIG	7:0	PINMASK[7:0]							
		15:8	PINMASK[15:8]							
		23:16		DRVSTR				PULLEN	INEN	PMUXEN
		31:24	HWSEL	WRPINCFG		WRPMUX	PMUX[3:0]			
0x2C	EVCTRL	7:0	PORTEI0	EVACT0[1:0]		PID0[4:0]				
		15:8	PORTEI1	EVACT1[1:0]		PID1[4:0]				
		23:16	PORTEI2	EVACT2[1:0]		PID2[4:0]				
		31:24	PORTEI3	EVACT3[1:0]		PID3[4:0]				
0x30	PMUX0	7:0	PMUXO[3:0]				PMUXE[3:0]			
...										
0x3F	PMUX15	7:0	PMUXO[3:0]				PMUXE[3:0]			
0x40	PINCFG0	7:0		DRVSTR				PULLEN	INEN	PMUXEN

.....continued

Offset	Name	Bit Pos.	7	6	5	4	3	2	1	0
...										
0x5F	PINCFG31	7:0		DRVSTR				PULLEN	INEN	PMUXEN

27.7.1 Data Direction

Name: DIR
Offset: 0x00
Reset: 0x00000000
Property: PAC Write-Protection

This register allows the user to configure one or more I/O pins as an input or output. This register can be manipulated without doing a read-modify-write operation by using the Data Direction Toggle (DIRTGL), Data Direction Clear (DIRCLR) and Data Direction Set (DIRSET) registers.



Tip: The I/O pins are assembled in pin groups ("PORT groups") with up to 32 pins. Group 0 consists of the PA pins, group 1 is for the PB pins, etc. Each pin group has its own PORT registers, with a 0x80 address spacing. For example, the register address offset for the Data Direction (DIR) register for group 0 (PA00 to PA31) is 0x00, and the register address offset for the DIR register for group 1 (PB00 to PB31) is 0x80.

Bit	31	30	29	28	27	26	25	24
	DIR[31:24]							
Access	RW	RW	RW	RW	RW	RW	RW	RW
Reset	0	0	0	0	0	0	0	0

Bit	23	22	21	20	19	18	17	16
	DIR[23:16]							
Access	RW	RW	RW	RW	RW	RW	RW	RW
Reset	0	0	0	0	0	0	0	0

Bit	15	14	13	12	11	10	9	8
	DIR[15:8]							
Access	RW	RW	RW	RW	RW	RW	RW	RW
Reset	0	0	0	0	0	0	0	0

Bit	7	6	5	4	3	2	1	0
	DIR[7:0]							
Access	RW	RW	RW	RW	RW	RW	RW	RW
Reset	0	0	0	0	0	0	0	0

Bits 31:0 – DIR[31:0] Port Data Direction
These bits set the data direction for the individual I/O pins in the PORT group.

Value	Description
0	The corresponding I/O pin in the PORT group is configured as an input.
1	The corresponding I/O pin in the PORT group is configured as an output.

27.7.2 Data Direction Clear

Name: DIRCLR
Offset: 0x04
Reset: 0x00000000
Property: PAC Write-Protection

This register allows the user to set one or more I/O pins as an input, without doing a read-modify-write operation. Changes in this register will also be reflected in the Data Direction (DIR), Data Direction Toggle (DIRTGL) and Data Direction Set (DIRSET) registers.



Tip: The I/O pins are assembled in pin groups ("PORT groups") with up to 32 pins. Group 0 consists of the PA pins, group 1 is for the PB pins, etc. Each pin group has its own PORT registers, with a 0x80 address spacing. For example, the register address offset for the Data Direction (DIR) register for group 0 (PA00 to PA31) is 0x00, and the register address offset for the DIR register for group 1 (PB00 to PB31) is 0x80.

Bit	31	30	29	28	27	26	25	24
	DIRCLR[31:24]							
Access	RW	RW	RW	RW	RW	RW	RW	RW
Reset	0	0	0	0	0	0	0	0

Bit	23	22	21	20	19	18	17	16
	DIRCLR[23:16]							
Access	RW	RW	RW	RW	RW	RW	RW	RW
Reset	0	0	0	0	0	0	0	0

Bit	15	14	13	12	11	10	9	8
	DIRCLR[15:8]							
Access	RW	RW	RW	RW	RW	RW	RW	RW
Reset	0	0	0	0	0	0	0	0

Bit	7	6	5	4	3	2	1	0
	DIRCLR[7:0]							
Access	RW	RW	RW	RW	RW	RW	RW	RW
Reset	0	0	0	0	0	0	0	0

Bits 31:0 – DIRCLR[31:0] Port Data Direction Clear
Writing a '0' to a bit has no effect.
Writing a '1' to a bit will clear the corresponding bit in the DIR register, which configures the I/O pin as an input.

Value	Description
0	The corresponding I/O pin in the PORT group will keep its configuration.
1	The corresponding I/O pin in the PORT group is configured as input.

27.7.3 Data Direction Set

Name: DIRSET
Offset: 0x08
Reset: 0x00000000
Property: PAC Write-Protection

This register allows the user to set one or more I/O pins as an output, without doing a read-modify-write operation. Changes in this register will also be reflected in the Data Direction (DIR), Data Direction Toggle (DIRTGL) and Data Direction Clear (DIRCLR) registers.

Tip: The I/O pins are assembled in pin groups ("PORT groups") with up to 32 pins. Group 0 consists of the PA pins, group 1 is for the PB pins, etc. Each pin group has its own PORT registers, with a 0x80 address spacing. For example, the register address offset for the Data Direction (DIR) register for group 0 (PA00 to PA31) is 0x00, and the register address offset for the DIR register for group 1 (PB00 to PB31) is 0x80.

Bit	31	30	29	28	27	26	25	24
	DIRSET[31:24]							
Access	RW	RW	RW	RW	RW	RW	RW	RW
Reset	0	0	0	0	0	0	0	0

Bit	23	22	21	20	19	18	17	16
	DIRSET[23:16]							
Access	RW	RW	RW	RW	RW	RW	RW	RW
Reset	0	0	0	0	0	0	0	0

Bit	15	14	13	12	11	10	9	8
	DIRSET[15:8]							
Access	RW	RW	RW	RW	RW	RW	RW	RW
Reset	0	0	0	0	0	0	0	0

Bit	7	6	5	4	3	2	1	0
	DIRSET[7:0]							
Access	RW	RW	RW	RW	RW	RW	RW	RW
Reset	0	0	0	0	0	0	0	0

Bits 31:0 – DIRSET[31:0] Port Data Direction Set
Writing '0' to a bit has no effect.
Writing '1' to a bit will set the corresponding bit in the DIR register, which configures the I/O pin as an output.

Value	Description
0	The corresponding I/O pin in the PORT group will keep its configuration.
1	The corresponding I/O pin in the PORT group is configured as an output.

27.7.4 Data Direction Toggle

Name: DIRTGL
Offset: 0x0C
Reset: 0x00000000
Property: PAC Write-Protection

This register allows the user to toggle the direction of one or more I/O pins, without doing a read-modify-write operation. Changes in this register will also be reflected in the Data Direction (DIR), Data Direction Set (DIRSET) and Data Direction Clear (DIRCLR) registers.



Tip: The I/O pins are assembled in pin groups ("PORT groups") with up to 32 pins. Group 0 consists of the PA pins, group 1 is for the PB pins, etc. Each pin group has its own PORT registers, with a 0x80 address spacing. For example, the register address offset for the Data Direction (DIR) register for group 0 (PA00 to PA31) is 0x00, and the register address offset for the DIR register for group 1 (PB00 to PB31) is 0x80.

Bit	31	30	29	28	27	26	25	24
	DIRTGL[31:24]							
Access	RW	RW	RW	RW	RW	RW	RW	RW
Reset	0	0	0	0	0	0	0	0

Bit	23	22	21	20	19	18	17	16
	DIRTGL[23:16]							
Access	RW	RW	RW	RW	RW	RW	RW	RW
Reset	0	0	0	0	0	0	0	0

Bit	15	14	13	12	11	10	9	8
	DIRTGL[15:8]							
Access	RW	RW	RW	RW	RW	RW	RW	RW
Reset	0	0	0	0	0	0	0	0

Bit	7	6	5	4	3	2	1	0
	DIRTGL[7:0]							
Access	RW	RW	RW	RW	RW	RW	RW	RW
Reset	0	0	0	0	0	0	0	0

Bits 31:0 – DIRTGL[31:0] Port Data Direction Toggle
Writing '0' to a bit has no effect.
Writing '1' to a bit will toggle the corresponding bit in the DIR register, which reverses the direction of the I/O pin.

Value	Description
0	The corresponding I/O pin in the PORT group will keep its configuration.
1	The direction of the corresponding I/O pin is toggled.

27.7.5 Data Output Value

Name: OUT
Offset: 0x10
Reset: 0x00000000
Property: PAC Write-Protection

This register sets the data output drive value for the individual I/O pins in the PORT.

This register can be manipulated without doing a read-modify-write operation by using the Data Output Value Clear (OUTCLR), Data Output Value Set (OUTSET), and Data Output Value Toggle (OUTTGL) registers.



Tip: The I/O pins are assembled in pin groups ("PORT groups") with up to 32 pins. Group 0 consists of the PA pins, group 1 is for the PB pins, etc. Each pin group has its own PORT registers, with a 0x80 address spacing. For example, the register address offset for the Data Direction (DIR) register for group 0 (PA00 to PA31) is 0x00, and the register address offset for the DIR register for group 1 (PB00 to PB31) is 0x80.

Bit	31	30	29	28	27	26	25	24
	OUT[31:24]							
Access	RW	RW	RW	RW	RW	RW	RW	RW
Reset	0	0	0	0	0	0	0	0

Bit	23	22	21	20	19	18	17	16
	OUT[23:16]							
Access	RW	RW	RW	RW	RW	RW	RW	RW
Reset	0	0	0	0	0	0	0	0

Bit	15	14	13	12	11	10	9	8
	OUT[15:8]							
Access	RW	RW	RW	RW	RW	RW	RW	RW
Reset	0	0	0	0	0	0	0	0

Bit	7	6	5	4	3	2	1	0
	OUT[7:0]							
Access	RW	RW	RW	RW	RW	RW	RW	RW
Reset	0	0	0	0	0	0	0	0

Bits 31:0 – OUT[31:0] PORT Data Output Value
For pins configured as outputs via the Data Direction register (DIR), these bits set the logical output drive level.
For pins configured as inputs via the Data Direction register (DIR) and with pull enabled via the Pull Enable bit in the Pin Configuration register (PINCFG.PULLEN), these bits will set the input pull direction.

Value	Description
0	The I/O pin output is driven low, or the input is connected to an internal pull-down.
1	The I/O pin output is driven high, or the input is connected to an internal pull-up.

27.7.6 Data Output Value Clear

Name: OUTCLR
Offset: 0x14
Reset: 0x00000000
Property: PAC Write-Protection

This register allows the user to set one or more output I/O pin drive levels low, without doing a read-modify-write operation. Changes in this register will also be reflected in the Data Output Value (OUT), Data Output Value Toggle (OUTTGL) and Data Output Value Set (OUTSET) registers.

Tip: The I/O pins are assembled in pin groups ("PORT groups") with up to 32 pins. Group 0 consists of the PA pins, group 1 is for the PB pins, etc. Each pin group has its own PORT registers, with a 0x80 address spacing. For example, the register address offset for the Data Direction (DIR) register for group 0 (PA00 to PA31) is 0x00, and the register address offset for the DIR register for group 1 (PB00 to PB31) is 0x80.

Bit	31	30	29	28	27	26	25	24
	OUTCLR[31:24]							
Access	RW	RW	RW	RW	RW	RW	RW	RW
Reset	0	0	0	0	0	0	0	0

Bit	23	22	21	20	19	18	17	16
	OUTCLR[23:16]							
Access	RW	RW	RW	RW	RW	RW	RW	RW
Reset	0	0	0	0	0	0	0	0

Bit	15	14	13	12	11	10	9	8
	OUTCLR[15:8]							
Access	RW	RW	RW	RW	RW	RW	RW	RW
Reset	0	0	0	0	0	0	0	0

Bit	7	6	5	4	3	2	1	0
	OUTCLR[7:0]							
Access	RW	RW	RW	RW	RW	RW	RW	RW
Reset	0	0	0	0	0	0	0	0

Bits 31:0 – OUTCLR[31:0] PORT Data Output Value Clear
Writing '0' to a bit has no effect.
Writing '1' to a bit will clear the corresponding bit in the OUT register. Pins configured as outputs via the Data Direction register (DIR) will be set to low output drive level. Pins configured as inputs via DIR and with pull enabled via the Pull Enable bit in the Pin Configuration register (PINCFG.PULLEN) will set the input pull direction to an internal pull-down.

Value	Description
0	The corresponding I/O pin in the PORT group will keep its configuration.
1	The corresponding I/O pin output is driven low, or the input is connected to an internal pull-down.

27.7.7 Data Output Value Set

Name: OUTSET
Offset: 0x18
Reset: 0x00000000
Property: PAC Write-Protection

This register allows the user to set one or more output I/O pin drive levels high, without doing a read-modify-write operation. Changes in this register will also be reflected in the Data Output Value (OUT), Data Output Value Toggle (OUTTGL) and Data Output Value Clear (OUTCLR) registers.

Tip: The I/O pins are assembled in pin groups ("PORT groups") with up to 32 pins. Group 0 consists of the PA pins, group 1 is for the PB pins, etc. Each pin group has its own PORT registers, with a 0x80 address spacing. For example, the register address offset for the Data Direction (DIR) register for group 0 (PA00 to PA31) is 0x00, and the register address offset for the DIR register for group 1 (PB00 to PB31) is 0x80.

Bit	31	30	29	28	27	26	25	24
	OUTSET[31:24]							
Access	RW	RW	RW	RW	RW	RW	RW	RW
Reset	0	0	0	0	0	0	0	0

Bit	23	22	21	20	19	18	17	16
	OUTSET[23:16]							
Access	RW	RW	RW	RW	RW	RW	RW	RW
Reset	0	0	0	0	0	0	0	0

Bit	15	14	13	12	11	10	9	8
	OUTSET[15:8]							
Access	RW	RW	RW	RW	RW	RW	RW	RW
Reset	0	0	0	0	0	0	0	0

Bit	7	6	5	4	3	2	1	0
	OUTSET[7:0]							
Access	RW	RW	RW	RW	RW	RW	RW	RW
Reset	0	0	0	0	0	0	0	0

Bits 31:0 – OUTSET[31:0] PORT Data Output Value Set
Writing '0' to a bit has no effect.
Writing '1' to a bit will set the corresponding bit in the OUT register, which sets the output drive level high for I/O pins configured as outputs via the Data Direction register (DIR). For pins configured as inputs via Data Direction register (DIR) with pull enabled via the Pull Enable register (PULLEN), these bits will set the input pull direction to an internal pull-up.

Value	Description
0	The corresponding I/O pin in the group will keep its configuration.
1	The corresponding I/O pin output is driven high, or the input is connected to an internal pull-up.

27.7.8 Data Output Value Toggle

Name: OUTTGL
Offset: 0x1C
Reset: 0x00000000
Property: PAC Write-Protection

This register allows the user to toggle the drive level of one or more output I/O pins, without doing a read-modify-write operation. Changes in this register will also be reflected in the Data Output Value (OUT), Data Output Value Set (OUTSET) and Data Output Value Clear (OUTCLR) registers.



Tip: The I/O pins are assembled in pin groups ("PORT groups") with up to 32 pins. Group 0 consists of the PA pins, group 1 is for the PB pins, etc. Each pin group has its own PORT registers, with a 0x80 address spacing. For example, the register address offset for the Data Direction (DIR) register for group 0 (PA00 to PA31) is 0x00, and the register address offset for the DIR register for group 1 (PB00 to PB31) is 0x80.

Bit	31	30	29	28	27	26	25	24
	OUTTGL[31:24]							
Access	RW	RW	RW	RW	RW	RW	RW	RW
Reset	0	0	0	0	0	0	0	0

Bit	23	22	21	20	19	18	17	16
	OUTTGL[23:16]							
Access	RW	RW	RW	RW	RW	RW	RW	RW
Reset	0	0	0	0	0	0	0	0

Bit	15	14	13	12	11	10	9	8
	OUTTGL[15:8]							
Access	RW	RW	RW	RW	RW	RW	RW	RW
Reset	0	0	0	0	0	0	0	0

Bit	7	6	5	4	3	2	1	0
	OUTTGL[7:0]							
Access	RW	RW	RW	RW	RW	RW	RW	RW
Reset	0	0	0	0	0	0	0	0

Bits 31:0 – OUTTGL[31:0] PORT Data Output Value Toggle
Writing '0' to a bit has no effect.
Writing '1' to a bit will toggle the corresponding bit in the OUT register, which inverts the output drive level for I/O pins configured as outputs via the Data Direction register (DIR). For pins configured as inputs via Data Direction register (DIR) with pull enabled via the Pull Enable register (PULLEN), these bits will toggle the input pull direction.

Value	Description
0	The corresponding I/O pin in the PORT group will keep its configuration.
1	The corresponding OUT bit value is toggled.

27.7.9 Data Input Value

Name: IN
Offset: 0x20
Reset: 0x00000000
Property: -

Tip: The I/O pins are assembled in pin groups ("PORT groups") with up to 32 pins. Group 0 consists of the PA pins, group 1 is for the PB pins, etc. Each pin group has its own PORT registers, with a 0x80 address spacing. For example, the register address offset for the Data Direction (DIR) register for group 0 (PA00 to PA31) is 0x00, and the register address offset for the DIR register for group 1 (PB00 to PB31) is 0x80.

Bit	31	30	29	28	27	26	25	24
	IN[31:24]							
Access	R	R	R	R	R	R	R	R
Reset	0	0	0	0	0	0	0	0

Bit	23	22	21	20	19	18	17	16
	IN[23:16]							
Access	R	R	R	R	R	R	R	R
Reset	0	0	0	0	0	0	0	0

Bit	15	14	13	12	11	10	9	8
	IN[15:8]							
Access	R	R	R	R	R	R	R	R
Reset	0	0	0	0	0	0	0	0

Bit	7	6	5	4	3	2	1	0
	IN[7:0]							
Access	R	R	R	R	R	R	R	R
Reset	0	0	0	0	0	0	0	0

Bits 31:0 – IN[31:0] PORT Data Input Value
These bits are cleared when the corresponding I/O pin input sampler detects a logical low level on the input pin.
These bits are set when the corresponding I/O pin input sampler detects a logical high level on the input pin.

27.7.10 Control

Name: CTRL
Offset: 0x24
Reset: 0x00000000
Property: PAC Write-Protection

Tip: The I/O pins are assembled in pin groups ("PORT groups") with up to 32 pins. Group 0 consists of the PA pins, group 1 is for the PB pins, etc. Each pin group has its own PORT registers, with a 0x80 address spacing. For example, the register address offset for the Data Direction (DIR) register for group 0 (PA00 to PA31) is 0x00, and the register address offset for the DIR register for group 1 (PB00 to PB31) is 0x80.

Bit	31	30	29	28	27	26	25	24
	SAMPLING[31:24]							
Access	RW	RW	RW	RW	RW	RW	RW	RW
Reset	0	0	0	0	0	0	0	0

Bit	23	22	21	20	19	18	17	16
	SAMPLING[23:16]							
Access	RW	RW	RW	RW	RW	RW	RW	RW
Reset	0	0	0	0	0	0	0	0

Bit	15	14	13	12	11	10	9	8
	SAMPLING[15:8]							
Access	RW	RW	RW	RW	RW	RW	RW	RW
Reset	0	0	0	0	0	0	0	0

Bit	7	6	5	4	3	2	1	0
	SAMPLING[7:0]							
Access	RW	RW	RW	RW	RW	RW	RW	RW
Reset	0	0	0	0	0	0	0	0

Bits 31:0 – SAMPLING[31:0] Input Sampling Mode
Configures the input sampling functionality of the I/O pin input samplers, for pins configured as inputs via the Data Direction register (DIR).
The input samplers are enabled and disabled in sub-groups of eight. Thus if any pins within a byte request continuous sampling, all pins in that eight pin sub-group will be continuously sampled.

Value	Description
0	On demand sampling of I/O pin is enabled.
1	Continuous sampling of I/O pin is enabled.

27.7.11 Write Configuration

Name: WRCONFIG
Offset: 0x28
Reset: 0x00000000
Property: PAC Write-Protection, Write-Only

Tip: The I/O pins are assembled in pin groups ("PORT groups") with up to 32 pins. Group 0 consists of the PA pins, group 1 is for the PB pins, etc. Each pin group has its own PORT registers, with a 0x80 address spacing. For example, the register address offset for the Data Direction (DIR) register for group 0 (PA00 to PA31) is 0x00, and the register address offset for the DIR register for group 1 (PB00 to PB31) is 0x80.

This write-only register is used to configure several pins simultaneously with the same configuration and peripheral multiplexing.

In order to avoid side effect of non-atomic access, 8-bit or 16-bit writes to this register will have no effect. Reading this register always returns zero.

Bit	31	30	29	28	27	26	25	24
	HWSEL	WRPINCFG		WRPMUX	PMUX[3:0]			
Access	W	W		W	W	W	W	W
Reset	0	0		0	0	0	0	0

Bit	23	22	21	20	19	18	17	16
		DRVSTR				PULLEN	INEN	PMUXEN
Access		W				W	W	W
Reset		0				0	0	0

Bit	15	14	13	12	11	10	9	8
	PINMASK[15:8]							
Access	W	W	W	W	W	W	W	W
Reset	0	0	0	0	0	0	0	0

Bit	7	6	5	4	3	2	1	0
	PINMASK[7:0]							
Access	W	W	W	W	W	W	W	W
Reset	0	0	0	0	0	0	0	0

Bit 31 – HWSEL Half-Word Select
This bit selects the half-word field of a 32-PORT group to be reconfigured in the atomic write operation.
This bit will always read as zero.

Value	Description
0	The lower 16 pins of the PORT group will be configured.
1	The upper 16 pins of the PORT group will be configured.

Bit 30 – WRPINCFG Write PINCFG
This bit determines whether the atomic write operation will update the Pin Configuration register (PINCFGy) or not for all pins selected by the WRCONFIG.PINMASK and WRCONFIG.HWSEL bits.
Writing '0' to this bit has no effect.
Writing '1' to this bit updates the configuration of the selected pins with the written WRCONFIG.DRVSTR, WRCONFIG.PULLEN, WRCONFIG.INEN, WRCONFIG.PMUXEN, and WRCONFIG.PINMASK values.
This bit will always read as zero.

Value	Description
0	The PINCFGy registers of the selected pins will not be updated.

Value	Description
1	The PINCFGy registers of the selected pins will be updated.

Bit 28 – WRPMUX Write PMUX
This bit determines whether the atomic write operation will update the Peripheral Multiplexing register (PMUXn) or not for all pins selected by the WRCONFIG.PINMASK and WRCONFIG.HWSEL bits.
Writing '0' to this bit has no effect.
Writing '1' to this bit updates the pin multiplexer configuration of the selected pins with the written WRCONFIG.PMUX value.
This bit will always read as zero.

Value	Description
0	The PMUXn registers of the selected pins will not be updated.
1	The PMUXn registers of the selected pins will be updated.

Bits 27:24 – PMUX[3:0] Peripheral Multiplexing
These bits determine the new value written to the Peripheral Multiplexing register (PMUXn) for all pins selected by the WRCONFIG.PINMASK and WRCONFIG.HWSEL bits, when the WRCONFIG.WRPMUX bit is set.
These bits will always read as zero.

Bit 22 – DRVSTR Output Driver Strength Selection
This bit determines the new value written to PINCFGy.DRVSTR for all pins selected by the WRCONFIG.PINMASK and WRCONFIG.HWSEL bits, when the WRCONFIG.WRPINCFG bit is set.
This bit will always read as zero.

Bit 18 – PULLEN Pull Enable
This bit determines the new value written to PINCFGy.PULLEN for all pins selected by the WRCONFIG.PINMASK and WRCONFIG.HWSEL bits, when the WRCONFIG.WRPINCFG bit is set.
This bit will always read as zero.

Bit 17 – INEN Input Enable
This bit determines the new value written to PINCFGy.INEN for all pins selected by the WRCONFIG.PINMASK and WRCONFIG.HWSEL bits, when the WRCONFIG.WRPINCFG bit is set.
This bit will always read as zero.

Bit 16 – PMUXEN Peripheral Multiplexer Enable
This bit determines the new value written to PINCFGy.PMUXEN for all pins selected by the WRCONFIG.PINMASK and WRCONFIG.HWSEL bits, when the WRCONFIG.WRPINCFG bit is set.
This bit will always read as zero.

Bits 15:0 – PINMASK[15:0] Pin Mask for Multiple Pin Configuration
These bits select the pins to be configured within the half-word group selected by the WRCONFIG.HWSEL bit.
These bits will always read as zero.

Value	Description
0	The configuration of the corresponding I/O pin in the half-word group will be left unchanged.
1	The configuration of the corresponding I/O pin in the half-word PORT group will be updated.

27.7.12 Event Input Control

Name: EVCTRL
Offset: 0x2C
Reset: 0x00000000
Property: PAC Write-Protection

Tip: The I/O pins are assembled in pin groups ("PORT groups") with up to 32 pins. Group 0 consists of the PA pins, group 1 is for the PB pins, etc. Each pin group has its own PORT registers, with a 0x80 address spacing. For example, the register address offset for the Data Direction (DIR) register for group 0 (PA00 to PA31) is 0x00, and the register address offset for the DIR register for group 1 (PB00 to PB31) is 0x80.

There are up to four input event pins for each PORT group. Each byte of this register addresses one Event input pin.

Bit	31	30	29	28	27	26	25	24
	PORTEI3	EVACT3[1:0]		PID3[4:0]				
Access	RW	RW	RW	RW	RW	RW	RW	RW
Reset	0	0	0	0	0	0	0	0

Bit	23	22	21	20	19	18	17	16
	PORTEI2	EVACT2[1:0]		PID2[4:0]				
Access	RW	RW	RW	RW	RW	RW	RW	RW
Reset	0	0	0	0	0	0	0	0

Bit	15	14	13	12	11	10	9	8
	PORTEI1	EVACT1[1:0]		PID1[4:0]				
Access	RW	RW	RW	RW	RW	RW	RW	RW
Reset	0	0	0	0	0	0	0	0

Bit	7	6	5	4	3	2	1	0
	PORTEI0	EVACT0[1:0]		PID0[4:0]				
Access	RW	RW	RW	RW	RW	RW	RW	RW
Reset	0	0	0	0	0	0	0	0

Bits 7, 15, 23, 31 – PORTEIx PORT Event Input Enable x [x = 3..0]

Value	Description
0	The event action x (EVACTx) will not be triggered on any incoming event.
1	The event action x (EVACTx) will be triggered on any incoming event.

Bits 5:6, 13:14, 21:22, 29:30 – EVACTx PORT Event Action x [x = 3..0]
These bits define the event action the PORT will perform on event input x. See also Table 27-4.

Bits 0:4, 8:12, 16:20, 24:28 – PIDx PORT Event Pin Identifier x [x = 3..0]
These bits define the I/O pin on which the event action will be performed, according to Table 27-5.

Table 27-4. PORT Event x Action (x = [3..0])

Value	Name	Description
0x0	OUT	Output register of pin will be set to level of event.
0x1	SET	Set output register of pin on event.
0x2	CLR	Clear output register of pin on event.
0x3	TGL	Toggle output register of pin on event.

Table 27-5. PORT Event x Pin Identifier (x = [3..0])

Value	Name	Description
0x0	PIN0	Event action to be executed on PIN 0.
0x1	PIN1	Event action to be executed on PIN 1.
...	...	...
0x31	PIN31	Event action to be executed on PIN 31.

27.7.13 Peripheral Multiplexing n

Name: PMUX
Offset: 0x30 + n*0x01 [n=0..15]
Reset: 0x00 except group 0 PMUX15 = 0x06
Property: PAC Write-Protection

Tip: The I/O pins are assembled in pin groups (”PORT groups”) with up to 32 pins. Group 0 consists of the PA pins, group 1 is for the PB pins, etc. Each pin group has its own PORT registers, with a 0x80 address spacing. For example, the register address offset for the Data Direction (DIR) register for group 0 (PA00 to PA31) is 0x00, and the register address offset for the DIR register for group 1 (PB00 to PB31) is 0x80.

There are up to 16 Peripheral Multiplexing registers in each group, one for every set of two subsequent I/O lines. The n denotes the number of the set of I/O lines.

Bit	7	6	5	4	3	2	1	0
	PMUXO[3:0]				PMUXE[3:0]			
Access	RW	RW	RW	RW	RW	RW	RW	RW
Reset	0	0	0	0	0	0	0	0

Bits 7:4 – PMUXO[3:0] Peripheral Multiplexing for Odd-Numbered Pin
These bits select the peripheral function for odd-numbered pins (2*n + 1) of a PORT group, if the corresponding PINCFGy.PMUXEN bit is '1'.
Not all possible values for this selection may be valid. For more details, refer to the Pinout.

PMUXO[3:0]	Name	Description
0x0	A	Peripheral function A selected
0x1	B	Peripheral function B selected
0x2	C	Peripheral function C selected
0x3	D	Peripheral function D selected
0x4	E	Peripheral function E selected
0x5	F	Peripheral function F selected
0x6	G	Peripheral function G selected
0x7	H	Peripheral function H selected
0x8	I	Peripheral function I selected
0x9	J	Peripheral function J selected
0xA-0xF	-	Reserved

Bits 3:0 – PMUXE[3:0] Peripheral Multiplexing for Even-Numbered Pin
These bits select the peripheral function for even-numbered pins (2*n) of a PORT group, if the corresponding PINCFGy.PMUXEN bit is '1'.
Not all possible values for this selection may be valid. For more details, refer to the Pinout.

PMUXE[3:0]	Name	Description
0x0	A	Peripheral function A selected
0x1	B	Peripheral function B selected
0x2	C	Peripheral function C selected
0x3	D	Peripheral function D selected
0x4	E	Peripheral function E selected
0x5	F	Peripheral function F selected
0x6	G	Peripheral function G selected
0x7	H	Peripheral function H selected
0x8	I	Peripheral function I selected

.....continued

PMUXE[3:0]	Name	Description
0x9	J	Peripheral function J selected
0xA-0xF	-	Reserved

27.7.14 Pin Configuration

Name: PINCFG
Offset: 0x40 + n*0x01 [n=0..31]
Reset: 0x00
Property: PAC Write-Protection

Tip: The I/O pins are assembled in pin groups ("PORT groups") with up to 32 pins. Group 0 consists of the PA pins, group 1 is for the PB pins, etc. Each pin group has its own PORT registers, with a 0x80 address spacing. For example, the register address offset for the Data Direction (DIR) register for group 0 (PA00 to PA31) is 0x00, and the register address offset for the DIR register for group 1 (PB00 to PB31) is 0x80.

There are up to 32 Pin Configuration registers in each PORT group, one for each I/O line.

Bit	7	6	5	4	3	2	1	0
		DRVSTR				PULLEN	INEN	PMUXEN
Access		RW				RW	RW	RW
Reset		0				0	0	0

Bit 6 – DRVSTR Output Driver Strength Selection
This bit controls the output driver strength of an I/O pin configured as an output.

Value	Description
0	Pin drive strength is set to normal drive strength.
1	Pin drive strength is set to stronger drive strength.

Bit 2 – PULLEN Pull Enable
This bit enables the internal pull-up or pull-down resistor of an I/O pin configured as an input.

Value	Description
0	Internal pull resistor is disabled, and the input is in a high-impedance configuration.
1	Internal pull resistor is enabled, and the input is driven to a defined logic level in the absence of external input.

Bit 1 – INEN Input Buffer Enable
This bit controls the input buffer of an I/O pin configured as either an input or output.
Writing a zero to this bit disables the input buffer completely, preventing read-back of the physical pin state when the pin is configured as either an input or output.

Value	Description
0	Input buffer for the I/O pin is disabled, and the input value will not be sampled.
1	Input buffer for the I/O pin is enabled, and the input value will be sampled when required.

Bit 0 – PMUXEN Peripheral Multiplexer Enable
This bit enables or disables the peripheral multiplexer selection set in the Peripheral Multiplexing register (PMUXn) to enable or disable alternative peripheral control over an I/O pin direction and output drive value.
Writing a zero to this bit allows the PORT to control the pad direction via the Data Direction register (DIR) and output drive value via the Data Output Value register (OUT). The peripheral multiplexer value in PMUXn is ignored. Writing '1' to this bit enables the peripheral selection in PMUXn to control the pad. In this configuration, the physical pin state may still be read from the Data Input Value register (IN) if PINCFGn.INEN is set.

Value	Description
0	The peripheral multiplexer selection is disabled, and the PORT registers control the direction and output drive value.
1	The peripheral multiplexer selection is enabled, and the selected peripheral function controls the direction and output drive value.

28. Event System (EVSYS)

28.1 Overview

The Event System (EVSYS) allows autonomous, low-latency and configurable communication between peripherals.

Several peripherals can be configured to generate and/or respond to signals known as events. The exact condition to generate an event, or the action taken upon receiving an event, is specific to each peripheral. Peripherals that respond to events are called event users. Peripherals that generate events are called event generators. A peripheral can have one or more event generators and can have one or more event users.

Communication is made without CPU intervention and without consuming system resources such as bus or SRAM bandwidth. This reduces the load on the CPU and other system resources, compared to a traditional interrupt-based system.

28.2 Features

- 12 configurable event channels, where each channel can:
  - Be connected to any event generator
  - Provide a pure asynchronous, resynchronized or synchronous path
- 88 event generators
- 47 event users
- Configurable edge detector
- Peripherals can be event generators, event users, or both
- SleepWalking and interrupt for operation in sleep modes
- Software event generation
- Each event user can choose which channel to respond to

28.3 Block Diagram

Figure 28-1. Event System Block Diagram

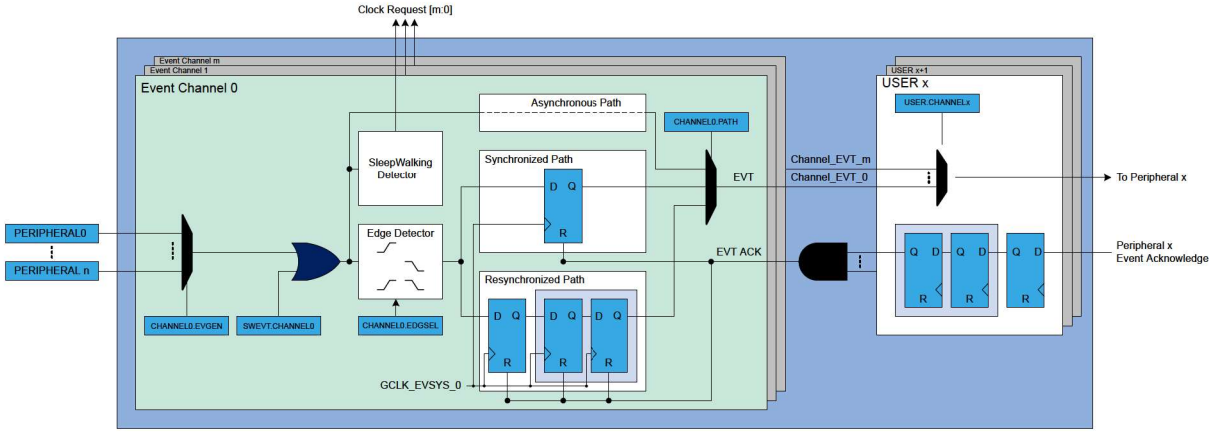

28.4 Peripheral Dependencies

Peripheral	Base Address	IRQ	AHB CLK	APB CLK	Generic CLK	PAC		Events		DMA	Sleep Walking
			Enabled at reset	Enabled at reset	Index	Index	Prot at reset	User	Generator	Index	
EVSYS	0x42000000	8	-	N	6-17: one per channel	0	N	-	-	-	Y

28.5 Functional Description

28.5.1 Principle of Operation

The Event System consists of several channels which route the internal events from peripherals (generators) to other internal peripherals or I/O pins (users). Each event generator can be selected as source for multiple channels, but a channel cannot be set to use multiple event generators at the same time.

A channel path can be configured in asynchronous, synchronous or resynchronized mode of operation. The mode of operation must be selected based on the requirements of the application.

When using synchronous or resynchronized path, the Event System includes options to transfer events to users when rising, falling or both edges are detected on event generators.

For further details, refer to the Channel Path section of this chapter.

28.5.2 Basic Operation

28.5.2.1 Initialization

Before enabling event routing within the system, the Event Users Multiplexer and Event Channels must be selected in the Event System (EVSYS), and the two peripherals that generate and use the event have to be configured. The recommended sequence is:

1. In the peripheral generating the event, enable output of event by writing a '1' to the respective Event Output Enable bit ("EO") in the peripheral's Event Control register (e.g., TCC.EVCTRL.MCEO1, AC.EVCTRL.WINEO0, or RTC.EVCTRL.OVFEO).
2. Configure the EVSYS:
   2.1. Configure the Event User multiplexer by writing the respective EVSYS.USERm register, see also 28.5.2.3 User Multiplexer Setup.
   2.2. Configure the Event Channel by writing the respective EVSYS.CHANNELn register, see also 28.5.2.4 Event System Channel.
3. Configure the action to be executed by the event user peripheral by writing to the Event Action bits (EVACT) in the respective Event control register (e.g., TC.EVCTRL.EVACT, PDEC.EVCTRL.EVACT). Note: not all peripherals require this step.
4. In the event user peripheral, enable event input by writing a '1' to the respective Event Input Enable bit ("EI") in the peripheral's Event Control register (e.g., AC.EVCTRL.IVEI0, ADC.EVCTRL.STARTEI).

28.5.2.2 Enabling, Disabling, and Resetting

The EVSYS is always enabled.

The EVSYS is reset by writing a '1' to the Software Reset bit in the Control A register (CTRLA.SWRST). All registers in the EVSYS will be reset to their initial state and all ongoing events will be canceled.

Refer to CTRLA.SWRST register for details.

28.5.2.3 User Multiplexer Setup

The user multiplexer defines the channel to be connected to which event user. Each user multiplexer is dedicated to one event user. A user multiplexer receives all event channels output and must be configured to select one of these channels, as shown in Block Diagram section. The channel is selected with the Channel bit group in the User register (USERm.CHANNEL).

The user multiplexer must always be configured before the channel. A list of all the user multiplexers is found in the User (USERm) register description.

28.5.2.4 Event System Channel

An event channel can select one event from a list of event generators. Depending on configuration, the selected event could be synchronized, resynchronized or asynchronously sent to users. When synchronization or resynchronization is required, the channel includes an internal edge detector, allowing the Event System to generate internal events when rising, falling or both edges are detected on the selected event generator. After the event channel is configured and enabled, the Channel Busy bit (CHSTATUS.CHBUSYn) will not be set for one generic clock (GCLK_EVSYS_CHANNELn) cycle. Before the first event is exercised, the application must wait one clock cycle for the channel to finalize the configuration when synchronous channels are used.

An event channel is able to generate internal events for specific software commands, see channel Block Diagram.

28.5.2.5 Event Generators

Each event channel can receive the events form all event generators. All event generators are listed in the Event Generator bit field in the Channel n register (CHANNELn.EVGEN). For details on event generation, refer to the corresponding module chapter. The channel event generator is selected by the Event Generator bit group in the Channel register (CHANNELn.EVGEN). By default, the channels are not connected to any event generators (i.e., CHANNELn.EVGEN = 0)

28.5.2.6 Channel Path

The following are different ways to propagate the event from an event generator:

- Asynchronous path
- Synchronous path
- Resynchronized path

The path is decided by writing to the Path Selection bit group of the Channel register (CHANNELn.PATH).

Asynchronous Path

When using the asynchronous path, the events are propagated from the event generator to the event user without intervention from the Event System. The GCLK for this channel (GCLK_EVSYS_CHANNEL_n) is not mandatory, meaning that an event will be propagated to the user without any clock latency.

When the asynchronous path is selected, the channel cannot generate any interrupts, and the Channel Status register (CHSTATUS) is always zero. The edge detection is not required and must be disabled by software. Each peripheral event user must select which event edge must trigger internal actions. For further details, refer to each peripheral chapter description.

Synchronous Path

The synchronous path must be used when the event generator and the event channel share the same generator for the generic clock. If they do not share the same clock, a logic change from the event generator to the event channel might not be detected in the channel, which means that the event will not be propagated to the event user. For details on generic clock generators, refer to GCLK - Generic Clock Controller.

When using the synchronous path, the channel is able to generate interrupts. The channel busy ‘n’ bit in the Channel Status register (CHSTATUS.CHBUSYn) are also updated and available for use. If many events are received by the event system in less than 2.5 GCLK_EVSYS periods, only the first event will be serviced and the overrun flag will not be set.

Resynchronized Path

The resynchronized path are used when the event generator and the event channel do not share the same generator for the generic clock. When the resynchronized path is used, resynchronization of the event from the event generator is done in the channel. For details on generic clock generators, refer to GCLK - Generic Clock Controller.

When the resynchronized path is used, the channel is able to generate interrupts. The channel busy ‘n’ bits in the Channel Status register (CHSTATUS.CHBUSYn) are also updated and available for use. If many events are received by the event system in less than 2.5 GCLK_EVSYS periods, only the first event will be serviced and the overrun flag will not be set. Additionally, the resynchronized channel busy flag (CHSTATUS.CHBUSYn) will not be set for three clock cycles after the event is received.

28.5.2.7 Edge Detection

When synchronous or resynchronized paths are used, edge detection must be enabled. The event system can execute edge detection in three different ways:

- Generate an event only on the rising edge
- Generate an event only on the falling edge
- Generate an event on rising and falling edges.

Edge detection is selected by writing to the Edge Selection bit group of the Channel register (CHANNELn.EDGSEL).

28.5.2.8 Event Latency

The latency from the event generator to the event user depends on the configuration of the channel:

- Asynchronous Path: The maximum routing latency of an external event is related to the internal signal routing and it is device dependent.
- Synchronous Path: The maximum routing latency of an external event is one GCLK_EVSYS_CHANNEL_n clock cycle.
- Resynchronized Path: The maximum routing latency of an external event is three GCLK_EVSYS_CHANNEL_n clock cycles.

The maximum propagation latency of a user event to the peripheral clock core domain is three peripheral clock cycles.

The event generators, event channel and event user clocks ratio must be selected in relation with the internal event latency constraints. Events propagation or event actions in peripherals may be lost if the clock setup violates the internal latencies.

28.5.2.9 The Overrun Channel n Interrupt

The Overrun Channel n interrupt flag in the Interrupt Flag Status and Clear register (INTFLAGn.OVR) will be set, and the optional interrupt will be generated in the following cases:

- Many event users on channel ‘n’ is not ready when there is a new event.
- An event occurs when the previous event on channel ‘m’ is not handled by all event users connected to that channel.

The flag will only be set when using synchronous or resynchronized paths. In the case of asynchronous path, the INTFLAGn.OVR is always read as zero. When using the synchronous path ensure the generic clock (GCLK) is always on by setting the event systems channel to be on demand (CHANNELn.ONDEMAND). Following this configuration will prevent spurious overrun interrupts.

28.5.2.10 The Event Detected Channel n Interrupt

The Event Detected Channel n interrupt flag in the Interrupt Flag Status and Clear register (INTFLAGn.EVD) is set when an event coming from the event generator configured on channel n is detected.

The flag will only be set when using a synchronous or resynchronized path. In the case of asynchronous path, the INTFLAGn.EVD is always zero.

28.5.2.11 Channel Status

The Channel Status register (CHSTATUS) shows the status of the channels when using a synchronous or resynchronized path. There are two different status bits in CHSTATUS for each of the available channels:

- The CHSTATUSn.BUSYCH bit will be set when an event on the corresponding channel n has not been handled by all event users connected to that channel.
- The CHSTATUSn.RDYUSR bit will be set when all event users connected to the corresponding channel are ready to handle incoming events on that channel.

28.5.2.12 Software Event

A software event can be initiated on a channel by setting the Channel ‘n’ bit in the Software Event register (SWEVT.CHANNELn) to ‘1’. Then the software event can be serviced as any event generator; that is, when a bit is set to ‘1’, an event will be generated on the respective channel.

When using a software event on a channel with resynchronized path, the CHSTATUS.CHBUSYn bit will not be set immediately. Wait three GCLK_EVSYS_CHANNEL_n clock cycles for the CHSTATUS.CHBUSYn bit to be set, before issuing a new software event.

28.5.3 Interrupts

The EVSYS has the following interrupt sources:

- Overrun Channel n interrupt (OVRn): for details, refer to 28.5.2.9 The Overrun Channel n Interrupt.
- Event Detected Channel n interrupt (EVDn): for details, refer to 28.5.2.10 The Event Detected Channel n Interrupt.

These interrupts events are asynchronous wake-up sources. Refer to 16.5.3.3 Sleep Mode Controller. Each interrupt source has an interrupt flag which is in the Interrupt Flag Status and Clear (INTFLAG) register. The flag is set when the interrupt is issued. Each interrupt event can be individually enabled by setting a '1' to the corresponding bit in the Interrupt Enable Set (INTENSET) register, and disabled by setting a '1' to the corresponding bit in the Interrupt Enable Clear (INTENCLR) register. An interrupt event is generated when the interrupt flag is set and the corresponding interrupt is enabled. The interrupt event is active until the interrupt flag is cleared, the interrupt is disabled, or the Event System is reset. See 28.6.5 INTFLAG for details on how to clear interrupt flags.

All interrupt events from the peripheral are ORed together on system level to generate one combined interrupt request to the NVIC. Refer to the 9.2 Nested Vector Interrupt Controller for details. The event user must read the INTFLAG register to determine what the interrupt condition is.

Note that interrupts must be globally enabled for interrupt requests to be generated. Refer to Nested Vector Interrupt Controller for details.

28.5.4 Sleep Mode Operation

The EVSYS can generate interrupts to wake up the device from any sleep mode.

To be able to run in standby, the Run in Standby bit in the Channel register (CHANNELn.RUNSTDBY) must be set to '1'. When the Generic Clock On Demand bit in Channel register (CHANNELn.ONDEMAND) is set to '1' and the event generator is detected, the event channel will request its clock (GCLK_EVSYS_CHANNEL_n). The event latency for a resynchronized channel path will increase by two GCLK_EVSYS_CHANNEL_n clock (i.e., up to five GCLK_EVSYS_CHANNEL_n clock cycles).

A channel will behave differently in different sleep modes regarding to CHANNELn.RUNSTDBY and CHANNELn.ONDEMAND, as shown in the table below:

Table 28-1. Event Channel Sleep Behavior

CHANNELn.ONDEMAND	CHANNELn.RUNSTDBY	Sleep Behavior
0	0	Only run in Idle sleep mode if an event must be propagated. Disabled in Standby Sleep mode.
0	1	Always run in Idle and Standby Sleep modes.
1	0	Only run in Idle sleep mode if an event must be propagated. Disabled in Standby Sleep mode. Two GCLK_EVSYS_n latency added in RESYNC path before the event is propagated internally.
1	1	Always run in Idle and Standby Sleep modes. Two GCLK_EVSYS_n latency added in RESYNC path before the event is propagated internally.

28.6 Register Summary

Offset	Name	Bit Pos.	7	6	5	4	3	2	1	0
0x00	CTRLA	7:0								SWRST
0x01 ... 0x0B	Reserved									
0x0C	CHSTATUS	7:0	USRRDY7	USRRDY6	USRRDY5	USRRDY4	USRRDY3	USRRDY2	USRRDY1	USRRDY0
		15:8					USRRDY11	USRRDY10	USRRDY9	USRRDY8
		23:16	CHBUSY7	CHBUSY6	CHBUSY5	CHBUSY4	CHBUSY3	CHBUSY2	CHBUSY1	CHBUSY0
		31:24					CHBUSY11	CHBUSY10	CHBUSY9	CHBUSY8
0x10	INTENCLR	7:0	OVR7	OVR6	OVR5	OVR4	OVR3	OVR2	OVR1	OVR0
		15:8					OVR11	OVR10	OVR9	OVR8
		23:16	EVD7	EVD6	EVD5	EVD4	EVD3	EVD2	EVD1	EVD0
		31:24					EVD11	EVD10	EVD9	EVD8
0x14	INTENSET	7:0	OVR7	OVR6	OVR5	OVR4	OVR3	OVR2	OVR1	OVR0
		15:8					OVR11	OVR10	OVR9	OVR8
		23:16	EVD7	EVD6	EVD5	EVD4	EVD3	EVD2	EVD1	EVD0
		31:24					EVD11	EVD10	EVD9	EVD8
0x18	INTFLAG	7:0	OVR7	OVR6	OVR5	OVR4	OVR3	OVR2	OVR1	OVR0
		15:8					OVR11	OVR10	OVR9	OVR8
		23:16	EVD7	EVD6	EVD5	EVD4	EVD3	EVD2	EVD1	EVD0
		31:24					EVD11	EVD10	EVD9	EVD8
0x1C	SWEVT	7:0	CHANNEL7	CHANNEL6	CHANNEL5	CHANNEL4	CHANNEL3	CHANNEL2	CHANNEL1	CHANNEL0
		15:8					CHANNEL11	CHANNEL10	CHANNEL9	CHANNEL8
		23:16								
		31:24								
0x20	CHANNEL0	7:0	EVGEN[6:0]							
		15:8	ONDEMAND	RUNSTDBY			EDGSEL[1:0]		PATH[1:0]	
		23:16								
		31:24								
...										
0x4C	CHANNEL11	7:0	EVGEN[6:0]							
		15:8	ONDEMAND	RUNSTDBY			EDGSEL[1:0]		PATH[1:0]	
		23:16								
		31:24								
0x50 ... 0x7F	Reserved									
0x80	USER0	7:0	CHANNEL[4:0]							
		15:8								
		23:16								
		31:24								
...										
0x0138	USER46	7:0	CHANNEL[4:0]							
		15:8								
		23:16								
		31:24								

28.6.1 Control A

Name: CTRLA
Offset: 0x00
Reset: 0x00
Property: PAC Write-Protection

Bit	7	6	5	4	3	2	1	0
								SWRST
Access								W
Reset								0

Bit 0 – SWRST Software Reset
Writing '0' to this bit has no effect.
Writing '1' to this bit resets all registers in the EVSYS to their initial state.
Note: Before applying a Software Reset it is recommended to disable the event generators.

28.6.2 Channel Status

Name: CHSTATUS
Offset: 0x0C
Reset: 0x00000000
Property: –

Bit	31	30	29	28	27	26	25	24
					CHBUSY11	CHBUSY10	CHBUSY9	CHBUSY8
Access					R	R	R	R
Reset					0	0	0	0

Bit	23	22	21	20	19	18	17	16
	CHBUSY7	CHBUSY6	CHBUSY5	CHBUSY4	CHBUSY3	CHBUSY2	CHBUSY1	CHBUSY0
Access	R	R	R	R	R	R	R	R
Reset	0	0	0	0	0	0	0	0

Bit	15	14	13	12	11	10	9	8
					USRRDY11	USRRDY10	USRRDY9	USRRDY8
Access					R	R	R	R
Reset					0	0	0	0

Bit	7	6	5	4	3	2	1	0
	USRRDY7	USRRDY6	USRRDY5	USRRDY4	USRRDY3	USRRDY2	USRRDY1	USRRDY0
Access	R	R	R	R	R	R	R	R
Reset	0	0	0	0	0	0	0	0

Bits 16, 17, 18, 19, 20, 21, 22, 23, 24, 25, 26, 27 – CHBUSYx Channel Busy x [x = 11..0]
This bit is cleared when channel x is idle.
This bit is set if an event on channel x has not been handled by all event users connected to channel x.

Bits 0, 1, 2, 3, 4, 5, 6, 7, 8, 9, 10, 11 – USRRDYx User Ready for Channel x [x = 11..0]
This bit is cleared when at least one of the event users connected to the channel is not ready.
This bit is set when all event users connected to channel x are ready to handle incoming events on channel x.

28.6.3 Interrupt Enable Clear

Name: INTENCLR
Offset: 0x10
Reset: 0x00000000
Property: PAC Write-Protection

This register allows the user to disable an interrupt without doing a read-modify-write operation. Changes in this register will also be reflected in the Interrupt Enable Set register (INTENSET).

Bit	31	30	29	28	27	26	25	24
					EVD11	EVD10	EVD9	EVD8
Access					R/W	R/W	R/W	R/W
Reset					0	0	0	0

Bit	23	22	21	20	19	18	17	16
	EVD7	EVD6	EVD5	EVD4	EVD3	EVD2	EVD1	EVD0
Access	R/W	R/W	R/W	R/W	R/W	R/W	R/W	R/W
Reset	0	0	0	0	0	0	0	0

Bit	15	14	13	12	11	10	9	8
					OVR11	OVR10	OVR9	OVR8
Access					R/W	R/W	R/W	R/W
Reset					0	0	0	0

Bit	7	6	5	4	3	2	1	0
	OVR7	OVR6	OVR5	OVR4	OVR3	OVR2	OVR1	OVR0
Access	R/W	R/W	R/W	R/W	R/W	R/W	R/W	R/W
Reset	0	0	0	0	0	0	0	0

Bits 16, 17, 18, 19, 20, 21, 22, 23, 24, 25, 26, 27 – EVDx Event Detected Channel x Interrupt Enable [x = 11..0]
Writing '0' to this bit has no effect.
Writing '1' to this bit will clear the Event Detected Channel x Interrupt Enable bit, which disables the Event Detected Channel x interrupt.

Value	Description
0	The Event Detected Channel x interrupt is disabled.
1	The Event Detected Channel x interrupt is enabled.

Bits 0, 1, 2, 3, 4, 5, 6, 7, 8, 9, 10, 11 – OVRx Overrun Channel x Interrupt Enable[x = 11..0]
Writing '0' to this bit has no effect.
Writing '1' to this bit will clear the Overrun Channel x Interrupt Enable bit, which disables the Overrun Channel x interrupt.

Value	Description
0	The Overrun Channel x interrupt is disabled.
1	The Overrun Channel x interrupt is enabled.

28.6.4 Interrupt Enable Set

Name: INTENSET
Offset: 0x14
Reset: 0x00000000
Property: PAC Write-Protection

This register allows the user to enable an interrupt without doing a read-modify-write operation. Changes in this register will also be reflected in the Interrupt Enable Clear register (INTENCLR).

Bit	31	30	29	28	27	26	25	24
					EVD11	EVD10	EVD9	EVD8
Access					R/W	R/W	R/W	R/W
Reset					0	0	0	0

Bit	23	22	21	20	19	18	17	16
	EVD7	EVD6	EVD5	EVD4	EVD3	EVD2	EVD1	EVD0
Access	R/W	R/W	R/W	R/W	R/W	R/W	R/W	R/W
Reset	0	0	0	0	0	0	0	0

Bit	15	14	13	12	11	10	9	8
					OVR11	OVR10	OVR9	OVR8
Access					R/W	R/W	R/W	R/W
Reset					0	0	0	0

Bit	7	6	5	4	3	2	1	0
	OVR7	OVR6	OVR5	OVR4	OVR3	OVR2	OVR1	OVR0
Access	R/W	R/W	R/W	R/W	R/W	R/W	R/W	R/W
Reset	0	0	0	0	0	0	0	0

Bits 16, 17, 18, 19, 20, 21, 22, 23, 24, 25, 26, 27 – EVDx Event Detected Channel x Interrupt Enable [x = 11..0]
Writing '0' to this bit has no effect.
Writing '1' to this bit will set the Event Detected Channel x Interrupt Enable bit, which enables the Event Detected Channel x interrupt.

Value	Description
0	The Event Detected Channel x interrupt is disabled.
1	The Event Detected Channel x interrupt is enabled.

Bits 0, 1, 2, 3, 4, 5, 6, 7, 8, 9, 10, 11 – OVRx Overrun Channel x Interrupt Enable [x = 11..0]
Writing '0' to this bit has no effect.
Writing '1' to this bit will set the Overrun Channel x Interrupt Enable bit, which disables the Overrun Channel x interrupt.

Value	Description
0	The Overrun Channel x interrupt is disabled.
1	The Overrun Channel x interrupt is enabled.

28.6.5 Interrupt Flag Status and Clear

Name: INTFLAG
Offset: 0x18
Reset: 0x00000000
Property: –

Bit	31	30	29	28	27	26	25	24
					EVD11	EVD10	EVD9	EVD8
Access					R/W	R/W	R/W	R/W
Reset					0	0	0	0

Bit	23	22	21	20	19	18	17	16
	EVD7	EVD6	EVD5	EVD4	EVD3	EVD2	EVD1	EVD0
Access	R/W	R/W	R/W	R/W	R/W	R/W	R/W	R/W
Reset	0	0	0	0	0	0	0	0

Bit	15	14	13	12	11	10	9	8
					OVR11	OVR10	OVR9	OVR8
Access					R/W	R/W	R/W	R/W
Reset					0	0	0	0

Bit	7	6	5	4	3	2	1	0
	OVR7	OVR6	OVR5	OVR4	OVR3	OVR2	OVR1	OVR0
Access	R/W	R/W	R/W	R/W	R/W	R/W	R/W	R/W
Reset	0	0	0	0	0	0	0	0

Bits 16, 17, 18, 19, 20, 21, 22, 23, 24, 25, 26, 27 – EVDx Event Detected Channel x [x = 11..0]
This flag is set on the next CLK_EVSYS_APB cycle when an event is being propagated through the channel, and an interrupt request will be generated if INTENCLR/SET.EVDx is '1'.
When the event channel path is asynchronous, the EVDx interrupt flag will not be set.
Writing '0' to this bit has no effect.
Writing '1' to this bit will clear the Event Detected Channel x interrupt flag.

Bits 0, 1, 2, 3, 4, 5, 6, 7, 8, 9, 10, 11 – OVRx Overrun Channel x [x = 11..0]
This flag is set on the next CLK_EVSYS_APB cycle after an overrun channel condition occurs, and an interrupt request will be generated if INTENCLR/SET.OVRx is '1'.
There are two possible overrun channel conditions:

- One or more of the event users on channel x are not ready when a new event occurs.
- An event happens when the previous event on channel x has not yet been handled by all event users.

When the event channel path is asynchronous, the OVRx interrupt flag will not be set.
Writing '0' to this bit has no effect.
Writing '1' to this bit will clear the Overrun Detected Channel x interrupt flag.

28.6.6 Software Event

Name: SWEVT
Offset: 0x1C
Reset: 0x00000000
Property: PAC Write-Protection

Bit	31	30	29	28	27	26	25	24
Access								
Reset								

Bit	23	22	21	20	19	18	17	16
Access								
Reset								

Bit	15	14	13	12	11	10	9	8
					CHANNEL11	CHANNEL10	CHANNEL9	CHANNEL8
Access					R/W	R/W	R/W	R/W
Reset					0	0	0	0

Bit	7	6	5	4	3	2	1	0
	CHANNEL7	CHANNEL6	CHANNEL5	CHANNEL4	CHANNEL3	CHANNEL2	CHANNEL1	CHANNEL0
Access	R/W	R/W	R/W	R/W	R/W	R/W	R/W	R/W
Reset	0	0	0	0	0	0	0	0

Bits 0, 1, 2, 3, 4, 5, 6, 7, 8, 9, 10, 11 – CHANNELx Channel x Software [x = 11..0] Selection
Writing '0' to this bit has no effect.
Writing '1' to this bit will trigger a software event for the channel x.
These bits will always return zero when read.

28.6.7 Channel n Control

Name: CHANNELn
Offset: 0x20 + n*0x04 [n=0..11]
Reset: 0x00008000
Property: PAC Write-Protection

This register allows the user to configure channel n. To write to this register, do a single, 32-bit write of all the configuration data.

Bit	31	30	29	28	27	26	25	24
Access								
Reset								

Bit	23	22	21	20	19	18	17	16
Access								
Reset								

Bit	15	14	13	12	11	10	9	8
	ONDEMAND	RUNSTDBY			EDGSEL[1:0]		PATH[1:0]	
Access	R/W	R/W			R/W	R/W	R/W	R/W
Reset	1	0			0	0	0	0

Bit	7	6	5	4	3	2	1	0
		EVGEN[6:0]						
Access		R/W	R/W	R/W	R/W	R/W	R/W	R/W
Reset		0	0	0	0	0	0	0

Bit 15 – ONDEMAND Generic Clock On Demand

Value	Description
0	Generic clock for a channel is always on, if the channel is configured and generic clock source is enabled.
1	Generic clock is requested on demand while an event is handled

Bit 14 – RUNSTDBY Run in Standby
This bit is used to define the behavior during standby sleep mode.

Value	Description
0	The channel is disabled in standby sleep mode.
1	The channel is not stopped in standby sleep mode and depends on the CHANNEL.ONDEMAND

Bits 11:10 – EDGSEL[1:0] Edge Detection Selection
These bits set the type of edge detection to be used on the channel.
These bits must be written to zero when using the asynchronous path.

Value	Name	Description
0x0	NO_EVT_OUTPUT	No event output when using the resynchronized or synchronous path
0x1	RISING_EDGE	Event detection only on the rising edge of the signal from the event generator
0x2	FALLING_EDGE	Event detection only on the falling edge of the signal from the event generator
0x3	BOTH_EDGES	Event detection on rising and falling edges of the signal from the event generator

Bits 9:8 – PATH[1:0] Path Selection
These bits are used to choose which path will be used by the selected channel.
The path choice can be limited by the channel source, see the table in USERm.

Value	Name	Description
0x0	SYNCHRONOUS	Synchronous path
0x1	RESYNCHRONIZED	Resynchronized path

Value	Name	Description
0x2	ASYNCHRONOUS	Asynchronous path
0x3	-	Reserved

Bits 6:0 – EVGEN[6:0] Event Generator
These bits are used to choose the event generator to connect to the selected channel.

Table 28-2. Event Generators

Value	Event Generator	Description
0x00	NONE	No event generator selected
0x01	OSCCTRL FAIL	XOSC Clock Failure
0x02	OSC32KCTRL FAIL	XOSC32K Clock Failure
0x03	RTC CMP0	Compare 0 (mode 0 and 1) or Alarm0 (mode 2)
0x04	RTC CMP1	Compare 1
0x05	RTC OVF	Overflow
0x06	RTC PER0	Period 0
0x07	RTC PER1	Period 1
0x08	RTC PER2	Period 2
0x09	RTC PER3	Period 3
0x0A	RTC PER4	Period 4
0x0B	RTC PER5	Period 5
0x0C	RTC PER6	Period 6
0x0D	RTC PER7	Period 7
0x0E	EIC EXTINT0	External Interrupt 0
0x0F	EIC EXTINT1	External Interrupt 1
0x10	EIC EXTINT2	External Interrupt 2
0x11	EIC EXTINT3	External Interrupt 3
0x12	EIC EXTINT4	External Interrupt 4
0x13	EIC EXTINT5	External Interrupt 5
0x14	EIC EXTINT6	External Interrupt 6
0x15	EIC EXTINT7	External Interrupt 7
0x16	EIC EXTINT8	External Interrupt 8
0x17	EIC EXTINT9	External Interrupt 9
0x18	EIC EXTINT10	External Interrupt 10
0x19	EIC EXTINT11	External Interrupt 11
0x1A	EIC EXTINT12	External Interrupt 12
0x1B	EIC EXTINT13	External Interrupt 13
0x1C	EIC EXTINT14	External Interrupt 14
0x1D	EIC EXTINT15	External Interrupt 15
0x1E	TSENS	Window Monitor
0x1F	DMAC CH0	Channel 0
0x20	DMAC CH1	Channel 1
0x21	DMAC CH2	Channel 2
0x22	DMAC CH3	Channel 3
0x23	TCC0 OVF	Overflow
0x24	TCC0 TRG	Trig
0x25	TCC0 CNT	Counter
0x26	TCC0 MC0	Match/Capture 1
0x27	TCC0 MC1	Match/Capture 1
0x28	TCC0 MC2	Match/Capture 2
0x29	TCC0 MC3	Match/Capture 3
0x2A	TCC1 OVF	Overflow
0x2B	TCC1 TRG	Trig
0x2C	TCC1 CNT	Counter
0x2D	TCC1 MC0	Match/Capture 0
0x2E	TCC1 MC1	Match/Capture 1

.....continued

Value	Event Generator	Description
0x2F	TCC2 OVF	Overflow
0x30	TCC2 TRG	Trig
0x31	TCC2 CNT	Counter
0x32	TCC2 MC0	Match/Capture 0
0x33	TCC2 MC1	Match/Capture 1
0x34	TC0 OVF	Overflow/Underflow
0x35	TC0 MC0	Match/Capture 0
0x36	TC0 MC1	Match/Capture 1
0x37	TC1 OVF	Overflow/Underflow
0x38	TC1 MC0	Match/Capture 0
0x39	TC1 MC1	Match/Capture 1
0x3A	TC2 OVF	Overflow/Underflow
0x3B	TC2 MC1	Match/Capture 0
0x3C	TC2 MC0	Match/Capture 1
0x3D	TC3 OVF	Overflow/Underflow
0x3E	TC3 MC0	Match/Capture 0
0x3F	TC3 MC1	Match/Capture 1
0x40	TC4 OVF	Overflow/Underflow
0x41	TC4 MC0	Match/Capture 0
0x42	TC4 MC1	Match/Capture 1
0x43	ADC0 RESRDY	Result Ready
0x44	ADC0 WINMON	Window Monitor
0x45	ADC1 RESRDY	Result Ready
0x46	ADC1 WINMON	Window Monitor
0x47	SDADC RESRDY	Result Ready
0x48	SDADC WINMON	Window Monitor
0x49	AC COMP0	Comparator 0
0x4A	AC COMP1	Comparator 1
0x4B	AC WIN0	Window 0
0x4C	DAC EMPTY	Data Buffer Empty
0x4D	CCL LUTOUT0	CCL output
0x4E	CCL LUTOUT1	CCL output
0x4F	CCL LUTOUT2	CCL output
0x50	CCL LUTOUT3	CCL output
0x51	PAC ACCERR	Access Error
0x52	-	Reserved
0x53	PDEC_OVF	PDEC Overflow
0x54	PDEC_ERR	PDEC Error
0x55	PDEC_DIR	PDEC Direction
0x56	PDEC_VLC	PDEC VLC
0x57	PDEC_MC0	PDEC MC0
0x58	PDEC_MC1	PDEC MC1
0x59-0x7F	Reserved	Reserved

28.6.8 Event User m

Name: USERm
Offset: 0x80 + m*0x04 [m=0..46]
Reset: 0x00000000
Property: PAC Write-Protection

Bit	31	30	29	28	27	26	25	24
Access								
Reset								

Bit	23	22	21	20	19	18	17	16
Access								
Reset								

Bit	15	14	13	12	11	10	9	8
Access								
Reset								

Bit	7	6	5	4	3	2	1	0
				CHANNEL[4:0]				
Access				R/W	R/W	R/W	R/W	R/W
Reset				0	0	0	0	0

Bits 4:0 – CHANNEL[4:0] Channel Event Selection
These bits are used to select the channel to connect to the event user.
Note that to select channel m, the value (m+1) must be written to the USER.CHANNEL bit group.

Value	Channel Number
0x0	No channel output selected
0x1	0
0x2	1
0x3	2
0x4	3
0x5	4
0x6	5
0x7	6
0x8	7
0x9	8
0xA	9
0xB	10
0xC	11
0xD-0x1F	Reserved

Table 28-3. User Multiplexer Number

USERm	User Multiplexer	Description	Path Type
m = 0	TSENS	Start	Asynchronous path only
m = 1	PORT EV0	Event 0	Asynchronous path only
m = 2	PORT EV1	Event 1	Asynchronous path only
m = 3	PORT EV2	Event 2	Asynchronous path only
m = 4	PORT EV3	Event 3	Asynchronous path only
m = 5	DMAC CH0	Channel 0	Asynchronous, synchronous, and resynchronized paths

.....continued

USERm	User Multiplexer	Description	Path Type
m = 6	DMAC CH1	Channel 1	Asynchronous, synchronous, and resynchronized paths
m = 7	DMAC CH2	Channel 2	Asynchronous, synchronous, and resynchronized paths
m = 8	DMAC CH3	Channel 3	Asynchronous, synchronous, and resynchronized paths
m = 9	TCC0 EV0	Input Event 0	Asynchronous path only
m = 10	TCC0 EV1	Input Event 1	Asynchronous path only
m = 11	TCC0 MC0	Match/Capture 0	Asynchronous path only
m = 12	TCC0 MC1	Match/Capture 1	Asynchronous path only
m = 13	TCC0 MC2	Match/Capture 2	Asynchronous path only
m = 14	TCC0 MC3	Match/Capture 3	Asynchronous path only
m = 15	TCC1 EV0	Input Event 0	Asynchronous path only
m = 16	TCC1 EV1	Input Event 1	Asynchronous path only
m = 17	TCC1 MC0	Match/Capture 0	Asynchronous path only
m = 18	TCC1 MC1	Match/Capture 1	Asynchronous path only
m = 19	TCC2 EV0	Input Event 0	Asynchronous path only
m = 20	TCC2 EV1	Input Event 1	Asynchronous path only
m = 21	TCC2 MC0	Match/Capture 0	Asynchronous path only
m = 22	TCC2 MC1	Match/Capture 1	Asynchronous path only
m = 23	TC0EV	Input Event	Asynchronous path only, synchronous, and resynchronized paths
m = 24	TC1EV	Input Event	Asynchronous, synchronous, and resynchronized paths
m = 25	TC2EV	Input Event	Asynchronous, synchronous, and resynchronized paths
m = 26	TC3EV	Input Event	Asynchronous, synchronous, and resynchronized paths
m = 27	TC4EV	Input Event	Asynchronous, synchronous, and resynchronized paths
m = 28	ADC0 START	ADC start conversion	Asynchronous path only
m = 29	ADC0 FLUSH	Flush ADC	Asynchronous path only
m = 30	ADC1 START	ADC start conversion	Asynchronous path only
m = 31	ADC1 FLUSH	Flush ADC	Asynchronous path only
m = 32	SDADC START	ADC start	Asynchronous path only
m = 33	SDADC FLUSH	Flush ADC	Asynchronous path only
m = 34	AC COMP0	Start comparator 0	Asynchronous path only
m = 35	AC COMP1	Start comparator 1	Asynchronous path only
m = 36	DAC START	DAC start conversion	Asynchronous path only
m = 37	CCL LUTIN 0	CCL input	Asynchronous path only
m = 38	CCL LUTIN 1	CCL input	Asynchronous path only
m = 39	CCL LUTIN 2	CCL input	Asynchronous path only
m = 40	CCL LUTIN 3	CCL input	Asynchronous path only
m = 41	Reserved	-	Reserved
m = 42	MTB START	Micro Trace Buffer Start	Asynchronous path only
m = 43	MTB STOP	Micro Trace Buffer Stop	Asynchronous path only
m = 44	PDEC EVU0	QDEC_EV0	Asynchronous path only
m = 45	PDEC EVU1	QDEC_EV1	Asynchronous path only
m = 46	PDEC EVU2	QDEC_EV2	Asynchronous path only

29. Serial Communication Interface (SERCOM)

29.1 Overview

There are up to four instances of the serial communication interface (SERCOM) peripheral.

A SERCOM can be configured to support a number of modes: I^2C, SPI, and USART. When an instance of SERCOM is configured and enabled, all of the resources of that SERCOM instance will be dedicated to the selected mode.

The SERCOM serial engine consists of a transmitter and receiver, baud-rate generator and address matching functionality. It can use the internal generic clock or an external clock. Using an external clock allows the SERCOM to be operated in all Sleep modes.

29.2 Features

- Interface for configuring into one of the following:
  - Inter-Integrated Circuit (I^2C) Two-wire Serial Interface
  - System Management Bus (SMBus™) compatible
  - Serial Peripheral Interface (SPI)
  - Universal Synchronous/Asynchronous Receiver/Transmitter (USART)
- Single transmit buffer and double receive buffer
- Baud-rate generator
- Address match/mask logic
- Operational in all Sleep modes with an external clock source
- Can be used with DMA

For further information, see the following chapters:

- SERCOM SPI
- SERCOM USART
- SERCOM I^2C

29.3 Block Diagram

Figure 29-1. SERCOM Block Diagram

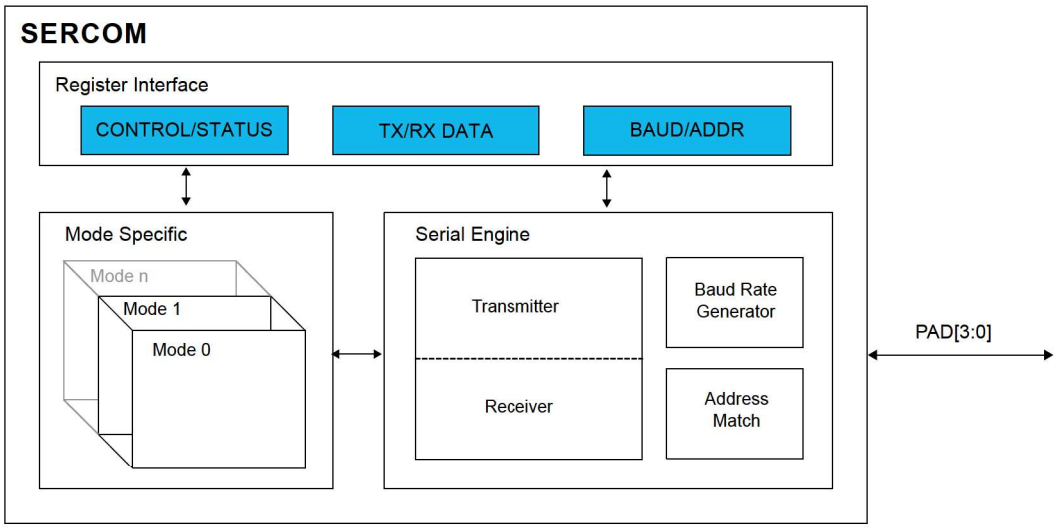

29.4 Signal Description

See the respective SERCOM mode chapters for details.

For further information, see the following chapters:

- SERCOM SPI
- SERCOM USART
- SERCOM I^2C

29.5 Peripheral Dependencies

Peripheral	Base Address	IRQ	AHB CLK	APB CLK	Generic CLK	PAC		Events		DMA	Sleep Walking
			Enabled at reset	Enabled at reset	Index	Index	Prot at reset	User	Generator	Index	
SERCOM0	0x42000400	9	-	N	19: CORE 18: SLOW	1	N	-	-	2: RX 3: TX	Y
SERCOM1	0x42000800	10	-	N	20: CORE 18: SLOW	2	N	-	-	4: RX 5: TX	Y
SERCOM2	0x42000C00	11	-	N	21: CORE 18: SLOW	3	N	-	-	6: RX 7: TX	Y
SERCOM3	0x42001000	12	-	N	22: CORE 18: SLOW	4	N	-	-	8:RX 9:TX	Y

29.6 Functional Description

29.6.1 Principle of Operation

The basic structure of the SERCOM serial engine is shown in Figure 29-2. Labels in capital letters are synchronous to the system clock and accessible by the CPU; labels in lowercase letters can be configured to run on the GCLK_SERCOMx_CORE clock or an external clock.

Figure 29-2. SERCOM Serial Engine

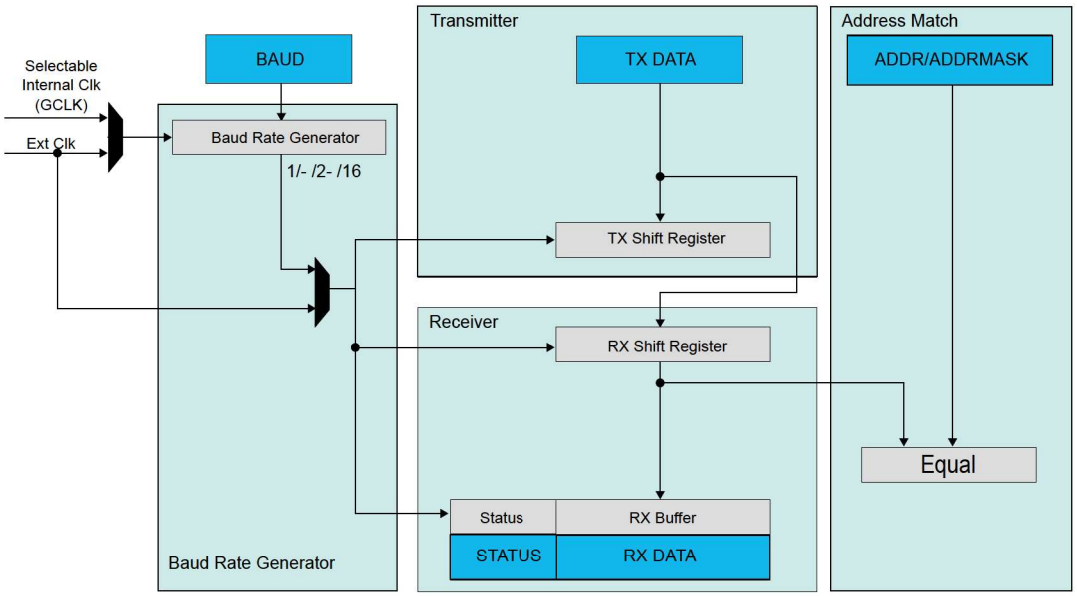

The transmitter consists of a single write buffer and a shift register.

The receiver consists of a one-level (I^2C), two-level (USART, SPI) receive buffer and a shift register.

The baud-rate generator is capable of running on the GCLK_SERCOMx_CORE clock or an external clock.

Address matching logic is included for SPI and I^2C operation.

For further information, see the following chapters:

- SERCOM SPI
- SERCOM USART
- SERCOM I^2C

29.6.2 Basic Operation

29.6.2.1 Initialization

The SERCOM must be configured to the desired mode by writing the Operating Mode bits in the Control A register (CTRLA.MODE). Refer to table SERCOM Modes for details.

Table 29-1. SERCOM Modes

CTRLA.MODE	Description
0x0	USART with external clock
0x1	USART with internal clock
0x2	SPI in slave operation
0x3	SPI in master operation
0x4	I^2C slave operation
0x5	I^2C master operation
0x6-0x7	Reserved

For further initialization information, see the respective SERCOM mode chapters:

- SERCOM SPI
- SERCOM USART

- SERCOM I^2C

29.6.2.2 Enabling, Disabling, and Resetting

This peripheral is enabled by writing '1' to the Enable bit in the Control A register (CTRLA.ENABLE), and disabled by writing '0' to it.

Writing '1' to the Software Reset bit in the Control A register (CTRLA.SWRST) will reset all registers of this peripheral to their initial states, except the DBGCTRL register, only when CRTLA.ENABLE is '1'.

Refer to the CTRLA register description for details.

29.6.2.3 Clock Generation – Baud-Rate Generator

The baud-rate generator, as shown in Figure 29-3, generates internal clocks for asynchronous and synchronous communication. The output frequency (f_{BAUD}) is determined by the Baud register (BAUD) setting and the baud reference frequency (f_{ref}). The baud reference clock is the serial engine clock, and it can be internal or external.

For asynchronous communication, the /16 (divide-by-16) output is used when transmitting, whereas the /1 (divide-by-1) output is used while receiving.

For synchronous communication, the /2 (divide-by-2) output is used.

This functionality is automatically configured, depending on the selected operating mode.

Figure 29-3. Baud Rate Generator

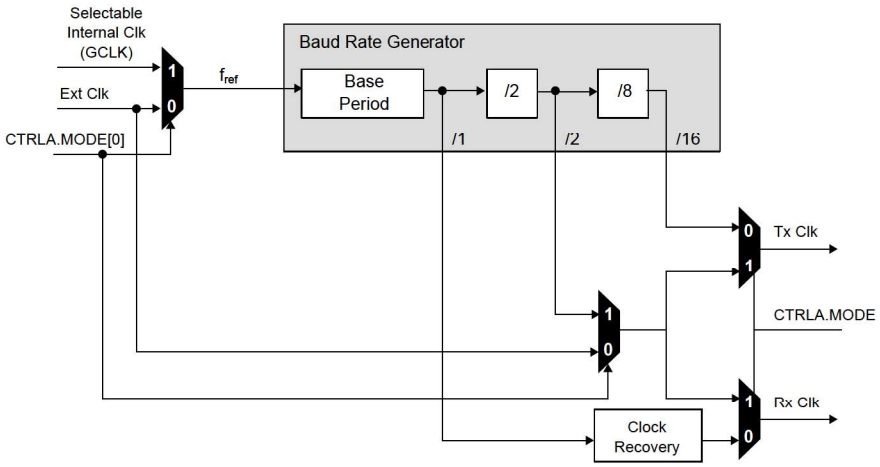

Table 29-2 contains equations for the baud rate (in bits per second) and the BAUD register value for each operating mode.

For asynchronous operation, the BAUD register value is 16 bits (0 to 65,535).

For synchronous operation, the BAUD register value is 8 bits (0 to 255).

Table 29-2. Baud Rate Equations

Operating Mode	Condition	Baud Rate (Bits Per Second)	BAUD Register Value Calculation
Asynchronous Arithmetic	$f_{BAUD} \leq \frac{fref}{16}$	$f_{BAUD} = \frac{f_{ref}}{16}\left(1 - \frac{BAUD}{65536}\right)$	$BAUD = 65536 \cdot \left(1 - 16 \cdot \frac{f_{BAUD}}{f_{ref}}\right)$
Asynchronous Fractional	$f_{BAUD} \leq \frac{fref}{S}$	$f_{BAUD} = \frac{f_{ref}}{S \cdot \left(BAUD + \frac{FP}{8}\right)}$	$BAUD = \frac{f_{ref}}{S \cdot f_{BAUD}} - \frac{FP}{8}$
Synchronous	$f_{BAUD} \leq \frac{fref}{2}$	$f_{BAUD} = \frac{f_{ref}}{2 \cdot (BAUD + 1)}$	$BAUD = \frac{f_{ref}}{2 \cdot f_{BAUD}} - 1$

S - Number of samples per bit, which can be 16, 8, or 3.

The Asynchronous Fractional option is used for auto-baud detection.

The baud rate error is represented by the following formula:

$$\text{Error} = 1 - \left(\frac{\text{ExpectedBaudRate}}{\text{ActualBaudRate}}\right)$$

29.6.2.3.1 Asynchronous Arithmetic Mode BAUD Value Selection

The formula given for f_{BAUD} calculates the average frequency over 65536 f_{ref} cycles. Although the BAUD register can be set to any value between 0 and 65536, the actual average frequency of f_{BAUD} over a single frame is more granular. The BAUD register values that will affect the average frequency over a single frame lead to an integer increase in the cycles per frame (CPF)

$$CPF = \frac{f_{ref}}{f_{BAUD}}(D + S)$$

where

- *D* represent the data bits per frame
- *S* represent the sum of start and first stop bits, if present.

Table 29-3 shows the BAUD register value versus baud frequency f_{BAUD} at a serial engine frequency of 48MHz. This assumes a *D* value of 8 bits and an *S* value of 2 bits (10 bits, including start and stop bits).

Table 29-3. BAUD Register Value vs. Baud Frequency

BAUD Register Value	Serial Engine CPF	f_{BAUD} at 48MHz Serial Engine Frequency (f_{REF})
0 – 406	160	3MHz
407 – 808	161	2.981MHz
809 – 1205	162	2.963MHz
...	...	...
65206	31775	15.11kHz
65207	31871	15.06kHz
65208	31969	15.01kHz

29.6.3 Additional Features

29.6.3.1 Address Match and Mask

The SERCOM address match and mask feature is capable of matching either one address, two unique addresses, or a range of addresses with a mask, based on the mode selected. The match uses seven or eight bits, depending on the mode.

29.6.3.1.1 Address With Mask

An address written to the Address bits in the Address register (ADDR.ADDR), and a mask written to the Address Mask bits in the Address register (ADDR.ADDRMASK) will yield an address match. All bits that are masked are not included in the match. Note that writing the ADDR.ADDRMASK to 'all zeros' will match a single unique address, while writing ADDR.ADDRMASK to 'all ones' will result in all addresses being accepted.

Figure 29-4. Address With Mask

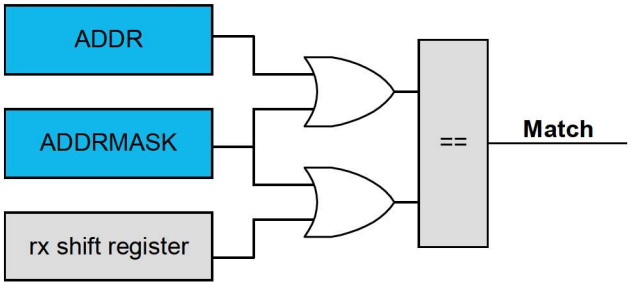

29.6.3.1.2 Two Unique Addresses

The two addresses written to ADDR and ADDRMASK will cause a match.

Figure 29-5. Two Unique Addresses

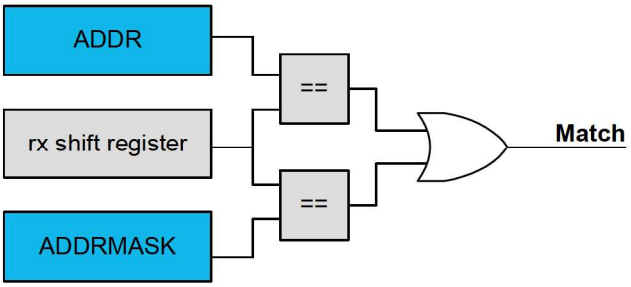

29.6.3.1.3 Address Range

The range of addresses between and including ADDR.ADDR and ADDR.ADDRMASK will cause a match. ADDR.ADDR and ADDR.ADDRMASK can be set to any two addresses, with ADDR.ADDR acting as the upper limit and ADDR.ADDRMASK acting as the lower limit.

Figure 29-6. Address Range



29.6.4 DMA Operation

The available DMA interrupts and their function depend on the operation mode of the SERCOM peripheral. Refer to the Functional Description sections of the respective SERCOM mode.

For further information, see the following chapters:

- SERCOM SPI
- SERCOM USART
- SERCOM I^2C

29.6.5 Interrupts

Interrupt sources are mode-specific. See the respective SERCOM mode chapters for details.

- SERCOM SPI
- SERCOM USART
- SERCOM I^2C

Each interrupt source has its own interrupt flag.

The interrupt flag in the Interrupt Flag Status and Clear register (INTFLAG) will be set when the interrupt condition is met.

Each interrupt can be individually enabled by writing '1' to the corresponding bit in the Interrupt Enable Set register (INTENSET), and disabled by writing '1' to the corresponding bit in the Interrupt Enable Clear register (INTENCLR). As both INTENSET and INTENCLR always reflect the same value, the status of interrupt enablement can be read from either register.

An interrupt request is generated when the interrupt flag is set and the corresponding interrupt is enabled. The interrupt request remains active until either the interrupt flag is cleared, the interrupt is disabled, or the SERCOM is reset. For details on clearing interrupt flags, refer to the INTFLAG register description.

The value of INTFLAG indicates which interrupt condition occurred. The user must read the INTFLAG register to determine which interrupt condition is present.

Note: Interrupts must be globally enabled for interrupt requests.

For further information on Interrupts, refer to the NVIC.

29.6.6 Sleep Mode Operation

The peripheral can operate in any sleep mode where the selected serial clock is running. This clock can be external or generated by the internal baud-rate generator.

The SERCOM interrupts can be used to wake up the device from sleep modes. Refer to the different SERCOM mode chapters for details.

- SERCOM SPI
- SERCOM USART
- SERCOM I^2C

29.6.7 Synchronization

Due to asynchronicity between the main clock domain and the peripheral clock domains, some registers need to be synchronized when written or read.

Required write-synchronization is denoted by the "Write-Synchronized" property in the register description.

Required read-synchronization is denoted by the "Read-Synchronized" property in the register description.

30. SERCOM Synchronous and Asynchronous Receiver and Transmitter (SERCOM USART)

30.1 Overview

The Universal Synchronous and Asynchronous Receiver and Transmitter (USART) is one of the available modes in the 29. Serial Communication Interface (SERCOM).

The USART uses the SERCOM transmitter and receiver, see 30.3 Block Diagram. Labels in uppercase letters are synchronous to CLK_SERCOMx_APB and accessible for CPU. Labels in lowercase letters can be programmed to run on the internal generic clock or an external clock.

The transmitter consists of a single write buffer, a shift register, and control logic for different frame formats. The write buffer support data transmission without any delay between frames. The receiver consists of a two-level receive buffer and a shift register. Status information of the received data is available for error checking. Data and clock recovery units ensure robust synchronization and noise filtering during asynchronous data reception.

30.2 USART Features

- Full-duplex operation
- Asynchronous (with clock reconstruction) or synchronous operation
- Internal or external clock source for asynchronous and synchronous operation
- Baud-rate generator
- Supports serial frames with 5, 6, 7, 8 or 9 data bits and 1 or 2 stop bits
- Odd or even parity generation and parity check
- Selectable LSB or MSB first data transfer
- Buffer overflow and frame error detection
- Noise filtering, including false start-bit detection and digital low-pass filter
- Collision detection
- Can operate in all sleep modes
- Operation at speeds up to half the system clock for internally generated clocks
- Operation at speeds up to the system clock for externally generated clocks
- RTS and CTS flow control
- IrDA modulation and demodulation up to 115.2 kbps
- LIN master support
- LIN slave support
  - Auto-baud and break character detection
- RS485 Support
- Start-of-frame detection
- Can work with DMA

30.3 Block Diagram

Figure 30-1. USART Block Diagram

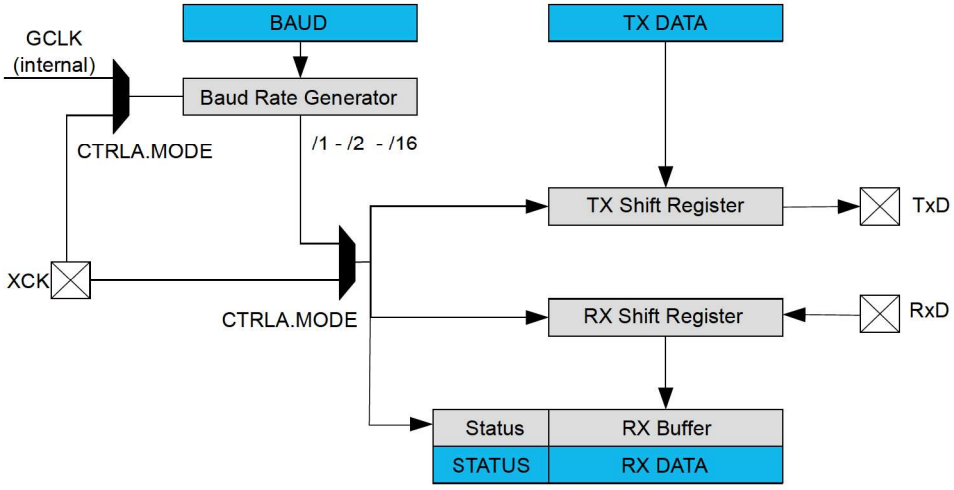

30.4 Signal Description

Table 30-1. SERCOM USART Signals

Signal Name	Type	Description
PAD[3:0]	Digital I/O	General SERCOM pins

One signal can be mapped to one of several pins.

For additional information, refer to the Pinout.

30.5 Peripheral Dependencies

Refer to section 29.5 SERCOM Peripheral Dependencies.

30.6 Functional Description

30.6.1 Principle of Operation

The USART uses the following lines for data transfer:

- RxD for receiving
- TxD for transmitting
- XCK for the transmission clock in synchronous operation

USART data transfer is frame based. A serial frame consists of:

- 1 start bit
- From 5 to 9 data bits (MSB or LSB first)
- No, even or odd parity bit
- 1 or 2 stop bits

A frame starts with the start bit followed by one character of data bits. If enabled, the parity bit is inserted after the data bits and before the first stop bit. After the stop bit(s) of a frame, either the next frame can follow immediately, or

the communication line can return to the idle (high) state. The figure below illustrates the possible frame formats. Values inside brackets ([x]) denote optional bits.

Figure 30-2. Frame Formats



St Start bit. Signal is always low.

n, [n] Data bits. 0 to [5..9]

[P] Parity bit. Either odd or even.

Sp, [Sp] Stop bit. Signal is always high.

IDLE No frame is transferred on the communication line. Signal is always high in this state.

30.6.2 Basic Operation

30.6.2.1 Initialization

The following registers are enable-protected, meaning they can only be written when the USART is disabled (CTRL.ENABLE=0):

- Control A register (CTRLA), except the Enable (ENABLE) and Software Reset (SWRST) bits.
- Control B register (CTRLB), except the Receiver Enable (RXEN) and Transmitter Enable (TXEN) bits.
- Baud register (BAUD)

When the USART is enabled or is being enabled (CTRLA.ENABLE=1), any writing attempt to these registers will be discarded. If the peripheral is being disabled, writing to these registers will be executed after disabling is completed. Enable-protection is denoted by the "Enable-Protection" property in the register description.

Before the USART is enabled, it must be configured by these steps:

1. Select either external (0x0) or internal clock (0x1) by writing the Operating Mode value in the CTRLA register (CTRLA.MODE).
2. Select either asynchronous (0) or or synchronous (1) communication mode by writing the Communication Mode bit in the CTRLA register (CTRLA.CMODE).
3. Select pin for receive data by writing the Receive Data Pinout value in the CTRLA register (CTRLA.RXPO).
4. Select pads for the transmitter and external clock by writing the Transmit Data Pinout bit in the CTRLA register (CTRLA.TXPO).
5. Configure the Character Size field in the CTRLB register (CTRLB.CHSIZE) for character size.
6. Set the Data Order bit in the CTRLA register (CTRLA.DORD) to determine MSB- or LSB-first data transmission.
7. To use parity mode:
   7.1. Enable parity mode by writing 0x1 to the Frame Format field in the CTRLA register (CTRLA.FORM).
   7.2. Configure the Parity Mode bit in the CTRLB register (CTRLB.PMODE) for even or odd parity.
8. Configure the number of stop bits in the Stop Bit Mode bit in the CTRLB register (CTRLB.SBMODE).
9. When using an internal clock, write the Baud register (BAUD) to generate the desired baud rate.
10. Enable the transmitter and receiver by writing '1' to the Receiver Enable and Transmitter Enable bits in the CTRLB register (CTRLB.RXEN and CTRLB.TXEN).

30.6.2.2 Enabling, Disabling, and Resetting

This peripheral is enabled by writing '1' to the Enable bit in the Control A register (CTRLA.ENABLE), and disabled by writing '0' to it.

The peripheral must be enabled (CTRLA.ENABLE = 1) before issuing the Software Reset.

Refer to the CTRLA register description for details.

30.6.2.3 Clock Generation and Selection

For both synchronous and asynchronous modes, the clock used for shifting and sampling data can be generated internally by the SERCOM baud-rate generator or supplied externally through the XCK line.

The synchronous mode is selected by writing a '1' to the Communication Mode bit in the Control A register (CTRLA.CMODE), the asynchronous mode is selected by writing a '0' to CTRLA.CMODE.

The internal clock source is selected by writing a '1' to the Operation Mode bit field in the Control A register (CTRLA.MODE), the external clock source is selected by writing a '0' to CTRLA.MODE.

The SERCOM baud-rate generator is configured as in the figure below.

In asynchronous mode (CTRLA.CMODE=0), the 16-bit Baud register value is used.

In synchronous mode (CTRLA.CMODE=1), the eight LSBs of the Baud register are used. Refer to Clock Generation – Baud-Rate Generator for details on configuring the baud rate.

Figure 30-3. Clock Generation

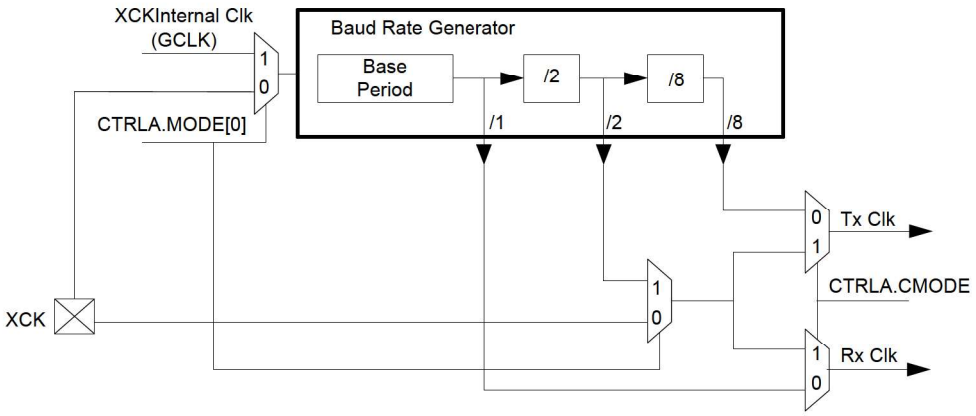

30.6.2.3.1 Synchronous Clock Operation

In synchronous mode, the CTRLA.MODE bit field determines whether the transmission clock line (XCK) serves either as input or output. The dependency between clock edges, data sampling, and data change is the same for internal and external clocks. Data input on the RxD pin is sampled at the opposite XCK clock edge when data is driven on the TxD pin.

The Clock Polarity bit in the Control A register (CTRLA.CPOL) selects which XCK clock edge is used for RxD sampling, and which is used for TxD change:

When CTRLA.CPOL is '0', the data will be changed on the rising edge of XCK, and sampled on the falling edge of XCK.

When CTRLA.CPOL is '1', the data will be changed on the falling edge of XCK, and sampled on the rising edge of XCK.

Figure 30-4. Synchronous Mode XCK Timing

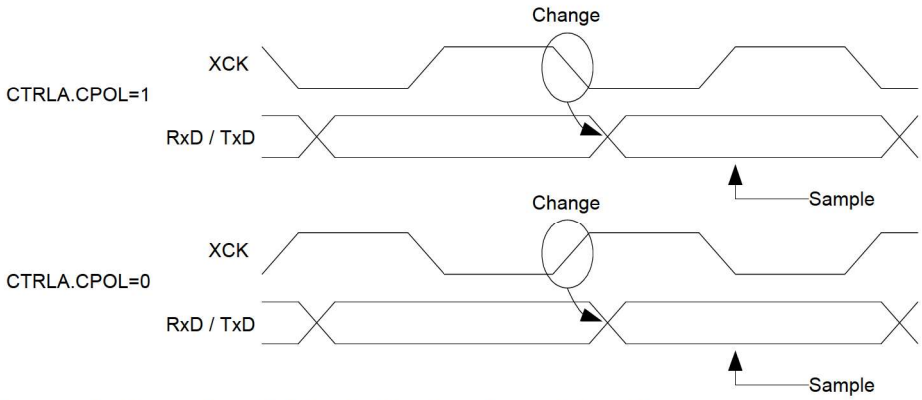

When the clock is provided through XCK (CTRLA.MODE=0x0), the shift registers operate directly on the XCK clock. This means that XCK is not synchronized with the system clock and, therefore, can operate at frequencies up to the system frequency.

30.6.2.4 Data Register

The USART Transmit Data register (TxDATA) and USART Receive Data register (RxDATA) share the same I/O address, referred to as the Data register (DATA). Writing the DATA register will update the TxDATA register. Reading the DATA register will return the contents of the RxDATA register.

30.6.2.5 Data Transmission

Data transmission is initiated by writing the data to be sent into the DATA register. Then, the data in TxDATA will be moved to the shift register when the shift register is empty and ready to send a new frame. After the shift register is loaded with data, the data frame will be transmitted.

When the entire data frame including stop bit(s) has been transmitted and no new data was written to DATA, the Transmit Complete interrupt flag in the Interrupt Flag Status and Clear register (INTFLAG.TXC) will be set, and the optional interrupt will be generated.

The Data Register Empty flag in the Interrupt Flag Status and Clear register (INTFLAG.DRE) indicates that the register is empty and ready for new data. The DATA register should only be written to when INTFLAG.DRE is set.

30.6.2.5.1 Disabling the Transmitter

The transmitter is disabled by writing '0' to the Transmitter Enable bit in the CTRLB register (CTRLB.TXEN).

Disabling the transmitter will complete only after any ongoing and pending transmissions are completed, i.e., there is no data in the transmit shift register and TxDATA to transmit.

30.6.2.6 Data Reception

The receiver accepts data when a valid Start bit is detected. Each bit following the Start bit will be sampled according to the baud rate or XCK clock, and shifted into the receive shift register until the first Stop bit of a frame is received. The second Stop bit will be ignored by the receiver.

When the first Stop bit is received and a complete serial frame is present in the Receive Shift register, the contents of the Shift register will be moved into the two-level receive buffer. Then, the Receive Complete Interrupt flag in the Interrupt Flag Status and Clear register (INTFLAG.RXC) will be set, and the optional interrupt can be generated.

The received data can be read from the DATA register when the Receive Complete Interrupt flag is set.

30.6.2.6.1 Disabling the Receiver

Writing '0' to the Receiver Enable bit in the CTRLB register (CTRLB.RXEN) will disable the receiver, flush the two-level receive buffer, and data from ongoing receptions will be lost.

30.6.2.6.2 Error Bits

The USART receiver has three error bits in the Status (STATUS) register: Frame Error (FERR), Buffer Overflow (BUFOVF), and Parity Error (PERR). Once an error happens, the corresponding error bit will be set until it is cleared by writing ‘1’ to it. These bits are also cleared automatically when the receiver is disabled.

There are two methods for buffer overflow notification, selected by the Immediate Buffer Overflow Notification bit in the Control A register (CTRLA.IBON):

When CTRLA.IBON=1, STATUS.BUFOVF is raised immediately upon buffer overflow. Software can then empty the receive FIFO by reading RxDATA, until the Receiver Complete Interrupt flag (INTFLAG.RXC) is cleared.

When CTRLA.IBON=0, the Buffer Overflow condition is attending data through the receive FIFO. After the received data is read, STATUS.BUFOVF and INTFLAG.ERROR will be set along with INTFLAG.RXC.

30.6.2.6.3 Asynchronous Data Reception

The USART includes a clock recovery and data recovery unit for handling asynchronous data reception.

The clock recovery logic can synchronize the incoming asynchronous serial frames at the RxD pin to the internally generated baud-rate clock.

The data recovery logic samples and applies a low-pass filter to each incoming bit, thereby improving the noise immunity of the receiver.

30.6.2.6.4 Asynchronous Operational Range

The operational range of the asynchronous reception depends on the accuracy of the internal baud-rate clock, the rate of the incoming frames, and the frame size (in number of bits). In addition, the operational range of the receiver is depending on the difference between the received bit rate and the internally generated baud rate. If the baud rate of an external transmitter is too high or too low compared to the internally generated baud rate, the receiver will not be able to synchronize the frames to the start bit.

There are two possible sources for a mismatch in baud rate: First, the reference clock will always have some minor instability. Second, the baud-rate generator cannot always do an exact division of the reference clock frequency to get the baud rate desired. In this case, the BAUD register value should be set to give the lowest possible error. Refer to Clock Generation – Baud-Rate Generator for details.

The recommended maximum receiver baud-rate errors for various character sizes are shown in the following table.

Table 30-2. Asynchronous Receiver Error for 16-fold Oversampling

D (Data bits+Parity)	R_{SLOW} [%]	R_{FAST} [%]	Max. total error [%]	Recommended max. Rx error [%]
5	94.12	107.69	+5.88/-7.69	±2.5
6	94.92	106.67	+5.08/-6.67	±2.0
7	95.52	105.88	+4.48/-5.88	±2.0
8	96.00	105.26	+4.00/-5.26	±2.0
9	96.39	104.76	+3.61/-4.76	±1.5
10	96.70	104.35	+3.30/-4.35	±1.5

The following equations calculate the ratio of the incoming data rate and internal receiver baud rate:

$$R_{\mathrm{SLOW}} = \frac{(D+1)S}{S-1+D\cdot S+S_F} \quad , \qquad R_{\mathrm{FAST}} = \frac{(D+2)S}{(D+1)S+S_M}$$

- R_{SLOW} is the ratio of the slowest incoming data rate that can be accepted in relation to the receiver baud rate
- R_{FAST} is the ratio of the fastest incoming data rate that can be accepted in relation to the receiver baud rate
- D is the sum of character size and parity size (D = 5 to 10 bits)
- S is the number of samples per bit (S = 16, 8 or 3)
- S_F is the first sample number used for majority voting (S_F = 7, 3, or 2) when CTRLA.SAMPA=0.
- S_M is the middle sample number used for majority voting (S_M = 8, 4, or 2) when CTRLA.SAMPA=0.

The recommended maximum Rx Error assumes that the receiver and transmitter equally divide the maximum total error. Its connection to the SERCOM Receiver error acceptance is depicted in this figure:

Figure 30-5. USART Rx Error Calculation

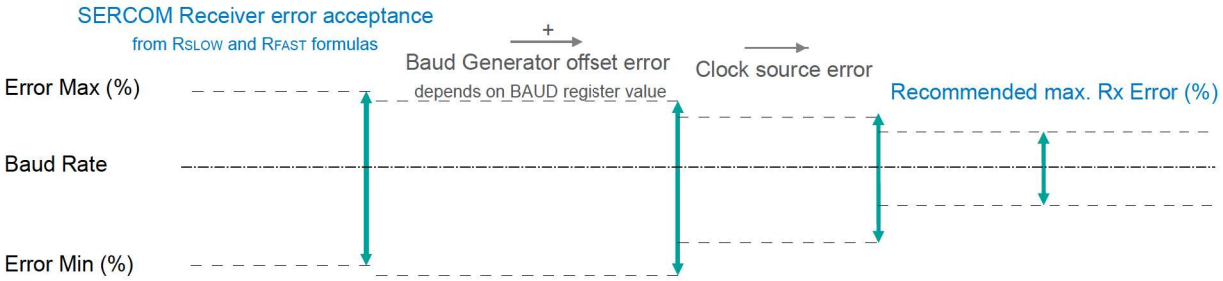

The recommendation values in the table above accommodate errors of the clock source and the baud generator. The following figure gives an example for a baud rate of 3Mbps:

Figure 30-6. USART Rx Error Calculation Example

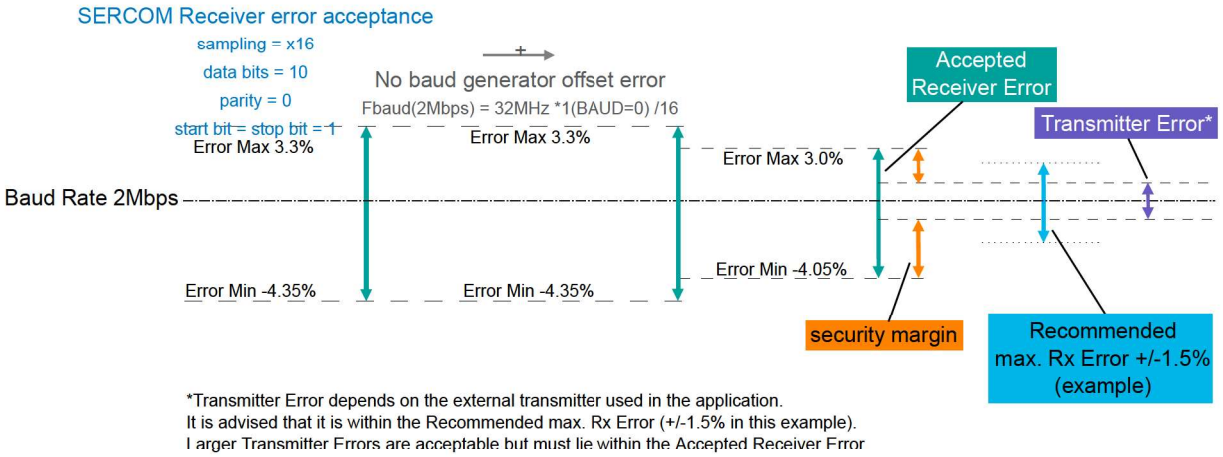

30.6.3 Additional Features

30.6.3.1 Parity

Even or odd parity can be selected for error checking by writing 0x1 to the Frame Format bit field in the Control A register (CTRLA.FORM).

If *even parity* is selected (CTRLB.PMODE=0), the parity bit of an outgoing frame is '1' if the data contains an odd number of bits that are '1', making the total number of '1' even.

If *odd parity* is selected (CTRLB.PMODE=1), the parity bit of an outgoing frame is '1' if the data contains an even number of bits that are '0', making the total number of '1' odd.

When parity checking is enabled, the parity checker calculates the parity of the data bits in incoming frames and compares the result with the parity bit of the corresponding frame. If a parity error is detected, the Parity Error bit in the Status register (STATUS.PERR) is set.

30.6.3.2 Hardware Handshaking

The USART features an out-of-band hardware handshaking flow control mechanism, implemented by connecting the RTS and CTS pins with the remote device, as shown in the figure below.

Figure 30-7. Connection with a Remote Device for Hardware Handshaking

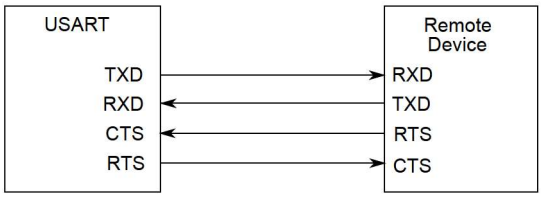

Hardware handshaking is only available in the following configuration:

- USART with internal clock (CTRLA.MODE=1),
- Asynchronous mode (CTRLA.CMODE=0),
- and Flow control pinout (CTRLA.TXPO=2).

When the receiver is disabled or the receive FIFO is full, the receiver will drive the RTS pin high. This notifies the remote device to stop transfer after the ongoing transmission. Enabling and disabling the receiver by writing to CTRLB.RXEN will set/clear the RTS pin after a synchronization delay. When the receive FIFO goes full, RTS will be set immediately and the frame being received will be stored in the shift register until the receive FIFO is no longer full.

Figure 30-8. Receiver Behavior when Operating with Hardware Handshaking

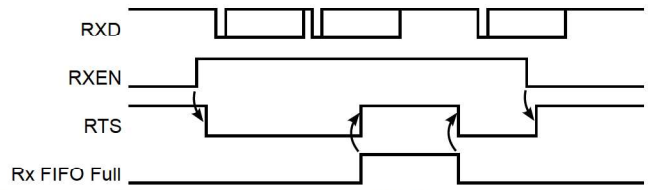

The current CTS Status is in the STATUS register (STATUS.CTS). Character transmission will start only if STATUS.CTS=0. When CTS is set, the transmitter will complete the ongoing transmission and stop transmitting.

Figure 30-9. Transmitter Behavior when Operating with Hardware Handshaking

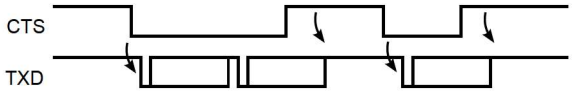

30.6.3.3 IrDA Modulation and Demodulation

Transmission and reception can be encoded IrDA compliant up to 115.2 kb/s. IrDA modulation and demodulation work in the following configuration:

- IrDA encoding enabled (CTRLB.ENC = 1),
- Asynchronous mode (CTRLA.CMODE = 0),
- and 16x sample rate (CTRLA.SAMPR[0] = 0).

During transmission, each low bit is transmitted as a high pulse. The pulse width is 3/16 of the baud rate period, as illustrated in the figure below.

Figure 30-10. IrDA Transmit Encoding

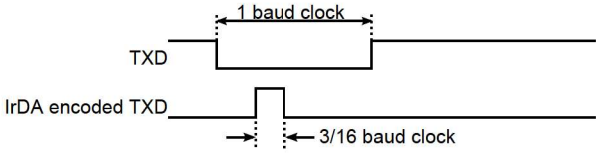

The reception decoder has two main functions.

The first is to synchronize the incoming data to the IrDA baud rate counter. Synchronization is performed at the start of each zero pulse.

The second main function is to decode incoming Rx data. If a pulse width meets the minimum length set by configuration (RXPL.RXPL), it is accepted. When the baud rate counter reaches its middle value (1/2 bit length), it is transferred to the receiver.

Note: The polarity of the transmitter and receiver are opposite: During transmission, a '0' bit is transmitted as a '1' pulse. During reception, an accepted '0' pulse is received as a '0' bit.

Example: The figure below illustrates reception where RXPL.RXPL is set to 19. This indicates that the pulse width should be at least 20 SE clock cycles. When using BAUD = 0xE666 or 160 SE cycles per bit, this corresponds to 2/16 baud clock as minimum pulse width required. In this case the first bit is accepted as a '0', the second bit is a '1', and the third bit is also a '1'. A low pulse is rejected since it does not meet the minimum requirement of 2/16 baud clock.

Figure 30-11. IrDA Receive Decoding

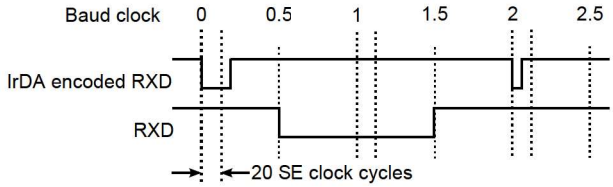

30.6.3.4 Break Character Detection and Auto-Baud

Break character detection and auto-baud are available in the following configuration:

- Auto-baud frame format (CTRLA.FORM = 0x04 or 0x05),
- Asynchronous mode (CTRLA.CMODE = 0),
- 16x sample rate using fractional baud rate generation (CTRLA.SAMPR = 1).

The USART uses a break detection threshold of greater than 11 nominal bit times at the configured baud rate. At any time, if more than 11 consecutive dominant bits are detected on the bus, the USART detects a Break Field. When a Break Field has been detected, the Receive Break interrupt flag (INTFLAG.RXBRK) is set and the USART expects the Sync Field character to be 0x55. This field is used to update the actual baud rate in order to stay synchronized. If the received Sync character is not 0x55, then the Inconsistent Sync Field error flag (STATUS.ISF) is set along with the Error interrupt flag (INTFLAG.ERROR), and the baud rate is unchanged.

After a break field is detected and the start bit of the Sync Field is detected, a counter is started. The counter is then incremented for the next 8 bit times of the Sync Field. At the end of these 8 bit times, the counter is stopped. At this moment, the 13 most significant bits of the counter (value divided by 8) give the new clock divider (BAUD.BAUD), and the 3 least significant bits of this value (the remainder) give the new Fractional Part (BAUD.FP).

When the Sync Field has been received, the clock divider (BAUD.BAUD) and the Fractional Part (BAUD.FP) are updated after a synchronization delay. After the Break and Sync Fields are received, multiple characters of data can be received.

30.6.3.5 LIN Master

LIN master is available with the following configuration:

- LIN master format (CTRLA.FORM = 0x02)
- Asynchronous mode (CTRLA.CMODE = 0)
- 16x sample rate using fractional baud rate generation (CTRLA.SAMPR = 1)

LIN frames start with a header transmitted by the master. The header consists of the break, sync, and identifier fields. After the master transmits the header, the addressed slave will respond with 1-8 bytes of data plus checksum.

Figure 30-12. LIN Frame Format

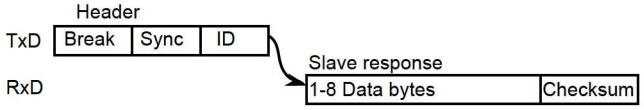

Using the LIN command field (CTRLB.LINCMD), the complete header can be automatically transmitted, or software can control transmission of the various header components.

When CTRLB.LINCMD=0x1, software controls transmission of the LIN header. In this case, software uses the following sequence.

- CTRLB.LINCMD is written to 0x1.
- DATA register written to 0x00. This triggers transmission of the break field by hardware. Note that writing the DATA register with any other value will also result in the transmission of the break field by hardware.
- DATA register written to 0x55. The 0x55 value (sync) is transmitted.
- DATA register written to the identifier. The identifier is transmitted.

When CTRLB.LINCMD=0x2, hardware controls transmission of the LIN header. In this case, software uses the following sequence.

- CTRLB.LINCMD is written to 0x2.
- DATA register written to the identifier. This triggers transmission of the complete header by hardware. First the break field is transmitted. Next, the sync field is transmitted, and finally the identifier is transmitted.

In LIN master mode, the length of the break field is programmable using the break length field (CTRLC.BRKLEN). When the LIN header command is used (CTRLB.LINCMD=0x2), the delay between the break and sync fields, in addition to the delay between the sync and ID fields are configurable using the header delay field (CTRLC.HDRDLY). When manual transmission is used (CTRLB.LINCMD=0x1), software controls the delay between break and sync.

Figure 30-13. LIN Header Generation

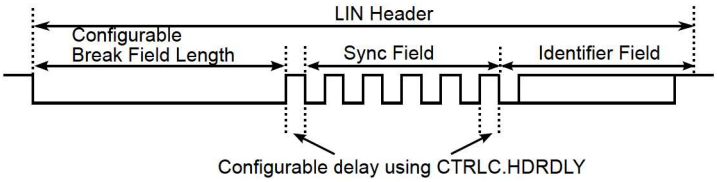

After header transmission is complete, the slave responds with 1-8 data bytes plus checksum.

30.6.3.6 RS485

RS485 is available with the following configuration:

- USART frame format (CTRLA.FORM = 0x00 or 0x01)
- RS485 pinout (CTRLA.TXPO=0x3).

The RS485 feature enables control of an external line driver as shown in the figure below. While operating in RS485 mode, the transmit enable pin (TE) is driven high when the transmitter is active.

Figure 30-14. RS485 Bus Connection

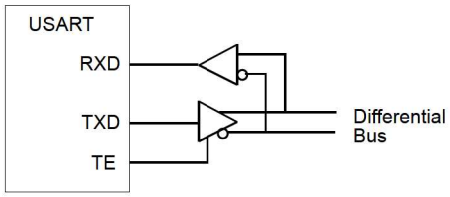

The TE pin will remain high for the complete frame including stop bit(s). If a Guard Time is programmed in the Control C register (CTRLC.GTIME), the line will remain driven after the last character completion. The following figure shows a transfer with one stop bit and CTRLC.GTIME=3.

Figure 30-15. Example of TE Drive with Guard Time



The Transmit Complete interrupt flag (INTFLAG.TXC) will be raised after the guard time is complete and TE goes low.

30.6.3.7 Collision Detection

When the receiver and transmitter are connected either through pin configuration or externally, transmit collision can be detected after selecting the Collision Detection Enable bit in the CTRLB register (CTRLB.COLDEN = 1). To detect

collision, the receiver and transmitter must be enabled (CTRLB.RXEN = 1 and CTRLB.TXEN = 1) and the peripheral bus (APB) must operate at or above the SERCOMx GCLK frequency.

Collision detection is performed for each bit transmitted by comparing the received value with the transmit value, as shown in the figure below. While the transmitter is idle (no transmission in progress), characters can be received on RxD without triggering a collision.

Figure 30-16. Collision Checking

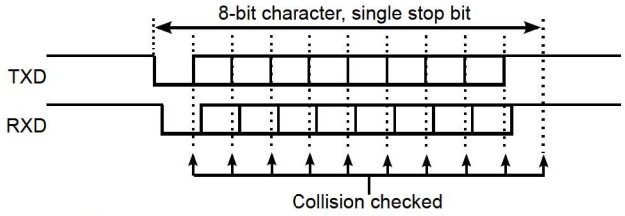

The figure below illustrates the conditions for a collision detection. In this case, the start bit and the first data bit are received with the same value as transmitted. The second received data bit is found to be different than the transmitted bit at the detection point, which indicates a collision.

Figure 30-17. Collision Detected

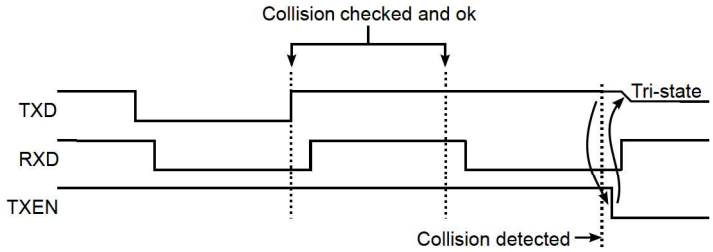

When a collision is detected, the USART follows these sequence:

1. Abort the current transfer.
2. Flush the transmit buffer.
3. Disable transmitter (CTRLB.TXEN = 0).
   - This is done after a synchronization delay. The CTRLB Synchronization Busy bit (SYNCBUSY.CTRLB) will be set until this is complete.
   - After disabling, the TxD pin will be tri-stated.
4. Set the Collision Detected bit (STATUS.COLL) along with the Error interrupt flag (INTFLAG.ERROR).
5. Set the Transmit Complete interrupt flag (INTFLAG.TXC), becasue the transmit buffer no longer contains data.

After a collision, software must manually enable the transmitter again before continuing, after assuring that the CTRLB Synchronization Busy bit (SYNCBUSY.CTRLB) is not set.

30.6.3.8 Loop-Back Mode

For loop-back mode, configure the Receive Data Pinout (CTRLA.RXPO) and Transmit Data Pinout (CTRLA.TXPO) to use the same data pins for transmit and receive. The loop-back is through the pad, so the signal is also available externally.

30.6.3.9 Start-of-Frame Detection

The USART start-of-frame detector can wake up the CPU when it detects a start bit. In standby sleep mode, the internal fast startup oscillator must be selected as the GCLK_SERCOMx_CORE source.

When a 1-to-0 transition is detected on RxD, the 8MHz Internal Oscillator is powered up and the USART clock is enabled. After startup, the rest of the data frame can be received, provided that the baud rate is slow enough in relation to the fast startup internal oscillator start-up time. Refer to 43. Electrical Characteristics for details. The start-up time of this oscillator varies with supply voltage and temperature.

The USART start-of-frame detection works both in asynchronous and synchronous modes. It is enabled by writing '1' to the Start of Frame Detection Enable bit in the Control B register (CTRLB.SFDE).

If the Receive Start Interrupt Enable bit in the Interrupt Enable Set register (INTENSET.RXS) is set, the Receive Start interrupt is generated immediately when a start is detected.

When using start-of-frame detection without the Receive Start interrupt, start detection will force the 8MHz Internal Oscillator and USART clock active while the frame is being received. In this case, the CPU will not wake up until the Receive Complete interrupt is generated.

30.6.3.10 Sample Adjustment

In asynchronous mode (CTRLA.CMODE=0), three samples in the middle are used to determine the value based on majority voting. The three samples used for voting can be selected using the Sample Adjustment bit field in Control A register (CTRLA.SAMPA). When CTRLA.SAMPA=0, samples 7-8-9 are used for 16x oversampling, and samples 3-4-5 are used for 8x oversampling.

30.6.4 DMA, Interrupts and Events

Table 30-3. Module Request for SERCOM USART

Condition	Request		
	DMA	Interrupt	Event
Data Register Empty (DRE)	Yes (request cleared when data is written)	Yes	NA
Receive Complete (RXC)	Yes (request cleared when data is read)	Yes	
Transmit Complete (TXC)	NA	Yes	
Receive Start (RXS)	NA	Yes	
Clear to Send Input Change (CTSIC)	NA	Yes	
Receive Break (RXBRK)	NA	Yes	
Error (ERROR)	NA	Yes	

30.6.4.1 DMA Operation

The USART generates the following DMA requests:

- Data received (RX): The request is set when data is available in the receive FIFO. The request is cleared when DATA is read.
- Data transmit (TX): The request is set when the transmit buffer (TX DATA) is empty. The request is cleared when DATA is written.

30.6.4.2 Interrupts

The USART has the following interrupt sources. These are asynchronous interrupts, and can wake up the device from any sleep mode:

- Data Register Empty (DRE)
- Receive Complete (RXC)
- Transmit Complete (TXC)
- Receive Start (RXS)
- Clear to Send Input Change (CTSIC)
- Received Break (RXBRK)
- Error (ERROR)

Each interrupt source has its own interrupt flag. The interrupt flag in the Interrupt Flag Status and Clear register (INTFLAG) will be set when the interrupt condition is met. Each interrupt can be individually enabled by writing '1' to the corresponding bit in the Interrupt Enable Set register (INTENSET), and disabled by writing '1' to the corresponding bit in the Interrupt Enable Clear register (INTENCLR). As both the INTENSET and INTENCLR registers always reflect the same value, the status of interrupt enablement can be read from either register.

An interrupt request is generated when the interrupt flag is set and if the corresponding interrupt is enabled. The interrupt request remains active until either the interrupt flag is cleared, the interrupt is disabled, or the USART is reset. For details on clearing interrupt flags, refer to the INTFLAG register description.

The value of INTFLAG indicates which interrupt is executed. Note that interrupts must be globally enabled for interrupt requests. Refer to Nested Vector Interrupt Controller for details.

When the Data Register Empty (DRE) interrupt is enabled, it is necessary to write the DATA register before entering standby mode.

30.6.5 Sleep Mode Operation

The behavior in Sleep mode is depending on the clock source and the Run In Standby bit in the Control A register (CTRLA.RUNSTDBY):

- Internal clocking, CTRLA.RUNSTDBY = 1: GCLK_SERCOMx_CORE can be enabled in all sleep modes. Any interrupt can wake up the device (except Frame error (FERR) and Parity error (PERR) that are part of the ERROR interrupt).
- External clocking, CTRLA.RUNSTDBY = 1: The Receive Start and the Receive Complete interrupts can wake up the device. Any interrupt can wake up the device (except Frame error (FERR) and Parity error (PERR) that are part of the ERROR interrupt).
- Internal clocking, CTRLA.RUNSTDBY = 0: Internal clock will be disabled, after any ongoing transfer was completed. The Receive Start and the Receive Complete interrupt(s) can wake up the device.
- External clocking, CTRLA.RUNSTDBY = 0: External clock will be disconnected, after any ongoing transfer was completed. All reception will be dropped.

When targeting the lowest STANDBY power consumption for a transmit only application, the Receiver must remain disabled, but the receiver data pinout (CTRLA.RXPO) must be set to match the transmit data pinout (CTRLA.TXPO).

30.6.6 Synchronization

Due to asynchronicity between the main clock domain and the peripheral clock domains, some registers need to be synchronized when written or read.

The following bits are synchronized when written:

- Software Reset bit in the CTRLA register (CTRLA.SWRST)
- Enable bit in the CTRLA register (CTRLA.ENABLE)
- Receiver Enable bit in the CTRLB register (CTRLB.RXEN)
- Transmitter Enable bit in the Control B register (CTRLB.TXEN)

Note: CTRLB.RXEN is write-synchronized somewhat differently. See also 30.7.2 CTRLB for details.

Required write-synchronization is denoted by the "Write-Synchronized" property in the register description.

30.7 Register Summary

Offset	Name	Bit Pos.	7	6	5	4	3	2	1	0
0x00	CTRLA	7:0	RUNSTDBY			MODE[2:0]			ENABLE	SWRST
		15:8	SAMPR[2:0]							IBON
		23:16	SAMPA[1:0]		RXPO[1:0]				TXPO[1:0]	
		31:24		DORD	CPOL	CMODE	FORM[3:0]			
0x04	CTRLB	7:0		SBMODE				CHSIZE[2:0]		
		15:8			PMODE			ENC	SFDE	COLDEN
		23:16							RXEN	TXEN
		31:24							LINCMD[1:0]	
0x08	CTRLC	7:0						GTIME[2:0]		
		15:8					HDRDLY[1:0]		BRKLEN[1:0]	
		23:16								
		31:24								
0x0C	BAUD	7:0	BAUD[7:0]							
		15:8	BAUD[15:8]							
0x0E	RXPL	7:0	RXPL[7:0]							
0x0F ... 0x13	Reserved									
0x14	INTENCLR	7:0	ERROR		RXBRK	CTSIC	RXS	RXC	TXC	DRE
0x15	Reserved									
0x16	INTENSET	7:0	ERROR		RXBRK	CTSIC	RXS	RXC	TXC	DRE
0x17	Reserved									
0x18	INTFLAG	7:0	ERROR		RXBRK	CTSIC	RXS	RXC	TXC	DRE
0x19	Reserved									
0x1A	STATUS	7:0		TXE	COLL	ISF	CTS	BUFOVF	FERR	PERR
		15:8								
0x1C	SYNCBUSY	7:0						CTRLB	ENABLE	SWRST
		15:8								
		23:16								
		31:24								
0x20 ... 0x27	Reserved									
0x28	DATA	7:0	DATA[7:0]							
		15:8								DATA[8]

30.7.1 Control A

Name: CTRLA
Offset: 0x00
Reset: 0x00000000
Property: PAC Write-Protection, Enable-Protected Bits, Write-Synchronized Bits

Bit	31	30	29	28	27	26	25	24
		DORD	CPOL	CMODE	FORM[3:0]			
Access		R/W	R/W	R/W	R/W	R/W	R/W	R/W
Reset		0	0	0	0	0	0	0

Bit	23	22	21	20	19	18	17	16
	SAMPA[1:0]		RXPO[1:0]				TXPO[1:0]	
Access	R/W	R/W	R/W	R/W			R/W	R/W
Reset	0	0	0	0			0	0

Bit	15	14	13	12	11	10	9	8
	SAMPR[2:0]							IBON
Access	R/W	R/W	R/W					R/W
Reset	0	0	0					0

Bit	7	6	5	4	3	2	1	0
	RUNSTDBY			MODE[2:0]			ENABLE	SWRST
Access	R/W			R/W	R/W	R/W	R/W	R/W
Reset	0			0	0	0	0	0

Bit 30 – DORD Data Order
This bit selects the data order when a character is shifted out from the Data register.
Note: This bit is enable-protected. This bit is not synchronized.

Value	Description
0	MSB is transmitted first.
1	LSB is transmitted first.

Bit 29 – CPOL Clock Polarity
This bit selects the relationship between data output change and data input sampling in synchronous mode.
Note: This bit is enable-protected. This bit is not synchronized.

CPOL	TxD Change	RxD Sample
0x0	Rising XCK edge	Falling XCK edge
0x1	Falling XCK edge	Rising XCK edge

Bit 28 – CMODE Communication Mode
This bit selects asynchronous or synchronous communication.
Note: This bit is enable-protected. This bit is not synchronized.

Value	Description
0	Asynchronous communication.
1	Synchronous communication.

Bits 27:24 – FORM[3:0] Frame Format
These bits define the frame format.
Note: This bit field is enable-protected. This bit field is not synchronized.

FORM[3:0]	Description
0x0	USART frame

.....continued	
FORM[3:0]	**Description**
0x1	USART frame with parity
0x2	LIN Master - Break and sync generation. See LIN Command (CTRLB.LINCMD).
0x3	Reserved
0x4	Auto-baud (LIN Slave) - break detection and auto-baud.
0x5	Auto-baud - break detection and auto-baud with parity
0x6-0xF	Reserved

Bits 23:22 – SAMPA[1:0] Sample Adjustment
These bits define the sample adjustment.
Note: This bit field is enable-protected. This bit field is not synchronized.

SAMPA[1:0]	16x Over-sampling (CTRLA.SAMPR=0 or 1)	8x Over-sampling (CTRLA.SAMPR=2 or 3)
0x0	7-8-9	3-4-5
0x1	9-10-11	4-5-6
0x2	11-12-13	5-6-7
0x3	13-14-15	6-7-8

Bits 21:20 – RXPO[1:0] Receive Data Pinout
These bits define the receive data (RxD) pin configuration.
Note: This bit field is enable-protected. This bit field is not synchronized.

RXPO[1:0]	Name	Description
0x0	PAD[0]	SERCOM PAD[0] is used for data reception
0x1	PAD[1]	SERCOM PAD[1] is used for data reception
0x2	PAD[2]	SERCOM PAD[2] is used for data reception
0x3	PAD[3]	SERCOM PAD[3] is used for data reception

Bits 17:16 – TXPO[1:0] Transmit Data Pinout
These bits define the transmit data (TxD) and XCK pin configurations.
Note: This bit field is enable-protected. This bit field is not synchronized.

TXPO	TxD Pin Location	XCK Pin Location (When Applicable)	RTS/TE	CTS
0x0	SERCOM PAD[0]	SERCOM PAD[1]	N/A	N/A
0x1	SERCOM PAD[2]	SERCOM PAD[3]	N/A	N/A
0x2	SERCOM PAD[0]	N/A	SERCOM PAD[2]	SERCOM PAD[3]
0x3	SERCOM_PAD[0]	SERCOM_PAD[1]	SERCOM_PAD[2]	N/A

Bits 15:13 – SAMPR[2:0] Sample Rate
These bits select the sample rate.
Note: This bit field is enable-protected. This bit field is not synchronized.

SAMPR[2:0]	Description
0x0	16x over-sampling using arithmetic baud rate generation.
0x1	16x over-sampling using fractional baud rate generation.
0x2	8x over-sampling using arithmetic baud rate generation.
0x3	8x over-sampling using fractional baud rate generation.
0x4	3x over-sampling using arithmetic baud rate generation.
0x5-0x7	Reserved

Bit 8 – IBON Immediate Buffer Overflow Notification
This bit controls when the buffer overflow status bit (STATUS.BUFOVF) is asserted when a buffer overflow occurs.
Note: This bit is enable-protected. This bit is not synchronized.

Value	Description
0	STATUS.BUFOVF is asserted when it occurs in the data stream.
1	STATUS.BUFOVF is asserted immediately upon buffer overflow.

Bit 7 – RUNSTDBY Run In Standby
This bit defines the functionality in standby sleep mode.
Note: This bit is enable-protected. This bit is not synchronized.

RUNSTDBY	External Clock	Internal Clock
0x0	External clock is disconnected when ongoing transfer is finished. All reception is dropped.	Generic clock is disabled when ongoing transfer is finished. The device will not wake up on either Receive Start or Transfer Complete interrupt unless the appropriate ONDEMAND bits are set in the clocking chain.
0x1	Wake on Receive Start or Receive Complete interrupt.	Generic clock is enabled in all sleep modes. Any interrupt can wake up the device.

Bits 4:2 – MODE[2:0] Operating Mode
These bits select the USART serial communication interface of the SERCOM.
Note: This bit field is enable-protected. This bit field is not synchronized.

Value	Description
0x0	USART with external clock
0x1	USART with internal clock

Bit 1 – ENABLE Enable
Notes:

1. This bit is write-synchronized: SYNCBUSY.ENABLE must be checked to ensure the CTRLA.ENABLE synchronization is complete.
2. This bit is not enable-protected.

Value	Description
0	The peripheral is disabled or being disabled.
1	The peripheral is enabled or being enabled.

Bit 0 – SWRST Software Reset
Writing '0' to this bit has no effect.
Writing '1' to this bit resets all registers in the SERCOM, except DBGCTRL, to their initial state, and the SERCOM will be disabled.
Writing '1' to CTRLA.SWRST will always take precedence, meaning that all other writes in the same write-operation will be discarded. Any register write access during the ongoing reset will result in an APB error. Reading any register will return the reset value of the register.
Notes:

1. This bit is write-synchronized: SYNCBUSY.SWRST must be checked to ensure the CTRLA.SWRST synchronization is complete.
2. This bit is not enable-protected.

Value	Description
0	There is no reset operation ongoing.
1	The reset operation is ongoing.

30.7.2 Control B

Name: CTRLB
Offset: 0x04
Reset: 0x00000000
Property: PAC Write-Protection, Enable-Protected Bits, Write-Synchronized Bits

Bit	31	30	29	28	27	26	25	24
							LINCMD[1:0]	
Access							R/W	R/W
Reset							0	0

Bit	23	22	21	20	19	18	17	16
							RXEN	TXEN
Access							R/W	R/W
Reset							0	0

Bit	15	14	13	12	11	10	9	8
			PMODE			ENC	SFDE	COLDEN
Access			R/W			R/W	R/W	R/W
Reset			0			0	0	0

Bit	7	6	5	4	3	2	1	0
		SBMODE				CHSIZE[2:0]		
Access		R/W				R/W	R/W	R/W
Reset		0				0	0	0

Bits 25:24 – LINCMD[1:0] LIN Command
These bits define the LIN header transmission control. This field is only valid in LIN master mode (CTRLA.FORM= LIN Master).
These are strobe bits and will always read back as zero.
Notes:

1. This bit field is write-synchronized: SYNCBUSY.CTRLB must be checked to ensure the CTRLB.LINCMD synchronization is complete.
2. This bit field is enable-protected.

Value	Description
0x0	Normal USART transmission.
0x1	Break field is transmitted when DATA is written.
0x2	Break, sync and identifier are automatically transmitted when DATA is written with the identifier.
0x3	Reserved

Bit 17 – RXEN Receiver Enable
Writing '0' to this bit will disable the USART receiver. Disabling the receiver will flush the receive buffer and clear the FERR, PERR and BUFOVF bits in the STATUS register.
Writing '1' to CTRLB.RXEN when the USART is disabled will set CTRLB.RXEN immediately. When the USART is enabled, CTRLB.RXEN will be cleared, and SYNCBUSY.CTRLB will be set and remain set until the receiver is enabled. When the receiver is enabled, CTRLB.RXEN will read back as '1'.
Writing '1' to CTRLB.RXEN when the USART is enabled will set SYNCBUSY.CTRLB, which will remain set until the receiver is enabled, and CTRLB.RXEN will read back as '1'.
Notes:

1. This bit is write-synchronized: SYNCBUSY.CTRLB must be checked to ensure the CTRLB.RXEN synchronization is complete.
2. This bit is not enable-protected.

Value	Description
0	The receiver is disabled or being enabled.
1	The receiver is enabled or will be enabled when the USART is enabled.

Bit 16 – TXEN Transmitter Enable
Writing '0' to this bit will disable the USART transmitter. Disabling the transmitter will not become effective until ongoing and pending transmissions are completed.
Writing '1' to CTRLB.TXEN when the USART is disabled will set CTRLB.TXEN immediately. When the USART is enabled, CTRLB.TXEN will be cleared, and SYNCBUSY.CTRLB will be set and remain set until the transmitter is enabled. When the transmitter is enabled, CTRLB.TXEN will read back as '1'.
Writing '1' to CTRLB.TXEN when the USART is enabled will set SYNCBUSY.CTRLB, which will remain set until the transmitter is enabled, and CTRLB.TXEN will read back as '1'.
Notes:

1. This bit is write-synchronized: SYNCBUSY.CTRLB must be checked to ensure the CTRLB.TXEN synchronization is complete.
2. This bit is not enable-protected.

Value	Description
0	The transmitter is disabled or being enabled.
1	The transmitter is enabled or will be enabled when the USART is enabled.

Bit 13 – PMODE Parity Mode
This bit selects the type of parity used when parity is enabled (CTRLA.FORM is '1'). The transmitter will automatically generate and send the parity of the transmitted data bits within each frame. The receiver will generate a parity value for the incoming data and parity bit, compare it to the parity mode and, if a mismatch is detected, STATUS.PERR will be set.
Note: This bit is enable-protected. This bit is not synchronized.

Value	Description
0	Even parity.
1	Odd parity.

Bit 10 – ENC Encoding Format
This bit selects the data encoding format.
Note: This bit is enable-protected. This bit is not synchronized.

Value	Description
0	Data is not encoded.
1	Data is IrDA encoded.

Bit 9 – SFDE Start of Frame Detection Enable
This bit controls whether the start-of-frame detector will wake up the device when a start bit is detected on the RxD line.
Note: This bit is enable-protected. This bit is not synchronized.

SFDE	INTENSET.RXS	INTENSET.RXC	Description
0	X	X	Start-of-frame detection disabled.
1	0	0	Reserved
1	0	1	Start-of-frame detection enabled. RXC wakes up the device from all sleep modes.
1	1	0	Start-of-frame detection enabled. RXS wakes up the device from all sleep modes.
1	1	1	Start-of-frame detection enabled. Both RXC and RXS wake up the device from all sleep modes.

Bit 8 – COLDEN Collision Detection Enable
This bit enables collision detection.
Note: This bit is enable-protected. This bit is not synchronized.

Value	Description
0	Collision detection is not enabled.
1	Collision detection is enabled.

Bit 6 – SBMODE Stop Bit Mode
This bit selects the number of stop bits transmitted.
Note: This bit is enable-protected. This bit is not synchronized.

Value	Description
0	One stop bit.
1	Two stop bits.

Bits 2:0 – CHSIZE[2:0] Character Size
These bits select the number of bits in a character.
Note: This bit is enable-protected. This bit is not synchronized.

CHSIZE[2:0]	Description
0x0	8 bits
0x1	9 bits
0x2-0x4	Reserved
0x5	5 bits
0x6	6 bits
0x7	7 bits

30.7.3 Control C

Name: CTRLC
Offset: 0x08
Reset: 0x00000000
Property: PAC Write-Protection, Enable-Protected

Bit	31	30	29	28	27	26	25	24
Access								
Reset								

Bit	23	22	21	20	19	18	17	16
Access								
Reset								

Bit	15	14	13	12	11	10	9	8
					HDRDLY[1:0]		BRKLEN[1:0]	
Access					R/W	R/W	R/W	R/W
Reset					0	0	0	0

Bit	7	6	5	4	3	2	1	0
						GTIME[2:0]		
Access						R/W	R/W	R/W
Reset						0	0	0

Bits 11:10 – HDRDLY[1:0] LIN Master Header Delay
These bits define the delay between break and sync transmission in addition to the delay between the sync and identifier (ID) fields when in LIN master mode (CTRLA.FORM=0x2).
This field is only valid when using the LIN header command (CTRLB.LINCMD=0x2).

Value	Description
0x0	Delay between break and sync transmission is 1 bit time. Delay between sync and ID transmission is 1 bit time.
0x1	Delay between break and sync transmission is 4 bit time. Delay between sync and ID transmission is 4 bit time.
0x2	Delay between break and sync transmission is 8 bit time. Delay between sync and ID transmission is 4 bit time.
0x3	Delay between break and sync transmission is 14 bit time. Delay between sync and ID transmission is 4 bit time.

Bits 9:8 – BRKLEN[1:0] LIN Master Break Length
These bits define the length of the break field transmitted when in LIN master mode (CTRLA.FORM=0x2).

Value	Description
0x0	Break field transmission is 13 bit times
0x1	Break field transmission is 17 bit times
0x2	Break field transmission is 21 bit times
0x3	Break field transmission is 26 bit times

Bits 2:0 – GTIME[2:0] Guard Time
These bits define the guard time when using RS485 mode (CTRLA.FORM=0x0 or CTRLA.FORM=0x1, and CTRLA.TXPO=0x3).
For RS485 mode, the guard time is programmable from 0-7 bit times and defines the time that the transmit enable pin (TE) remains high after the last stop bit is transmitted and there is no remaining data to be transmitted.

30.7.4 Baud

Name: BAUD
Offset: 0x0C
Reset: 0x0000
Property: Enable-Protected, PAC Write-Protection

Bit	15	14	13	12	11	10	9	8
	BAUD[15:8]							
Access	R/W	R/W	R/W	R/W	R/W	R/W	R/W	R/W
Reset	0	0	0	0	0	0	0	0

Bit	7	6	5	4	3	2	1	0
	BAUD[7:0]							
Access	R/W	R/W	R/W	R/W	R/W	R/W	R/W	R/W
Reset	0	0	0	0	0	0	0	0

Bits 15:0 – BAUD[15:0] Baud Value
Arithmetic Baud Rate Generation (`CTRLA.SAMPR[0]=0`):
These bits control the clock generation, as described in the SERCOM Baud Rate section.
If Fractional Baud Rate Generation (`CTRLA.SAMPR[0]=1`) bit positions 15 to 13 are replaced by FP[2:0] Fractional Part:

- **Bits 15:13 - FP[2:0]: Fractional Part**

  These bits control the clock generation, as described in the SERCOM Clock Generation – Baud-Rate Generator section.
- **Bits 12:0 - BAUD[12:0]: Baud Value**

  These bits control the clock generation, as described in the SERCOM Clock Generation – Baud-Rate Generator section.

30.7.5 Receive Pulse Length Register

Name: RXPL
Offset: 0x0E
Reset: 0x00
Property: Enable-Protected, PAC Write-Protection

Bit	7	6	5	4	3	2	1	0
	RXPL[7:0]							
Access	R/W	R/W	R/W	R/W	R/W	R/W	R/W	R/W
Reset	0	0	0	0	0	0	0	0

Bits 7:0 – RXPL[7:0] Receive Pulse Length
When the encoding format is set to IrDA (CTRLB.ENC=1), these bits control the minimum pulse length that is required for a pulse to be accepted by the IrDA receiver with regards to the serial engine clock period SE_{per}.
$PULSE \geq \left(\mathrm{RXPL} + 2\right) \cdot SE_{per}$

30.7.6 Interrupt Enable Clear

Name: INTENCLR
Offset: 0x14
Reset: 0x00
Property: PAC Write-Protection

This register allows the user to disable an interrupt without doing a read-modify-write operation. Changes in this register will also be reflected in the Interrupt Enable Set register (INTENSET).

Bit	7	6	5	4	3	2	1	0
	ERROR		RXBRK	CTSIC	RXS	RXC	TXC	DRE
Access	R/W		R/W	R/W	R/W	R/W	R/W	R/W
Reset	0		0	0	0	0	0	0

Bit 7 – ERROR Error Interrupt Enable
Writing '0' to this bit has no effect.
Writing '1' to this bit will clear the Error Interrupt Enable bit, which disables the Error interrupt.

Value	Description
0	Error interrupt is disabled.
1	Error interrupt is enabled.

Bit 5 – RXBRK Receive Break Interrupt Enable
Writing '0' to this bit has no effect.
Writing '1' to this bit will clear the Receive Break Interrupt Enable bit, which disables the Receive Break interrupt.

Value	Description
0	Receive Break interrupt is disabled.
1	Receive Break interrupt is enabled.

Bit 4 – CTSIC Clear to Send Input Change Interrupt Enable
Writing '0' to this bit has no effect.
Writing '1' to this bit will clear the Clear To Send Input Change Interrupt Enable bit, which disables the Clear To Send Input Change interrupt.

Value	Description
0	Clear To Send Input Change interrupt is disabled.
1	Clear To Send Input Change interrupt is enabled.

Bit 3 – RXS Receive Start Interrupt Enable
Writing '0' to this bit has no effect.
Writing '1' to this bit will clear the Receive Start Interrupt Enable bit, which disables the Receive Start interrupt.

Value	Description
0	Receive Start interrupt is disabled.
1	Receive Start interrupt is enabled.

Bit 2 – RXC Receive Complete Interrupt Enable
Writing '0' to this bit has no effect.
Writing '1' to this bit will clear the Receive Complete Interrupt Enable bit, which disables the Receive Complete interrupt.

Value	Description
0	Receive Complete interrupt is disabled.
1	Receive Complete interrupt is enabled.

Bit 1 – TXC Transmit Complete Interrupt Enable
Writing '0' to this bit has no effect.
Writing '1' to this bit will clear the Transmit Complete Interrupt Enable bit, which disables the Receive Complete interrupt.

Value	Description
0	Transmit Complete interrupt is disabled.
1	Transmit Complete interrupt is enabled.

Bit 0 – DRE Data Register Empty Interrupt Enable
Writing '0' to this bit has no effect.
Writing '1' to this bit will clear the Data Register Empty Interrupt Enable bit, which disables the Data Register Empty interrupt.

Value	Description
0	Data Register Empty interrupt is disabled.
1	Data Register Empty interrupt is enabled.

30.7.7 Interrupt Enable Set

Name: INTENSET
Offset: 0x16
Reset: 0x00
Property: PAC Write-Protection

This register allows the user to disable an interrupt without doing a read-modify-write operation. Changes in this register will also be reflected in the Interrupt Enable Clear register (INTENCLR).

Bit	7	6	5	4	3	2	1	0
	ERROR		RXBRK	CTSIC	RXS	RXC	TXC	DRE
Access	R/W		R/W	R/W	R/W	R/W	R/W	R/W
Reset	0		0	0	0	0	0	0

Bit 7 – ERROR Error Interrupt Enable
The Frame Error (FERR) and Parity Error (PERR) error interrupts will not wake the device from Standby mode.
Writing '0' to this bit has no effect.
Writing '1' to this bit will set the Error Interrupt Enable bit, which enables the Error interrupt.

Value	Description
0	Error interrupt is disabled.
1	Error interrupt is enabled.

Bit 5 – RXBRK Receive Break Interrupt Enable
Writing '0' to this bit has no effect.
Writing '1' to this bit will set the Receive Break Interrupt Enable bit, which enables the Receive Break interrupt.

Value	Description
0	Receive Break interrupt is disabled.
1	Receive Break interrupt is enabled.

Bit 4 – CTSIC Clear to Send Input Change Interrupt Enable
Writing '0' to this bit has no effect.
Writing '1' to this bit will set the Clear To Send Input Change Interrupt Enable bit, which enables the Clear To Send Input Change interrupt.

Value	Description
0	Clear To Send Input Change interrupt is disabled.
1	Clear To Send Input Change interrupt is enabled.

Bit 3 – RXS Receive Start Interrupt Enable
Writing '0' to this bit has no effect.
Writing '1' to this bit will set the Receive Start Interrupt Enable bit, which enables the Receive Start interrupt.

Value	Description
0	Receive Start interrupt is disabled.
1	Receive Start interrupt is enabled.

Bit 2 – RXC Receive Complete Interrupt Enable
Writing '0' to this bit has no effect.
Writing '1' to this bit will set the Receive Complete Interrupt Enable bit, which enables the Receive Complete interrupt.

Value	Description
0	Receive Complete interrupt is disabled.
1	Receive Complete interrupt is enabled.

Bit 1 – TXC Transmit Complete Interrupt Enable
Writing '0' to this bit has no effect.
Writing '1' to this bit will set the Transmit Complete Interrupt Enable bit, which enables the Transmit Complete interrupt.

Value	Description
0	Transmit Complete interrupt is disabled.
1	Transmit Complete interrupt is enabled.

Bit 0 – DRE Data Register Empty Interrupt Enable
Writing '0' to this bit has no effect.
Writing '1' to this bit will set the Data Register Empty Interrupt Enable bit, which enables the Data Register Empty interrupt.

Value	Description
0	Data Register Empty interrupt is disabled.
1	Data Register Empty interrupt is enabled.

30.7.8 Interrupt Flag Status and Clear

Name: INTFLAG
Offset: 0x18
Reset: 0x00
Property: -

Bit	7	6	5	4	3	2	1	0
	ERROR		RXBRK	CTSIC	RXS	RXC	TXC	DRE
Access	R/W		R/W	R/W	R/W	R	R/W	R
Reset	0		0	0	0	0	0	0

Bit 7 – ERROR Error
This flag is cleared by writing '1' to it.
This bit is set when any error is detected. Errors that will set this flag have corresponding status flags in the STATUS register. Errors that will set this flag are COLL, ISF, BUFOVF, FERR, and PERR.
The Frame Error (FERR) and Parity Error (PERR) error interrupts will not wake the device from Standby mode.
Writing '0' to this bit has no effect.
Writing '1' to this bit will clear the flag.

Bit 5 – RXBRK Receive Break
This flag is cleared by writing '1' to it.
This flag is set when auto-baud is enabled (CTRLA.FORM) and a break character is received.
Writing '0' to this bit has no effect.
Writing '1' to this bit will clear the flag.

Bit 4 – CTSIC Clear to Send Input Change
This flag is cleared by writing a '1' to it.
This flag is set when a change is detected on the CTS pin.
Writing '0' to this bit has no effect.
Writing '1' to this bit will clear the flag.

Bit 3 – RXS Receive Start
This flag is cleared by writing '1' to it.
This flag is set when a start condition is detected on the RxD line and start-of-frame detection is enabled (CTRLB.SFDE is '1').
Writing '0' to this bit has no effect.
Writing '1' to this bit will clear the Receive Start interrupt flag.

Bit 2 – RXC Receive Complete
This flag is cleared by reading the Data register (DATA) or by disabling the receiver.
This flag is set when there are unread data in DATA.
Writing '0' to this bit has no effect.
Writing '1' to this bit has no effect.

Bit 1 – TXC Transmit Complete
This flag is cleared by writing '1' to it or by writing new data to DATA.
This flag is set when the entire frame in the transmit shift register has been shifted out and there are no new data in DATA.
Writing '0' to this bit has no effect.
Writing '1' to this bit will clear the flag.

Bit 0 – DRE Data Register Empty
This flag is cleared by writing new data to DATA.
This flag is set when DATA is empty and ready to be written.
Writing '0' to this bit has no effect.

Writing '1' to this bit has no effect.

30.7.9 Status

Name: STATUS
Offset: 0x1A
Reset: 0x0000
Property: -

Bit	15	14	13	12	11	10	9	8
Access								
Reset								

Bit	7	6	5	4	3	2	1	0
		TXE	COLL	ISF	CTS	BUFOVF	FERR	PERR
Access		R/W	R/W	R/W	R	R/W	R/W	R/W
Reset		0	0	0	0	0	0	0

Bit 6 – TXE Transmitter Empty
When CTRLA.FORM is set to LIN master mode, this bit is set when any ongoing transmission is complete and TxDATA is empty.
When CTRLA.FORM is not set to LIN master mode, this bit will always read back as zero.
Writing '0' to this bit has no effect.
Writing '1' to this bit will clear it.

Bit 5 – COLL Collision Detected
This bit is cleared by writing '1' to the bit or by disabling the receiver.
This bit is set when collision detection is enabled (CTRLB.COLDEN) and a collision is detected.
Writing '0' to this bit has no effect.
Writing '1' to this bit will clear it.

Bit 4 – ISF Inconsistent Sync Field
This bit is cleared by writing '1' to the bit or by disabling the receiver.
This bit is set when the frame format is set to auto-baud (CTRLA.FORM) and a sync field not equal to 0x55 is received.
Writing '0' to this bit has no effect.
Writing '1' to this bit will clear it.

Bit 3 – CTS Clear to Send
This bit indicates the current level of the CTS pin when flow control is enabled (CTRLA.TXPO).
Writing '0' to this bit has no effect.
Writing '1' to this bit has no effect.

Bit 2 – BUFOVF Buffer Overflow
Reading this bit before reading the Data register will indicate the error status of the next character to be read.
This bit is cleared by writing '1' to the bit or by disabling the receiver.
This bit is set when a buffer overflow condition is detected. A buffer overflow occurs when the receive buffer is full, there is a new character waiting in the receive shift register and a new start bit is detected.
Writing '0' to this bit has no effect.
Writing '1' to this bit will clear it.

Bit 1 – FERR Frame Error
Reading this bit before reading the Data register will indicate the error status of the next character to be read.
This bit is cleared by writing '1' to the bit or by disabling the receiver.
This bit is set if the received character had a frame error, i.e., when the first stop bit is zero.
Writing '0' to this bit has no effect.
Writing '1' to this bit will clear it.

Bit 0 – PERR Parity Error
Reading this bit before reading the Data register will indicate the error status of the next character to be read.
This bit is cleared by writing '1' to the bit or by disabling the receiver.
This bit is set if parity checking is enabled (CTRLA.FORM is 0x1, 0x5) and a parity error is detected.
Writing '0' to this bit has no effect.
Writing '1' to this bit will clear it.

30.7.10 Synchronization Busy

Name: SYNCBUSY
Offset: 0x1C
Reset: 0x00000000
Property: -

Bit	31	30	29	28	27	26	25	24
Access								
Reset								

Bit	23	22	21	20	19	18	17	16
Access								
Reset								

Bit	15	14	13	12	11	10	9	8
Access								
Reset								

Bit	7	6	5	4	3	2	1	0
						CTRLB	ENABLE	SWRST
Access						R	R	R
Reset						0	0	0

Bit 2 – CTRLB CTRLB Synchronization Busy
Writing to the CTRLB register when the SERCOM is enabled requires synchronization. When writing to CTRLB the SYNCBUSY.CTRLB bit will be set until synchronization is complete. If CTRLB is written while SYNCBUSY.CTRLB is asserted, an APB error will be generated.

Value	Description
0	CTRLB synchronization is not busy.
1	CTRLB synchronization is busy.

Bit 1 – ENABLE SERCOM Enable Synchronization Busy
Enabling and disabling the SERCOM (CTRLA.ENABLE) requires synchronization. When written, the SYNCBUSY.ENABLE bit will be set until synchronization is complete.

Value	Description
0	Enable synchronization is not busy.
1	Enable synchronization is busy.

Bit 0 – SWRST Software Reset Synchronization Busy
Resetting the SERCOM (CTRLA.SWRST) requires synchronization. When written, the SYNCBUSY.SWRST bit will be set until synchronization is complete.

Value	Description
0	SWRST synchronization is not busy.
1	SWRST synchronization is busy.

30.7.11 Data

Name: DATA
Offset: 0x28
Reset: 0x0000
Property: -

Bit	15	14	13	12	11	10	9	8
								DATA[8]
Access								R/W
Reset								0

Bit	7	6	5	4	3	2	1	0
	DATA[7:0]							
Access	R/W	R/W	R/W	R/W	R/W	R/W	R/W	R/W
Reset	0	0	0	0	0	0	0	0

Bits 8:0 – DATA[8:0] Data
Reading these bits will return the contents of the Receive Data register. The register should be read only when the Receive Complete Interrupt Flag bit in the Interrupt Flag Status and Clear register (INTFLAG.RXC) is set. The status bits in STATUS should be read before reading the DATA value in order to get any corresponding error.
Writing these bits will write the Transmit Data register. This register should be written only when the Data Register Empty Interrupt Flag bit in the Interrupt Flag Status and Clear register (INTFLAG.DRE) is set.

31. SERCOM Serial Peripheral Interface (SERCOM SPI)

31.1 Overview

The serial peripheral interface (SPI) is one of the available modes in the Serial Communication Interface (SERCOM).

The SPI uses the SERCOM transmitter and receiver configured as shown in 31.3 Block Diagram. Each side, master and slave, depicts a separate SPI containing a shift register, a transmit buffer and a two-level receive buffer. In addition, the SPI master uses the SERCOM baud-rate generator, while the SPI slave can use the SERCOM address match logic. Labels in capital letters are synchronous to CLK_SERCOMx_APB and accessible by the CPU, while labels in lowercase letters are synchronous to the SCK clock.

31.2 Features

SERCOM SPI includes the following features:

- Full-duplex, four-wire interface (MISO, MOSI, SCK, $\overline{SS}$)
- One-level transmit buffer, two-level receive buffer
- Supports all four SPI modes of operation
- Single data direction operation allows alternate function on MISO or MOSI pin
- Selectable LSB- or MSB-first data transfer
- Can be used with DMA
- Master operation:
  - Serial clock speed, $f_{SCK}=1/t_{SCK}$(1)
  - 8-bit clock generator
  - Hardware controlled $\overline{SS}$
- Slave Operation:
  - Serial clock speed, $f_{SCK}=1/t_{SSCK}$(1)
  - Optional 8-bit address match operation
  - Operation in all sleep modes
  - Wake on $\overline{SS}$ transition

1. For t_{SCK} and t_{SSCK} values, refer to the SPI Mode Electrical Specifications.

31.3 Block Diagram

Figure 31-1. Full-Duplex SPI Master Slave Interconnection

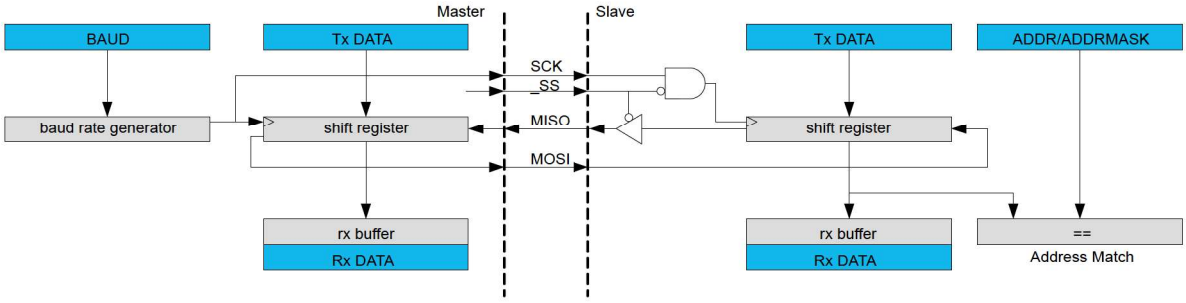

31.4 Signal Description

Table 31-1. SERCOM SPI Signals

Signal Name	Type	Description
PAD[3:0]	Digital I/O	General SERCOM pins

One signal can be mapped to one of several pins. For further information, refer to the Pinout Chapter.

31.5 Peripheral Dependencies

Refer to section 29.5 SERCOM Peripheral Dependencies.

31.6 Functional Description

31.6.1 Principle of Operation

The SPI is a high-speed synchronous data transfer interface. It allows high-speed communication between the device and peripheral devices.

The SPI can operate as master or slave. As master, the SPI initiates and controls all data transactions. The SPI is single buffered for transmitting and double buffered for receiving.

When transmitting data, the Data register can be loaded with the next character to be transmitted during the current transmission.

When receiving, the data is transferred to the two-level receive buffer, and the receiver is ready for a new character.

The SPI transaction format is shown in SPI Transaction Format. Each transaction can contain one or more characters. The character size is configurable, and can be either 8 or 9 bits.

Figure 31-2. SPI Transaction Format

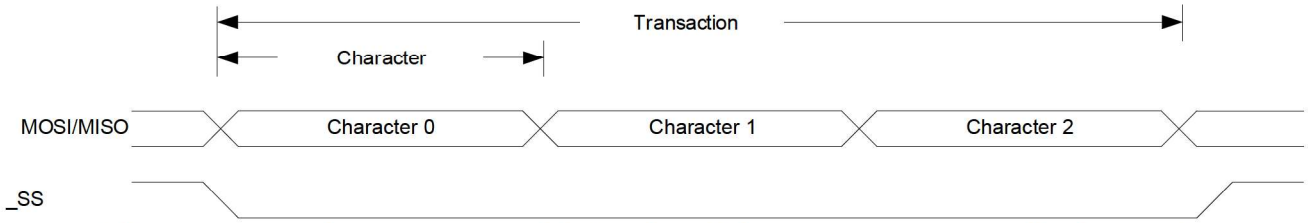

The SPI master must pull the slave select line ($\overline{SS}$) of the desired slave low to initiate a transaction if multiple slaves are connected to the bus. The slave select line can be wired low if there is only one SPI slave on the bus. The master and slave prepare data to send via their respective Shift registers, and the master generates the serial clock on the SCK line.

Data is always shifted from master to slave on the Master Output Slave Input line (MOSI); data is shifted from slave to master on the Master Input Slave Output line (MISO).

Each time character is shifted out from the master, a character will be shifted out from the slave simultaneously. To signal the end of a transaction, the master will pull the $\overline{SS}$ line high.

31.6.2 Basic Operation

31.6.2.1 Initialization

The following registers are enable-protected, meaning that they can only be written when the SPI is disabled (CTRL.ENABLE=0):

- Control A register (CTRLA), except Enable (CTRLA.ENABLE) and Software Reset (CTRLA.SWRST)
- Control B register (CTRLB), except Receiver Enable (CTRLB.RXEN)

- Baud register (BAUD)
- Address register (ADDR)

When the SPI is enabled or is being enabled (CTRLA.ENABLE=1), any writing to these registers will be discarded.

When the SPI is being disabled, writing to these registers will be completed after the disabling.

Enable-protection is denoted by the Enable-Protection property in the register description.

Initialize the SPI by following these steps:

1. Select SPI mode in master / slave operation in the Operating Mode bit group in the CTRLA register (CTRLA.MODE= 0x2 or 0x3).
2. Select transfer mode for the Clock Polarity bit and the Clock Phase bit in the CTRLA register (CTRLA.CPOL and CTRLA.CPHA) if desired.
3. Select the Frame Format value in the CTRLA register (CTRLA.FORM).
4. Configure the Data In Pinout field in the Control A register (CTRLA.DIPO) for SERCOM pads of the receiver.
5. Configure the Data Out Pinout bit group in the Control A register (CTRLA.DOPO) for SERCOM pads of the transmitter.
6. Select the Character Size value in the CTRLB register (CTRLB.CHSIZE).
7. Write the Data Order bit in the CTRLA register (CTRLA.DORD) for data direction.
8. If the SPI is used in master mode:
   8.1. Select the desired baud rate by writing to the Baud register (BAUD).
   8.2. If Hardware SS control is required, write '1' to the Master Slave Select Enable bit in CTRLB register (CTRLB.MSSEN).
9. Enable the receiver by writing the Receiver Enable bit in the CTRLB register (CTRLB.RXEN=1).

31.6.2.2 Enabling, Disabling, and Resetting

This peripheral is enabled by writing '1' to the Enable bit in the Control A register (CTRLA.ENABLE), and disabled by writing '0' to it.

Writing ‘1’ to the Software Reset bit in the Control A register (CTRLA.SWRST) will reset all registers of this peripheral to their initial states, except the DBGCTRL register, only when CRTLA.ENABLE is '1'.

Refer to the CTRLA register description for details.

31.6.2.3 Clock Generation

In SPI master operation (CTRLA.MODE=0x3), the serial clock (SCK) is generated internally by the SERCOM baud-rate generator.

In SPI mode, the baud-rate generator is set to synchronous mode. The 8-bit Baud register (BAUD) value is used for generating SCK and clocking the shift register. Refer to Clock Generation – Baud-Rate Generator for more details.

In SPI slave operation (CTRLA.MODE is 0x2), the clock is provided by an external master on the SCK pin. This clock is used to directly clock the SPI shift register.

31.6.2.4 Data Register

The SPI Transmit Data register (TxDATA) and SPI Receive Data register (RxDATA) share the same I/O address, referred to as the SPI Data register (DATA). Writing DATA register will update the Transmit Data register. Reading the DATA register will return the contents of the Receive Data register.

31.6.2.5 SPI Transfer Modes

There are four combinations of SCK phase and polarity to transfer serial data. The SPI data transfer modes are shown in SPI Transfer Modes (Table) and SPI Transfer Modes (Figure).

SCK phase is configured by the Clock Phase bit in the CTRLA register (CTRLA.CPHA). SCK polarity is programmed by the Clock Polarity bit in the CTRLA register (CTRLA.CPOL). Data bits are shifted out and latched in on opposite edges of the SCK signal. This ensures sufficient time for the data signals to stabilize.

Table 31-2. SPI Transfer Modes

Mode	CPOL	CPHA	Leading Edge	Trailing Edge
0	0	0	Rising, sample	Falling, setup
1	0	1	Rising, setup	Falling, sample
2	1	0	Falling, sample	Rising, setup
3	1	1	Falling, setup	Rising, sample

Note:
Leading edge is the first clock edge in a clock cycle.

Trailing edge is the second clock edge in a clock cycle.

Figure 31-3. SPI Transfer Modes

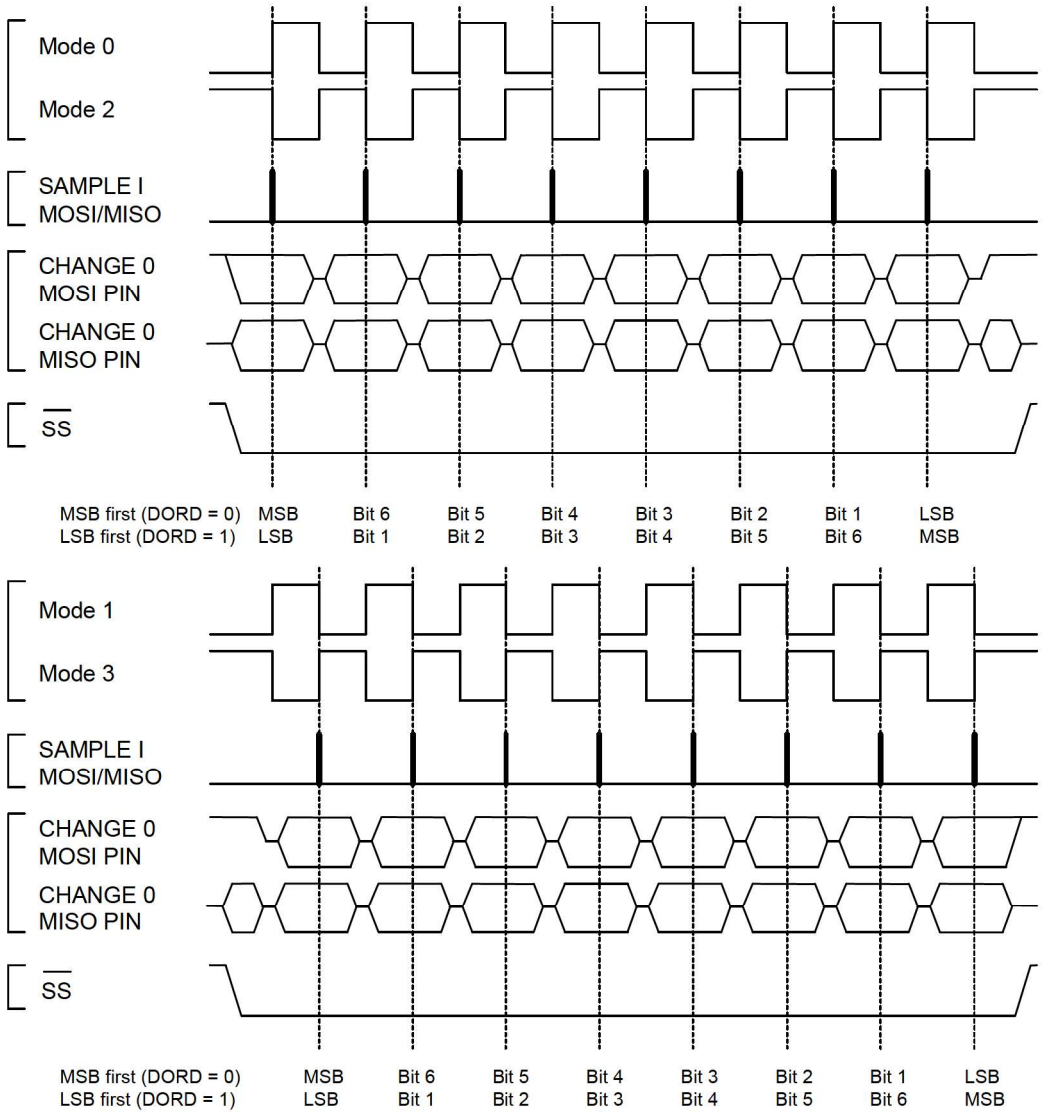

31.6.2.6 Transferring Data

31.6.2.6.1 Master

In master mode (CTRLA.MODE=0x3), when Master Slave Enable Select (CTRLB.MSSEN) is '1', hardware will control the $\overline{SS}$ line.

When Master Slave Select Enable (CTRLB.MSSEN) is '0', the $\overline{SS}$ line must be configured as an output. $\overline{SS}$ can be assigned to any general purpose I/O pin. When the SPI is ready for a data transaction, software must pull the $\overline{SS}$ line low.

When writing a character to the Data register (DATA), the character will be transferred to the shift register. Once the content of TxDATA has been transferred to the shift register, the Data Register Empty flag in the Interrupt Flag Status and Clear register (INTFLAG.DRE) will be set. And a new character can be written to DATA.

Each time one character is shifted out from the master, another character will be shifted in from the slave simultaneously. If the receiver is enabled (CTRLA.RXEN=1), the contents of the shift register will be transferred to the two-level receive buffer. The transfer takes place in the same clock cycle as the last data bit is shifted in. Then the Receive Complete Interrupt flag in the Interrupt Flag Status and Clear register (INTFLAG.RXC) will be set. The received data can be retrieved by reading DATA.

When the last character has been transmitted and there is no valid data in DATA, the Transmit Complete Interrupt flag in the Interrupt Flag Status and Clear register (INTFLAG.TXC) will be set. When the transaction is finished, the master must pull the $\overline{SS}$ line high to notify the slave. If Master Slave Select Enable (CTRLB.MSSEN) is set to '0', the software must pull the $\overline{SS}$ line high.

31.6.2.6.2 Slave

In slave mode (CTRLA.MODE=0x2), the SPI interface will remain inactive with the MISO line tri-stated as long as the $\overline{SS}$ pin is pulled high. Software may update the contents of DATA at any time as long as the Data Register Empty flag in the Interrupt Status and Clear register (INTFLAG.DRE) is set.

When $\overline{SS}$ is pulled low and SCK is running, the slave will sample and shift out data according to the transaction mode set. When the content of TxDATA has been loaded into the shift register, INTFLAG.DRE will be set, and new data can be written to DATA.

Similar to the master, the slave will receive one character for each character transmitted. A character will be transferred into the two-level receive buffer within the same clock cycle its last data bit is received. The received character can be retrieved from DATA when the Receive Complete interrupt flag (INTFLAG.RXC) is set.

When the master pulls the $\overline{SS}$ line high, the transaction is done and the Transmit Complete Interrupt flag in the Interrupt Flag Status and Clear register (INTFLAG.TXC) will be set.

After DATA is written it takes up to three SCK clock cycles until the content of DATA is ready to be loaded into the shift register on the next character boundary. As a consequence, the first character transferred in a SPI transaction will not be the content of DATA. This can be avoided by using the preloading feature. Refer to 31.6.3.2 Preloading of the Slave Shift Register.

When transmitting several characters in one SPI transaction, the data has to be written into DATA register with at least three SCK clock cycles left in the current character transmission. If this criteria is not met, the previously received character will be transmitted.

Once the DATA register is empty, it takes three CLK_SERCOM_APB cycles for INTFLAG.DRE to be set.

31.6.2.7 Receiver Error Bit

The SPI receiver has one error bit: the Buffer Overflow bit (BUFOVF), which can be read from the Status register (STATUS). Once an error happens, the bit will stay set until it is cleared by writing '1' to it. The bit is also automatically cleared when the receiver is disabled.

There are two methods for buffer overflow notification, selected by the immediate buffer overflow notification bit in the Control A register (CTRLA.IBON):

If CTRLA.IBON=1, STATUS.BUFOVF is raised immediately upon buffer overflow. Software can then empty the receive FIFO by reading RxDATA until the receiver complete interrupt flag in the Interrupt Flag Status and Clear register (INTFLAG.RXC) goes low.

If CTRLA.IBON=0, the buffer overflow condition travels with data through the receive FIFO. After the received data is read, STATUS.BUFOVF and INTFLAG.ERROR will be set along with INTFLAG.RXC, and RxDATA will be zero.

31.6.3 Additional Features

31.6.3.1 Address Recognition

When the SPI is configured for slave operation (CTRLA.MODE=0x2) with address recognition (CTRLA.FORM is 0x2), the SERCOM address recognition logic is enabled: the first character in a transaction is checked for an address match.

If there is a match, the Receive Complete Interrupt flag in the Interrupt Flag Status and Clear register (INTFLAG.RXC) is set, the MISO output is enabled, and the transaction is processed. If the device is in sleep mode, an address match can wake up the device in order to process the transaction.

If there is no match, the complete transaction is ignored.

If a 9-bit frame format is selected, only the lower 8 bits of the shift register are checked against the Address register (ADDR).

Preload must be disabled (CTRLB.PLOADEN=0) in order to use this mode.

31.6.3.2 Preloading of the Slave Shift Register

When starting a transaction, the slave will first transmit the contents of the shift register before loading new data from DATA. The first character sent can be either the reset value of the shift register (if this is the first transmission since the last reset) or the last character in the previous transmission.

Preloading can be used to preload data into the shift register while $\overline{SS}$ is high: this eliminates sending a dummy character when starting a transaction. If the shift register is not preloaded, the current contents of the shift register will be shifted out.

Only one data character will be preloaded into the shift register while the synchronized $\overline{SS}$ signal is high. If the next character is written to DATA before $\overline{SS}$ is pulled low, the second character will be stored in DATA until transfer begins.

For proper preloading, sufficient time must elapse between $\overline{SS}$ going low and the first SCK sampling edge, as in Timing Using Preloading. See also 43. Electrical Characteristics for timing details.

Preloading is enabled by writing '1' to the Slave Data Preload Enable bit in the CTRLB register (CTRLB.PLOADEN).

The Preload function (CTRLB.PLOADEN) must not be used when the Master cannot maintain the /SS in a low state until transmission is complete.

Figure 31-4. Timing Using Preloading

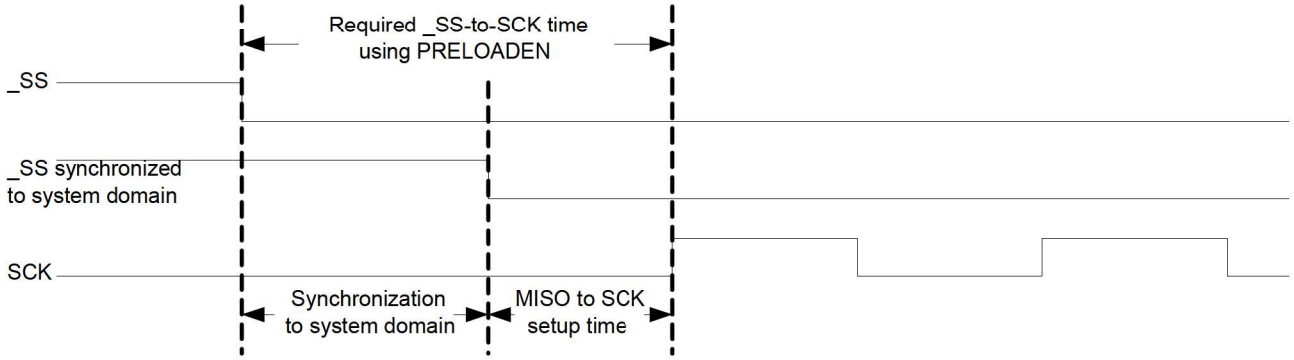

31.6.3.3 Master with Several Slaves

Master with multiple slaves in parallel is only available when Master Slave Select Enable (CTRLB.MSSEN) is set to zero and hardware $\overline{SS}$ control is disabled. If the bus consists of several SPI slaves, an SPI master can use general purpose I/O pins to control the $\overline{SS}$ line to each of the slaves on the bus, as shown in Multiple Slaves in Parallel. In this configuration, the single selected SPI slave will drive the tri-state MISO line.

Figure 31-5. Multiple Slaves in Parallel

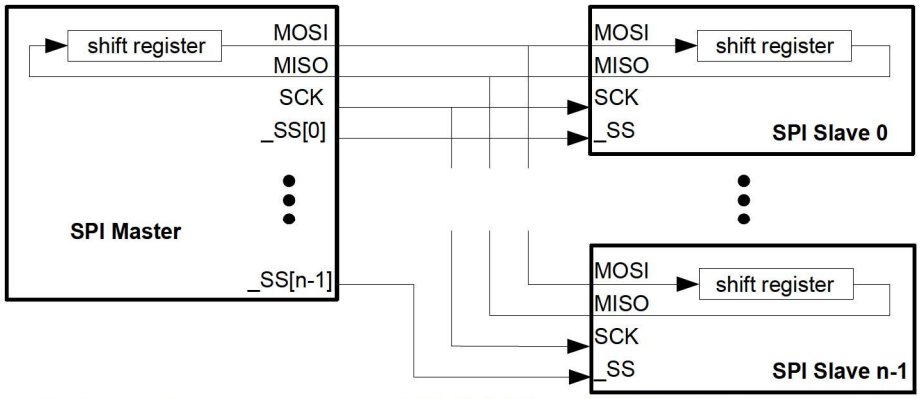

Another configuration is multiple slaves in series, as in Multiple Slaves in Series. In this configuration, all n attached slaves are connected in series. A common $\overline{SS}$ line is provided to all slaves, enabling them simultaneously. The master must shift n characters for a complete transaction. Depending on the Master Slave Select Enable bit (CTRLB.MSSEN), the $\overline{SS}$ line can be controlled either by hardware or user software and normal GPIO.

Figure 31-6. Multiple Slaves in Series

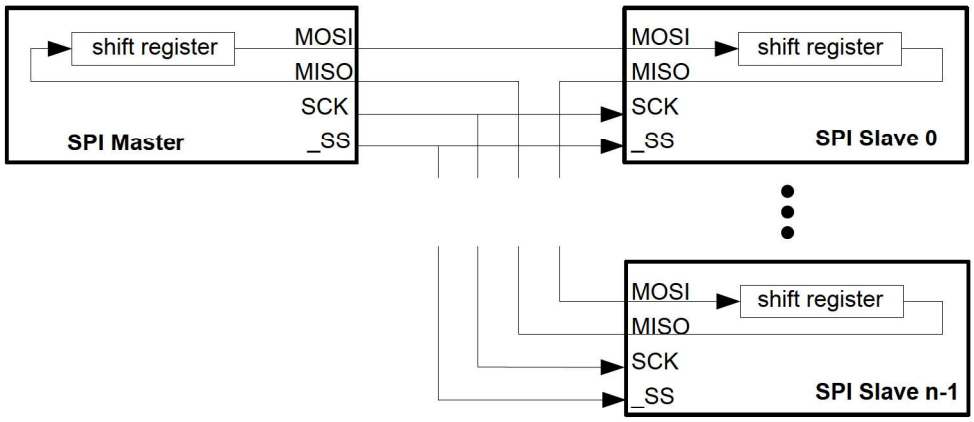

31.6.3.4 Loop-Back Mode

For Loop-Back mode, configure the Data In Pinout (CTRLA.DIPO) and Data Out Pinout (CTRLA.DOPO) to use the same data pins for transmit and receive. The loop-back is through the pad, hence the signal is also available externally.

31.6.3.5 Hardware Controlled $\overline{SS}$

In master mode, a single $\overline{SS}$ chip select can be controlled by hardware by writing the Master Slave Select Enable (CTRLB.MSSEN) bit to '1'. In this mode, the $\overline{SS}$ pin is driven low for a minimum of one baud cycle before transmission begins, and stays low for a minimum of one baud cycle after transmission completes. If back-to-back frames are transmitted, the $\overline{SS}$ pin will always be driven high for a minimum of one baud cycle between frames.

In Hardware Controlled $\overline{SS}$, the time T is between one and two baud cycles depending on the SPI transfer mode.

Figure 31-7. Hardware Controlled $\overline{SS}$

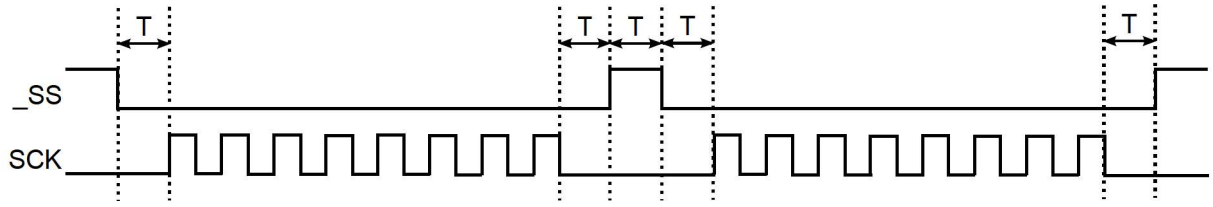

T = 1 to 2 baud cycles

When CTRLB.MSSEN=0, the $\overline{SS}$ pin(s) is/are controlled by user software and normal GPIO.

31.6.3.6 Slave Select Low Detection

In slave mode, the SPI can wake the CPU when the slave select ($\overline{SS}$) goes low. When the Slave Select Low Detect is enabled (CTRLB.SSDE=1), a high-to-low transition will set the Slave Select Low interrupt flag (INTFLAG.SSL) and the device will wake up if applicable.

31.6.4 DMA, Interrupts, and Events

Table 31-3. Module Request for SERCOM SPI

Condition	Request		
	DMA	Interrupt	Event
Data Register Empty (DRE)	Yes (request cleared when data is written)	Yes	NA
Receive Complete (RXC)	Yes (request cleared when data is read)	Yes	
Transmit Complete (TXC)	NA	Yes	
Slave Select low (SSL)	NA	Yes	
Error (ERROR)	NA	Yes	

31.6.4.1 DMA Operation

The SPI generates the following DMA requests:

- Data received (RX): The request is set when data is available in the receive FIFO. The request is cleared when DATA is read.
- Data transmit (TX): The request is set when the transmit buffer (TX DATA) is empty. The request is cleared when DATA is written.

31.6.4.2 Interrupts

The SPI has the following interrupt sources. These are asynchronous interrupts, and can wake-up the device from any Sleep mode:

- Data Register Empty (DRE)
- Receive Complete (RXC)
- Transmit Complete (TXC)
- Slave Select Low (SSL)
- Error (ERROR)

Each interrupt source has its own Interrupt flag. The Interrupt flag in the Interrupt Flag Status and Clear register (INTFLAG) will be set when the Interrupt condition is met. Each interrupt can be individually enabled by writing '1' to the corresponding bit in the Interrupt Enable Set register (INTENSET), and disabled by writing '1' to the corresponding bit in the Interrupt Enable Clear register (INTENCLR). As both INTENSET and INTENCLR always reflect the same value, the status of interrupt enablement can be read from either register.

An interrupt request is generated when the Interrupt flag is set and if the corresponding interrupt is enabled. The interrupt request remains active until either the Interrupt flag is cleared, the interrupt is disabled, or the SPI is reset. For details on clearing Interrupt flags, refer to the INTFLAG register description.

The value of INTFLAG indicates which interrupt is executed. Note that interrupts must be globally enabled for interrupt requests. Refer to Nested Vector Interrupt Controller for details.

When the Data Register Empty (DRE) interrupt is enabled, it is necessary to write the DATA register before entering standby mode.

31.6.5 Sleep Mode Operation

The behavior in sleep mode is depending on the master/slave configuration and the Run In Standby bit in the Control A register (CTRLA.RUNSTDBY):

- Master operation, CTRLA.RUNSTDBY=1: The peripheral clock GCLK_SERCOM_CORE will continue to run in idle sleep mode and in standby sleep mode. Any interrupt can wake up the device.
- Master operation, CTRLA.RUNSTDBY=0: GLK_SERCOMx_CORE will be disabled after the ongoing transaction is finished. Any interrupt can wake up the device.
- Slave operation, CTRLA.RUNSTDBY=1: The Receive Complete interrupt can wake up the device.
- Slave operation, CTRLA.RUNSTDBY=0: All reception will be dropped, including the ongoing transaction.

31.6.6 Synchronization

Due to asynchronicity between the main clock domain and the peripheral clock domains, some registers need to be synchronized when written or read.

The following bits are synchronized when written:

- Software Reset bit in the CTRLA register (CTRLA.SWRST)
- Enable bit in the CTRLA register (CTRLA.ENABLE)
- Receiver Enable bit in the CTRLB register (CTRLB.RXEN)

Note: CTRLB.RXEN is write-synchronized somewhat differently. See the 31.7.2 CTRLB register for details.

Required write-synchronization is denoted by the "Write-Synchronized" property in the register description.

31.7 Register Summary

Offset	Name	Bit Pos.	7	6	5	4	3	2	1	0
0x00	CTRLA	7:0	RUNSTDBY			MODE[2:0]			ENABLE	SWRST
		15:8								IBON
		23:16			DIPO[1:0]				DOPO[1:0]	
		31:24		DORD	CPOL	CPHA	FORM[3:0]			
0x04	CTRLB	7:0		PLOADEN				CHSIZE[2:0]		
		15:8	AMODE[1:0]		MSSEN				SSDE	
		23:16							RXEN	
		31:24								
0x08 ... 0x0B	Reserved									
0x0C	BAUD	7:0	BAUD[7:0]							
0x0D ... 0x13	Reserved									
0x14	INTENCLR	7:0	ERROR				SSL	RXC	TXC	DRE
0x15	Reserved									
0x16	INTENSET	7:0	ERROR				SSL	RXC	TXC	DRE
0x17	Reserved									
0x18	INTFLAG	7:0	ERROR				SSL	RXC	TXC	DRE
0x19	Reserved									
0x1A	STATUS	7:0						BUFOVF		
		15:8								
0x1C	SYNCBUSY	7:0						CTRLB	ENABLE	SWRST
		15:8								
		23:16								
		31:24								
0x20 ... 0x23	Reserved									
0x24	ADDR	7:0	ADDR[7:0]							
		15:8								
		23:16	ADDRMASK[7:0]							
		31:24								
0x28	DATA	7:0	DATA[7:0]							
		15:8								DATA[8]
0x2A ... 0x2F	Reserved									
0x30	DBGCTRL	7:0								DBGSTOP

31.7.1 Control A

Name: CTRLA
Offset: 0x00
Reset: 0x00000000
Property: PAC Write-Protection, Enable-Protected Bits, Write-Synchronized Bits

Bit	31	30	29	28	27	26	25	24
		DORD	CPOL	CPHA	FORM[3:0]			
Access		R/W	R/W	R/W	R/W	R/W	R/W	R/W
Reset		0	0	0	0	0	0	0

Bit	23	22	21	20	19	18	17	16
			DIPO[1:0]				DOPO[1:0]	
Access			R/W	R/W			R/W	R/W
Reset			0	0			0	0

Bit	15	14	13	12	11	10	9	8
								IBON
Access								R/W
Reset								0

Bit	7	6	5	4	3	2	1	0
	RUNSTDBY			MODE[2:0]			ENABLE	SWRST
Access	R/W			R/W	R/W	R/W	R/W	R/W
Reset	0			0	0	0	0	0

Bit 30 – DORD Data Order
This bit selects the data order when a character is shifted out from the shift register.
Note: This bit is enable-protected. This bit is not synchronized.

Value	Description
0	MSB is transferred first.
1	LSB is transferred first.

Bit 29 – CPOL Clock Polarity
In combination with the Clock Phase bit (CPHA), this bit determines the SPI transfer mode.
Note: This bit is enable-protected. This bit is not synchronized.

Value	Description
0	SCK is low when idle. The leading edge of a clock cycle is a rising edge, while the trailing edge is a falling edge.
1	SCK is high when idle. The leading edge of a clock cycle is a falling edge, while the trailing edge is a rising edge.

Bit 28 – CPHA Clock Phase
In combination with the Clock Polarity bit (CPOL), this bit determines the SPI transfer mode.
Note: This bit is enable-protected. This bit is not synchronized.

Mode	CPOL	CPHA	Leading Edge	Trailing Edge
0x0	0	0	Rising, sample	Falling, change
0x1	0	1	Rising, change	Falling, sample
0x2	1	0	Falling, sample	Rising, change
0x3	1	1	Falling, change	Rising, sample

Value	Description
0	The data is sampled on a leading SCK edge and changed on a trailing SCK edge.

Value	Description
1	The data is sampled on a trailing SCK edge and changed on a leading SCK edge.

Bits 27:24 – FORM[3:0] Frame Format
This bit field selects the various frame formats supported by the SPI in slave mode. When the 'SPI frame with address' format is selected, the first byte received is checked against the ADDR register.
Note: This bit field is enable-protected. This bit field is not synchronized.

FORM[3:0]	Name	Description
0x0	SPI_FRAME	SPI frame
0x1	-	Reserved
0x2	SPI_FRAME_WITH_ADDR	SPI frame with address
0x3-0xF	-	Reserved

Bits 21:20 – DIPO[1:0] Data In Pinout
These bits define the data in (DI) pad configurations.
In master operation, DI is MISO.
In slave operation, DI is MOSI.
Note: This bit field is enable-protected. This bit field is not synchronized.

DIPO[1:0]	Name	Description
0x0	PAD[0]	SERCOM PAD[0] is used as data input
0x1	PAD[1]	SERCOM PAD[1] is used as data input
0x2	PAD[2]	SERCOM PAD[2] is used as data input
0x3	PAD[3]	SERCOM PAD[3] is used as data input

Bits 17:16 – DOPO[1:0] Data Out Pinout
This bit defines the available pad configurations for data out (DO) and the serial clock (SCK). In slave operation, the slave select line ($\overline{SS}$) is either controlled by DOPO when CTRLB.MSSEN = 1 or by a GPIO driven by the application when CTRLB.MSSEN = 0.
In master operation, DO is MOSI.
In slave operation, DO is MISO.
Note: This bit field is enable-protected. This bit field is not synchronized.

DOPO	DO	SCK	Slave $\overline{SS}$	Master $\overline{SS}$
0x0	PAD[0]	PAD[1]	PAD[2]	PAD[2] when CTRLB.MSSEN = 1, else any GPIO configured by the application
0x1	PAD[2]	PAD[3]	PAD[1]	PAD[1] when CTRLB.MSSEN = 1, else any GPIO configured by the application
0x2	PAD[3]	PAD[1]	PAD[2]	PAD[2] when CTRLB.MSSEN = 1, else any GPIO configured by the application
0x3	PAD[0]	PAD[3]	PAD[1]	PAD[1] when CTRLB.MSSEN = 1, else any GPIO configured by the application

Bit 8 – IBON Immediate Buffer Overflow Notification
This bit controls when the buffer overflow status bit (STATUS.BUFOVF) is set when a buffer overflow occurs.
Note: This bit is enable-protected. This bit is not synchronized.

Value	Description
0	STATUS.BUFOVF is set when it occurs in the data stream.
1	STATUS.BUFOVF is set immediately upon buffer overflow.

Bit 7 – RUNSTDBY Run In Standby
This bit defines the functionality in standby sleep mode.
Note: This bit is enable-protected. This bit is not synchronized.

RUNSTDBY	Slave	Master
0x0	Disabled. All reception is dropped, including the ongoing transaction.	Generic clock is disabled when ongoing transaction is finished. All interrupts can wake up the device.
0x1	Ongoing transaction continues, wake on Receive Complete interrupt.	Generic clock is enabled while in sleep modes. All interrupts can wake up the device.

Bits 4:2 – MODE[2:0] Operating Mode
These bits must be written to 0x2 or 0x3 to select the SPI serial communication interface of the SERCOM.
0x2: SPI slave operation
0x3: SPI master operation
Note: This bit field is enable-protected. This bit field is not synchronized.

Bit 1 – ENABLE Enable
Notes:

1. This bit is write-synchronized: SYNCBUSY.ENABLE must be checked to ensure the CTRLA.ENABLE synchronization is complete.
2. This bit is not enable-protected.

Value	Description
0	The peripheral is disabled or being disabled.
1	The peripheral is enabled or being enabled.

Bit 0 – SWRST Software Reset
Writing '0' to this bit has no effect.
Writing '1' to this bit resets all registers in the SERCOM, except DBGCTRL, to their initial state, and the SERCOM will be disabled.
Writing "1' to CTRL.SWRST will always take precedence, meaning that all other writes in the same write-operation will be discarded. Any register write access during the ongoing reset will result in an APB error. Reading any register will return the reset value of the register.
Notes:

1. This bit is write-synchronized: SYNCBUSY.SWRST must be checked to ensure the CTRLA.SWRST synchronization is complete.
2. This bit is not enable-protected.

Value	Description
0	There is no reset operation ongoing.
1	The reset operation is ongoing.

31.7.2 Control B

Name: CTRLB
Offset: 0x04
Reset: 0x00000000
Property: PAC Write-Protection, Enable-Protected Bits, Write-Synchronized Bits

Bit	31	30	29	28	27	26	25	24
Access								
Reset								

Bit	23	22	21	20	19	18	17	16
							RXEN	
Access							R/W	
Reset							0	

Bit	15	14	13	12	11	10	9	8
	AMODE[1:0]		MSSEN				SSDE	
Access	R/W	R/W	R/W				R/W	
Reset	0	0	0				0	

Bit	7	6	5	4	3	2	1	0
		PLOADEN				CHSIZE[2:0]		
Access		R/W				R/W	R/W	R/W
Reset		0				0	0	0

Bit 17 – RXEN Receiver Enable
Writing '0' to this bit will disable the SPI receiver immediately. The receive buffer will be flushed, data from ongoing receptions will be lost and STATUS.BUFOVF will be cleared.
Writing '1' to CTRLB.RXEN when the SPI is disabled will set CTRLB.RXEN immediately. When the SPI is enabled, CTRLB.RXEN will be cleared, SYNCBUSY.CTRLB will be set and remain set until the receiver is enabled. When the receiver is enabled CTRLB.RXEN will read back as '1'.
Writing '1' to CTRLB.RXEN when the SPI is enabled will set SYNCBUSY.CTRLB, which will remain set until the receiver is enabled, and CTRLB.RXEN will read back as '1'.
This bit is not enable-protected.

Value	Description
0	The receiver is disabled or being enabled.
1	The receiver is enabled or it will be enabled when SPI is enabled.

Bits 15:14 – AMODE[1:0] Address Mode
These bits set the slave addressing mode when the frame format (CTRLA.FORM) with address is used. They are unused in master mode.
Note: This bit field is enable-protected. This bit field is not synchronized.

AMODE[1:0]	Name	Description
0x0	MASK	ADDRMASK is used as a mask to the ADDR register
0x1	2ADDRS	The slave responds to the two unique addresses in ADDR and ADDRMASK
0x2	RANGE	The slave responds to the range of addresses between and including ADDR and ADDRMASK. ADDR is the upper limit
0x3	-	Reserved

Bit 13 – MSSEN Master Slave Select Enable
This bit enables hardware slave select ($\overline{SS}$) control.
Note: This bit is enable-protected. This bit is not synchronized.

Value	Description
0	Hardware $\overline{SS}$ control is disabled.
1	Hardware $\overline{SS}$ control is enabled.

Bit 9 – SSDE Slave Select Low Detect Enable
This bit enables wake up when the slave select ($\overline{SS}$) pin transitions from high to low.
Note: This bit is enable-protected. This bit is not synchronized.

Value	Description
0	$\overline{SS}$ low detector is disabled.
1	$\overline{SS}$ low detector is enabled.

Bit 6 – PLOADEN Slave Data Preload Enable
Setting this bit will enable preloading of the slave shift register when there is no transfer in progress. If the $\overline{SS}$ line is high when DATA is written, it will be transferred immediately to the shift register.
The Preload function should not be used if the Master cannot maintain the /SS low until transmission is complete.
Note: This bit is enable-protected. This bit is not synchronized.

Bits 2:0 – CHSIZE[2:0] Character Size
Note: This bit field is enable-protected. This bit field is not synchronized.

CHSIZE[2:0]	Name	Description
0x0	8BIT	8 bits
0x1	9BIT	9 bits
0x2-0x7	-	Reserved

31.7.3 Baud Rate

Name: BAUD
Offset: 0x0C
Reset: 0x00
Property: PAC Write-Protection, Enable-Protected

Bit	7	6	5	4	3	2	1	0
	BAUD[7:0]							
Access	R/W	R/W	R/W	R/W	R/W	R/W	R/W	R/W
Reset	0	0	0	0	0	0	0	0

Bits 7:0 – BAUD[7:0] Baud Register
These bits control the clock generation, as described in the SERCOM Clock Generation – Baud-Rate Generator.

31.7.4 Interrupt Enable Clear

Name: INTENCLR
Offset: 0x14
Reset: 0x00
Property: PAC Write-Protection

This register allows the user to disable an interrupt without read-modify-write operation. Changes in this register will also be reflected in the Interrupt Enable Set register (INTENSET).

Bit	7	6	5	4	3	2	1	0
	ERROR				SSL	RXC	TXC	DRE
Access	R/W				R/W	R/W	R/W	R/W
Reset	0				0	0	0	0

Bit 7 – ERROR Error Interrupt Enable
Writing '0' to this bit has no effect.
Writing '1' to this bit will clear the Error Interrupt Enable bit, which disables the Error interrupt.

Value	Description
0	Error interrupt is disabled.
1	Error interrupt is enabled.

Bit 3 – SSL Slave Select Low Interrupt Enable
Writing '0' to this bit has no effect.
Writing '1' to this bit will clear the Slave Select Low Interrupt Enable bit, which disables the Slave Select Low interrupt.

Value	Description
0	Slave Select Low interrupt is disabled.
1	Slave Select Low interrupt is enabled.

Bit 2 – RXC Receive Complete Interrupt Enable
Writing '0' to this bit has no effect.
Writing '1' to this bit will clear the Receive Complete Interrupt Enable bit, which disables the Receive Complete interrupt.

Value	Description
0	Receive Complete interrupt is disabled.
1	Receive Complete interrupt is enabled.

Bit 1 – TXC Transmit Complete Interrupt Enable
Writing '0' to this bit has no effect.
Writing '1' to this bit will clear the Transmit Complete Interrupt Enable bit, which disable the Transmit Complete interrupt.

Value	Description
0	Transmit Complete interrupt is disabled.
1	Transmit Complete interrupt is enabled.

Bit 0 – DRE Data Register Empty Interrupt Enable
Writing '0' to this bit has no effect.
Writing '1' to this bit will clear the Data Register Empty Interrupt Enable bit, which disables the Data Register Empty interrupt.

Value	Description
0	Data Register Empty interrupt is disabled.
1	Data Register Empty interrupt is enabled.

31.7.5 Interrupt Enable Set

Name: INTENSET
Offset: 0x16
Reset: 0x00
Property: PAC Write-Protection

This register allows the user to disable an interrupt without read-modify-write operation. Changes in this register will also be reflected in the Interrupt Enable Clear register (INTENCLR).

Bit	7	6	5	4	3	2	1	0
	ERROR				SSL	RXC	TXC	DRE
Access	R/W				R/W	R/W	R/W	R/W
Reset	0				0	0	0	0

Bit 7 – ERROR Error Interrupt Enable
Writing '0' to this bit has no effect.
Writing '1' to this bit will set the Error Interrupt Enable bit, which enables the Error interrupt.

Value	Description
0	Error interrupt is disabled.
1	Error interrupt is enabled.

Bit 3 – SSL Slave Select Low Interrupt Enable
Writing '0' to this bit has no effect.
Writing '1' to this bit will set the Slave Select Low Interrupt Enable bit, which enables the Slave Select Low interrupt.

Value	Description
0	Slave Select Low interrupt is disabled.
1	Slave Select Low interrupt is enabled.

Bit 2 – RXC Receive Complete Interrupt Enable
Writing '0' to this bit has no effect.
Writing '1' to this bit will set the Receive Complete Interrupt Enable bit, which enables the Receive Complete interrupt.

Value	Description
0	Receive Complete interrupt is disabled.
1	Receive Complete interrupt is enabled.

Bit 1 – TXC Transmit Complete Interrupt Enable
Writing '0' to this bit has no effect.
Writing '1' to this bit will set the Transmit Complete Interrupt Enable bit, which enables the Transmit Complete interrupt.

Value	Description
0	Transmit Complete interrupt is disabled.
1	Transmit Complete interrupt is enabled.

Bit 0 – DRE Data Register Empty Interrupt Enable
Writing '0' to this bit has no effect.
Writing '1' to this bit will set the Data Register Empty Interrupt Enable bit, which enables the Data Register Empty interrupt.

Value	Description
0	Data Register Empty interrupt is disabled.
1	Data Register Empty interrupt is enabled.

31.7.6 Interrupt Flag Status and Clear

Name: INTFLAG
Offset: 0x18
Reset: 0x00
Property: -

Bit	7	6	5	4	3	2	1	0
	ERROR				SSL	RXC	TXC	DRE
Access	R/W				R/W	R	R/W	R
Reset	0				0	0	0	0

Bit 7 – ERROR Error
This flag is cleared by writing '1' to it.
This bit is set when any error is detected. Errors that will set this flag have corresponding status flags in the STATUS register. The BUFOVF error will set this interrupt flag.
Writing '0' to this bit has no effect.
Writing '1' to this bit will clear the flag.

Bit 3 – SSL Slave Select Low
This flag is cleared by writing '1' to it.
This bit is set when a high to low transition is detected on the _SS pin in slave mode and Slave Select Low Detect (CTRLB.SSDE) is enabled.
Writing '0' to this bit has no effect.
Writing '1' to this bit will clear the flag.

Bit 2 – RXC Receive Complete
This flag is cleared by reading the Data (DATA) register or by disabling the receiver.
This flag is set when there are unread data in the receive buffer. If address matching is enabled, the first data received in a transaction will be an address.
Writing '0' to this bit has no effect.
Writing '1' to this bit has no effect.

Bit 1 – TXC Transmit Complete
This flag is cleared by writing '1' to it or by writing new data to DATA.
In master mode, this flag is set when the data have been shifted out and there are no new data in DATA.
In slave mode, this flag is set when the _SS pin is pulled high. If address matching is enabled, this flag is only set if the transaction was initiated with an address match.
Writing '0' to this bit has no effect.
Writing '1' to this bit will clear the flag.

Bit 0 – DRE Data Register Empty
This flag is cleared by writing new data to DATA.
This flag is set when DATA is empty and ready for new data to transmit.
Writing '0' to this bit has no effect.
Writing '1' to this bit has no effect.

31.7.7 Status

Name: STATUS
Offset: 0x1A
Reset: 0x0000
Property: –

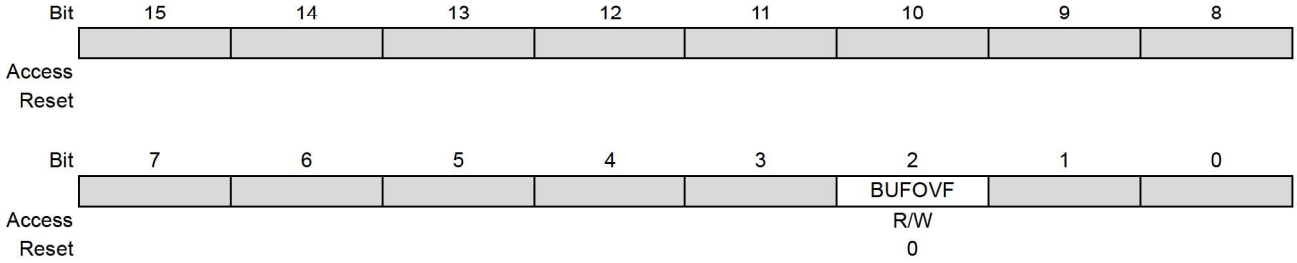

Bit 2 – BUFOVF Buffer Overflow
Reading this bit before reading DATA will indicate the error status of the next character to be read.
This bit is cleared by writing '1' to the bit or by disabling the receiver.
This bit is set when a buffer overflow condition is detected. See also CTRLA.IBON for overflow handling.
When set, the corresponding RxDATA will be zero.
Writing '0' to this bit has no effect.
Writing '1' to this bit will clear it.

Value	Description
0	No Buffer Overflow has occurred.
1	A Buffer Overflow has occurred.

31.7.8 Synchronization Busy

Name: SYNCBUSY
Offset: 0x1C
Reset: 0x00000000
Property: -

Bit	31	30	29	28	27	26	25	24
Access								
Reset								

Bit	23	22	21	20	19	18	17	16
Access								
Reset								

Bit	15	14	13	12	11	10	9	8
Access								
Reset								

Bit	7	6	5	4	3	2	1	0
						CTRLB	ENABLE	SWRST
Access						R	R	R
Reset						0	0	0

Bit 2 – CTRLB CTRLB Synchronization Busy
Writing to the CTRLB when the SERCOM is enabled requires synchronization. Ongoing synchronization is indicated by SYNCBUSY.CTRLB=1 until synchronization is complete. If CTRLB is written while SYNCBUSY.CTRLB=1, an APB error will be generated.

Value	Description
0	CTRLB synchronization is not busy.
1	CTRLB synchronization is busy.

Bit 1 – ENABLE SERCOM Enable Synchronization Busy
Enabling and disabling the SERCOM (CTRLA.ENABLE) requires synchronization. Ongoing synchronization is indicated by SYNCBUSY.ENABLE=1 until synchronization is complete.

Value	Description
0	Enable synchronization is not busy.
1	Enable synchronization is busy.

Bit 0 – SWRST Software Reset Synchronization Busy
Resetting the SERCOM (CTRLA.SWRST) requires synchronization. Ongoing synchronization is indicated by SYNCBUSY.SWRST=1 until synchronization is complete.

Value	Description
0	SWRST synchronization is not busy.
1	SWRST synchronization is busy.

31.7.9 Address

Name: ADDR
Offset: 0x24
Reset: 0x00000000
Property: PAC Write-Protection, Enable-Protected

Bit	31	30	29	28	27	26	25	24
Access								
Reset								

Bit	23	22	21	20	19	18	17	16
	ADDRMASK[7:0]							
Access	R/W	R/W	R/W	R/W	R/W	R/W	R/W	R/W
Reset	0	0	0	0	0	0	0	0

Bit	15	14	13	12	11	10	9	8
Access								
Reset								

Bit	7	6	5	4	3	2	1	0
	ADDR[7:0]							
Access	R/W	R/W	R/W	R/W	R/W	R/W	R/W	R/W
Reset	0	0	0	0	0	0	0	0

Bits 23:16 – ADDRMASK[7:0] Address Mask
These bits hold the address mask when the transaction format with address is used (CTRLA.FORM, CTRLB.AMODE).

Bits 7:0 – ADDR[7:0] Address
These bits hold the address when the transaction format with address is used (CTRLA.FORM, CTRLB.AMODE).

31.7.10 Data

Name: DATA
Offset: 0x28
Reset: 0x0000
Property: –

Bit	15	14	13	12	11	10	9	8
								DATA[8]
Access								R/W
Reset								0

Bit	7	6	5	4	3	2	1	0
	DATA[7:0]							
Access	R/W	R/W	R/W	R/W	R/W	R/W	R/W	R/W
Reset	0	0	0	0	0	0	0	0

Bits 8:0 – DATA[8:0] Data
Reading these bits will return the contents of the receive data buffer. The register should be read only when the Receive Complete Interrupt Flag bit in the Interrupt Flag Status and Clear register (INTFLAG.RXC) is set.
Writing these bits will write the transmit data buffer. This register should be written only when the Data Register Empty Interrupt Flag bit in the Interrupt Flag Status and Clear register (INTFLAG.DRE) is set.

31.7.11 Debug Control

Name: DBGCTRL
Offset: 0x30
Reset: 0x00
Property: PAC Write-Protection

Bit	7	6	5	4	3	2	1	0
								DBGSTOP
Access								R/W
Reset								0

Bit 0 – DBGSTOP Debug Stop Mode
This bit controls the functionality when the CPU is halted by an external debugger.
This bit will be reset after a software system reset.

Value	Description
0	The baud-rate generator continues normal operation when the CPU is halted by an external debugger.
1	The baud-rate generator is halted when the CPU is halted by an external debugger.

32. SERCOM Inter-Integrated Circuit (SERCOM I²C)

32.1 Overview

The inter-integrated circuit (I²C) interface is one of the available modes in the Serial Communication Interface (SERCOM)..

The I²C interface uses the SERCOM transmitter and receiver configured as shown in Figure 32-1. Labels in capital letters are registers accessible by the CPU, while lowercase labels are internal to the SERCOM.

A SERCOM instance can be configured to be either an I²C master or an I²C slave. Both master and slave have an interface containing a shift register, a transmit buffer and a receive buffer. In addition, the I²C master uses the SERCOM baud-rate generator, while the I²C slave uses the SERCOM address match logic.

32.2 Features

SERCOM I²C includes the following features:

- Master or slave operation
- Can be used with DMA
- Philips I²C compatible
- SMBus™ compatible
- PMBus compatible
- Support of 100 kHz and 400 kHz, 1 MHz and 3.4 MHz I²C mode
- 4-Wire operation supported
- Physical interface includes:
  - Slew-rate limited outputs
  - Filtered inputs
- Slave operation:
  - Operation in all sleep modes
  - Wake-up on address match
  - 7-bit Address match in hardware for:
    - Unique address and/or 7-bit general call address
    - Address range
    - Two unique addresses can be used with DMA

32.3 Block Diagram

Figure 32-1. I²C Single-Master Single-Slave Interconnection

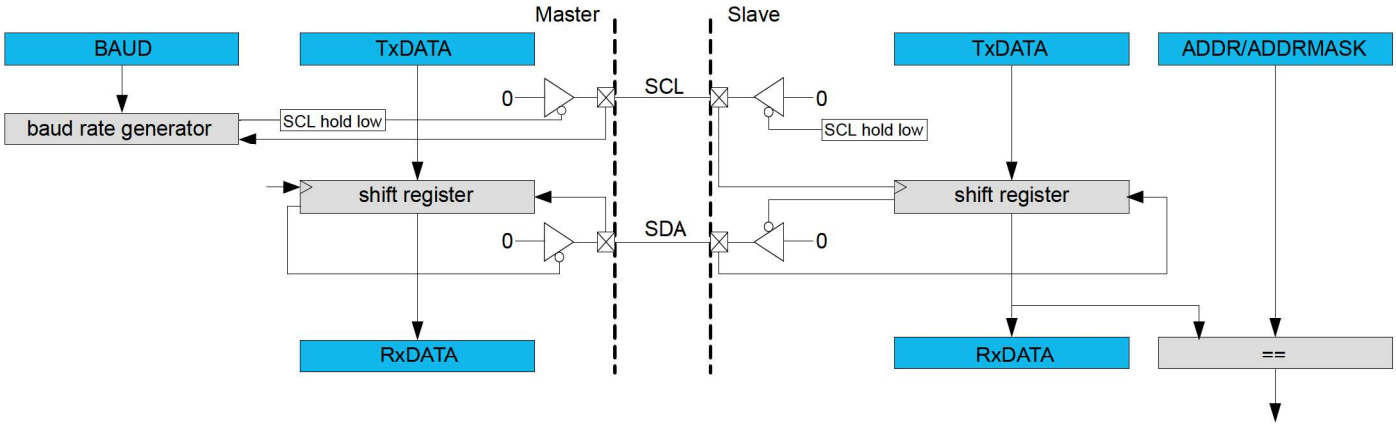

32.4 Signal Description

Signal Name	Type	Description
PAD[0]	Digital I/O	SDA
PAD[1]	Digital I/O	SCL
PAD[2]	Digital I/O	SDA_OUT (4-wire operation)
PAD[3]	Digital I/O	SCL_OUT (4-wire operation)

One signal can be mapped on several pins.

All SERCOM I²C pins support the Fast Mode frequency. The High Speed frequency is only supported by the following pins:

Table 32-1. SERCOM Pins Supporting I²C High Speed Frequency

Package	Pins Supporting I²C
32-pin	PA08, PA09, PA16, PA17, PA22, PA23
48-pin	PA08, PA09, PA12, PA13, PA16, PA17, PA22, PA23

Refer to the Pinout chapter for more information.

32.5 Peripheral Dependencies

Refer to section 29.5 SERCOM Peripheral Dependencies.

32.6 Functional Description

32.6.1 Principle of Operation

The I²C interface uses two physical lines for communication:

- Serial Data Line (SDA) for data transfer
- Serial Clock Line (SCL) for the bus clock

A transaction starts with the I²C master sending the start condition, followed by a 7-bit address and a direction bit (read or write to/from the slave).

The addressed I²C slave will then acknowledge (ACK) the address, and data packet transactions can begin. Every 9-bit data packet consists of 8 data bits followed by a one-bit reply indicating whether the data was acknowledged or not.

If a data packet is not acknowledged (NACK), whether by the I²C slave or master, the I²C master takes action by either terminating the transaction by sending the stop condition, or by sending a repeated start to transfer more data.

The figure below illustrates the possible transaction formats and Transaction Diagram Symbols explains the transaction symbols. These symbols will be used in the following descriptions.

Figure 32-2. Transaction Diagram Symbols

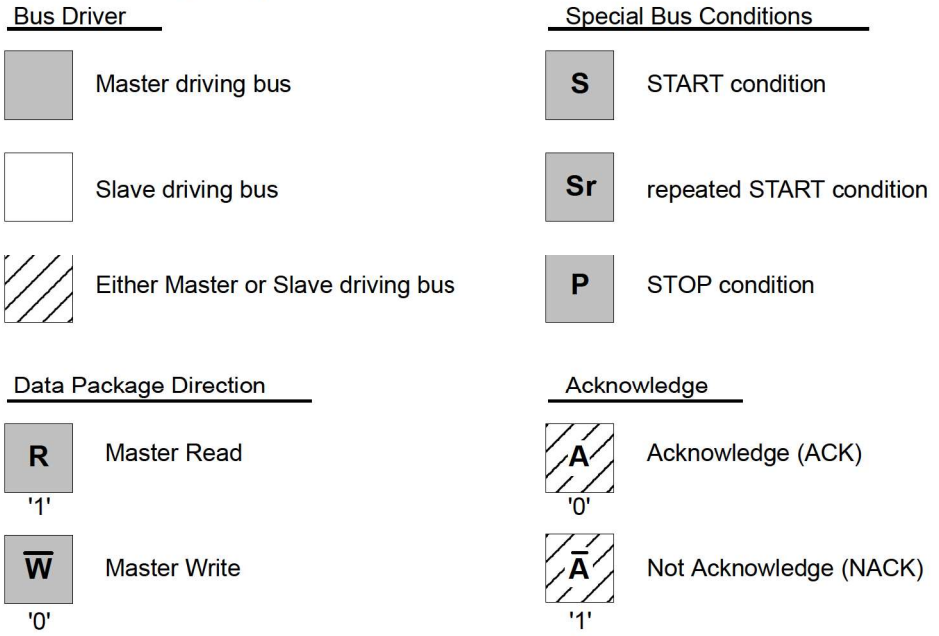

Figure 32-3. Basic I²C Transaction Diagram

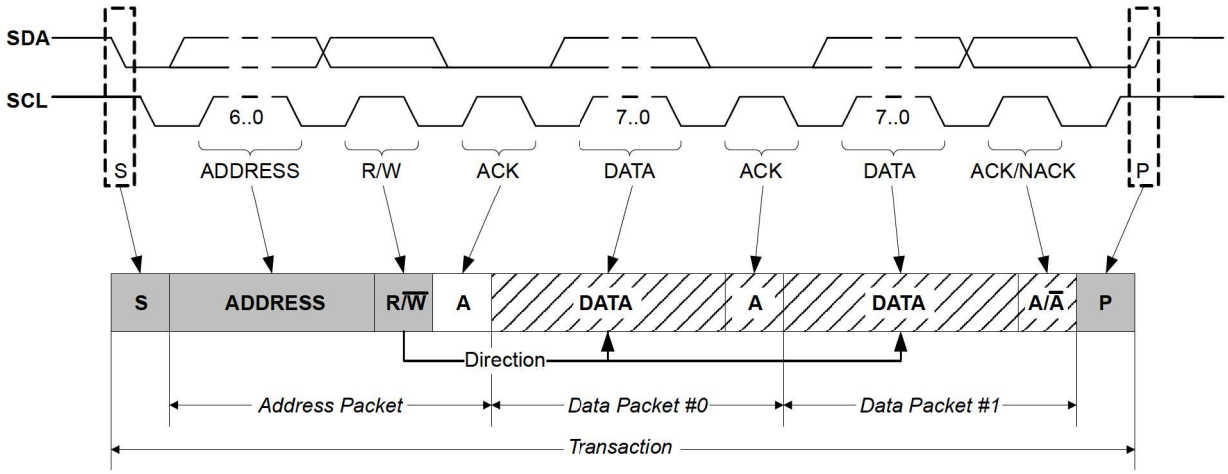

32.6.2 Basic Operation

32.6.2.1 Initialization

The following registers are enable-protected, meaning they can be written only when the I²C interface is disabled (CTRLA.ENABLE is '0'):

- Control A register (CTRLA), except Enable (CTRLA.ENABLE) and Software Reset (CTRLA.SWRST) bits
- Control B register (CTRLB), except Acknowledge Action (CTRLB.ACKACT) and Command (CTRLB.CMD) bits
- Baud register (BAUD)
- Address register (ADDR) in slave operation.

When the I^2C is enabled or is being enabled (CTRLA.ENABLE=1), writing to these registers will be discarded. If the I^2C is being disabled, writing to these registers will be completed after the disabling.

Enable-protection is denoted by the "Enable-Protection" property in the register description.

Before I^2C is enabled it must be configured by the following these steps:

1. Select I^2C Master or Slave mode by writing 0x4 (Slave mode) or 0x5 (Master mode) to the Operating Mode bits in the CTRLA register (CTRLA.MODE).
2. If required, select the SDA Hold Time value in the CTRLA register (CTRLA.SDAHOLD).
3. If required, enable smart operation by setting the Smart Mode Enable bit in the CTRLB register (CTRLB.SMEN).
4. If required, enable SCL low time-out by setting the SCL Low Time-Out bit in the Control A register (CTRLA.LOWTOUTEN).
5. In Master mode:
   5.1. Select the inactive bus time-out in the Inactive Time-Out bit group in the CTRLA register (CTRLA.INACTOUT).
   5.2. Write the Baud Rate register (BAUD) to generate the desired baud rate.

   In Slave mode:
   5.1. Configure the address match configuration by writing the Address Mode value in the CTRLB register (CTRLB.AMODE).
   5.2. Set the Address and Address Mask value in the Address register (ADDR.ADDR and ADDR.ADDRMASK) according to the address configuration.

32.6.2.2 Enabling, Disabling, and Resetting

This peripheral is enabled by writing '1' to the Enable bit in the Control A register (CTRLA.ENABLE), and disabled by writing '0' to it.

Writing ‘1’ to the Software Reset bit in the Control A register (CTRLA.SWRST) will reset all registers of this peripheral to their initial states, except the DBGCTRL register, only when CRTLA.ENABLE is '1'.

32.6.2.3 I^2C Bus State Logic

The bus state logic includes several logic blocks that continuously monitor the activity on the I^2C bus lines in all sleep modes with running GCLK_SERCOM_x clocks. The start and stop detectors and the bit counter are all essential in the process of determining the current bus state. The bus state is determined according to Bus State Diagram. Software can get the current bus state by reading the Master Bus State bits in the Status register (STATUS.BUSSTATE). The value of STATUS.BUSSTATE in the figure is shown in binary.

Figure 32-4. Bus State Diagram

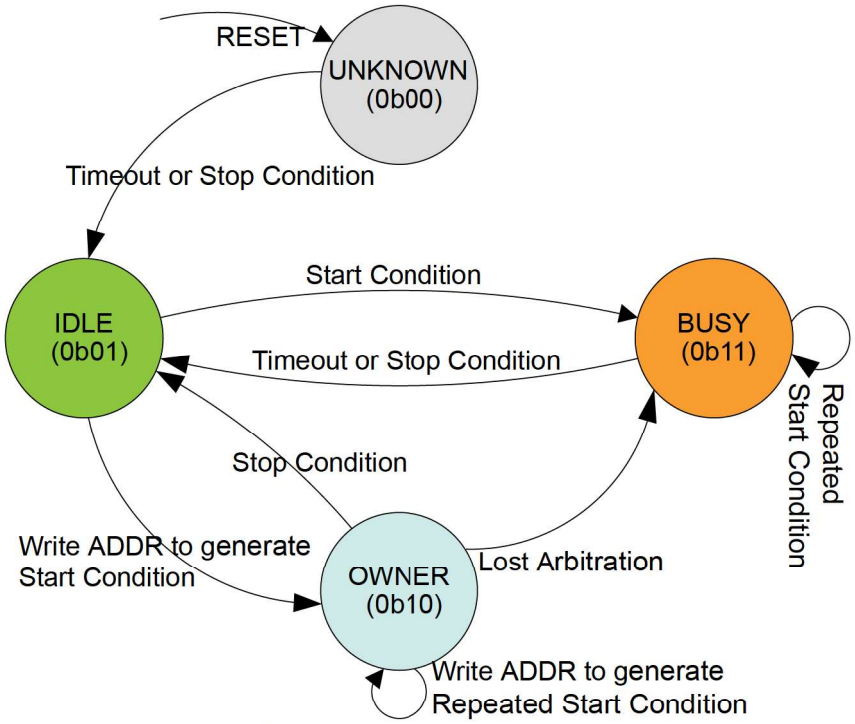

The bus state machine is active when the I²C master is enabled.

After the I²C master has been enabled, the bus state is UNKNOWN (0b00). From the UNKNOWN state, the bus will transition to IDLE (0b01) by either:

- Forcing by writing 0b01 to STATUS.BUSSTATE
- A stop condition is detected on the bus
- If the inactive bus time-out is configured for SMBus compatibility (CTRLA.INACTOUT) and a time-out occurs.

Note: Once a known bus state is established, the bus state logic will not re-enter the UNKNOWN state.

When the bus is IDLE it is ready for a new transaction. If a start condition is issued on the bus by another I²C master in a multi-master setup, the bus becomes BUSY (0b11). The bus will re-enter IDLE either when a stop condition is detected, or when a time-out occurs (inactive bus time-out needs to be configured).

If a start condition is generated internally by writing the Address bit group in the Address register (ADDR.ADDR) while IDLE, the OWNER state (0b10) is entered. If the complete transaction was performed without interference, i.e., arbitration was not lost, the I²C master can issue a stop condition, which will change the bus state back to IDLE.

However, if a packet collision is detected while in OWNER state, the arbitration is assumed lost and the bus state becomes BUSY until a stop condition is detected. A repeated start condition will change the bus state only if arbitration is lost while issuing a repeated start.

Note: Violating the protocol may cause the I²C to hang. If this happens it is possible to recover from this state by a software reset (CTRLA.SWRST='1').

32.6.2.4 I²C Master Operation

The I²C master is byte-oriented and interrupt based. The number of interrupts generated is kept at a minimum by automatic handling of most incidents. The software driver complexity and code size are reduced by auto-triggering of operations, and smart mode, which can be enabled by the Smart Mode Enable bit in the Control B register (CTRLB.SMEN).

The I²C master has two interrupt strategies.

When SCL Clock Stretch Mode (CTRLA.SCLSM) is '0', SCL is stretched before or after the Acknowledge bit . In this mode the I²C master operates according to Master Behavioral Diagram (SCLSM=0). The circles labeled "M*n*" (M1, M2..) indicate the nodes the bus logic can jump to, based on software or hardware interaction.

This diagram is used as reference for the description of the I²C master operation throughout the document.

Figure 32-5. I²C Master Behavioral Diagram (SCLSM=0)

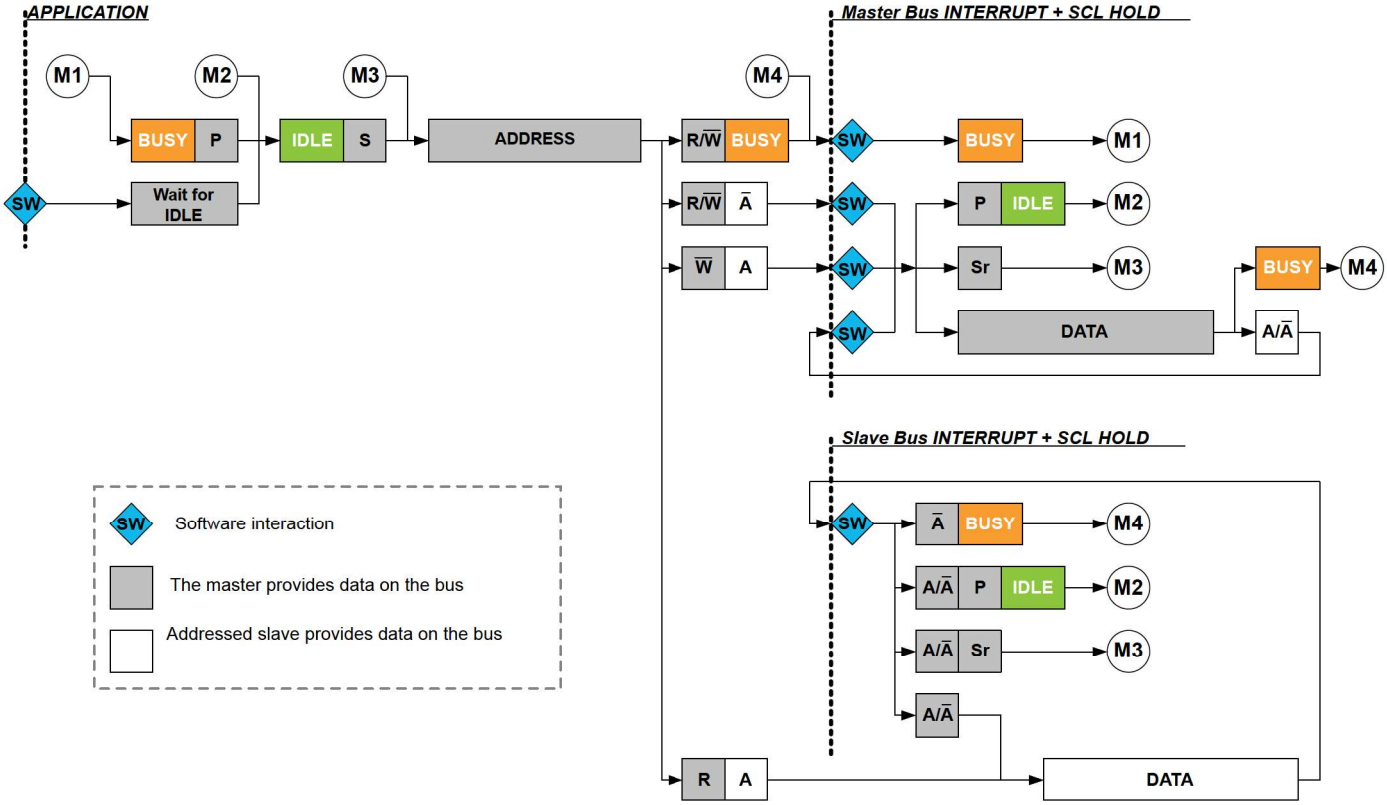

In the second strategy (CTRLA.SCLSM=1), interrupts only occur after the ACK bit, as in Master Behavioral Diagram (SCLSM=1). This strategy can be used when it is not necessary to check DATA before acknowledging.

Note: I²C High-speed (*Hs*) mode requires CTRLA.SCLSM=1.

Figure 32-6. I²C Master Behavioral Diagram (SCLSM=1)

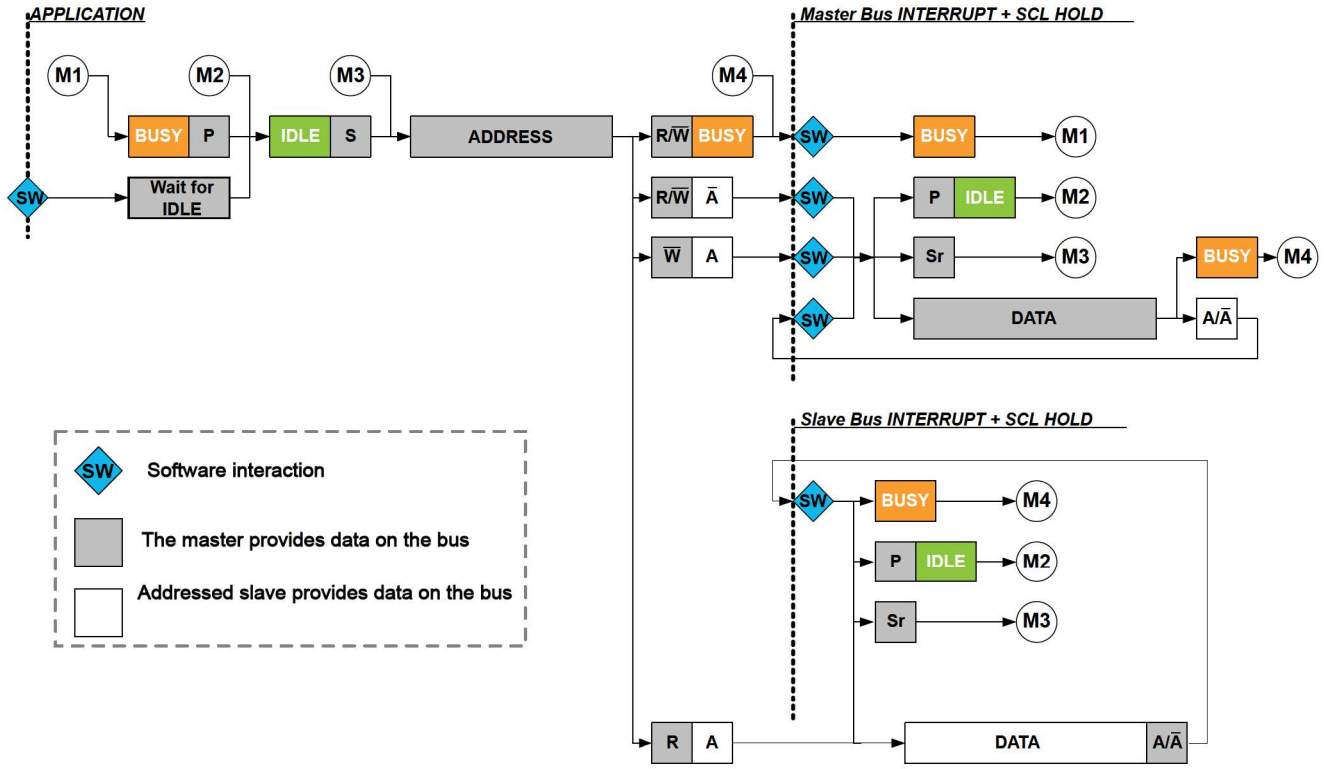

32.6.2.4.1 Master Clock Generation

The SERCOM peripheral supports several I²C bidirectional modes:

- Standard mode (*Sm*) up to 100 kHz
- Fast mode (*Fm*) up to 400 kHz
- Fast mode Plus (*Fm+*) up to 1 MHz
- High-speed mode (*Hs*) up to 3.4 MHz

The Master clock configuration for *Sm, Fm,* and *Fm+* are described in Clock Generation (Standard-Mode, Fast-Mode, and Fast-Mode Plus). For *Hs*, refer to Master Clock Generation (High-Speed Mode).

Clock Generation (Standard-Mode, Fast-Mode, and Fast-Mode Plus)

In I²C *Sm, Fm*, and *Fm+* mode, the Master clock (SCL) frequency is determined as described in this section:

The low (T_{LOW}) and high (T_{HIGH}) times are determined by the Baud Rate register (BAUD), while the rise (T_{RISE}) and fall (T_{FALL}) times are determined by the bus topology. Because of the wired-AND logic of the bus, T_{FALL} will be considered as part of T_{LOW}. Likewise, T_{RISE} will be in a state between T_{LOW} and T_{HIGH} until a high state has been detected.

Figure 32-7. SCL Timing

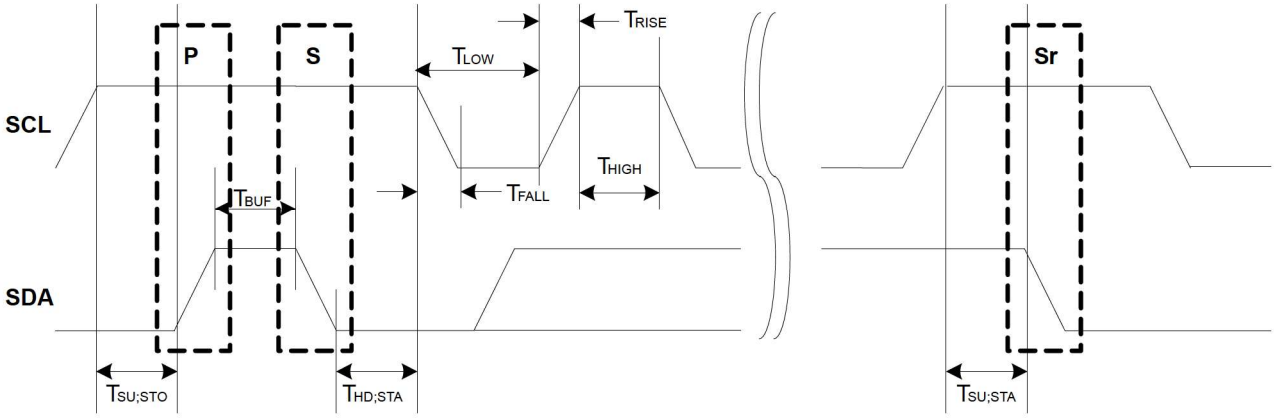

The following parameters are timed using the SCL low time period T_{LOW}. This comes from the Master Baud Rate Low bit group in the Baud Rate register (BAUD.BAUDLOW). When BAUD.BAUDLOW=0, or the Master Baud Rate bit group in the Baud Rate register (BAUD.BAUD) determines it.

- T_{LOW} – Low period of SCL clock
- $T_{SU;STO}$ – Set-up time for stop condition
- T_{BUF} – Bus free time between stop and start conditions
- $T_{HD;STA}$ – Hold time (repeated) start condition
- $T_{SU;STA}$ – Set-up time for repeated start condition
- T_{HIGH} is timed using the SCL high time count from BAUD.BAUD
- T_{RISE} is determined by the bus impedance; for internal pull-ups. Refer to 43. Electrical Characteristics.
- T_{FALL} is determined by the open-drain current limit and bus impedance; can typically be regarded as zero. Refer to 43. Electrical Characteristics for details.

The SCL frequency is given by:

$$f_{\mathrm{SCL}} = \frac{1}{T_{\mathrm{LOW}} + T_{\mathrm{HIGH}} + T_{\mathrm{RISE}}}$$

When BAUD.BAUDLOW is zero, the BAUD.BAUD value is used to time both SCL high and SCL low. In this case the following formula will give the SCL frequency:

$$f_{\mathrm{SCL}} = \frac{f_{\mathrm{GCLK}}}{10 + 2BAUD + f_{\mathrm{GCLK}} \cdot T_{\mathrm{RISE}}}$$

When BAUD.BAUDLOW is non-zero, the following formula determines the SCL frequency:

$$f_{\mathrm{SCL}} = \frac{f_{\mathrm{GCLK}}}{10 + BAUD + BAUDLOW + f_{\mathrm{GCLK}} \cdot T_{\mathrm{RISE}}}$$

The following formulas can determine the SCL T_{LOW} and T_{HIGH} times:

$$T_{\mathrm{LOW}} = \frac{BAUDLOW + 5}{f_{\mathrm{GCLK}}}$$

$$T_{\mathrm{HIGH}} = \frac{BAUD + 5}{f_{\mathrm{GCLK}}}$$

Note: The I^2C standard *Fm+* (Fast-mode plus) requires a nominal high to low SCL ratio of 1:2, and BAUD should be set accordingly. At a minimum, BAUD.BAUD and/or BAUD.BAUDLOW must be non-zero.

Startup Timing The minimum time between SDA transition and SCL rising edge is 6 APB cycles when the DATA register is written in smart mode. If a greater startup time is required due to long rise times, the time between DATA write and IF clear must be controlled by software.
Note: When timing is controlled by user, the Smart Mode cannot be enabled.

Master Clock Generation (High-Speed Mode)

For I²C *Hs* transfers, there is no SCL synchronization. Instead, the SCL frequency is determined by the GCLK_SERCOMx_CORE frequency (f_{GCLK}) and the High-Speed Baud setting in the Baud register (BAUD.HSBAUD). When BAUD.HSBAUDLOW=0, the HSBAUD value will determine both SCL high and SCL low. In this case the following formula determines the SCL frequency.

$$f_{SCL} = \frac{f_{GCLK}}{2 + 2 \cdot HS\,BAUD}$$

When HSBAUDLOW is non-zero, the following formula determines the SCL frequency.

$$f_{SCL} = \frac{f_{GCLK}}{2 + HS\,BAUD + HSBAUDLOW}$$

Note: The I²C standard *Hs* (High-speed) requires a nominal high to low SCL ratio of 1:2, and HSBAUD should be set accordingly. At a minimum, BAUD.HSBAUD and/or BAUD.HSBAUDLOW must be non-zero.

32.6.2.4.2 Transmitting Address Packets

The I²C master starts a bus transaction by writing the I²C slave address to ADDR.ADDR and the direction bit, as described in 32.6.1 Principle of Operation. If the bus is busy, the I²C master will wait until the bus becomes idle before continuing the operation. When the bus is idle, the I²C master will issue a start condition on the bus. The I²C master will then transmit an address packet using the address written to ADDR.ADDR. After the address packet has been transmitted by the I²C master, one of four cases will arise according to arbitration and transfer direction.

Case 1: Arbitration lost or bus error during address packet transmission

If arbitration was lost during transmission of the address packet, the Master on Bus bit in the Interrupt Flag Status and Clear register (INTFLAG.MB) and the Arbitration Lost bit in the Status register (STATUS.ARBLOST) are both set. Serial data output to SDA is disabled, and the SCL is released, which disables clock stretching. In effect the I²C master is no longer allowed to execute any operation on the bus until the bus is idle again. A bus error will behave similarly to the arbitration lost condition. In this case, the MB interrupt flag and Master Bus Error bit in the Status register (STATUS.BUSERR) are both set in addition to STATUS.ARBLOST.

The Master Received Not Acknowledge bit in the Status register (STATUS.RXNACK) will always contain the last successfully received acknowledge or not acknowledge indication.

In this case, software will typically inform the application code of the condition and then clear the interrupt flag before exiting the interrupt routine. No other flags have to be cleared at this moment, because all flags will be cleared automatically the next time the ADDR.ADDR register is written.

Case 2: Address packet transmit complete – No ACK received

If there is no I²C slave device responding to the address packet, then the INTFLAG.MB interrupt flag and STATUS.RXNACK will be set. The clock hold is active at this point, preventing further activity on the bus.

The missing ACK response can indicate that the I²C slave is busy with other tasks or sleeping. Therefore, it is not able to respond. In this event, the next step can be either issuing a stop condition (recommended) or resending the address packet by a repeated start condition. When using SMBus logic, the slave must ACK the address. If there is no response, it means that the slave is not available on the bus.

Case 3: Address packet transmit complete – Write packet, Master on Bus set

If the I²C master receives an acknowledge response from the I²C slave, INTFLAG.MB will be set and STATUS.RXNACK will be cleared. The clock hold is active at this point, preventing further activity on the bus.

In this case, the software implementation becomes highly protocol dependent. Three possible actions can enable the I²C operation to continue:

- Initiate a data transmit operation by writing the data byte to be transmitted into DATA.DATA.
- Transmit a new address packet by writing ADDR.ADDR. A repeated start condition will automatically be inserted before the address packet.
- Issue a stop condition, consequently terminating the transaction.

Case 4: Address packet transmit complete – Read packet, Slave on Bus set

If the I²C master receives an ACK from the I²C slave, the I²C master proceeds to receive the next byte of data from the I²C slave. When the first data byte is received, the Slave on Bus bit in the Interrupt Flag register (INTFLAG.SB)

will be set and STATUS.RXNACK will be cleared. The clock hold is active at this point, preventing further activity on the bus.

In this case, the software implementation becomes highly protocol dependent. Three possible actions can enable the I^2C operation to continue:

- Let the I^2C master continue to read data by acknowledging the data received. ACK can be sent by software, or automatically in smart mode.
- Transmit a new address packet.
- Terminate the transaction by issuing a stop condition.

Note: An ACK or NACK will be automatically transmitted if smart mode is enabled. The Acknowledge Action bit in the Control B register (CTRLB.ACKACT) determines whether ACK or NACK should be sent.

32.6.2.4.3 Transmitting Data Packets

When an address packet with direction Master Write (see Figure 32-3) was transmitted successfully , INTFLAG.MB will be set. The I^2C master will start transmitting data via the I^2C bus by writing to DATA.DATA, and monitor continuously for packet collisions. I

If a collision is detected, the I^2C master will lose arbitration and STATUS.ARBLOST will be set. If the transmit was successful, the I^2C master will receive an ACK bit from the I^2C slave, and STATUS.RXNACK will be cleared. INTFLAG.MB will be set in both cases, regardless of arbitration outcome.

It is recommended to read STATUS.ARBLOST and handle the arbitration lost condition in the beginning of the I^2C Master on Bus interrupt. This can be done as there is no difference between handling address and data packet arbitration.

STATUS.RXNACK must be checked for each data packet transmitted before the next data packet transmission can commence. The I^2C master is not allowed to continue transmitting data packets if a NACK is received from the I^2C slave.

32.6.2.4.4 Receiving Data Packets (SCLSM=0)

When INTFLAG.SB is set, the I^2C master will already have received one data packet. The I^2C master must respond by sending either an ACK or NACK. Sending a NACK may be unsuccessful when arbitration is lost during the transmission. In this case, a lost arbitration will prevent setting INTFLAG.SB. Instead, INTFLAG.MB will indicate a change in arbitration. Handling of lost arbitration is the same as for data bit transmission.

32.6.2.4.5 Receiving Data Packets (SCLSM=1)

When INTFLAG.SB is set, the I^2C master will already have received one data packet and transmitted an ACK or NACK, depending on CTRLB.ACKACT. At this point, CTRLB.ACKACT must be set to the correct value for the next ACK bit, and the transaction can continue by reading DATA and issuing a command if not in the smart mode.

32.6.2.4.6 High-Speed Mode

High-speed transfers are a multi-step process, see High Speed Transfer.

First, a master code (0b00001nnn, where 'nnn' is a unique master code) is transmitted in Full-speed mode, followed by a NACK since no slaveshould acknowledge. Arbitration is performed only during the Full-speed Master Code phase. The master code is transmitted by writing the master code to the address register (ADDR.ADDR) and writing the high-speed bit (ADDR.HS) to '0'.

After the master code and NACK have been transmitted, the master write interrupt will be asserted. In the meanwhile, the slave address can be written to the ADDR.ADDR register together with ADDR.HS=1. Now in High-speed mode, the master will generate a repeated start, followed by the slave address with RW-direction. The bus will remain in High-speed mode until a stop is generated. If a repeated start is desired, the ADDR.HS bit must again be written to '1', along with the new address ADDR.ADDR to be transmitted.

Figure 32-8. High Speed Transfer

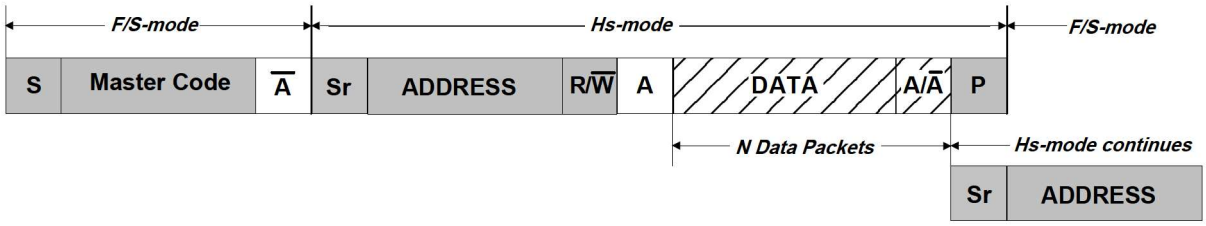

Transmitting in High-speed mode requires the I²C master to be configured in High-speed mode (CTRLA.SPEED=0x2) and the SCL clock stretch mode (CTRLA.SCLSM) bit set to '1'.

32.6.2.4.7 10-Bit Addressing

When 10-bit addressing is enabled by the Ten Bit Addressing Enable bit in the Address register (ADDR.TENBITEN=1) and the Address bit field ADDR.ADDR is written, the two address bytes will be transmitted, see 10-bit Address Transmission for a Read Transaction. The addressed slave acknowledges the two address bytes, and the transaction continues. Regardless of whether the transaction is a read or write, the master must start by sending the 10-bit address with the direction bit (ADDR.ADDR[0]) being zero.

If the master receives a NACK after the first byte, the write interrupt flag will be raised and the STATUS.RXNACK bit will be set. If the first byte is acknowledged by one or more slaves, then the master will proceed to transmit the second address byte and the master will first see the write interrupt flag after the second byte is transmitted. If the transaction direction is read-from-slave, the 10-bit address transmission must be followed by a repeated start and the first 7 bits of the address with the read/write bit equal to '1'.

Figure 32-9. 10-bit Address Transmission for a Read Transaction

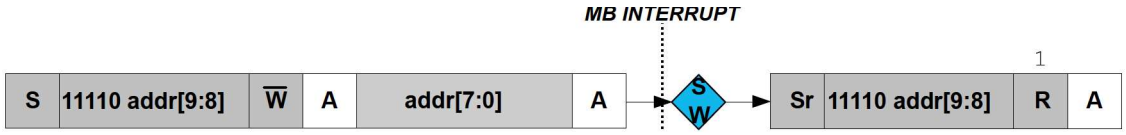

This implies the following procedure for a 10-bit read operation:

1. Write the 10-bit address to ADDR.ADDR[10:1]. ADDR.TENBITEN must be '1', the direction bit (ADDR.ADDR[0]) must be '0' (can be written simultaneously with ADDR).
2. Once the Master on Bus interrupt is asserted, Write ADDR[7:0] register to '11110 `address[9:8]` 1'. ADDR.TENBITEN must be cleared (can be written simultaneously with ADDR).
3. Proceed to transmit data.

32.6.2.5 I²C Slave Operation

The I²C slave is byte-oriented and interrupt-based. The number of interrupts generated is kept at a minimum by automatic handling of most events. The software driver complexity and code size are reduced by auto-triggering of operations, and a special smart mode, which can be enabled by the Smart Mode Enable bit in the Control B register (CTRLB.SMEN).

The I²C slave has two interrupt strategies.

When SCL Stretch Mode bit (CTRLA.SCLSM) is '0', SCL is stretched before or after the acknowledge bit. In this mode, the I²C slave operates according to I²C Slave Behavioral Diagram (SCLSM=0). The circles labelled "S*n*" (S1, S2..) indicate the nodes the bus logic can jump to, based on software or hardware interaction.

This diagram is used as reference for the description of the I²C slave operation throughout the document.

Figure 32-10. I²C Slave Behavioral Diagram (SCLSM=0)

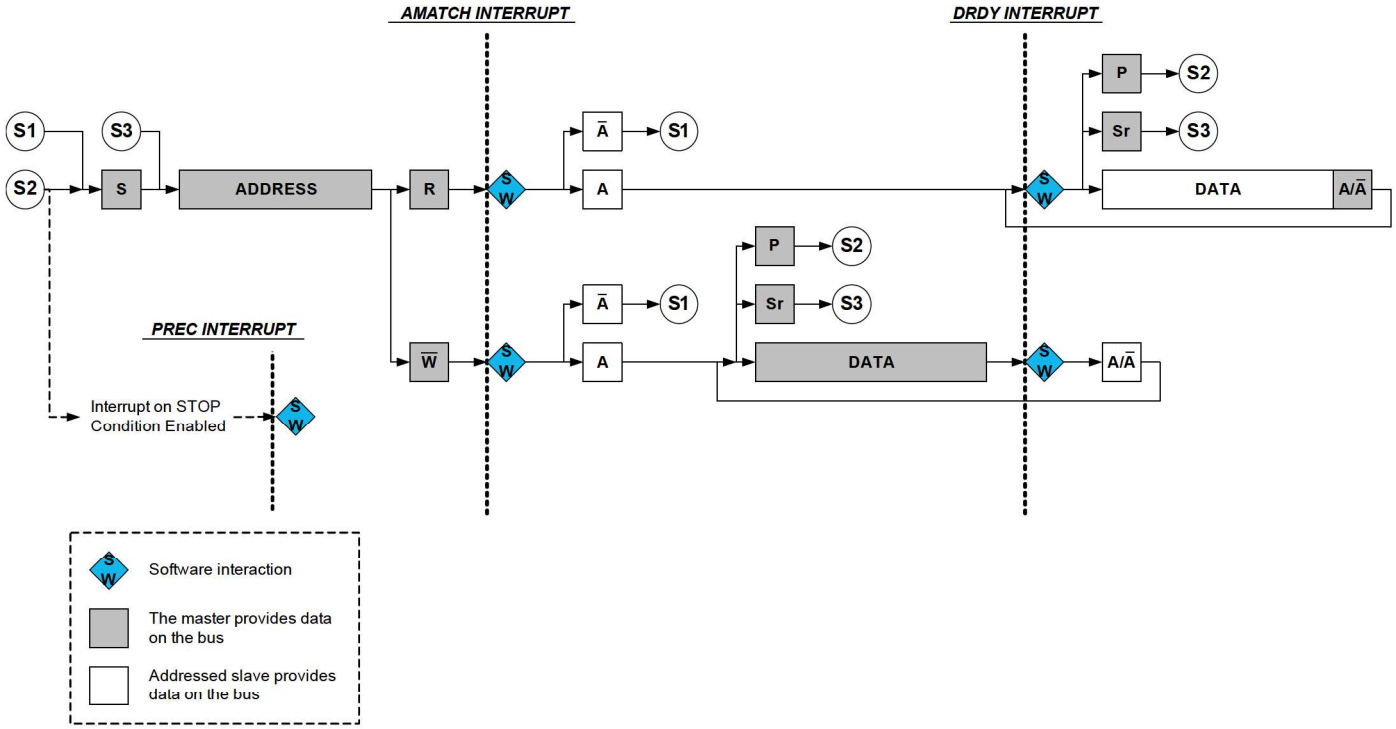

In the second strategy (CTRLA.SCLSM=1), interrupts only occur after the ACK bit is sent as shown in Slave Behavioral Diagram (SCLSM=1). This strategy can be used when it is not necessary to check DATA before acknowledging. For master reads, an address and data interrupt will be issued simultaneously after the address acknowledge. However, for master writes, the first data interrupt will be seen after the first data byte has been received by the slave and the acknowledge bit has been sent to the master.

Note: For I²C High-speed mode (*Hs*), SCLSM=1 is required.

Figure 32-11. I²C Slave Behavioral Diagram (SCLSM=1)

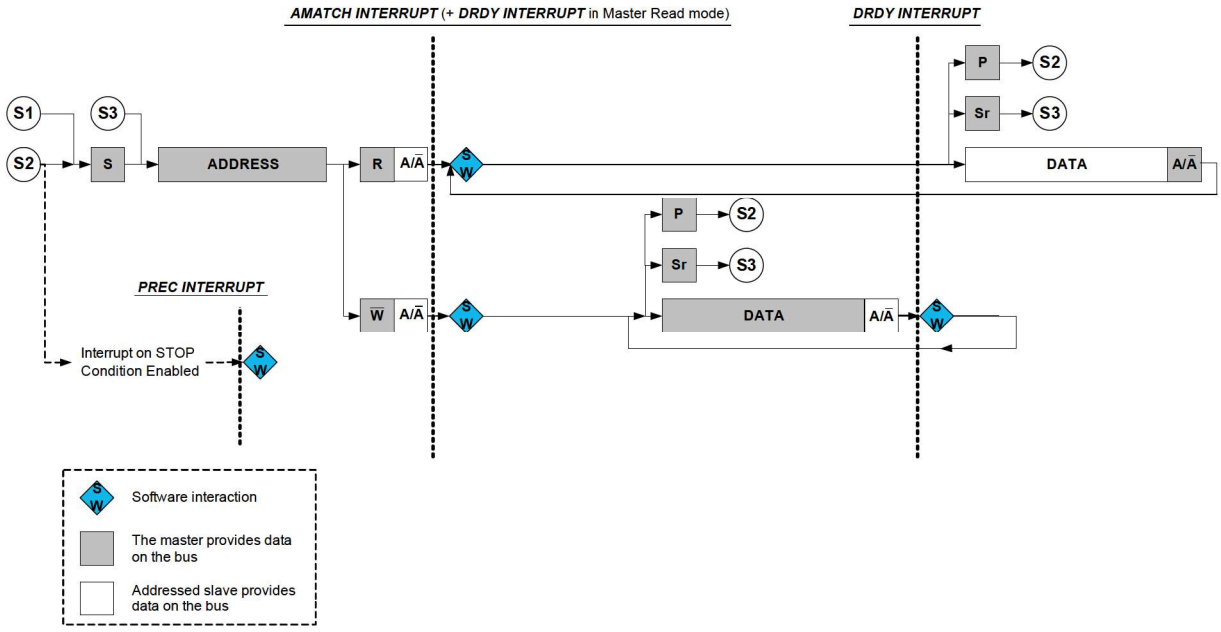

32.6.2.5.1 Receiving Address Packets (SCLSM=0)

When CTRLA.SCLSM=0, the I2C slave stretches the SCL line according to Figure 32-10. When the I²C slave is properly configured, it will wait for a start condition.

When a start condition is detected, the successive address packet will be received and checked by the address match logic. If the received address is not a match, the packet will be rejected, and the I²C slave will wait for a new start condition. If the received address is a match, the Address Match bit in the Interrupt Flag register (INTFLAG.AMATCH) will be set.

SCL will be stretched until the I²C slave clears INTFLAG.AMATCH. As the I²C slave holds the clock by forcing SCL low, the software has unlimited time to respond.

The direction of a transaction is determined by reading the Read / Write Direction bit in the Status register (STATUS.DIR). This bit will be updated only when a valid address packet is received.

If the Transmit Collision bit in the Status register (STATUS.COLL) is set, this indicates that the last packet addressed to the I²C slave had a packet collision. A collision causes the SDA and SCL lines to be released without any notification to software. Therefore, the next AMATCH interrupt is the first indication of the previous packet's collision. Collisions are intended to follow the SMBus Address Resolution Protocol (ARP).

After the address packet has been received from the I²C master, one of two cases will arise based on transfer direction.

Case 1: Address packet accepted – Read flag set

The STATUS.DIR bit is '1', indicating an I²C master read operation. The SCL line is forced low, stretching the bus clock. If an ACK is sent, I²C slave hardware will set the Data Ready bit in the Interrupt Flag register (INTFLAG.DRDY), indicating data are needed for transmit. If a NACK is sent, the I²C slave will wait for a new start condition and address match.

Typically, software will immediately acknowledge the address packet by sending an ACK/NACK bit. The I²C slave Command bit field in the Control B register (CTRLB.CMD) can be written to '0x3' for both read and write operations as the command execution is dependent on the STATUS.DIR bit. Writing '1' to INTFLAG.AMATCH will also cause an ACK/NACK to be sent corresponding to the CTRLB.ACKACT bit.

Case 2: Address packet accepted – Write flag set

The STATUS.DIR bit is cleared, indicating an I²C master write operation. The SCL line is forced low, stretching the bus clock. If an ACK is sent, the I²C slave will wait for data to be received. Data, repeated start or stop can be received.

If a NACK is sent, the I²C slave will wait for a new start condition and address match. Typically, software will immediately acknowledge the address packet by sending an ACK/NACK. The I²C slave command CTRLB.CMD = 3 can be used for both read and write operation as the command execution is dependent on STATUS.DIR.

Writing '1' to INTFLAG.AMATCH will also cause an ACK/NACK to be sent corresponding to the CTRLB.ACKACT bit.

32.6.2.5.2 Receiving Address Packets (SCLSM=1)

When SCLSM=1, the I²C slave will stretch the SCL line only after an ACK, see Slave Behavioral Diagram (SCLSM=1). When the I²C slave is properly configured, it will wait for a start condition to be detected.

When a start condition is detected, the successive address packet will be received and checked by the address match logic.

If the received address is not a match, the packet will be rejected and the I²C slave will wait for a new start condition.

If the address matches, the acknowledge action as configured by the Acknowledge Action bit Control B register (CTRLB.ACKACT) will be sent and the Address Match bit in the Interrupt Flag register (INTFLAG.AMATCH) is set. SCL will be stretched until the I²C slave clears INTFLAG.AMATCH. As the I²C slave holds the clock by forcing SCL low, the software is given unlimited time to respond to the address.

The direction of a transaction is determined by reading the Read/Write Direction bit in the Status register (STATUS.DIR). This bit will be updated only when a valid address packet is received.

If the Transmit Collision bit in the Status register (STATUS.COLL) is set, the last packet addressed to the I²C slave had a packet collision. A collision causes the SDA and SCL lines to be released without any notification to software. The next AMATCH interrupt is, therefore, the first indication of the previous packet's collision. Collisions are intended to follow the SMBus Address Resolution Protocol (*ARP*).

After the address packet has been received from the I²C master, INTFLAG.AMATCH be set to '1' to clear it.

32.6.2.5.3 Receiving and Transmitting Data Packets

After the I²C slave has received an address packet, it will respond according to the direction either by waiting for the data packet to be received or by starting to send a data packet by writing to DATA.DATA. When a data packet is received or sent, INTFLAG.DRDY will be set. After receiving data, the I²C slave will send an acknowledge according to CTRLB.ACKACT.

Case 1: Data received

INTFLAG.DRDY is set, and SCL is held low, pending for SW interaction.

Case 2: Data sent

When a byte transmission is successfully completed, the INTFLAG.DRDY interrupt flag is set. If NACK is received, indicated by STATUS.RXNACK=1, the I²C slave must expect a stop or a repeated start to be received. The I²C slave must release the data line to allow the I²C master to generate a stop or repeated start. Upon detecting a stop condition, the Stop Received bit in the Interrupt Flag register (INTFLAG.PREC) will be set and the I²C slave will return to IDLE state.

32.6.2.5.4 High-Speed Mode

When the I²C slave is configured in High-speed mode (*Hs*, CTRLA.SPEED=0x2) and CTRLA.SCLSM=1, switching between Full-speed and High-speed modes is automatic. When the slave recognizes a START followed by a master code transmission and a NACK, it automatically switches to High-speed mode and sets the High-speed status bit (STATUS.HS). The slave will then remain in High-speed mode until a STOP is received.

32.6.2.5.5 10-Bit Addressing

10-bit Addressing is not available in Slave mode.

32.6.2.5.6 PMBus Group Command

When the PMBus Group Command bit in the CTRLB register is set (CTRLB.GCMD=1) and 7-bit addressing is used, INTFLAG.PREC will be set if the slave has been addressed since the last STOP condition. When CTRLB.GCMD=0, a STOP condition without address match will not be set INTFLAG.PREC.

The group command protocol is used to send commands to more than one device. The commands are sent in one continuous transmission with a single STOP condition at the end. When the STOP condition is detected by the slaves addressed during the group command, they all begin executing the command they received.

PMBus Group Command Example shows an example where this slave, bearing ADDRESS 1, is addressed after a repeated START condition. There can be multiple slaves addressed before and after this slave. Eventually, at the end of the group command, a single STOP is generated by the master. At this point a STOP interrupt is asserted.

Figure 32-12. PMBus Group Command Example

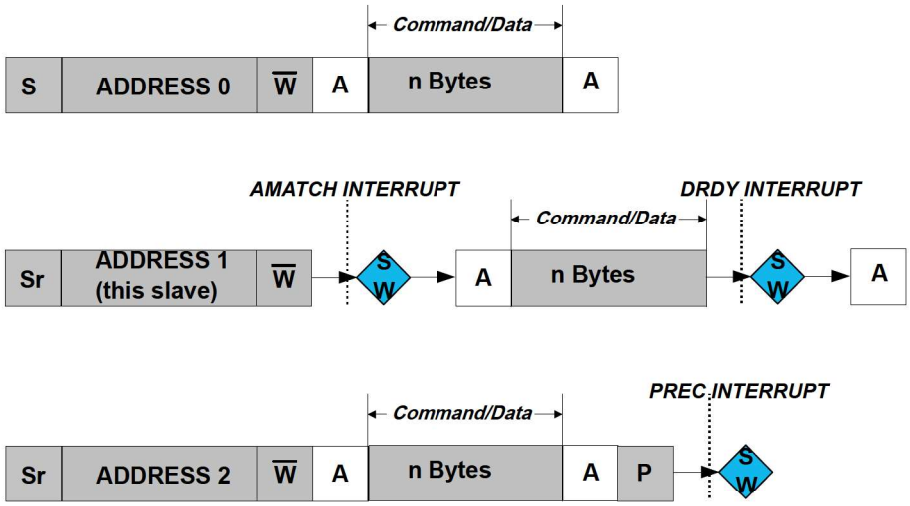

32.6.3 Additional Features

32.6.3.1 SMBus

The I²C includes three hardware SCL low time-outs which allow a time-out to occur for SMBus SCL low time-out, master extend time-out, and slave extend time-out. This allows for SMBus functionality These time-outs are driven by the GCLK_SERCOM_SLOW clock. The GCLK_SERCOM_SLOW clock is used to accurately time the time-out and must be configured to use a 32.768 kHz oscillator. The I²C interface also allows for a SMBus compatible SDA hold time.

- $T_{TIMEOUT}$: SCL low time of 25..35ms – Measured for a single SCL low period. It is enabled by CTRLA.LOWTOUTEN.
- $T_{LOW:SEXT}$: Cumulative clock low extend time of 25 ms – Measured as the cumulative SCL low extend time by a slave device in a single message from the initial START to the STOP. It is enabled by CTRLA.SEXTTOEN.
- $T_{LOW:MEXT}$: Cumulative clock low extend time of 10 ms – Measured as the cumulative SCL low extend time by the master device within a single byte from START-to-ACK, ACK-to-ACK, or ACK-to-STOP. It is enabled by CTRLA.MEXTTOEN.

32.6.3.2 Smart Mode

The I²C interface has a smart mode that simplifies application code and minimizes the user interaction needed to adhere to the I²C protocol. The smart mode accomplishes this by automatically issuing an ACK or NACK (based on the content of CTRLB.ACKACT) as soon as DATA.DATA is read.

32.6.3.3 4-Wire Mode

Writing a '1' to the Pin Usage bit in the Control A register (CTRLA.PINOUT) will enable 4-wire mode operation. In this mode, the internal I²C tri-state drivers are bypassed, and an external I²C compliant tri-state driver is needed when connecting to an I²C bus.

Figure 32-13. I²C Pad Interface

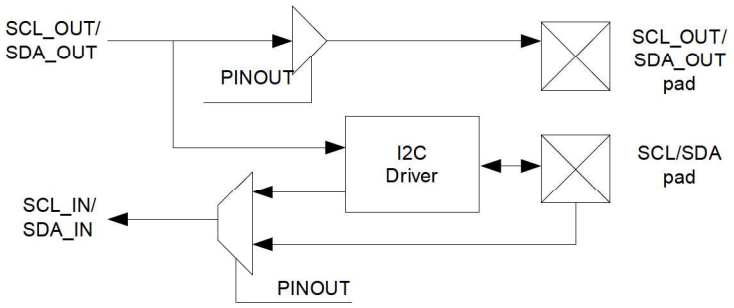

32.6.3.4 Quick Command

Setting the Quick Command Enable bit in the Control B register (CTRLB.QCEN) enables quick command. When quick command is enabled, the corresponding interrupt flag (INTFLAG.SB or INTFLAG.MB) is set immediately after the slave acknowledges the address. At this point, the software can either issue a stop command or a repeated start by writing CTRLB.CMD or ADDR.ADDR.

The use of the Quick Command mode (CTRLB.QCEN = 1) is only allowed if SCL Stretch Mode is CTRLA.SCLSM =0. The Quick Command feature is not available in High-Speed mode.

32.6.4 DMA, Interrupts and Events

Each interrupt source has its own interrupt flag. The interrupt flag in the Interrupt Flag Status and Clear register (INTFLAG) will be set when the interrupt condition is meet. Each interrupt can be individually enabled by writing '1' to the corresponding bit in the Interrupt Enable Set register (INTENSET), and disabled by writing '1' to the corresponding bit in the Interrupt Enable Clear register (INTENCLR). As both INTENSET and INTENCLR always reflect the same value, the status of interrupt enablement can be read from either register.

An interrupt request is generated when the interrupt flag is set and the corresponding interrupt is enabled. The interrupt request is active until the interrupt flag is cleared, the interrupt is disabled or the I²C is reset. See the 32.7.5 INTFLAG (Slave) or 32.8.6 INTFLAG (Master) register for details on how to clear interrupt flags.

Table 32-2. Module Request for SERCOM I²C Slave

Condition	Request		
	DMA	Interrupt	Event
Data needed for transmit (TX) (Slave transmit mode)	Yes (request cleared when data is written)		NA
Data received (RX) (Slave receive mode)	Yes (request cleared when data is read)		
Data Ready (DRDY)		Yes	
Address Match (AMATCH)		Yes	
Stop received (PREC)		Yes	
Error (ERROR)		Yes	

Table 32-3. Module Request for SERCOM I²C Master

Condition	Request		
	DMA	Interrupt	Event
Data needed for transmit (TX) (Master transmit mode)	Yes (request cleared when data is written)		NA
Data needed for transmit (RX) (Master transmit mode)	Yes (request cleared when data is read)		
Master on Bus (MB)		Yes	
Stop received (SB)		Yes	
Error (ERROR)		Yes	

32.6.4.1 DMA Operation

Smart mode must be enabled for DMA operation in the Control B register by writing CTRLB.SMEN=1.

32.6.4.1.1 Slave DMA

When using the I²C slave with DMA, an address match will cause the address interrupt flag (INTFLAG.ADDRMATCH) to be raised. After the interrupt has been serviced, data transfer will be performed through DMA.

The I²C slave generates the following requests:

- Write data received (RX): The request is set when master write data is received. The request is cleared when DATA is read.
- Read data needed for transmit (TX): The request is set when data is needed for a master read operation. The request is cleared when DATA is written.

When using the DMA with slave mode, the slave requires the transaction length of data that will be requested by the Master so the DMA can be configured properly.

32.6.4.1.2 Master DMA

When using the I²C master with DMA, the ADDR register must be written with the desired address (ADDR.ADDR), transaction length (ADDR.LEN), and transaction length enable (ADDR.LENEN). When ADDR.LENEN is written to 1 along with ADDR.ADDR, ADDR.LEN determines the number of data bytes in the transaction from 0 to 255. DMA is then used to transfer ADDR.LEN bytes followed by an automatically generated NACK (for master reads) and a STOP.

If a NACK is received by the slave for a master write transaction before ADDR.LEN bytes, a STOP will be automatically generated and the length error (STATUS.LENERR) will be raised along with the INTFLAG.ERROR interrupt.

The I²C master generates the following requests:

- Read data received (RX): The request is set when master read data is received. The request is cleared when DATA is read.
- Write data needed for transmit (TX): The request is set when data is needed for a master write operation. The request is cleared when DATA is written.

32.6.4.2 Interrupts

The I²C slave has the following interrupt sources. These are asynchronous interrupts. The DRDY, AMATCH, AND PREC will wake the device from any sleep mode.

- Error (ERROR)
- Data Ready (DRDY)
- Address Match (AMATCH)
- Stop Received (PREC)

The I²C master has the following interrupt sources. These are asynchronous interrupts. The SB and MB interrupts can wake the device from any sleep mode.

- Error (ERROR)
- Slave on Bus (SB)
- Master on Bus (MB)

Each interrupt source has its own interrupt flag. The interrupt flag in the Interrupt Flag Status and Clear register (INTFLAG) will be set when the interrupt condition is meet. Each interrupt can be individually enabled by writing '1' to the corresponding bit in the Interrupt Enable Set register (INTENSET), and disabled by writing '1' to the corresponding bit in the Interrupt Enable Clear register (INTENCLR). As both INTENSET and INTENCLR always reflect the same value, the status of interrupt enablement can be read from either register.

An interrupt request is generated when the interrupt flag is set and the corresponding interrupt is enabled. The interrupt request active until the interrupt flag is cleared, the interrupt is disabled or the I²C is reset. See the INTFLAG register for details on how to clear interrupt flags.

The value of INTFLAG indicates which interrupt is executed. Note that interrupts must be globally enabled for interrupt requests. Refer to the 9.2 Nested Vector Interrupt Controller for details.

32.6.5 Sleep Mode Operation

I²C Master Operation

The generic clock (GCLK_SERCOMx_CORE) will continue to run in idle sleep mode. If the Run In Standby bit in the Control A register (CTRLA.RUNSTDBY) is '1', the GLK_SERCOMx_CORE will also run in standby sleep mode. Any interrupt can wake up the device.

If CTRLA.RUNSTDBY=0, the GLK_SERCOMx_CORE will be disabled after any ongoing transaction is finished. Any interrupt can wake up the device.

I²C Slave Operation

Writing CTRLA.RUNSTDBY=1 will allow the Address Match interrupt to wake up the device.

When CTRLA.RUNSTDBY=0, all receptions will be dropped.

32.6.6 Synchronization

Due to asynchronicity between the main clock domain and the peripheral clock domains, some registers need to be synchronized when written or read.

The following bits are synchronized when written:

- Software Reset bit in the CTRLA register (CTRLA.SWRST)
- Enable bit in the CTRLA register (CTRLA.ENABLE)
- Command bits in CTRLB register (CTRLB.CMD)
- Write to Bus State bits in the Status register (STATUS.BUSSTATE)
- Address bits in the Address register (ADDR.ADDR) when in master operation.

The following registers are synchronized when written:

- Data (DATA) when in master operation

Required write-synchronization is denoted by the "Write-Synchronized" property in the register description.

32.7 Register Summary - I2C Slave

Offset	Name	Bit Pos.	7	6	5	4	3	2	1	0
0x00	CTRLA	7:0	RUNSTDBY			MODE[2:0]			ENABLE	SWRST
		15:8								
		23:16	SEXTTOEN		SDAHOLD[1:0]					PINOUT
		31:24		LOWTOUTEN			SCLSM		SPEED[1:0]	
0x04	CTRLB	7:0								
		15:8	AMODE[1:0]					AACKEN	GCMD	SMEN
		23:16						ACKACT	CMD[1:0]	
		31:24								
0x08 ... 0x13	Reserved									
0x14	INTENCLR	7:0	ERROR					DRDY	AMATCH	PREC
0x15	Reserved									
0x16	INTENSET	7:0	ERROR					DRDY	AMATCH	PREC
0x17	Reserved									
0x18	INTFLAG	7:0	ERROR					DRDY	AMATCH	PREC
0x19	Reserved									
0x1A	STATUS	7:0	CLKHOLD	LOWTOUT		SR	DIR	RXNACK	COLL	BUSERR
		15:8						HS	SEXTTOUT	
0x1C	SYNCBUSY	7:0							ENABLE	SWRST
		15:8								
		23:16								
		31:24								
0x20 ... 0x23	Reserved									
0x24	ADDR	7:0	ADDR[6:0]							GENCEN
		15:8								
		23:16	ADDRMASK[6:0]							
		31:24								
0x28	DATA	7:0	DATA[7:0]							
		15:8								

32.7.1 Control A

Name: CTRLA
Offset: 0x00
Reset: 0x00000000
Property: PAC Write-Protection, Enable-Protected Bits, Write-Synchronized Bits

Bit	31	30	29	28	27	26	25	24
		LOWTOUTEN			SCLSM		SPEED[1:0]	
Access		R/W			R/W		R/W	R/W
Reset		0			0		0	0

Bit	23	22	21	20	19	18	17	16
	SEXTTOEN		SDAHOLD[1:0]					PINOUT
Access	R/W		R/W	R/W				R/W
Reset	0		0	0				0

Bit	15	14	13	12	11	10	9	8
Access								
Reset								

Bit	7	6	5	4	3	2	1	0
	RUNSTDBY			MODE[2:0]			ENABLE	SWRST
Access	R/W			R/W	R/W	R/W	R/W	R/W
Reset	0			0	0	0	0	0

Bit 30 – LOWTOUTEN SCL Low Time-Out
This bit enables the SCL low time-out. If SCL is held low for 25ms-35ms, the slave will release its clock hold, if enabled, and reset the internal state machine. Any interrupt flags set at the time of time-out will remain set.
Note: This bit is enable-protected. This bit is not synchronized.

Value	Description
0	Time-out disabled.
1	Time-out enabled.

Bit 27 – SCLSM SCL Clock Stretch Mode
This bit controls when SCL will be stretched for software interaction.
Note: This bit is enable-protected. This bit is not synchronized.

Value	Description
0	SCL stretch according to Figure 32-10
1	SCL stretch only after ACK bit according to Figure 32-11

Bits 25:24 – SPEED[1:0] Transfer Speed
These bits define bus speed.
Note: This bit field is enable-protected. This bit field is not synchronized.

Value	Description
0x0	Standard-mode (Sm) up to 100 kHz and Fast-mode (Fm) up to 400 kHz
0x1	Fast-mode Plus (Fm+) up to 1 MHz
0x2	High-speed mode (Hs-mode) up to 3.4 MHz
0x3	Reserved

Bit 23 – SEXTTOEN Slave SCL Low Extend Time-Out
This bit enables the slave SCL low extend time-out. If SCL is cumulatively held low for greater than 25ms from the initial START to a STOP, the slave will release its clock hold if enabled and reset the internal state machine. Any

interrupt flags set at the time of time-out will remain set. If the address was recognized, PREC will be set when a STOP is received.
Note: This bit is enable-protected. This bit is not synchronized.

Value	Description
0	Time-out disabled
1	Time-out enabled

Bits 21:20 – SDAHOLD[1:0] SDA Hold Time
These bits define the SDA hold time with respect to the negative edge of SCL.
Note: This bit field is enable-protected. This bit field is not synchronized.

Value	Name	Description
0x0	DIS	Disabled
0x1	75NS	50-100ns hold time
0x2	450NS	300-600ns hold time
0x3	600NS	400-800ns hold time

Bit 16 – PINOUT Pin Usage
This bit sets the pin usage to either two- or four-wire operation:
Note: This bit is enable-protected. This bit is not synchronized.

Value	Description
0	4-wire operation disabled
1	4-wire operation enabled

Bit 7 – RUNSTDBY Run in Standby
This bit defines the functionality in standby sleep mode.
Note: This bit is enable-protected. This bit is not synchronized.

Value	Description
0	Disabled – All reception is dropped.
1	Wake on address match, if enabled.

Bits 4:2 – MODE[2:0] Operating Mode
These bits must be written to 0x04 to select the I^2C slave serial communication interface of the SERCOM.
Note: This bit field is enable-protected. This bit field is not synchronized.

Bit 1 – ENABLE Enable
Notes:

1. This bit is write-synchronized: SYNCBUSY.ENABLE must be checked to ensure the CTRLA.ENABLE synchronization is complete.
2. This bit is not enable-protected.

Value	Description
0	The peripheral is disabled or being disabled.
1	The peripheral is enabled.

Bit 0 – SWRST Software Reset
Writing '0' to this bit has no effect.
Writing '1' to this bit resets all registers in the SERCOM, except DBGCTRL, to their initial state, and the SERCOM will be disabled.
Writing '1' to CTRLA.SWRST will always take precedence, meaning that all other writes in the same write-operation will be discarded. Any register write access during the ongoing reset will result in an APB error. Reading any register will return the reset value of the register.
Notes:

1. This bit is write-synchronized: SYNCBUSY.SWRST must be checked to ensure the CTRLA.SWRST synchronization is complete.
2. This bit is not enable-protected.

Value	Description
0	There is no reset operation ongoing.
1	The reset operation is ongoing.

32.7.2 Control B

Name: CTRLB
Offset: 0x04
Reset: 0x00000000
Property: PAC Write-Protection, Enable-Protected Bits

Bit	31	30	29	28	27	26	25	24
Access								
Reset								

Bit	23	22	21	20	19	18	17	16
						ACKACT	CMD[1:0]	
Access						R/W	W	W
Reset						0	0	0

Bit	15	14	13	12	11	10	9	8
	AMODE[1:0]					AACKEN	GCMD	SMEN
Access	R/W	R/W				R/W	R/W	R/W
Reset	0	0				0	0	0

Bit	7	6	5	4	3	2	1	0
Access								
Reset								

Bit 18 – ACKACT Acknowledge Action
This bit defines the slave's acknowledge behavior after an address or data byte is received from the master. The acknowledge action is executed when a command is written to the CMD bits. If smart mode is enabled (CTRLB.SMEN=1), the acknowledge action is performed when the DATA register is read.
Note: This bit is not enable-protected.

Value	Description
0	Send ACK
1	Send NACK

Bits 17:16 – CMD[1:0] Command
This bit field triggers the slave operation as the below. The CMD bits are strobe bits, and always read as zero. The operation is dependent on the slave interrupt flags, INTFLAG.DRDY and INTFLAG.AMATCH, in addition to STATUS.DIR.
All interrupt flags (INTFLAG.DRDY, INTFLAG.AMATCH and INTFLAG.PREC) are automatically cleared when a command is given.
Note: This bit is not enable-protected.

Table 32-4. Command Description

CMD[1:0]	DIR	Action
0x0	X	(No action)
0x1	X	(Reserved)
0x2	Used to complete a transaction in response to a data interrupt (DRDY)	
	0 (Master write)	Execute acknowledge action succeeded by waiting for any start (S/Sr) condition
	1 (Master read)	Wait for any start (S/Sr) condition

.....continued		
CMD[1:0]	DIR	Action
0x3	Used in response to an address interrupt (AMATCH)	
	0 (Master write)	Execute acknowledge action succeeded by reception of next byte
	1 (Master read)	Execute acknowledge action succeeded by slave data interrupt
	Used in response to a data interrupt (DRDY)	
	0 (Master write)	Execute acknowledge action succeeded by reception of next byte
	1 (Master read)	Execute a byte read operation followed by ACK/NACK reception

Bits 15:14 – AMODE[1:0] Address Mode
These bits set the addressing mode.
Note: This bit field is enable-protected.

Value	Name	Description
0x0	MASK	The slave responds to the address written in ADDR.ADDR masked by the value in ADDR.ADDRMASK. See SERCOM – Serial Communication Interface for additional information.
0x1	2ADDRS	The slave responds to the two unique addresses in ADDR.ADDR and ADDR.ADDRMASK.
0x2	RANGE	The slave responds to the range of addresses between and including ADDR.ADDR and ADDR.ADDRMASK. ADDR.ADDR is the upper limit.
0x3	-	Reserved.

Bit 10 – AACKEN Automatic Acknowledge Enable
This bit enables the address to be automatically acknowledged if there is an address match.
Note: This bit is enable-protected.

Value	Description
0	Automatic acknowledge is disabled.
1	Automatic acknowledge is enabled.

Bit 9 – GCMD PMBus Group Command
This bit enables PMBus group command support. When enabled, the Stop Recived interrupt flag (INTFLAG.PREC) will be set when a STOP condition is detected if the slave has been addressed since the last STOP condition on the bus.
Note: This bit is enable-protected.

Value	Description
0	Group command is disabled.
1	Group command is enabled.

Bit 8 – SMEN Smart Mode Enable
When smart mode is enabled, data is acknowledged automatically when DATA.DATA is read.
Note: This bit is enable-protected.

Value	Description
0	Smart mode is disabled.
1	Smart mode is enabled.

32.7.3 Interrupt Enable Clear

Name: INTENCLR
Offset: 0x14
Reset: 0x00
Property: PAC Write-Protection

This register allows the user to disable an interrupt without doing a read-modify-write operation. Changes in this register will also be reflected in the Interrupt Enable Set register (INTENSET).

Bit	7	6	5	4	3	2	1	0
	ERROR					DRDY	AMATCH	PREC
Access	R/W					R/W	R/W	R/W
Reset	0					0	0	0

Bit 7 – ERROR Error Interrupt Enable
Writing '0' to this bit has no effect.
Writing '1' to this bit will clear the Error Interrupt Enable bit, which disables the Error interrupt.

Value	Description
0	Error interrupt is disabled.
1	Error interrupt is enabled.

Bit 2 – DRDY Data Ready Interrupt Enable
Writing '0' to this bit has no effect.
Writing '1' to this bit will clear the Data Ready bit, which disables the Data Ready interrupt.

Value	Description
0	The Data Ready interrupt is disabled.
1	The Data Ready interrupt is enabled.

Bit 1 – AMATCH Address Match Interrupt Enable
Writing '0' to this bit has no effect.
Writing '1' to this bit will clear the Address Match Interrupt Enable bit, which disables the Address Match interrupt.

Value	Description
0	The Address Match interrupt is disabled.
1	The Address Match interrupt is enabled.

Bit 0 – PREC Stop Received Interrupt Enable
Writing '0' to this bit has no effect.
Writing '1' to this bit will clear the Stop Received Interrupt Enable bit, which disables the Stop Received interrupt.

Value	Description
0	The Stop Received interrupt is disabled.
1	The Stop Received interrupt is enabled.

32.7.4 Interrupt Enable Set

Name: INTENSET
Offset: 0x16
Reset: 0x00
Property: PAC Write-Protection

This register allows the user to enable an interrupt without doing a read-modify-write operation. Changes in this register will also be reflected in the Interrupt Enable Clear register (INTENCLR).

Bit	7	6	5	4	3	2	1	0
	ERROR					DRDY	AMATCH	PREC
Access	R/W					R/W	R/W	R/W
Reset	0					0	0	0

Bit 7 – ERROR Error Interrupt Enable
Writing '0' to this bit has no effect.
Writing '1' to this bit will set the Error Interrupt Enable bit, which enables the Error interrupt.

Value	Description
0	Error interrupt is disabled.
1	Error interrupt is enabled.

Bit 2 – DRDY Data Ready Interrupt Enable
Writing '0' to this bit has no effect.
Writing '1' to this bit will set the Data Ready bit, which enables the Data Ready interrupt.

Value	Description
0	The Data Ready interrupt is disabled.
1	The Data Ready interrupt is enabled.

Bit 1 – AMATCH Address Match Interrupt Enable
Writing '0' to this bit has no effect.
Writing '1' to this bit will set the Address Match Interrupt Enable bit, which enables the Address Match interrupt.

Value	Description
0	The Address Match interrupt is disabled.
1	The Address Match interrupt is enabled.

Bit 0 – PREC Stop Received Interrupt Enable
Writing '0' to this bit has no effect.
Writing '1' to this bit will set the Stop Received Interrupt Enable bit, which enables the Stop Received interrupt.

Value	Description
0	The Stop Received interrupt is disabled.
1	The Stop Received interrupt is enabled.

32.7.5 Interrupt Flag Status and Clear

Name: INTFLAG
Offset: 0x18
Reset: 0x00
Property: -

Bit	7	6	5	4	3	2	1	0
	ERROR					DRDY	AMATCH	PREC
Access	R/W					R/W	R/W	R/W
Reset	0					0	0	0

Bit 7 – ERROR Error
This bit is set when any error is detected. Errors that will set this flag have corresponding status flags in the STATUS register. The corresponding bits in STATUS are SEXTTOUT, LOWTOUT, COLL, and BUSERR.
Writing '0' to this bit has no effect.
Writing '1' to this bit will clear the flag.

Bit 2 – DRDY Data Ready
This flag is set when a I^2C slave byte transmission is successfully completed.
The flag is cleared by hardware when either:

- Writing to the DATA register.
- Reading the DATA register with smart mode enabled.
- Writing a valid command to the CMD register.

Writing '0' to this bit has no effect.
Writing '1' to this bit will clear the Data Ready interrupt flag.

Bit 1 – AMATCH Address Match
This flag is set when the I^2C slave address match logic detects that a valid address has been received.
The flag is cleared by hardware when CTRL.CMD is written.
Writing '0' to this bit has no effect.
Writing '1' to this bit will clear the Address Match interrupt flag. When cleared, an ACK/NACK will be sent according to CTRLB.ACKACT.

Bit 0 – PREC Stop Received
This flag is set when a stop condition is detected for a transaction being processed. A stop condition detected between a bus master and another slave will not set this flag, unless the PMBus Group Command is enabled in the Control B register (CTRLB.GCMD=1).
This flag is cleared by hardware after a command is issued on the next address match.
Writing '0' to this bit has no effect.
Writing '1' to this bit will clear the Stop Received interrupt flag.

32.7.6 Status

Name: STATUS
Offset: 0x1A
Reset: 0x0000
Property: -

Bit	15	14	13	12	11	10	9	8
						HS	SEXTTOUT	
Access						R/W	R/W	
Reset						0	0	

Bit	7	6	5	4	3	2	1	0
	CLKHOLD	LOWTOUT		SR	DIR	RXNACK	COLL	BUSERR
Access	R/W	R/W		R	R	R	R/W	R/W
Reset	0	0		0	0	0	0	0

Bit 10 – HS High-speed
This bit is set if the slave detects a START followed by a Master Code transmission.
Writing a '0' to this bit has no effect.
Writing a '1' to this bit will clear the status. However, this flag is automatically cleared when a STOP is received.

Bit 9 – SEXTTOUT Slave SCL Low Extend Time-Out
This bit is set if a slave SCL low extend time-out occurs.
This bit is cleared automatically if responding to a new start condition with ACK or NACK (write 3 to CTRLB.CMD).
This bit is not cleared when INTFLAG.AMATCH is cleared. Write to '1' to clear SEXTTOUT status.
Writing a '0' to this bit has no effect.
Writing a '1' to this bit will clear the status.

Value	Description
0	No SCL low extend time-out has occurred.
1	SCL low extend time-out has occurred.

Bit 7 – CLKHOLD Clock Hold
The slave Clock Hold bit (STATUS.CLKHOLD) is set when the slave is holding the SCL line low, stretching the I2C clock. Software should consider this bit a read-only status flag that is set when INTFLAG.DRDY or INTFLAG.AMATCH is set. Do not clear the STATUS.CLKHOLD bit to preserve the current clock hold state.
This bit is automatically cleared when the corresponding interrupt is also cleared.

Bit 6 – LOWTOUT SCL Low Time-out
This bit is set if an SCL low time-out occurs.
This bit is cleared automatically if responding to a new start condition with ACK or NACK (write 3 to CTRLB.CMD).
This bit is not cleared when INTFLAG.AMATCH is cleared. Write to '1' to clear LOWTOUT status.
Writing a '0' to this bit has no effect.
Writing a '1' to this bit will clear the status.

Value	Description
0	No SCL low time-out has occurred.
1	SCL low time-out has occurred.

Bit 4 – SR Repeated Start
When INTFLAG.AMATCH is raised due to an address match, SR indicates a repeated start or start condition.
This flag is only valid while the INTFLAG.AMATCH flag is one.

Value	Description
0	Start condition on last address match
1	Repeated start condition on last address match

Bit 3 – DIR Read / Write Direction
The Read/Write Direction (STATUS.DIR) bit stores the direction of the last address packet received from a master.

Value	Description
0	Master write operation is in progress.
1	Master read operation is in progress.

Bit 2 – RXNACK Received Not Acknowledge
This bit indicates whether the last data packet sent was acknowledged or not.

Value	Description
0	Master responded with ACK.
1	Master responded with NACK.

Bit 1 – COLL Transmit Collision
If set, the I2C slave was not able to transmit a high data or NACK bit, the I2C slave will immediately release the SDA and SCL lines and wait for the next packet addressed to it.
This flag is intended for the SMBus address resolution protocol (ARP). A detected collision in non-ARP situations indicates that there has been a protocol violation, and should be treated as a bus error.
Note that this status will not trigger any interrupt, and should be checked by software to verify that the data were sent correctly. This bit is cleared automatically if responding to an address match with an ACK or a NACK (writing 0x3 to CTRLB.CMD). This bit is not cleared when INTFLAG.AMATCH is cleared. Write to '1' to clear COLL status.
Writing a '0' to this bit has no effect.
Writing a '1' to this bit will clear the status.

Value	Description
0	No collision detected on last data byte sent.
1	Collision detected on last data byte sent.

Bit 0 – BUSERR Bus Error
The Bus Error bit (STATUS.BUSERR) indicates that an illegal bus condition has occurred on the bus, regardless of bus ownership. An illegal bus condition is detected if a protocol violating start, repeated start or stop is detected on the I2C bus lines. A start condition directly followed by a stop condition is one example of a protocol violation. If a time-out occurs during a frame, this is also considered a protocol violation, and will set STATUS.BUSERR.
This bit is cleared automatically if responding to an address match with an ACK or a NACK (writing 0x3 to CTRLB.CMD). This bit is not cleared when INTFLAG.AMATCH is cleared. Write to '1' to clear BUSERR status.
Writing a '1' to this bit will clear the status.
Writing a '0' to this bit has no effect.

Value	Description
0	No bus error detected.
1	Bus error detected.

32.7.7 Synchronization Busy

Name: SYNCBUSY
Offset: 0x1C
Reset: 0x00000000
Property: -

Bit	31	30	29	28	27	26	25	24
Access								
Reset								

Bit	23	22	21	20	19	18	17	16
Access								
Reset								

Bit	15	14	13	12	11	10	9	8
Access								
Reset								

Bit	7	6	5	4	3	2	1	0
							ENABLE	SWRST
Access							R	R
Reset							0	0

Bit 1 – ENABLE SERCOM Enable Synchronization Busy
Enabling and disabling the SERCOM (CTRLA.ENABLE) requires synchronization. When written, the SYNCBUSY.ENABLE bit will be set until synchronization is complete.

Value	Description
0	Enable synchronization is not busy.
1	Enable synchronization is busy.

Bit 0 – SWRST Software Reset Synchronization Busy
Resetting the SERCOM (CTRLA.SWRST) requires synchronization. When written, the SYNCBUSY.SWRST bit will be set until synchronization is complete.

Value	Description
0	SWRST synchronization is not busy.
1	SWRST synchronization is busy.

32.7.8 Address

Name: ADDR
Offset: 0x24
Reset: 0x00000000
Property: PAC Write-Protection, Enable-Protected

Bit	31	30	29	28	27	26	25	24
Access								
Reset								

Bit	23	22	21	20	19	18	17	16
	ADDRMASK[6:0]							
Access	R/W	R/W	R/W	R/W	R/W	R/W	R/W	
Reset	0	0	0	0	0	0	0	

Bit	15	14	13	12	11	10	9	8
Access								
Reset								

Bit	7	6	5	4	3	2	1	0
	ADDR[6:0]							GENCEN
Access	R/W	R/W	R/W	R/W	R/W	R/W	R/W	R/W
Reset	0	0	0	0	0	0	0	0

Bits 23:17 – ADDRMASK[6:0] Address Mask
These bits act as a second address match register, an address mask register or the lower limit of an address range, depending on the CTRLB.AMODE setting.

Bits 7:1 – ADDR[6:0] Address
These bits contain the I^2C slave address used by the slave address match logic to determine if a master has addressed the slave.
When using 7-bit addressing, the slave address is represented by ADDR[6:0].
When the address match logic detects a match, INTFLAG.AMATCH is set and STATUS.DIR is updated to indicate whether it is a read or a write transaction.

Bit 0 – GENCEN General Call Address Enable
A general call address is an address consisting of all-zeroes, including the direction bit (master write).

Value	Description
0	General call address recognition is disabled.
1	General call address recognition is enabled.

32.7.9 Data

Name: DATA
Offset: 0x28
Reset: 0x0000
Property: Write-Synchronized, Read-Synchronized

Bit	15	14	13	12	11	10	9	8
Access								
Reset								

Bit	7	6	5	4	3	2	1	0
	DATA[7:0]							
Access	R/W	R/W	R/W	R/W	R/W	R/W	R/W	R/W
Reset	0	0	0	0	0	0	0	0

Bits 7:0 – DATA[7:0] Data
The slave data register I/O location (DATA.DATA) provides access to the master transmit and receive data buffers. Reading valid data or writing data to be transmitted can be successfully done only when SCL is held low by the slave (STATUS.CLKHOLD is set). An exception occurs when reading the last data byte after the stop condition has been received.
Accessing DATA.DATA auto-triggers I^2C bus operations. The operation performed depends on the state of CTRLB.ACKACT, CTRLB.SMEN and the type of access (read/write).
Writing or reading DATA.DATA when not in smart mode does not require synchronization.

32.8 Register Summary - I2C Master

Offset	Name	Bit Pos.	7	6	5	4	3	2	1	0
0x00	CTRLA	7:0	RUNSTDBY			MODE[2:0]			ENABLE	SWRST
		15:8								
		23:16	SEXTTOEN	MEXTTOEN	SDAHOLD[1:0]					PINOUT
		31:24		LOWTOUTEN	INACTOUT[1:0]		SCLSM		SPEED[1:0]	
0x04	CTRLB	7:0								
		15:8							QCEN	SMEN
		23:16						ACKACT	CMD[1:0]	
		31:24								
0x08 ... 0x0B	Reserved									
0x0C	BAUD	7:0	BAUD[7:0]							
		15:8	BAUDLOW[7:0]							
		23:16	HSBAUD[7:0]							
		31:24	HSBAUDLOW[7:0]							
0x10 ... 0x13	Reserved									
0x14	INTENCLR	7:0	ERROR						SB	MB
0x15	Reserved									
0x16	INTENSET	7:0	ERROR						SB	MB
0x17	Reserved									
0x18	INTFLAG	7:0	ERROR						SB	MB
0x19	Reserved									
0x1A	STATUS	7:0	CLKHOLD	LOWTOUT	BUSSTATE[1:0]			RXNACK	ARBLOST	BUSERR
		15:8						LENERR	SEXTTOUT	MEXTTOUT
0x1C	SYNCBUSY	7:0						SYSOP	ENABLE	SWRST
		15:8								
		23:16								
		31:24								
0x20 0x23	Reserved									
0x24	ADDR	7:0	ADDR[7:0]							
		15:8	TENBITEN	HS	LENEN			ADDR[10:8]		
		23:16	LEN[7:0]							
		31:24								
0x28	DATA	7:0	DATA[7:0]							
		15:8								
0x2A ... 0x2F	Reserved									
0x30	DBGCTRL	7:0								DBGSTOP

32.8.1 Control A

Name: CTRLA
Offset: 0x00
Reset: 0x00000000
Property: PAC Write-Protection, Enable-Protected Bits, Write-Synchronized Bits

Bit	31	30	29	28	27	26	25	24
		LOWTOUTEN	INACTOUT[1:0]		SCLSM		SPEED[1:0]	
Access		R/W	R/W	R/W	R/W		R/W	R/W
Reset		0	0	0	0		0	0

Bit	23	22	21	20	19	18	17	16
	SEXTTOEN	MEXTTOEN	SDAHOLD[1:0]					PINOUT
Access	R/W	R/W	R/W	R/W				R/W
Reset	0	0	0	0				0

Bit	15	14	13	12	11	10	9	8
Access								
Reset								

Bit	7	6	5	4	3	2	1	0
	RUNSTDBY			MODE[2:0]			ENABLE	SWRST
Access	R/W			R/W	R/W	R/W	R/W	R/W
Reset	0			0	0	0	0	0

Bit 30 – LOWTOUTEN SCL Low Time-Out
This bit enables the SCL low time-out. If SCL is held low for 25ms-35ms, the master will release its clock hold, if enabled, and complete the current transaction. A stop condition will automatically be transmitted.
INTFLAG.SB or INTFLAG.MB will be set as normal, but the clock hold will be released. The STATUS.LOWTOUT and STATUS.BUSERR status bits will be set.
Note: This bit is enable-protected. This bit is not synchronized.

Value	Description
0	Time-out disabled.
1	Time-out enabled.

Bits 29:28 – INACTOUT[1:0] Inactive Time-Out
If the inactive bus time-out is enabled and the bus is inactive for longer than the time-out setting, the bus state logic will be set to idle. An inactive bus arise when either an I^2C master or slave is holding the SCL low.
Enabling this option is necessary for SMBus compatibility, but can also be used in a non-SMBus set-up.
Calculated time-out periods are based on a 100kHz baud rate.
Note: This bit is enable-protected. This bit is not synchronized.

Value	Name	Description
0x0	DIS	Disabled
0x1	55US	5-6 SCL cycle time-out (50-60µs)
0x2	105US	10-11 SCL cycle time-out (100-110µs)
0x3	205US	20-21 SCL cycle time-out (200-210µs)

Bit 27 – SCLSM SCL Clock Stretch Mode
This bit controls when SCL will be stretched for software interaction.
Note: This bit is enable-protected. This bit is not synchronized.

Value	Description
0	SCL stretch according to Figure 32-5.

Value	Description
1	SCL stretch only after ACK bit, Figure 32-6.

Bits 25:24 – SPEED[1:0] Transfer Speed
These bits define bus speed.
Note: This bit field is enable-protected. This bit field is not synchronized.

Value	Description
0x0	Standard-mode (Sm) up to 100 kHz and Fast-mode (Fm) up to 400 kHz
0x1	Fast-mode Plus (Fm+) up to 1 MHz
0x2	High-speed mode (Hs-mode) up to 3.4 MHz
0x3	Reserved

Bit 23 – SEXTTOEN Slave SCL Low Extend Time-Out
This bit enables the slave SCL low extend time-out. If SCL is cumulatively held low for greater than 25ms from the initial START to a STOP, the master will release its clock hold if enabled, and complete the current transaction. A STOP will automatically be transmitted.
SB or MB will be set as normal, but CLKHOLD will be release. The MEXTTOUT and BUSERR status bits will be set.
Note: This bit is enable-protected. This bit is not synchronized.

Value	Description
0	Time-out disabled
1	Time-out enabled

Bit 22 – MEXTTOEN Master SCL Low Extend Time-Out
This bit enables the master SCL low extend time-out. If SCL is cumulatively held low for greater than 10ms from START-to-ACK, ACK-to-ACK, or ACK-to-STOP the master will release its clock hold if enabled, and complete the current transaction. A STOP will automatically be transmitted.
SB or MB will be set as normal, but CLKHOLD will be released. The MEXTTOUT and BUSERR status bits will be set.
Note: This bit is enable-protected. This bit is not synchronized.

Value	Description
0	Time-out disabled
1	Time-out enabled

Bits 21:20 – SDAHOLD[1:0] SDA Hold Time
These bits define the SDA hold time with respect to the negative edge of SCL.
Note: This bit field is enable-protected. This bit field is not synchronized.

Value	Name	Description
0x0	DIS	Disabled
0x1	75NS	50-100ns hold time
0x2	450NS	300-600ns hold time
0x3	600NS	400-800ns hold time

Bit 16 – PINOUT Pin Usage
This bit set the pin usage to either two- or four-wire operation:
Note: This bit is enable-protected. This bit is not synchronized.

Value	Description
0	4-wire operation disabled.
1	4-wire operation enabled.

Bit 7 – RUNSTDBY Run in Standby
This bit defines the functionality in standby sleep mode.
Note: This bit is enable-protected. This bit is not synchronized.

Value	Description
0	GCLK_SERCOMx_CORE is disabled and the I^2C master will not operate in standby sleep mode.
1	GCLK_SERCOMx_CORE is enabled in all sleep modes.

Bits 4:2 – MODE[2:0] Operating Mode
These bits must be written to 0x5 to select the I^2C master serial communication interface of the SERCOM.
Note: This bit field is enable-protected. This bit field is not synchronized.

Bit 1 – ENABLE Enable
Notes:

1. This bit is write-synchronized: SYNCBUSY.ENABLE must be checked to ensure the CTRLA.ENABLE synchronization is complete.
2. This bit is not enable-protected.

Value	Description
0	The peripheral is disabled or being disabled.
1	The peripheral is enabled.

Bit 0 – SWRST Software Reset
Writing '0' to this bit has no effect.
Writing '1' to this bit resets all registers in the SERCOM, except DBGCTRL, to their initial state, and the SERCOM will be disabled.
Writing '1' to CTRLA.SWRST will always take precedence, meaning that all other writes in the same write-operation will be discarded. Any register write access during the ongoing reset will result in an APB error. Reading any register will return the reset value of the register.
Notes:

1. This bit is write-synchronized: SYNCBUSY.SWRST must be checked to ensure the CTRLA.SWRST synchronization is complete.
2. This bit is not enable-protected.

Value	Description
0	There is no reset operation ongoing.
1	The reset operation is ongoing.

32.8.2 Control B

Name: CTRLB
Offset: 0x04
Reset: 0x00000000
Property: PAC Write-Protection, Enable-Protected Bits

Bit	31	30	29	28	27	26	25	24
Access								
Reset								

Bit	23	22	21	20	19	18	17	16
						ACKACT	CMD[1:0]	
Access						R/W	W	W
Reset						0	0	0

Bit	15	14	13	12	11	10	9	8
							QCEN	SMEN
Access							R/W	R/W
Reset							0	0

Bit	7	6	5	4	3	2	1	0
Access								
Reset								

Bit 18 – ACKACT Acknowledge Action
This bit defines the I^2C master's acknowledge behavior after a data byte is received from the I^2C slave. The acknowledge action is executed when a command is written to CTRLB.CMD, or if smart mode is enabled (CTRLB.SMEN is written to one), when DATA.DATA is read.
Note: This bit is not enable-protected.

Value	Description
0	Send ACK.
1	Send NACK.

Bits 17:16 – CMD[1:0] Command
Writing these bits triggers a master operation as described below. The CMD bits are strobe bits, and always read as zero. The acknowledge action is only valid in master read mode. In master write mode, a command will only result in a repeated start or stop condition. The CTRLB.ACKACT bit and the CMD bits can be written at the same time, and then the acknowledge action will be updated before the command is triggered.
Commands can only be issued when either the Slave on Bus interrupt flag (INTFLAG.SB) or Master on Bus interrupt flag (INTFLAG.MB) is '1'.
If CMD 0x1 is issued, a repeated start will be issued followed by the transmission of the current address in ADDR.ADDR. If another address is desired, ADDR.ADDR must be written instead of the CMD bits. This will trigger a repeated start followed by transmission of the new address.
Issuing a command will set the System Operation bit in the Synchronization Busy register (SYNCBUSY.SYSOP).
Note: This bit field is not enable-protected.

Table 32-5. Command Description

CMD[1:0]	Direction	Action
0x0	X	(No action)
0x1	X	Execute acknowledge action succeeded by repeated Start
0x2	0 (Write)	No operation
	1 (Read)	Execute acknowledge action succeeded by a byte read operation

.....continued		
CMD[1:0]	**Direction**	**Action**
0x3	X	Execute acknowledge action succeeded by issuing a stop condition

Bit 9 – QCEN Quick Command Enable
Note: This bit is enable-protected.

Value	Description
0	Quick Command is disabled.
1	Quick Command is enabled.

Bit 8 – SMEN Smart Mode Enable
When smart mode is enabled, acknowledge action is sent when DATA.DATA is read.
Note: This bit is enable-protected.

Value	Description
0	Smart mode is disabled.
1	Smart mode is enabled.

32.8.3 Baud Rate

Name: BAUD
Offset: 0x0C
Reset: 0x0000
Property: PAC Write-Protection, Enable-Protected

Bit	31	30	29	28	27	26	25	24
	HSBAUDLOW[7:0]							
Access	R/W	R/W	R/W	R/W	R/W	R/W	R/W	R/W
Reset	0	0	0	0	0	0	0	0

Bit	23	22	21	20	19	18	17	16
	HSBAUD[7:0]							
Access	R/W	R/W	R/W	R/W	R/W	R/W	R/W	R/W
Reset	0	0	0	0	0	0	0	0

Bit	15	14	13	12	11	10	9	8
	BAUDLOW[7:0]							
Access	R/W	R/W	R/W	R/W	R/W	R/W	R/W	R/W
Reset	0	0	0	0	0	0	0	0

Bit	7	6	5	4	3	2	1	0
	BAUD[7:0]							
Access	R/W	R/W	R/W	R/W	R/W	R/W	R/W	R/W
Reset	0	0	0	0	0	0	0	0

Bits 31:24 – HSBAUDLOW[7:0] High Speed Master Baud Rate Low
HSBAUDLOW non-zero: HSBAUDLOW indicates the SCL low time in High-speed mode according to
$\text{HSBAUDLOW} = f_{\text{GCLK}} \cdot T_{\text{LOW}} - 1$
HSBAUDLOW equal to zero: The HSBAUD register is used to time T_{LOW}, T_{HIGH}, $T_{SU;STO}$, $T_{HD;STA}$ and $T_{SU;STA}$. T_{BUF} is timed by the BAUD register.

Bits 23:16 – HSBAUD[7:0] High Speed Master Baud Rate
This bit field indicates the SCL high time in High-speed mode according to the following formula. When HSBAUDLOW is zero, T_{LOW}, T_{HIGH}, $T_{SU;STO}$, $T_{HD;STA}$ and $T_{SU;STA}$ are derived using this formula. T_{BUF} is timed by the BAUD register.
$\text{HSBAUD} = f_{\text{GCLK}} \cdot T_{\text{HIGH}} - 1$

Bits 15:8 – BAUDLOW[7:0] Master Baud Rate Low
If this bit field is non-zero, the SCL low time will be described by the value written.
For more information on how to calculate the frequency, see SERCOM 29.6.2.3 Clock Generation – Baud-Rate Generator.

Bits 7:0 – BAUD[7:0] Master Baud Rate
This bit field is used to derive the SCL high time if BAUD.BAUDLOW is non-zero. If BAUD.BAUDLOW is zero, BAUD will be used to generate both high and low periods of the SCL.
For more information on how to calculate the frequency, see SERCOM 29.6.2.3 Clock Generation – Baud-Rate Generator.

32.8.4 Interrupt Enable Clear

Name: INTENCLR
Offset: 0x14
Reset: 0x00
Property: PAC Write-Protection

This register allows the user to disable an interrupt without doing a read-modify-write operation. Changes in this register will also be reflected in the Interrupt Enable Set register (INTENSET).

Bit	7	6	5	4	3	2	1	0
	ERROR						SB	MB
Access	R/W						R/W	R/W
Reset	0						0	0

Bit 7 – ERROR Error Interrupt Enable
Writing '0' to this bit has no effect.
Writing '1' to this bit will clear the Error Interrupt Enable bit, which disables the Error interrupt.

Value	Description
0	Error interrupt is disabled.
1	Error interrupt is enabled.

Bit 1 – SB Slave on Bus Interrupt Enable
Writing '0' to this bit has no effect.
Writing '1' to this bit will clear the Slave on Bus Interrupt Enable bit, which disables the Slave on Bus interrupt.

Value	Description
0	The Slave on Bus interrupt is disabled.
1	The Slave on Bus interrupt is enabled.

Bit 0 – MB Master on Bus Interrupt Enable
Writing '0' to this bit has no effect.
Writing '1' to this bit will clear the Master on Bus Interrupt Enable bit, which disables the Master on Bus interrupt.

Value	Description
0	The Master on Bus interrupt is disabled.
1	The Master on Bus interrupt is enabled.

32.8.5 Interrupt Enable Set

Name: INTENSET
Offset: 0x16
Reset: 0x00
Property: PAC Write-Protection

This register allows the user to enable an interrupt without doing a read-modify-write operation. Changes in this register will also be reflected in the Interrupt Enable Clear register (INTENCLR).

Bit	7	6	5	4	3	2	1	0
	ERROR						SB	MB
Access	R/W						R/W	R/W
Reset	0						0	0

Bit 7 – ERROR Error Interrupt Enable
Writing '0' to this bit has no effect.
Writing '1' to this bit will set the Error Interrupt Enable bit, which enables the Error interrupt.

Value	Description
0	Error interrupt is disabled.
1	Error interrupt is enabled.

Bit 1 – SB Slave on Bus Interrupt Enable
Writing '0' to this bit has no effect.
Writing '1' to this bit will set the Slave on Bus Interrupt Enable bit, which enables the Slave on Bus interrupt.

Value	Description
0	The Slave on Bus interrupt is disabled.
1	The Slave on Bus interrupt is enabled.

Bit 0 – MB Master on Bus Interrupt Enable
Writing '0' to this bit has no effect.
Writing '1' to this bit will set the Master on Bus Interrupt Enable bit, which enables the Master on Bus interrupt.

Value	Description
0	The Master on Bus interrupt is disabled.
1	The Master on Bus interrupt is enabled.

32.8.6 Interrupt Flag Status and Clear

Name: INTFLAG
Offset: 0x18
Reset: 0x00
Property: -

Bit	7	6	5	4	3	2	1	0
	ERROR						SB	MB
Access	R/W						R/W	R/W
Reset	0						0	0

Bit 7 – ERROR Error
This flag is cleared by writing '1' to it.
This bit is set when any error is detected. Errors that will set this flag have corresponding status bits in the STATUS register. These status bits are LENERR, SEXTTOUT, MEXTTOUT, LOWTOUT, ARBLOST, and BUSERR.
Writing '0' to this bit has no effect.
Writing '1' to this bit will clear the flag.

Bit 1 – SB Slave on Bus
The Slave on Bus flag (SB) is set when a byte is successfully received in master read mode, i.e., no arbitration lost or bus error occurred during the operation. When this flag is set, the master forces the SCL line low, stretching the I^2C clock period. The SCL line will be released and SB will be cleared on one of the following actions:

- Writing to ADDR.ADDR
- Writing to DATA.DATA
- Reading DATA.DATA when smart mode is enabled (CTRLB.SMEN)
- Writing a valid command to CTRLB.CMD

Writing '1' to this bit location will clear the SB flag. The transaction will not continue or be terminated until one of the above actions is performed.
Writing '0' to this bit has no effect.

Bit 0 – MB Master on Bus
This flag is set when a byte is transmitted in master write mode. The flag is set regardless of the occurrence of a bus error or an arbitration lost condition. MB is also set when arbitration is lost during sending of NACK in master read mode, or when issuing a start condition if the bus state is unknown. When this flag is set and arbitration is not lost, the master forces the SCL line low, stretching the I^2C clock period. The SCL line will be released and MB will be cleared on one of the following actions:

- Writing to ADDR.ADDR
- Writing to DATA.DATA
- Reading DATA.DATA when smart mode is enabled (CTRLB.SMEN)
- Writing a valid command to CTRLB.CMD

Writing '1' to this bit location will clear the MB flag. The transaction will not continue or be terminated until one of the above actions is performed.
Writing '0' to this bit has no effect.

32.8.7 Status

Name: STATUS
Offset: 0x1A
Reset: 0x0000
Property: Write-Synchronized

Bit	15	14	13	12	11	10	9	8
						LENERR	SEXTTOUT	MEXTTOUT
Access						R/W	R/W	R/W
Reset						0	0	0

Bit	7	6	5	4	3	2	1	0
	CLKHOLD	LOWTOUT	BUSSTATE[1:0]			RXNACK	ARBLOST	BUSERR
Access	R/W	R/W	R/W	R/W		R	R/W	R/W
Reset	0	0	0	0		0	0	0

Bit 10 – LENERR Transaction Length Error
This bit is set when automatic length is used for a DMA transaction and the slave sends a NACK before ADDR.LEN bytes have been written by the master.
Writing '1' to this bit location will clear STATUS.LENERR. This flag is automatically cleared when writing to the ADDR register.
Writing '0' to this bit has no effect.
Note: This bit is not synchronized.

Bit 9 – SEXTTOUT Slave SCL Low Extend Time-Out
This bit is set if a slave SCL low extend time-out occurs.
This bit is automatically cleared when writing to the ADDR register.
Writing '1' to this bit location will clear SEXTTOUT. Normal use of the I^2C interface does not require the SEXTTOUT flag to be cleared by this method.
Writing '0' to this bit has no effect.
Note: This bit is not synchronized.

BIt 8 – MEXTTOUT Master SCL Low Extend Time-Out
This bit is set if a master SCL low time-out occurs.
Writing '1' to this bit location will clear STATUS.MEXTTOUT. This flag is automatically cleared when writing to the ADDR register.
Writing '0' to this bit has no effect.
Note: This bit is not synchronized.

Bit 7 – CLKHOLD Clock Hold
This bit is set when the master is holding the SCL line low, stretching the I^2C clock. Software should consider this bit when INTFLAG.SB or INTFLAG.MB is set. Do not clear the STATUS.CLKHOLD bit to preserve the current clock hold state.
This bit is cleared when the corresponding interrupt flag is cleared and the next operation is given.
Writing '0' to this bit has no effect.
Writing '1' to this bit has no effect.
Note: This bit is not synchronized.

Bit 6 – LOWTOUT SCL Low Time-Out
This bit is set if an SCL low time-out occurs.
Writing '1' to this bit location will clear this bit. This flag is automatically cleared when writing to the ADDR register.
Writing '0' to this bit has no effect.
Note: This bit is not synchronized.

Bits 5:4 – BUSSTATE[1:0] Bus State
These bits indicate the current I^2C bus state.
When in UNKNOWN state, writing 0x1 to BUSSTATE forces the bus state into the IDLE state. The bus state cannot be forced into any other state.
Note: This bit field is write-synchronized: SYNCBUSY.SYSOP must be checked to ensure the STATUS.BUSSTATE synchronization is complete.

Value	Name	Description
0x0	UNKNOWN	The bus state is unknown to the I^2C master and will wait for a stop condition to be detected or wait to be forced into an idle state by software
0x1	IDLE	The bus state is waiting for a transaction to be initialized
0x2	OWNER	The I^2C master is the current owner of the bus
0x3	BUSY	Some other I^2C master owns the bus

Bit 2 – RXNACK Received Not Acknowledge
This bit indicates whether the last address or data packet sent was acknowledged or not.
Writing '0' to this bit has no effect.
Writing '1' to this bit has no effect.
Note: This bit is not synchronized.

Value	Description
0	Slave responded with ACK.
1	Slave responded with NACK.

Bit 1 – ARBLOST Arbitration Lost
This bit is set if arbitration is lost while transmitting a high data bit or a NACK bit, or while issuing a start or repeated start condition on the bus. The Master on Bus interrupt flag (INTFLAG.MB) will be set when STATUS.ARBLOST is set.
Writing the ADDR.ADDR register will automatically clear STATUS.ARBLOST.
Writing '0' to this bit has no effect.
Writing '1' to this bit will clear it.
Note: This bit is not synchronized.

Bit 0 – BUSERR Bus Error
This bit indicates that an illegal bus condition has occurred on the bus, regardless of bus ownership. An illegal bus condition is detected if a protocol violating start, repeated start or stop is detected on the I^2C bus lines. A start condition directly followed by a stop condition is one example of a protocol violation. If a time-out occurs during a frame, this is also considered a protocol violation, and will set BUSERR.
If the I^2C master is the bus owner at the time a bus error occurs, STATUS.ARBLOST and INTFLAG.MB will be set in addition to BUSERR.
Writing the ADDR.ADDR register will automatically clear the BUSERR flag.
Writing '0' to this bit has no effect.
Writing '1' to this bit will clear it.
Note: This bit is not synchronized.

32.8.8 Synchronization Busy

Name: SYNCBUSY
Offset: 0x1C
Reset: 0x00000000
Property: -

Bit	31	30	29	28	27	26	25	24
Access								
Reset								

Bit	23	22	21	20	19	18	17	16
Access								
Reset								

Bit	15	14	13	12	11	10	9	8
Access								
Reset								

Bit	7	6	5	4	3	2	1	0
						SYSOP	ENABLE	SWRST
Access						R	R	R
Reset						0	0	0

Bit 2 – SYSOP System Operation Synchronization Busy
Writing CTRLB.CMD, STATUS.BUSSTATE, ADDR, or DATA when the SERCOM is enabled requires synchronization. When written, the SYNCBUSY.SYSOP bit will be set until synchronization is complete.

Value	Description
0	System operation synchronization is not busy.
1	System operation synchronization is busy.

Bit 1 – ENABLE SERCOM Enable Synchronization Busy
Enabling and disabling the SERCOM (CTRLA.ENABLE) requires synchronization. When written, the SYNCBUSY.ENABLE bit will be set until synchronization is complete.

Value	Description
0	Enable synchronization is not busy.
1	Enable synchronization is busy.

Bit 0 – SWRST Software Reset Synchronization Busy
Resetting the SERCOM (CTRLA.SWRST) requires synchronization. When written, the SYNCBUSY.SWRST bit will be set until synchronization is complete.

Value	Description
0	SWRST synchronization is not busy.
1	SWRST synchronization is busy.

32.8.9 Address

Name: ADDR
Offset: 0x24
Reset: 0x0000
Property: Write-Synchronized Bits

Bit	31	30	29	28	27	26	25	24
Access								
Reset								

Bit	23	22	21	20	19	18	17	16
	LEN[7:0]							
Access	R/W	R/W	R/W	R/W	R/W	R/W	R/W	R/W
Reset	0	0	0	0	0	0	0	0

Bit	15	14	13	12	11	10	9	8
	TENBITEN	HS	LENEN			ADDR[10:8]		
Access	R/W	R/W	R/W			R/W	R/W	R/W
Reset	0	0	0			0	0	0

Bit	7	6	5	4	3	2	1	0
	ADDR[7:0]							
Access	R/W	R/W	R/W	R/W	R/W	R/W	R/W	R/W
Reset	0	0	0	0	0	0	0	0

Bits 23:16 – LEN[7:0] Transaction Length
These bits define the transaction length of a DMA transaction from 0 to 255 bytes. The Transfer Length Enable (LENEN) bit must be written to '1' in order to use DMA.
Note: This bit field is not synchronized.

Bit 15 – TENBITEN Ten Bit Addressing Enable
This bit enables 10-bit addressing. This bit can be written simultaneously with ADDR to indicate a 10-bit or 7-bit address transmission.
Note: This bit is not synchronized.

Value	Description
0	10-bit addressing disabled.
1	10-bit addressing enabled.

Bit 14 – HS High Speed
This bit enables High-speed mode for the current transfer from repeated START to STOP. This bit can be written simultaneously with ADDR for a high speed transfer.
Note: This bit is not synchronized.

Value	Description
0	High-speed transfer disabled.
1	High-speed transfer enabled.

Bit 13 – LENEN Transfer Length Enable
Note: This bit is not synchronized.

Value	Description
0	Automatic transfer length disabled.
1	Automatic transfer length enabled.

Bits 10:0 – ADDR[10:0] Address
When ADDR is written, the consecutive operation will depend on the bus state:
UNKNOWN: INTFLAG.MB and STATUS.BUSERR are set, and the operation is terminated.
BUSY: The I^2C master will await further operation until the bus becomes IDLE.
IDLE: The I^2C master will issue a start condition followed by the address written in ADDR. If the address is acknowledged, SCL is forced and held low, and STATUS.CLKHOLD and INTFLAG.MB are set.
OWNER: A repeated start sequence will be performed. If the previous transaction was a read, the acknowledge action is sent before the repeated start bus condition is issued on the bus. Writing ADDR to issue a repeated start is performed while INTFLAG.MB or INTFLAG.SB is set.
STATUS.BUSERR, STATUS.ARBLOST, INTFLAG.MB and INTFLAG.SB will be cleared when ADDR is written.
The ADDR register can be read at any time without interfering with ongoing bus activity, as a read access does not trigger the master logic to perform any bus protocol related operations.
The I^2C master control logic uses bit 0 of ADDR as the bus protocol's read/write flag (R/W); 0 for write and 1 for read.
Note: This bit field is write-synchronized: SYNCBUSY.SYSOP must be checked to ensure the ADDR.ADDR synchronization is complete.

32.8.10 Data

Name: DATA
Offset: 0x28
Reset: 0x0000
Property: Write-Synchronized

Note: This register is write-synchronized: SYNCBUSY.SYSOP must be checked to ensure the DATA register synchronization is complete.

Bit	15	14	13	12	11	10	9	8
Access								
Reset								

Bit	7	6	5	4	3	2	1	0
	DATA[7:0]							
Access	R/W	R/W	R/W	R/W	R/W	R/W	R/W	R/W
Reset	0	0	0	0	0	0	0	0

Bits 7:0 – DATA[7:0] Data
The master data register I/O location (DATA) provides access to the master transmit and receive data buffers. Reading valid data or writing data to be transmitted can be successfully done only when SCL is held low by the master (STATUS.CLKHOLD is set). An exception is reading the last data byte after the stop condition has been sent. Accessing DATA.DATA auto-triggers I^2C bus operations. The operation performed depends on the state of CTRLB.ACKACT, CTRLB.SMEN and the type of access (read/write).
Writing or reading DATA.DATA when not in Smart mode does not require synchronization.

32.8.11 Debug Control

Name: DBGCTRL
Offset: 0x30
Reset: 0x00
Property: PAC Write-Protection

Bit	7	6	5	4	3	2	1	0
								DBGSTOP
Access								R/W
Reset								0

Bit 0 – DBGSTOP Debug Stop Mode
This bit controls functionality when the CPU is halted by an external debugger.
This bit will be reset after a software system reset.

Value	Description
0	The baud-rate generator continues normal operation when the CPU is halted by an external debugger.
1	The baud-rate generator is halted when the CPU is halted by an external debugger.

33. Timer Counter (TC)

33.1 Overview

There are up to five TC peripheral instances. Each TC consists of a counter, a prescaler, compare/capture channels and control logic. The counter can be set to count events or clock pulses. The counter, together with the compare/capture channels, can be configured to timestamp input events or I/O pin edges, allowing for capturing of frequency and pulse width.

A TC can also perform waveform generation, such as frequency generation and pulse-width modulation.

33.2 Features

- Selectable configuration
  - 8, 16, or 32-bit TC operation with compare/capture channels
- 2 compare/capture channels (CC) with:
  - Double buffered timer period setting
  - Double buffered compare channel
- Waveform generation
  - Frequency generation
  - Single-slope pulse-width modulation
- Input capture
  - Event or I/O pin edge capture
  - Frequency capture
  - Pulse-width capture
  - Time-stamp capture
  - Minimum and maximum capture
- One input event
- Interrupts/output events on:
  - Counter overflow or underflow
  - Compare match or capture
- Internal prescaler
- DMA support

33.3 Block Diagram

Figure 33-1. Timer/Counter Block Diagram

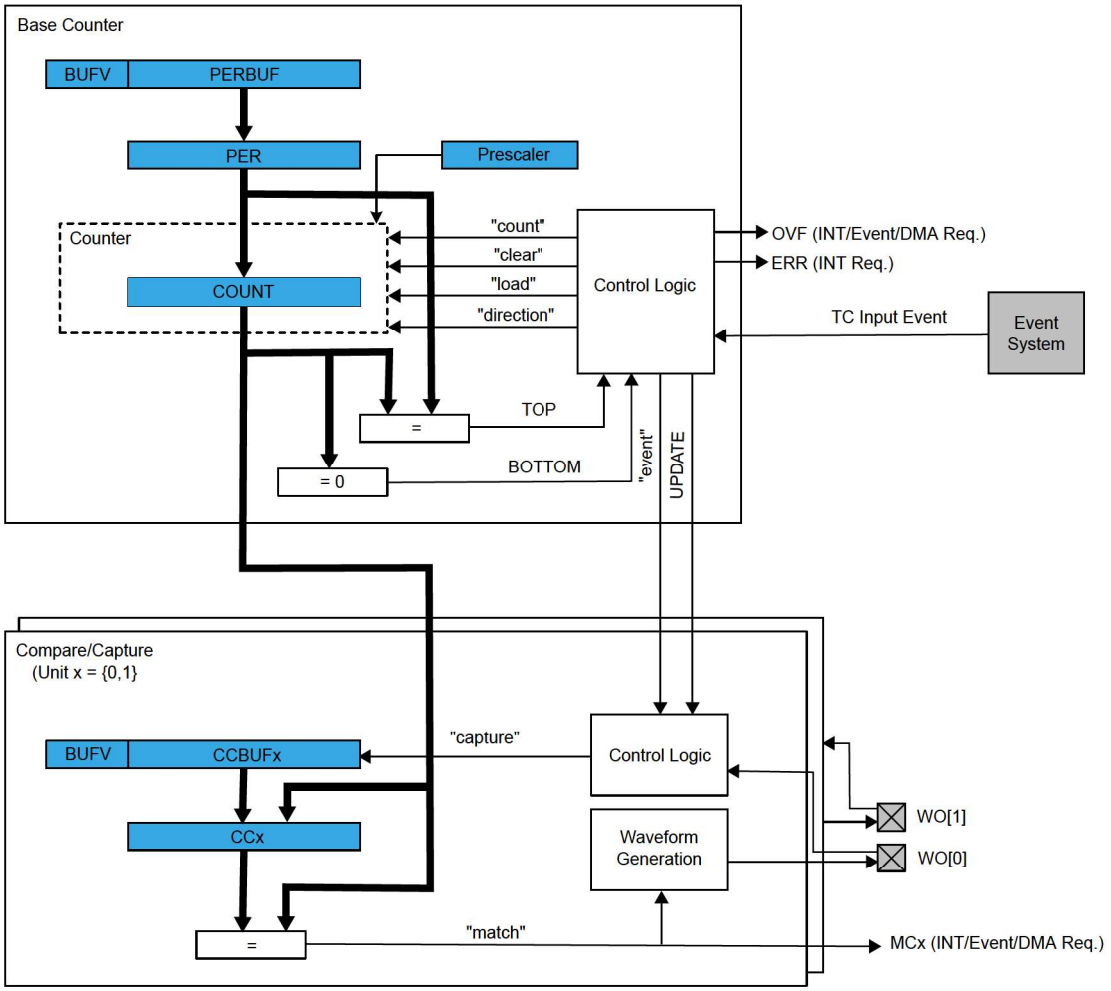

33.4 Signal Description

Table 33-1. Signal Description for TC.

Signal Name	Type	Description
WO[1:0]	Digital output	Waveform output
	Digital input	Capture input

Refer to 4. Pinout and Packaging for details on the pin mapping for this peripheral. One signal can be mapped on several pins. TC2 and TC3 WO[1:0] signals are not available on the 32-pin variants.

33.5 Peripheral Dependencies

Peripheral	Base Address	IRQ	AHB CLK	APB CLK	Generic CLK	PAC		Events		DMA	Sleep Walking
			Enabled at reset	Enabled at reset	Index	Index	Prot at reset	User	Generator	Index	
TC0	0x42003000	16	-	N	25	12	N	23: EVU	52: OVF	21: OVF	Y
									53-54: MC0-1	22-23: MC0-1	
TC1	0x42003400	17	-	N	25	13	N	24: EVU	55: OVF	24: OVF	Y
									56-57: MC0-1	25-26: MC0-1	
TC2	0x42003800	18	-	N	26	14	N	25: EVU	58:OVF	27: OVF	Y
									59-60: MC0-1	28-29: MC0-1	
TC3	0x42003C00	19	-	N	26	15	N	26: EVU	61: OVF	30: OVF	Y
									62-63: MC0-1	31-32: MC0-1	
TC4	0x42004000	20	-	N	27	16	N	27: EVU	64:OVF	33: OVF	Y
									65-66: MC0-1	34-35: MC0-1	

33.6 Functional Description

33.6.1 Principle of Operation

The following definitions are used throughout the documentation:

Table 33-2. Timer/Counter Definitions

Name	Description
TOP	The counter reaches TOP when it becomes equal to the highest value in the count sequence. The TOP value can be the same as Period (PER) or the Compare Channel 0 (CC0) register value depending on the waveform generator mode in 33.6.2.6.1 Waveform Output Operations.
ZERO	The counter is ZERO when it contains all zeroes
MAX	The counter reaches MAX when it contains all ones
UPDATE	The timer/counter signals an update when it reaches ZERO or TOP, depending on the direction settings.
Timer	Increment / decrement / clear / reload steps are performed on each prescaled clock cycle.
Counter	Increment / decrement / clear / reload steps are performed on each detected event.
CC	For compare operations, the CC are referred to as “compare channels” For capture operations, the CC are referred to as “capture channels.”

Each TC instance has up to two compare/capture channels (CC0 and CC1).

The counter in the TC can either count events from the Event System, or clock ticks of the GCLK_TCx clock, which may be divided by the prescaler.

The counter value is passed to the CCx where it can be either compared to user-defined values or captured.

For optimized timing the CCx and CCBUFx registers share a common resource. When writing into CCBUFx, lock the access to the corresponding CCx register (SYNCBUSY.CCX = 1) till the CCBUFx register value is not loaded into the CCx register (BUFVx = 1). Each buffer register has a buffer valid (BUFV) flag that indicates when the buffer contains a new value.

The Counter register (COUNT) and the Compare and Capture registers with buffers (CCx and CCBUFx) can be configured as 8, 16, or 32-bit registers, with according MAX values. Mode settings (CTRLA.MODE) determine the maximum range of the Counter register.

In 8-bit mode, a Period Value (PER) register and its Period Buffer Value (PERBUF) register are also available. The counter range and the operating frequency determine the maximum time resolution achievable with the TC peripheral.

The TC can be set to count up or down. Under normal operation, the counter value is continuously compared to the TOP or ZERO value to determine whether the counter has reached that value. On a comparison match the TC can request DMA transactions, or generate interrupts or events for the Event System.

In compare operation, the counter value is continuously compared to the values in the CCx registers. In case of a match the TC can request DMA transactions, or generate interrupts or events for the Event System. In waveform generator mode, these comparisons are used to set the waveform period or pulse width.

Capture operation can be enabled to perform input signal period and pulse width measurements, or to capture selectable edges from an IO pin or internal event from Event System.

33.6.2 Basic Operation

33.6.2.1 Initialization

The following registers are enable-protected, meaning that they can only be written when the TC is disabled (CTRLA.ENABLE = 0):

- Control A register (CTRLA), except the Enable (ENABLE) and Software Reset (SWRST) bits
- Drive Control register (DRVCTRL)
- Wave register (WAVE)
- Event Control register (EVCTRL)

Writing to Enable-Protected bits and setting the CTRLA.ENABLE bit can be performed in a single 32-bit access of the CTRLA register. Writing to Enable-Protected bits and clearing the CTRLA.ENABLE bit cannot be performed in a single 32-bit access.

Before enabling the TC, the peripheral must be configured by the following steps:

1. Enable the TC bus clock (CLK_TCx_APB).
2. Select 8, 16, or 32-bit counter mode through the TC Mode bit group in the Control A register (CTRLA.MODE). The default mode is 16-bit.
3. Select one wave generation operation in the Waveform Generation Operation bit group in the WAVE register (WAVE.WAVEGEN).
4. If required, the GCLK_TCx clock can be prescaled via the Prescaler bit group in the Control A register (CTRLA.PRESCALER).
   – If the prescaler is used, select a prescaler synchronization operation via the Prescaler and Counter Synchronization bit group in the Control A register (CTRLA.PRESYNC).
5. If required, select one-shot operation by writing a '1' to the One-Shot bit in the Control B Set register (CTRLBSET.ONESHOT).
6. If required, configure the counting direction 'down' (starting from the TOP value) by writing a '1' to the Counter Direction bit in the Control B register (CTRLBSET.DIR).
7. For capture operation, enable the individual channels to capture in the Capture Channel x Enable bit group in the Control A register (CTRLA.CAPTEN).
8. If required, enable inversion of the waveform output or IO pin input signal for individual channels via the Invert Enable bit group in the Drive Control register (DRVCTRL.INVEN).

Note: Two instances of the TC may share a peripheral clock channel. In this case, they cannot be set to different clock frequencies. Refer to the peripheral clock channel mapping of the Generic Clock Controller (GCLK.PCHTRLm) to identify shared peripheral clocks.

33.6.2.2 Enabling, Disabling, and Resetting

The TC is enabled by writing a '1' to the Enable bit in the Control A register (CTRLA.ENABLE). The TC is disabled by writing a zero to CTRLA.ENABLE.

The TC is reset by writing a '1' to the Software Reset bit in the Control A register (CTRLA.SWRST). All registers in the TC, except DBGCTRL, will be reset to their initial state. Refer to the CTRLA register for details.

The TC should be disabled before the TC is reset in order to avoid undefined behavior.

33.6.2.3 Prescaler Selection

The GCLK_TCx is fed into the internal prescaler.

The prescaler consists of a counter that counts up to the selected prescaler value, whereupon the output of the prescaler toggles.

If the prescaler value is higher than one, the counter update condition can be optionally executed on the next GCLK_TCx clock pulse or the next prescaled clock pulse. For further details, refer to Prescaler (CTRLA.PRESCALER) and Counter Synchronization (CTRLA.PRESYNC) description.

Prescaler outputs from 1 to 1/1024 are available. For a complete list of available prescaler outputs, see the register description for the Prescaler bit group in the Control A register (CTRLA.PRESCALER).

Note: When counting events, the prescaler is bypassed.

The joint stream of prescaler ticks and event action ticks is called CLK_TC_CNT.

Figure 33-2. Prescaler

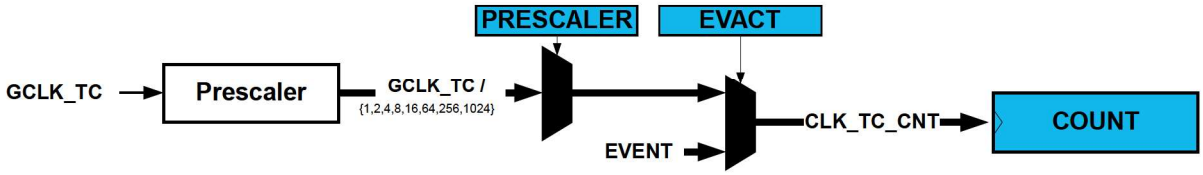

33.6.2.4 Counter Mode

The counter mode is selected by the Mode bit group in the Control A register (CTRLA.MODE). By default, the counter is enabled in the 16-bit counter resolution. Three counter resolutions are available:

- COUNT8: The 8-bit TC has its own Period Value and Period Buffer Value registers (PER and PERBUF).
- COUNT16: 16-bit is the default counter mode. There is no dedicated period register in this mode.
- COUNT32: This mode is achieved by pairing two 16-bit TC peripherals. TC0 is paired with TC1, TC2 is paired with TC3. TC4 cannot be paired.
  When paired, the TC peripherals are configured using the registers of the even-numbered TC. The odd-numbered partner will act as a slave, and the Slave bit in the Status register (STATUS.SLAVE) will be set. The register values of a slave will not reflect the registers of the 32-bit counter. Writing to any of the slave registers will not affect the 32-bit counter. Normal access to the slave COUNT and CCx registers is not allowed.

33.6.2.5 Counter Operations

Depending on the mode of operation, the counter is cleared, reloaded, incremented, or decremented at each TC clock input (CLK_TC_CNT). A counter clear or reload marks the end of the current counter cycle and the start of a new one.

The counting direction is set by the Direction bit in the Control B register (CTRLB.DIR). If this bit is zero the counter is counting up, and counting down if CTRLB.DIR=1. The counter will count up or down for each tick (clock or event) until it reaches TOP or ZERO. When it is counting up and TOP is reached, the counter will be set to zero at the next tick (overflow) and the Overflow Interrupt Flag in the Interrupt Flag Status and Clear register (INTFLAG.OVF) will be set. When it is counting down, the counter is reloaded with the TOP value when ZERO is reached (underflow), and INTFLAG.OVF is set.

INTFLAG.OVF can be used to trigger an interrupt, a DMA request, or an event. An overflow/underflow occurrence (i.e., a compare match with TOP/ZERO) will stop counting if the One-Shot bit in the Control B register is set (CTRLBSET.ONESHOT).

It is possible to change the counter value (by writing directly in the COUNT register) even when the counter is running. When starting the TC, the COUNT value will be either ZERO or TOP (depending on the counting direction

set by CTRLBSET.DIR or CTRLBCLR.DIR), unless a different value has been written to it, or the TC has been stopped at a value other than ZERO. The write access has higher priority than count, clear, or reload. The direction of the counter can also be changed when the counter is running. See also the following figure.

Figure 33-3. Counter Operation

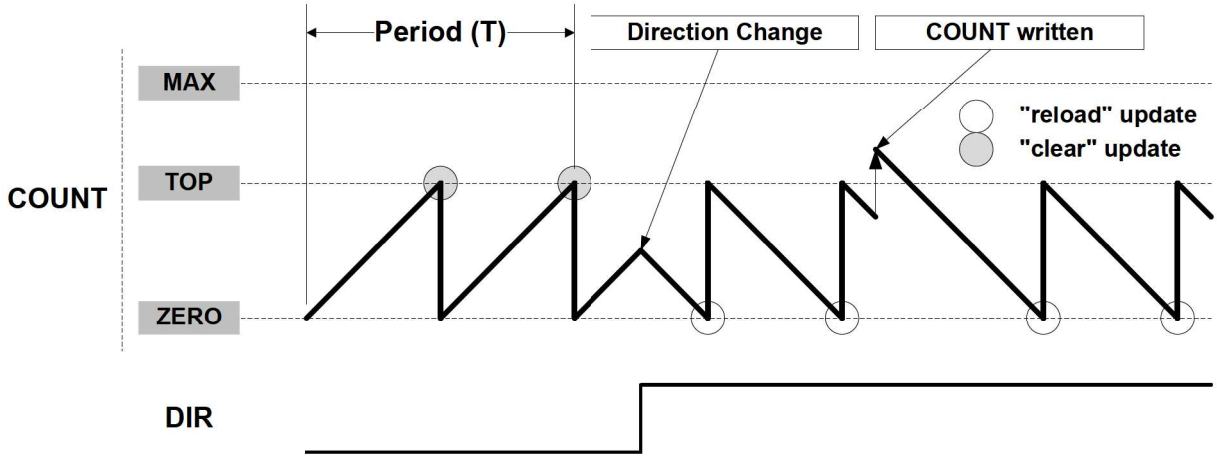

Due to asynchronous clock domains, the internal counter settings are written when the synchronization is complete. Normal operation must be used when using the counter as timer base for the capture channels.

33.6.2.5.1 Stop Command and Event Action

A Stop command can be issued from software by using Command bits in the Control B Set register (CTRLBSET.CMD = 0x2, STOP). When a Stop is detected while the counter is running, the counter will be loaded with the starting value (ZERO or TOP, depending on direction set by CTRLBSET.DIR or CTRLBCLR.DIR). All waveforms are cleared and the Stop bit in the Status register is set (STATUS.STOP).

33.6.2.5.2 Re-Trigger Command and Event Action

A re-trigger command can be issued from software by writing the Command bits in the Control B Set register (CTRLBSET.CMD = 0x1, RETRIGGER), or from event when a re-trigger event action is configured in the Event Control register (EVCTRL.EVACT = 0x1, RETRIGGER).

When the command is detected during counting operation, the counter will be reloaded or cleared, depending on the counting direction (CTRLBSET.DIR or CTRLBCLR.DIR). When the re-trigger command is detected while the counter is stopped, the counter will resume counting from the current value in the COUNT register.

Note: When a re-trigger event action is configured in the Event Action bits in the Event Control register (EVCTRL.EVACT=0x1, RETRIGGER), enabling the counter will not start the counter. The counter will start on the next incoming event and restart on corresponding following event.

33.6.2.5.3 Count Event Action

The TC can count events. When an event is received, the counter increases or decreases the value, depending on direction settings (CTRLBSET.DIR or CTRLBCLR.DIR). The count event action can be selected by the Event Action bit group in the Event Control register (EVCTRL.EVACT=0x2, COUNT).

Note: If this operation mode is selected, PWM generation is not supported.

33.6.2.5.4 Start Event Action

The TC can start counting operation on an event when previously stopped. In this configuration, the event has no effect if the counter is already counting. When the peripheral is enabled, the counter operation starts when the event is received or when a re-trigger software command is applied.

The Start TC on Event action can be selected by the Event Action bit group in the Event Control register (EVCTRL.EVACT=0x3, START).

33.6.2.6 Compare Operations

By default, the Compare/Capture channel is configured for compare operations.

When using the TC and the Compare/Capture Value registers (CCx) for compare operations, the counter value is continuously compared to the values in the CCx registers. This can be used for timer or for waveform operation.

The Channel x Compare Buffer (CCBUFx) registers provide double buffer capability. The double buffering synchronizes the update of the CCx register with the buffer value at the UPDATE condition or a forced update command (CTRLBSET.CMD=UPDATE). For further details, refer to 33.6.2.7 Double Buffering. The synchronization prevents the occurrence of odd-length, non-symmetrical pulses and ensures glitch-free output.

33.6.2.6.1 Waveform Output Operations

The compare channels can be used for waveform generation on output port pins. To make the waveform available on the connected pin, the following requirements must be fulfilled:

1. Choose a waveform generation mode in the Waveform Generation Operation bit in Waveform register (WAVE.WAVEGEN).
2. Optionally invert the waveform output WO[x] by writing the corresponding Output Waveform x Invert Enable bit in the Driver Control register (DRVCTRL.INVENx).
3. Configure the pins with the I/O Pin Controller. Refer to PORT - I/O Pin Controller for details.

Note: Event MCx must not be used when the compare channel is set in waveform output operating mode, except when used as non-recoverable fault input.

The counter value is continuously compared with each CCx value. On a comparison match, the Match or Capture Channel x bit in the Interrupt Flag Status and Clear register (INTFLAG.MCx) will be set (see Normal Frequency Operation). An interrupt/and or event can be generated on comparison match if enabled. The same condition generates a DMA request.

There are four waveform configurations for the Waveform Generation Operation bit group in the Waveform register (WAVE.WAVEGEN). This will influence how the waveform is generated and impose restrictions on the top value. The configurations are:

- Normal frequency (NFRQ)
- Match frequency (MFRQ)
- Normal pulse-width modulation (NPWM)
- Match pulse-width modulation (MPWM)

When using NPWM or NFRQ configuration, the TOP will be determined by the counter resolution. In 8-bit Counter mode, the Period register (PER) is used as TOP, and the TOP can be changed by writing to the PER register. In 16- and 32-bit Counter mode, TOP is fixed to the maximum (MAX) value of the counter.

Normal Frequency Generation (NFRQ)

For Normal Frequency Generation, the period time (T) is controlled by the period register (PER) for 8-bit Counter mode and MAX for 16- and 32-bit mode. The waveform generation output (WO[x]) is toggled on each compare match between COUNT and CCx, and the corresponding Match or Capture Channel x Interrupt Flag (INTFLAG.MCx) will be set.

Figure 33-4. Normal Frequency Operation

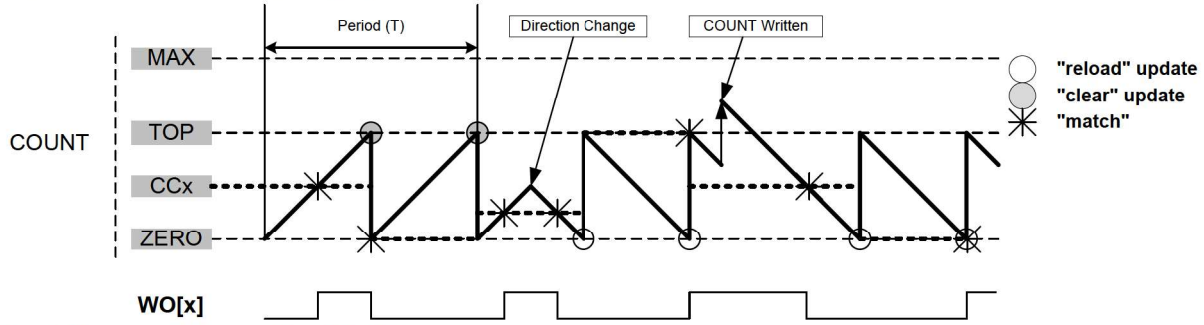

Match Frequency Generation (MFRQ)

For Match Frequency Generation, the period time (T) is controlled by the CC0 register instead of PER or MAX. WO[0] toggles on each update condition.

Figure 33-5. Match Frequency Operation

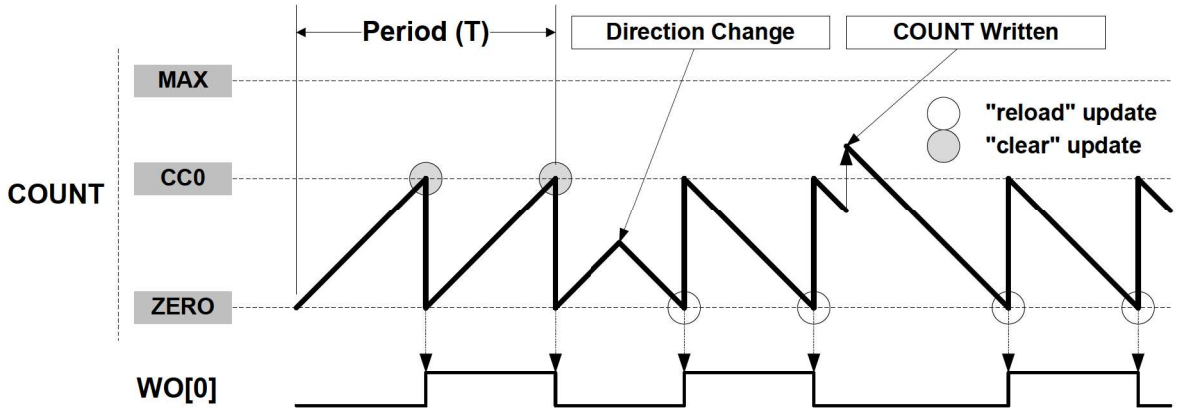

Normal Pulse-Width Modulation Operation (NPWM)

NPWM uses single-slope PWM generation.

For single-slope PWM generation, the period time (T) is controlled by the TOP value, and CCx controls the duty cycle of the generated waveform output. When up-counting, the WO[x] is set at start or compare match between the COUNT and TOP values, and cleared on compare match between COUNT and CCx register values. When down-counting, the WO[x] is cleared at start or compare match between the COUNT and ZERO values, and set on compare match between COUNT and CCx register values.

The following equation calculates the exact resolution for a single-slope PWM (R_{PWM_SS}) waveform:

$$R_{PWM_SS} = \frac{\log(TOP+1)}{\log(2)}$$

The PWM frequency (f_{PWM_SS}) depends on TOP value and the peripheral clock frequency (f_{GCLK_TC}), and can be calculated by the following equation:

$$f_{PWM_SS} = \frac{f_{GCLK_TC}}{N(TOP+1)}$$

Where N represents the prescaler divider used (1, 2, 4, 8, 16, 64, 256, 1024).

Match Pulse-Width Modulation Operation (MPWM)

In MPWM, the output of WO[1] is depending on CC1 as shown in the figure below. On every overflow/underflow, a one-TC-clock-cycle negative pulse is put out on WO[0] (not shown in the figure).

Figure 33-6. Match PWM Operation

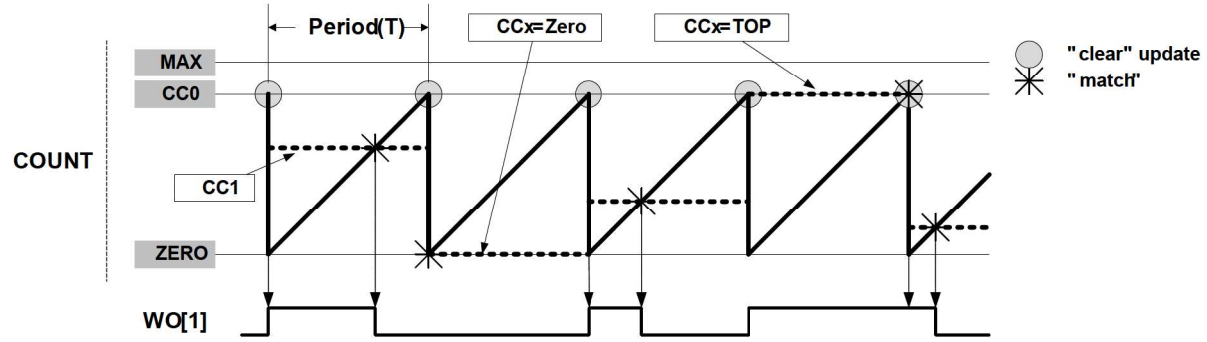

The table below shows the Update Counter and Overflow Event/Interrupt Generation conditions in different operation modes.

Table 33-3. Counter Update and Overflow Event/interrupt Conditions in TC

Name	Operation	TOP	Update	Output Waveform		OVFIF/Event	
				On Match	On Update	Up	Down
NFRQ	Normal Frequency	PER	TOP/ ZERO	Toggle	Stable	TOP	ZERO
MFRQ	Match Frequency	CC0	TOP/ ZERO	Toggle	Stable	TOP	ZERO
NPWM	Single-slope PWM	PER	TOP/ ZERO	See description above		TOP	ZERO
MPWM	Single-slope PWM	CC0	TOP/ ZERO	See description above		TOP	ZERO

33.6.2.7 Double Buffering

The Compare Channels (CCx) registers, and the Period (PER) register in 8-bit mode are double buffered. Each buffer register has a buffer valid bit (CCBUFVx or PERBUFV) in the STATUS register, which indicates that the buffer register contains a new valid value that can be copied into the corresponding register. As long as the respective buffer valid status flag (PERBUFV or CCBUFVx) are set to '1', related syncbusy bits are set (SYNCBUSY.PER or SYNCBUSY.CCx), a write to the respective PER/PERBUF or CCx/CCBUFx registers will generate a PAC error, and access to the respective PER or CCx register is invalid.

When the buffer valid flag bit in the STATUS register is '1' and the Lock Update bit in the CTRLB register is set to '0', (writing CTRLBCLR.LUPD to '1'), double buffering is enabled: the data from buffer registers will be copied into the corresponding register under hardware UPDATE conditions, then the buffer valid flags bit in the STATUS register are automatically cleared by hardware. The buffer valid flag bits in the STATUS register can be cleared manually, but must be cleared two times successively.

Note: The software update command (CTRLBSET.CMD=0x3) is acting independently of the LUPD value.

A compare register is double buffered as in the following figure.

Figure 33-7. Compare Channel Double Buffering

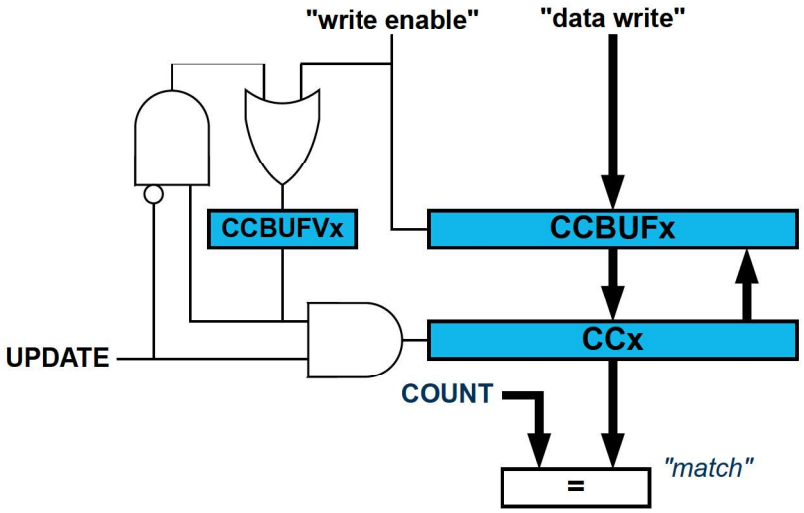

Both the registers (PER/CCx) and corresponding buffer registers (PERBUF/CCBUFx) are available in the I/O register map, and the double buffering feature is not mandatory. The double buffering is disabled by writing a '1' to CTRLBSET.LUPD.

Note: In NFRQ, MFRQ or PWM down-counting counter mode (CTRLBSET.DIR=1), when double buffering is enabled (CTRLBCLR.LUPD=1), PERBUF register is continously copied into the PER independently of update conditions.

Changing the Period

The counter period can be changed by writing a new TOP value to the Period register (PER or CC0, depending on the waveform generation mode), which is available in 8-bit mode. Any period update on registers (PER or CCx) is effective after the synchronization delay.

Figure 33-8. Unbuffered Single-Slope Up-Counting Operation

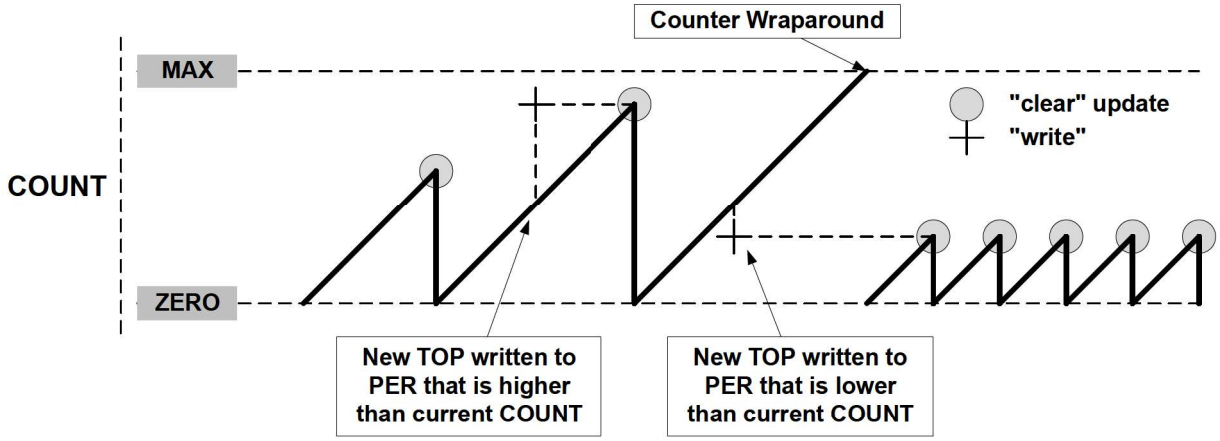

A counter wraparound can occur in any operation mode when up-counting without buffering, see the following figure.

COUNT and TOP are continuously compared, so when a new TOP value that is lower than current COUNT is written to TOP, COUNT will wrap before a compare match.

Figure 33-9. Unbuffered Single-Slope Down-Counting Operation

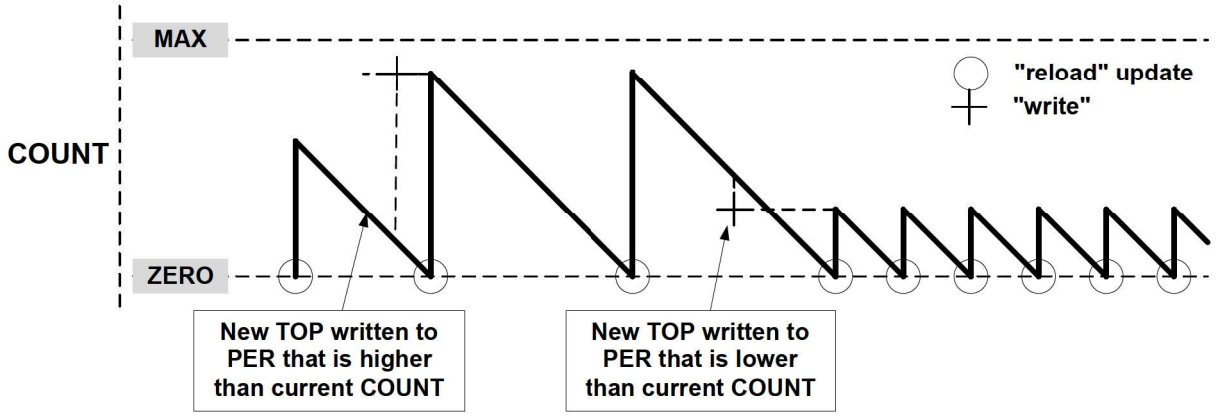

When double buffering is used, the buffer can be written at any time and the counter will still maintain correct operation. The period register is always updated on the update condition, as shown in the following figure. This prevents wraparound and the generation of odd waveforms.

Figure 33-10. Changing the Period Using Buffering

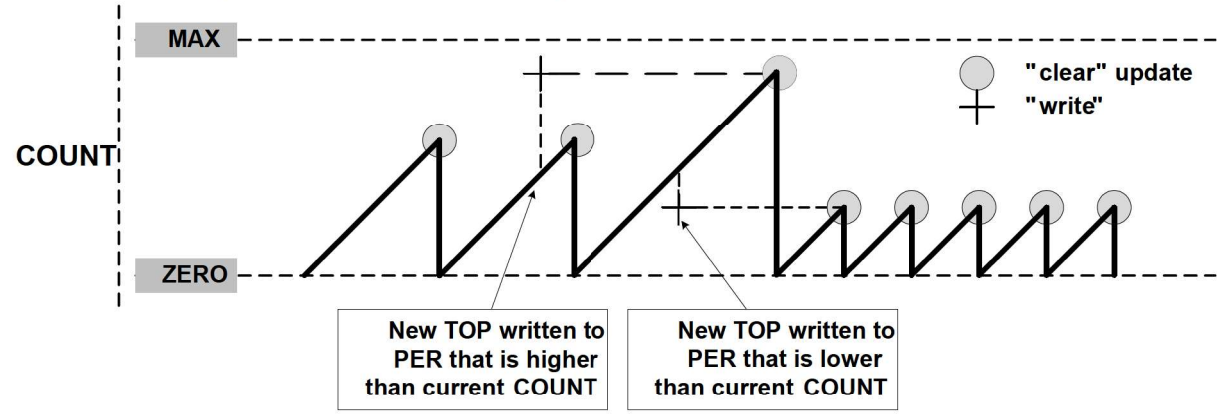

33.6.2.8 Capture Operations

To enable and use capture operations, the corresponding Capture Channel x Enable bit in the Control A register (CTRLA.CAPTENx) must be written to '1'.

A capture trigger can be provided by input event line TC_EV or by asynchronous IO pin WO[x] for each capture channel or by a TC event. To enable the capture from input event line, Event Input Enable bit in the Event Control register (EVCTRL.TCEI) must be written to '1'. To enable the capture from the IO pin, the Capture On Pin x Enable bit in CTRLA register (CTRLA.COPENx) must be written to '1'.

Notes:

1. The RETRIGGER, COUNT and START event actions are available only on an event from the Event System.
2. Event system channels must be configured to operate in asynchronous mode of operation when used for capture operations.

By default, a capture operation is done when a rising edge is detected on the input signal. Capture on falling edge is available, its activation is depending on the input source:

- When the channel is used with a IO pin, write a '1' to the corresponding Invert Enable bit in the Drive Control register (DRVCTRL.INVENx).
- When the channel is counting events from the Event System, write a '1' to the TC Event Input Invert Enable bit in Event Control register (EVCTRL.TCINV).

Figure 33-11. Capture Double Buffering

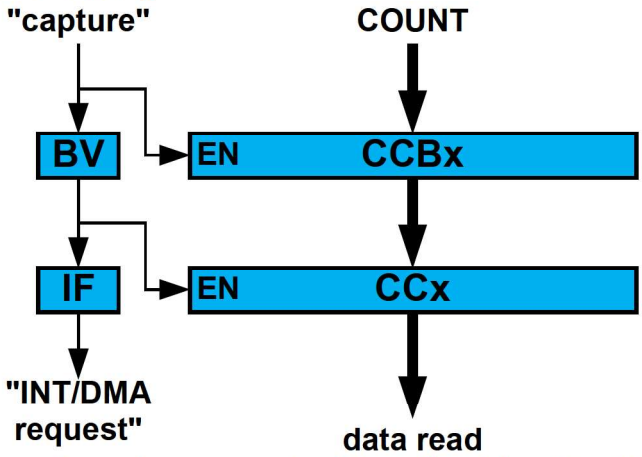

For input capture, the buffer register and the corresponding CCx act like a FIFO. When CCx is empty or read, any content in CCBUFx is transferred to CCx. The buffer valid flag is passed to set the CCx interrupt flag (IF) and generate the optional interrupt, event or DMA request. The CCBUFx register value can't be read, all captured data must be read from CCx register.

33.6.2.8.1 Event Capture Action

The compare/capture channels can be used as input capture channels to capture events from the Event System and give them a timestamp. The following figure shows four capture events for one capture channel.

Figure 33-12. Input Capture Timing

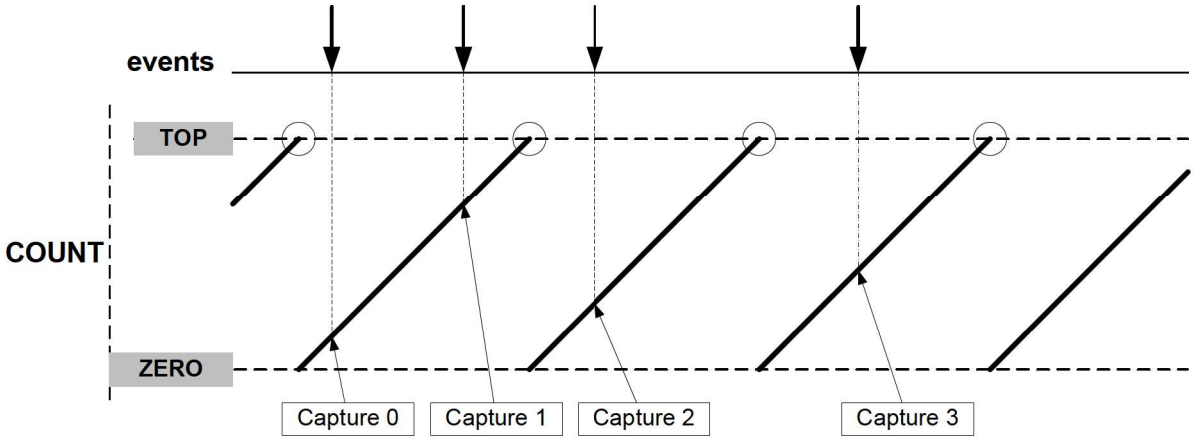

The TC can detect capture overflow of the input capture channels: When a new capture event is detected while the Capture Interrupt flag (INTFLAG.MCx) is still set, the new timestamp will not be stored and INTFLAG.ERR will be set.

33.6.2.8.2 Period and Pulse-Width (PPW) Capture Action

The TC can perform two input captures and restart the counter on one of the edges. This enables the TC to measure the pulse width and period and to characterize the frequency *f* and duty cycle of an input signal:

$$f = \frac{1}{T}$$

$$\text{dutyCycle} = \frac{t_p}{T}$$

Figure 33-13. PWP Capture

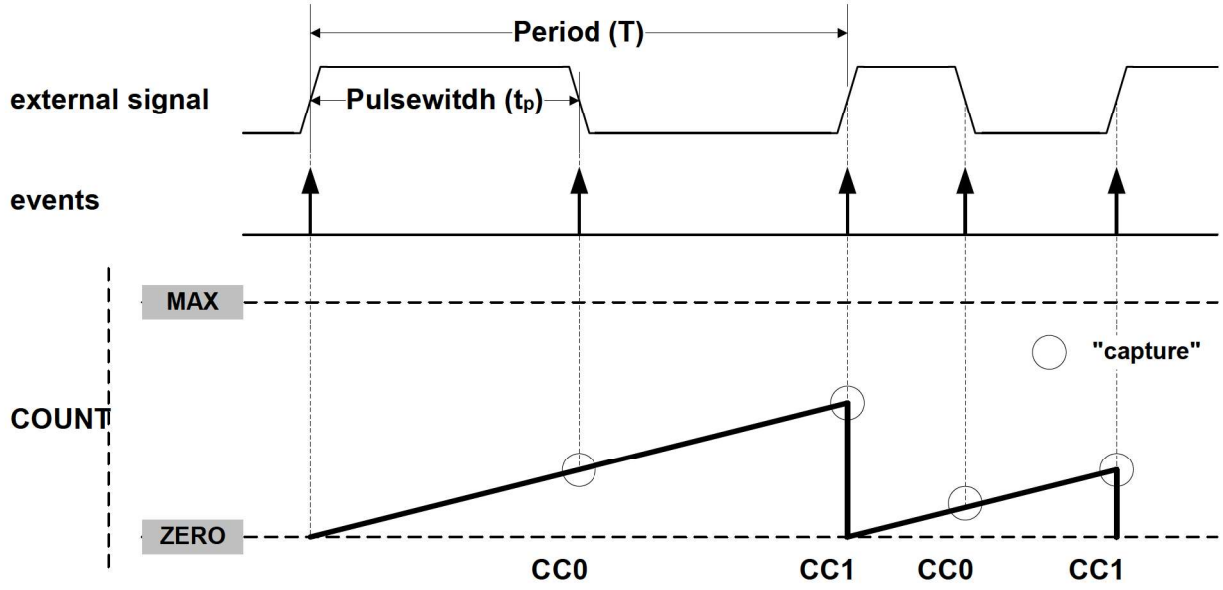

Selecting PWP in the Event Action bit group in the Event Control register (EVCTRL.EVACT) enables the TC to perform one capture action on the rising edge and the other one on the falling edge. The period *T* will be captured into CC1 and the pulse width t_p in CC0. EVCTRL.EVACT=PPW (period and pulse-width) offers identical functionality, but will capture *T* into CC0 and t_p into CC1.

The TC Event Input Invert Enable bit in the Event Control register (EVCTRL.TCINV) is used to select whether the wraparound should occur on the rising edge or the falling edge. If EVCTRL.TCINV=1, the wraparound will happen on the falling edge. In case pin capture is enabled, this can also be achieved by modifying the value of the DRVCTRL.INVENx bit.

The TC can detect capture overflow of the input capture channels: When a new capture event is detected while the Capture Interrupt flag (INTFLAG.MCx) is still set, the new timestamp will not be stored and INTFLAG.ERR will be set.

Note: The corresponding capture is working only if the channel is enabled in capture mode (CTRLA.CAPTENx=1). If not, the capture action is ignored and the channel is enabled in compare mode of operation. Consequently, both channels must be enabled in order to fully characterize the input.

33.6.2.8.3 Pulse-Width Capture Action

The TC performs the input capture on the falling edge of the input signal. When the edge is detected, the counter value is cleared and the TC stops counting. When a rising edge is detected on the input signal, the counter restarts the counting operation. To enable the operation on opposite edges, the input signal to capture must be inverted (refer to DRVCTRL.INVEN or EVCTRL.TCEINV).

Figure 33-14. Pulse-Width Capture on Channel 0

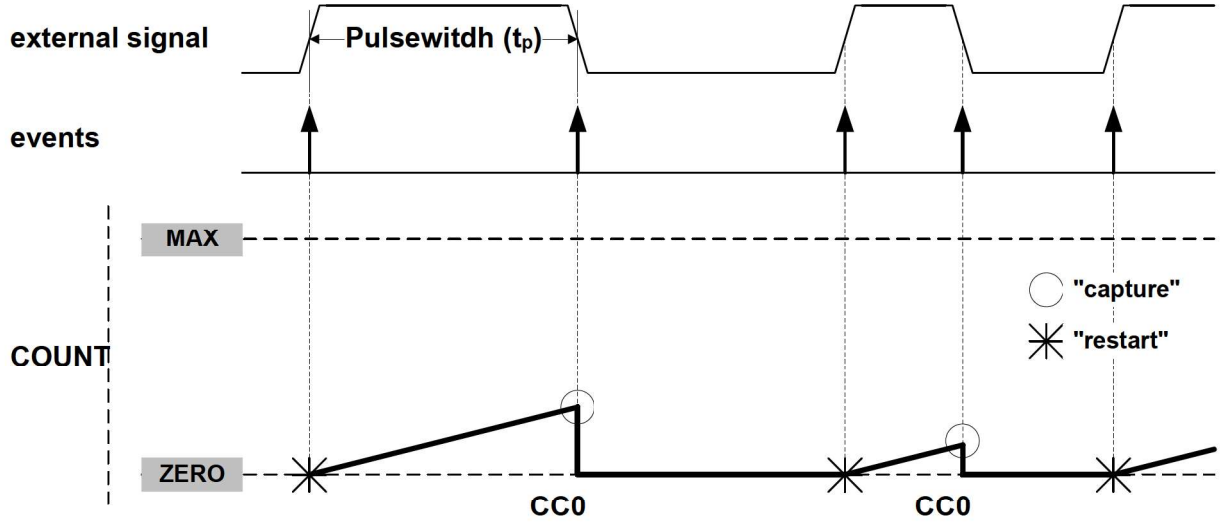

The TC can detect capture overflow of the input capture channels: When a new capture event is detected while the Capture Interrupt flag (INTFLAG.MCx) is still set, the new timestamp will not be stored and INTFLAG.ERR will be set.

33.6.3 Additional Features

33.6.3.1 One-Shot Operation

When one-shot is enabled, the counter automatically stops on the next counter overflow or underflow condition. When the counter is stopped, the Stop bit in the Status register (STATUS.STOP) is automatically set and the waveform outputs are set to zero.

One-shot operation is enabled by writing a '1' to the One-Shot bit in the Control B Set register (CTRLBSET.ONESHOT), and disabled by writing a '1' to CTRLBCLR.ONESHOT. When enabled, the TC will count until an overflow or underflow occurs and stops counting operation. The one-shot operation can be restarted by a re-trigger software command, a re-trigger event, or a start event. When the counter restarts its operation, STATUS.STOP is automatically cleared.

33.6.3.2 Time-Stamp Capture

This feature is enabled when the Capture Time Stamp (STAMP) Event Action in Event Control register (EVCTRL.EVACT) is selected. The counter TOP value must be smaller than MAX.

When a capture event is detected, the COUNT value is copied into the corresponding Channel x Compare/Capture Value (CCx) register. In case of an overflow, the MAX value is copied into the corresponding CCx register.

When a valid captured value is present in the capture channel register, the corresponding Capture Channel x Interrupt Flag (INTFLAG.MCx) is set.

The timer/counter can detect capture overflow of the input capture channels: When a new capture event is detected while the Capture Channel interrupt flag (INTFLAG.MCx) is still set, the new time-stamp will not be stored and INTFLAG.ERR will be set.

Figure 33-15. Time-Stamp

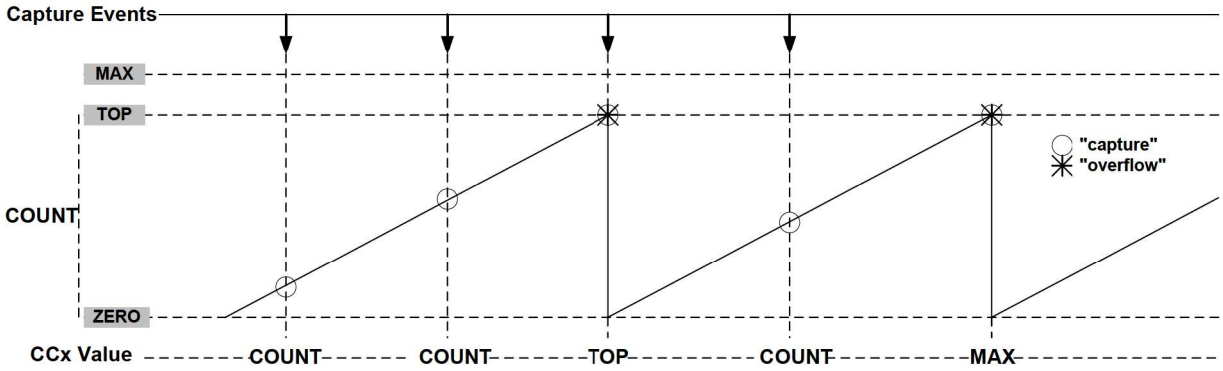

33.6.3.3 Minimum Capture

The minimum capture is enabled by writing the CAPTMIN mode in the Channel n Capture Mode bits in the Control A register (CTRLA.CAPTMODEn = CAPTMIN).

CCx Content:

In CAPTMIN operations, CCx keeps the Minimum captured values. Before enabling this mode of capture, the user must initialize the corresponding CCx register value to a value different from zero. If the CCx register initial value is zero, no captures will be performed using the corresponding channel.

MCx Behaviour:

In CAPTMIN operation, capture is performed only when on capture event time, the counter value is lower than the last captured value. The MCx interrupt flag is set only when on capture event time, the counter value is upper or equal to the value captured on the previous event. So interrupt flag is set when a new absolute local Minimum value has been detected.

33.6.3.4 Maximum Capture

The maximum capture is enabled by writing the CAPTMAX mode in the Channel n Capture Mode bits in the Control A register (CTRLA.CAPTMODEn = CAPTMAX).

CCx Content:

In CAPTMAX operations, CCx keeps the Maximum captured values. Before enabling this mode of capture, the user must initialize the corresponding CCx register value to a value different from TOP. If the CCx register initial value is TOP, no captures will be performed using the corresponding channel.

MCx Behaviour:

In CAPTMAX operation, capture is performed only when on capture event time, the counter value is upper than the last captured value. The MCx interrupt flag is set only when on capture event time, the counter value is lower or equal to the value captured on the previous event. So interrupt flag is set when a new absolute local Maximum value has been detected.

Figure 33-16. Maximum Capture Operation with CC0 Initialized with ZERO Value

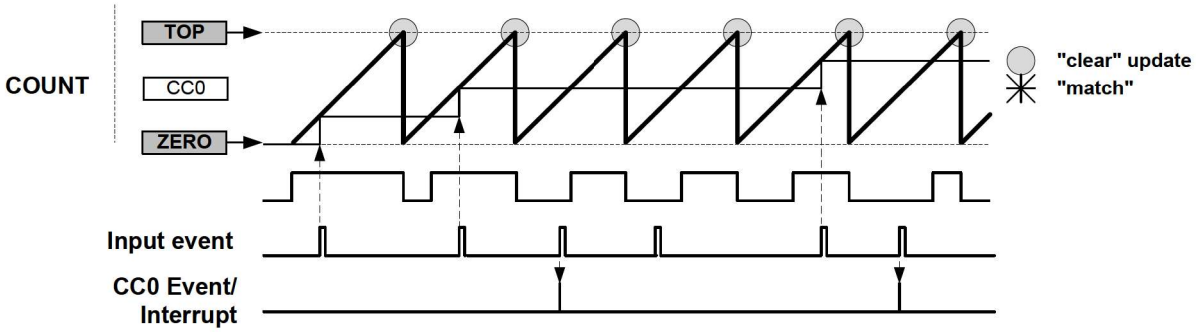

33.6.4 DMA Operation

The TC can generate the following DMA requests:

- Overflow (OVF): the request is set when an update condition (overflow, underflow or re-trigger) is detected, the request is cleared by hardware on DMA acknowledge.
- Match or Capture Channel x (MCx): for a compare channel, the request is set on each compare match detection, the request is cleared by hardware on DMA acknowledge. For a capture channel, the request is set when valid data is present in the CCx register, and cleared when CCx register is read.

33.6.5 Interrupts

The TC has the following interrupt sources:

- Overflow/Underflow (OVF)
- Match or Capture Channel x (MCx)
- Capture Overflow Error (ERR)

Each interrupt source has an interrupt flag associated with it. The interrupt flag in the Interrupt Flag Status and Clear register (INTFLAG) is set when the interrupt condition occurs.

Each interrupt can be individually enabled by writing a '1' to the corresponding bit in the Interrupt Enable Set register (INTENSET), and disabled by writing a '1' to the corresponding bit in the Interrupt Enable Clear register (INTENCLR). As both INTENSET and INTENCLR always reflect the same value, the status of interrupt enablement can be read from either register.

An interrupt request is generated when the interrupt flag is set and the corresponding interrupt is enabled. The interrupt request remains active until either the interrupt flag is cleared, the interrupt is disabled, or the TC is reset. See INTFLAG for details on how to clear interrupt flags.

The TC has one common interrupt request line for all the interrupt sources. The user must read the INTFLAG register to determine which interrupt condition is present.

Note that interrupts must be globally enabled for interrupt requests to be generated. Refer to 9.2 Nested Vector Interrupt Controller for details.

33.6.6 Events

The TC can generate the following output events:

- Overflow/Underflow (OVF)
- Match or Capture Channel x (MCx)

Writing a '1' to an Event Output bit in the Event Control register (EVCTRL.MCEOx) enables the corresponding output event. The output event is disabled by writing EVCTRL.MCEOx=0.

One of the following event actions can be selected by the Event Action bit group in the Event Control register (EVCTRL.EVACT):

- Disable event action (OFF)
- Start TC (START)
- Re-trigger TC (RETRIGGER)

  - If a re-trigger event occurs exactly at the time a Channel Compare Match occurs, the next waveform will be corrupted. To avoid this issue, use two channels to store two successive CC register values (n and n+1) and combine the related waveform outputs to provide signal redundancy.
- Count on event (COUNT)
- Capture time stamp (STAMP)
- Capture Period (PPW and PWP)
- Capture Pulse Width (PW)

Writing a '1' to the TC Event Input bit in the Event Control register (EVCTRL.TCEI) enables input events (EVU) to the TC. Writing a '0' to this bit disables input events to the TC. The TC requires only asynchronous event inputs. For additional information on how configuring the asynchronous events, refer to the 28. Event System (EVSYS).

33.6.7 Sleep Mode Operation

The TC can be configured to operate in any sleep mode. To be able to run in standby, the RUNSTDBY bit in the Control A register (CTRLA.RUNSTDBY) must be '1'. This peripheral can wake up the device from any sleep mode using interrupts or perform actions through the Event System.

If the On Demand bit in the Control A register (CTRLA.ONDEMAND) is written to '1', the module stops requesting its peripheral clock when the STOP bit in STATUS register (STATUS.STOP) is set to '1'. When a re-trigger or start condition is detected, the TC requests the clock before the operation starts.

When the device is in STANDBY sleep mode the DMA is not able to write the CTRLB, STATUS, COUNT, PER, PERBUF, CC, CCBUF registers. To write these registers with the DMA the device must be in Active mode or IDLE sleep mode.

33.6.8 Debug Operation

When the CPU is halted in Debug mode, this peripheral will halt normal operation. This peripheral can be forced to continue operation during debugging. Refer to the Debug Control (DBGCTRL) register for details.

33.6.9 Synchronization

Some registers (or bit fields within a register) require synchronization when read and/or written.

Synchronization is denoted by the "Read-Synchronized" (or "Read-Synchronized Bits”) and/or "Write-Synchronized" (or "Write-Synchronized Bits”) property in each individual register description.

For more details, refer to Register Synchronization.

33.7 Register Summary - 8-bit Mode

Offset	Name	Bit Pos.	7	6	5	4	3	2	1	0
0x00	CTRLA	7:0	ONDEMAND	RUNSTDBY	PRESCSYNC[1:0]		MODE[1:0]		ENABLE	SWRST
		15:8					ALOCK	PRESCALER[2:0]		
		23:16			COPEN1	COPEN0			CAPTEN1	CAPTEN0
		31:24				CAPTMODE1[1:0]			CAPTMODE0[1:0]	
0x04	CTRLBCLR	7:0	CMD[2:0]					ONESHOT	LUPD	DIR
0x05	CTRLBSET	7:0	CMD[2:0]					ONESHOT	LUPD	DIR
0x06	EVCTRL	7:0			TCEI	TCINV		EVACT[2:0]		
		15:8			MCEO1	MCEO0				OVFEO
0x08	INTENCLR	7:0			MC1	MC0			ERR	OVF
0x09	INTENSET	7:0			MC1	MC0			ERR	OVF
0x0A	INTFLAG	7:0			MC1	MC0			ERR	OVF
0x0B	STATUS	7:0			CCBUFV1	CCBUFV0	PERBUFV		SLAVE	STOP
0x0C	WAVE	7:0							WAVEGEN[1:0]	
0x0D	DRVCTRL	7:0							INVEN1	INVEN0
0x0E	Reserved									
0x0F	DBGCTRL	7:0								DBGRUN
0x10	SYNCBUSY	7:0	CC1	CC0	PER	COUNT	STATUS	CTRLB	ENABLE	SWRST
		15:8								
		23:16								
		31:24								
0x14	COUNT	7:0	COUNT[7:0]							
0x15 ... 0x1A	Reserved									
0x1B	PER	7:0	PER[7:0]							
0x1C	CC0	7:0	CC[7:0]							
0x1D	CC1	7:0	CC[7:0]							
0x1E ... 0x2E	Reserved									
0x2F	PERBUF	7:0	PERBUF[7:0]							
0x30	CCBUF0	7:0	CCBUF[7:0]							
0x31	CCBUF1	7:0	CCBUF[7:0]							

33.7.1 Control A

Name: CTRLA
Offset: 0x00
Reset: 0x00000000
Property: PAC Write-Protection, Write-Synchronized Bits, Enable-Protected Bits

Bit	31	30	29	28	27	26	25	24
				CAPTMODE1[1:0]			CAPTMODE0[1:0]	
Access				R/W	R/W		R/W	R/W
Reset				0	0		0	0

Bit	23	22	21	20	19	18	17	16
			COPEN1	COPEN0			CAPTEN1	CAPTEN0
Access			R/W	R/W			R/W	R/W
Reset			0	0			0	0

Bit	15	14	13	12	11	10	9	8
					ALOCK	PRESCALER[2:0]		
Access					R/W	R/W	R/W	R/W
Reset					0	0	0	0

Bit	7	6	5	4	3	2	1	0
	ONDEMAND	RUNSTDBY	PRESCSYNC[1:0]		MODE[1:0]		ENABLE	SWRST
Access	R/W	R/W	R/W	R/W	R/W	R/W	R/W	W
Reset	0	0	0	0	0	0	0	0

Bits 28:27 – CAPTMODE1[1:0] Capture mode Channel 1
These bits select the channel 1 capture mode.
Note: This bit field is enable-protected. This bit field is not synchronized.

Value	Name	Description
0x0	DEFAULT	Default capture
0x1	CAPTMIN	Minimum capture
0x2	CAPTMAX	Maximum capture
0x3		Reserved

Bits 25:24 – CAPTMODE0[1:0] Capture mode Channel 0
These bits select the channel 0 capture mode.
Note: This bit field is enable-protected. This bit field is not synchronized.

Value	Name	Description
0x0	DEFAULT	Default capture
0x1	CAPTMIN	Minimum capture
0x2	CAPTMAX	Maximum capture
0x3		Reserved

Bits 20, 21 – COPENx Capture On Pin x Enable [x = 1..0]
Bit x of COPEN[1:0] selects the trigger source for capture operation, either events or I/O pin input.
Note: This bit is enable-protected. This bit is not synchronized.

Value	Description
0	Event from Event System is selected as trigger source for capture operation on channel x.
1	I/O pin is selected as trigger source for capture operation on channel x.

Bits 16, 17 – CAPTENx Capture Channel x Enable [x = 1..0]
Bit x of CAPTEN[1:0] selects whether channel x is a capture or a compare channel.

Note: This bit is enable-protected. This bit is not synchronized.

Value	Description
0	CAPTEN disables capture on channel x.
1	CAPTEN enables capture on channel x.

Bit 11 – ALOCK Auto Lock
When this bit is set, Lock bit update (LUPD) is set to '1' on each overflow/underflow or re-trigger event.
Note: This bit is enable-protected. This bit is not synchronized.

Value	Description
0	The LUPD bit is not affected on overflow/underflow, and re-trigger event.
1	The LUPD bit is set on each overflow/underflow or re-trigger event.

Bits 10:8 – PRESCALER[2:0] Prescaler
These bits select the counter prescaler factor.
Note: This bit field is enable-protected. This bit field is not synchronized.

Value	Name	Description
0x0	DIV1	Prescaler: GCLK_TC
0x1	DIV2	Prescaler: GCLK_TC/2
0x2	DIV4	Prescaler: GCLK_TC/4
0x3	DIV8	Prescaler: GCLK_TC/8
0x4	DIV16	Prescaler: GCLK_TC/16
0x5	DIV64	Prescaler: GCLK_TC/64
0x6	DIV256	Prescaler: GCLK_TC/256
0x7	DIV1024	Prescaler: GCLK_TC/1024

Bit 7 – ONDEMAND Clock On Demand
This bit selects the clock requirements when the TC is stopped.
In standby mode, if the Run in Standby bit (CTRLA.RUNSTDBY) is '0', ONDEMAND is forced to '0'.
Note: This bit is enable-protected. This bit is not synchronized.

Value	Description
0	The On Demand is disabled. If On Demand is disabled, the TC will continue to request the clock when its operation is stopped (STATUS.STOP=1).
1	The On Demand is enabled. When On Demand is enabled, the stopped TC will not request the clock. The clock is requested when a software re-trigger command is applied or when an event with start/re-trigger action is detected.

Bit 6 – RUNSTDBY Run in Standby
This bit is used to keep the TC running in standby mode.
Note: This bit is enable-protected. This bit is not synchronized.

Value	Description
0	The TC is halted in standby.
1	The TC continues to run in standby.

Bits 5:4 – PRESCSYNC[1:0] Prescaler and Counter Synchronization
These bits select whether the counter should wrap around on the next GCLK_TCx clock or the next prescaled GCLK_TCx clock. It also makes it possible to reset the prescaler.
Note: This bit field is enable-protected. This bit field is not synchronized.

Value	Name	Description
0x0	GCLK	Reload or reset the counter on next generic clock
0x1	PRESC	Reload or reset the counter on next prescaler clock
0x2	RESYNC	Reload or reset the counter on next generic clock. Reset the prescaler counter
0x3	-	Reserved

Bits 3:2 – MODE[1:0] Timer Counter Mode
These bits select the counter mode.
Note: This bit field is enable-protected. This bit field is not synchronized.

Value	Name	Description
0x0	COUNT16	Counter in 16-bit mode
0x1	COUNT8	Counter in 8-bit mode
0x2	COUNT32	Counter in 32-bit mode
0x3	-	Reserved

Bit 1 – ENABLE Enable
Notes:

1. This bit is write-synchronized: SYNCBUSY.ENABLE must be checked to ensure the CTRLA.ENABLE synchronization is complete.
2. This bit is not enable protected.

Value	Description
0	The peripheral is disabled.
1	The peripheral is enabled.

Bit 0 – SWRST Software Reset
Writing a '0' to this bit has no effect.
Writing a '1' to this bit resets all registers in the TC, except DBGCTRL, to their initial state, and the TC will be disabled.
Writing a '1' to CTRLA.SWRST will always take precedence; all other writes in the same write-operation will be discarded.
Notes:

1. This bit is write-synchronized: SYNCBUSY.SWRST must be checked to ensure the CTRLA.SWRST synchronization is complete.
2. This bit is not enable protected.

Value	Description
0	There is no reset operation ongoing.
1	The reset operation is ongoing.

33.7.2 Control B Clear

Name: CTRLBCLR
Offset: 0x04
Reset: 0x00
Property: PAC Write-Protection, Read-Synchronized, Write-Synchronized

This register allows the user to clear bits in the CTRLB register without doing a read-modify-write operation. Changes in this register will also be reflected in the Control B Set register (CTRLBSET).

Note: This register is read- and write-synchronized: SYNCBUSY.CTRLB must be checked to ensure the CTRLBCLR register synchronization is complete.

Bit	7	6	5	4	3	2	1	0
	CMD[2:0]					ONESHOT	LUPD	DIR
Access	R/W	R/W	R/W			R/W	R/W	R/W
Reset	0	0	0			0	0	0

Bits 7:5 – CMD[2:0] Command
These bits are used for software control of the TC. The commands are executed on the next prescaled GCLK_TC clock cycle. When a command has been executed, the CMD bit group will be read back as zero.
Writing 0x0 to these bits has no effect.
Writing a value different from 0x0 to this bit field bits will clear the pending command.

Bit 2 – ONESHOT One-Shot on Counter
This bit controls one-shot operation of the TC.
Writing a '0' to this bit has no effect
Writing a '1' to this bit will disable one-shot operation.

Value	Description
0	The TC will wrap around and continue counting on an overflow/underflow condition.
1	The TC will wrap around and stop on the next underflow/overflow condition.

Bit 1 – LUPD Lock Update
This bit controls the update operation of the TC buffered registers.
When CTRLB.LUPD is set, no any update of the registers with value of its buffered register is performed on hardware UPDATE condition. Locking the update ensures that all buffer registers are valid before an hardware update is performed. After all the buffer registers are loaded correctly, the buffered registers can be unlocked.
This bit has no effect when input capture operation is enabled.
Writing a '0' to this bit has no effect.
Writing a '1' to this bit will clear the LUPD bit.

Value	Description
0	The CCBUFx and PERBUF buffer registers value are copied into CCx and PER registers on hardware update condition.
1	The CCBUFx and PERBUF buffer registers value are not copied into CCx and PER registers on hardware update condition.

Bit 0 – DIR Counter Direction
This bit is used to change the direction of the counter.
Writing a '0' to this bit has no effect.
Writing a '1' to this bit will clear the bit and make the counter count up.

Value	Description
0	The timer/counter is counting up (incrementing).
1	The timer/counter is counting down (decrementing).

33.7.3 Control B Set

Name: CTRLBSET
Offset: 0x05
Reset: 0x00
Property: PAC Write-Protection, Read-Synchronized, Write-Synchronized

This register allows the user to set bits in the CTRLB register without doing a read-modify-write operation. Changes in this register will also be reflected in the Control B Clear register (CTRLBCLR).

Note: This register is read- and write-synchronized: SYNCBUSY.CTRLB must be checked to ensure the CTRLBSET register synchronization is complete.

Bit	7	6	5	4	3	2	1	0
	CMD[2:0]					ONESHOT	LUPD	DIR
Access	R/W	R/W	R/W			R/W	R/W	R/W
Reset	0	0	0			0	0	0

Bits 7:5 – CMD[2:0] Command
These bits are used for software control of the TC. The commands are executed on the next prescaled GCLK_TC clock cycle. When a command has been executed, the CMD bit group will be read back as zero.
Writing 0x0 to these bits has no effect.
Writing a value different from 0x0 to these bits will issue a command for execution.



Important: This command requires synchronization before being executed. A valid sequence is:

- Issue CMD command (CTRLBSET.CMD = command)
- Wait for CMD synchronization (SYNCBUSY.CTRLB = 0)
- Wait for CMD read back as zero (CTRLBSET.CMD = 0)

Value	Name	Description
0x0	NONE	No action
0x1	RETRIGGER	Force a start, restart or retrigger
0x2	STOP	Force a stop
0x3	UPDATE	Force update of double buffered registers
0x4	READSYNC	Force a read synchronization of COUNT

Bit 2 – ONESHOT One-Shot on Counter
This bit controls one-shot operation of the TC.
Writing a '0' to this bit has no effect.
Writing a '1' to this bit will enable one-shot operation.

Value	Description
0	The TC will wrap around and continue counting on an overflow/underflow condition.
1	The TC will wrap around and stop on the next underflow/overflow condition.

Bit 1 – LUPD Lock Update
This bit controls the update operation of the TC buffered registers.
When CTRLB.LUPD is set, no any update of the registers with value of its buffered register is performed on hardware UPDATE condition. Locking the update ensures that all buffer registers are valid before an hardware update is performed. After all the buffer registers are loaded correctly, the buffered registers can be unlocked.
Writing a '0' to this bit has no effect.
Writing a '1' to this bit will set the LUPD bit.
This bit has no effect when input capture operation is enabled.

Value	Description
0	The CCBUFx and PERBUF buffer registers value are copied into CCx and PER registers on hardware update condition.

Value	Description
1	The CCBUFx and PERBUF buffer registers value are not copied into CCx and PER registers on hardware update condition.

Bit 0 – DIR Counter Direction
This bit is used to change the direction of the counter.
Writing a '0' to this bit has no effect
Writing a '1' to this bit will set the bit and make the counter count down.

Value	Description
0	The timer/counter is counting up (incrementing).
1	The timer/counter is counting down (decrementing).

33.7.4 Event Control

Name: EVCTRL
Offset: 0x06
Reset: 0x0000
Property: PAC Write-Protection, Enable-Protected

Bit	15	14	13	12	11	10	9	8
			MCEO1	MCEO0				OVFEO
Access			R/W	R/W				R/W
Reset			0	0				0

Bit	7	6	5	4	3	2	1	0
			TCEI	TCINV		EVACT[2:0]		
Access			R/W	R/W		R/W	R/W	R/W
Reset			0	0		0	0	0

Bits 12, 13 – MCEOx Match or Capture Channel x Event Output Enable [x = 1..0]
These bits enable the generation of an event for every match or capture on channel x.

Value	Description
0	Match/Capture event on channel x is disabled and will not be generated.
1	Match/Capture event on channel x is enabled and will be generated for every compare/capture.

Bit 8 – OVFEO Overflow/Underflow Event Output Enable
This bit enables the Overflow/Underflow event. When enabled, an event will be generated when the counter overflows/underflows.

Value	Description
0	Overflow/Underflow event is disabled and will not be generated.
1	Overflow/Underflow event is enabled and will be generated for every counter overflow/underflow.

Bit 5 – TCEI TC Event Enable
This bit is used to enable asynchronous input events to the TC.

Value	Description
0	Incoming events are disabled.
1	Incoming events are enabled.

Bit 4 – TCINV TC Inverted Event Input Polarity
This bit inverts the asynchronous input event source.

Value	Description
0	Input event source is not inverted.
1	Input event source is inverted.

Bits 2:0 – EVACT[2:0] Event Action
These bits define the event action the TC will perform on an event.

Value	Name	Description
0x0	OFF	Event action disabled
0x1	RETRIGGER	Start, restart or retrigger TC on event
0x2	COUNT	Count on event (not a valid selection for waveform generation)
0x3	START	Start TC on event
0x4	STAMP	Time stamp capture
0x5	PPW	Period captured in CC0, pulse width in CC1
0x6	PWP	Period captured in CC1, pulse width in CC0
0x7	PW	Pulse width capture

33.7.5 Interrupt Enable Clear

Name: INTENCLR
Offset: 0x08
Reset: 0x00
Property: PAC Write-Protection

This register allows the user to disable an interrupt without doing a read-modify-write operation. Changes in this register will also be reflected in the Interrupt Enable Set register (INTENSET).

Bit	7	6	5	4	3	2	1	0
			MC1	MC0			ERR	OVF
Access			R/W	R/W			R/W	R/W
Reset			0	0			0	0

Bits 4, 5 – MCx Match or Capture Channel x Interrupt Disable [x = 1..0]
Writing a '0' to these bits has no effect.
Writing a '1' to MCx will clear the corresponding Match or Capture Channel x Interrupt Enable bit, which disables the Match or Capture Channel x interrupt.

Value	Description
0	The Match or Capture Channel x interrupt is disabled.
1	The Match or Capture Channel x interrupt is enabled.

Bit 1 – ERR Error Interrupt Disable
Writing a '0' to this bit has no effect.
Writing a '1' to this bit will clear the Error Interrupt Enable bit, which disables the Error interrupt.

Value	Description
0	The Error interrupt is disabled.
1	The Error interrupt is enabled.

Bit 0 – OVF Overflow Interrupt Disable
Writing a '0' to this bit has no effect.
Writing a '1' to this bit will clear the Overflow Interrupt Enable bit, which disables the Overflow interrupt request.

Value	Description
0	The Overflow interrupt is disabled.
1	The Overflow interrupt is enabled.

33.7.6 Interrupt Enable Set

Name: INTENSET
Offset: 0x09
Reset: 0x00
Property: PAC Write-Protection

This register allows the user to enable an interrupt without doing a read-modify-write operation. Changes in this register will also be reflected in the Interrupt Enable Clear register (INTENCLR).

Bit	7	6	5	4	3	2	1	0
			MC1	MC0			ERR	OVF
Access			R/W	R/W			R/W	R/W
Reset			0	0			0	0

Bits 4, 5 – MCx Match or Capture Channel x Interrupt Enable [x = 1..0]
Writing a '0' to these bits has no effect.
Writing a '1' to MCx will set the corresponding Match or Capture Channel x Interrupt Enable bit, which enables the Match or Capture Channel x interrupt.

Value	Description
0	The Match or Capture Channel x interrupt is disabled.
1	The Match or Capture Channel x interrupt is enabled.

Bit 1 – ERR Error Interrupt Enable
Writing a '0' to this bit has no effect.
Writing a '1' to this bit will set the Error Interrupt Enable bit, which enables the Error interrupt.

Value	Description
0	The Error interrupt is disabled.
1	The Error interrupt is enabled.

Bit 0 – OVF Overflow Interrupt Enable
Writing a '0' to this bit has no effect.
Writing a '1' to this bit will set the Overflow Interrupt Enable bit, which enables the Overflow interrupt request.

Value	Description
0	The Overflow interrupt is disabled.
1	The Overflow interrupt is enabled.

33.7.7 Interrupt Flag Status and Clear

Name: INTFLAG
Offset: 0x0A
Reset: 0x00
Property: -

Bit	7	6	5	4	3	2	1	0
			MC1	MC0			ERR	OVF
Access			R/W	R/W			R/W	R/W
Reset			0	0			0	0

Bits 4, 5 – MCx Match or Capture Channel x Interrupt Flag [x = 1..0]
This flag is set on a comparison match, or when the corresponding CCx register contains a valid capture value. This flag will generate an interrupt request if the corresponding INTENCLR.MCx or INTENSET.MCx bit is '1'.
Writing a '0' to one of these bits has no effect.
Writing a '1' to one of these bits will clear the corresponding Match or Capture Channel x interrupt flag.
In capture operation, this flag is automatically cleared when CCx register is read.

Bit 1 – ERR Error Interrupt Flag
This flag is set when a new capture occurs on a channel while the corresponding Match or Capture Channel x interrupt flag is set, in which case there is nowhere to store the new capture.
Writing a '0' to this bit has no effect.
Writing a '1' to this bit clears the Error interrupt flag.

Bit 0 – OVF Overflow Interrupt Flag
This flag is set after an overflow condition occurs, and will generate an interrupt request if INTENCLR.OVF or INTENSET.OVF is '1'.
Writing a '0' to this bit has no effect.
Writing a '1' to this bit clears the Overflow interrupt flag.

33.7.8 Status

Name: STATUS
Offset: 0x0B
Reset: 0x01
Property: Read-Synchronized, Write-Synchronized

Note: This register is read- and write-synchronized: SYNCBUSY.STATUS must be checked to ensure the STATUS register synchronization is complete.

Bit	7	6	5	4	3	2	1	0
			CCBUFV1	CCBUFV0	PERBUFV		SLAVE	STOP
Access			R/W	R/W	R/W		R/W	R
Reset			0	0	0		0	1

Bits 4, 5 – CCBUFVx Channel x Compare or Capture Buffer Valid
For a compare channel x, the bit x is set when a new value is written to the corresponding CCBUFx register. The bit x is cleared by writing a '1' to it when CTRLB.LUPD is set, or it is cleared automatically by hardware on UPDATE condition. If clearing this bit manually to force an update of the PER register, it is necessary to clear the bit two times successively.
For a capture channel x, the bit x is set when a valid capture value is stored in the CCBUFx register. The bit x is cleared automatically when the CCx register is read.

Bit 3 – PERBUFV Period Buffer Valid
This bit is set when a new value is written to the PERBUF register. The bit is cleared by writing '1' to the corresponding location when CTRLB.LUPD is set, or automatically cleared by hardware on UPDATE condition. This bit is available only in 8-bit mode and will always read zero in 16- and 32-bit modes. If clearing this bit manually to force an update of the CCx register, it is necessary to clear the bit two times successively.

Bit 1 – SLAVE Slave Status Flag
This bit is only available in 32-bit mode on the slave TC (i.e., TC1 and/or TC3). The bit is set when the associated master TC (TC0 and TC2, respectively) is set to run in 32-bit mode.

Bit 0 – STOP Stop Status Flag
This bit is set when the TC is disabled, on a Stop command, or on an overflow/underflow condition when the One-Shot bit in the Control B Set register (CTRLBSET.ONESHOT) is '1'.

Value	Description
0	Counter is running.
1	Counter is stopped.

33.7.9 Waveform Generation Control

Name: WAVE
Offset: 0x0C
Reset: 0x00
Property: PAC Write-Protection, Enable-Protected

Bit	7	6	5	4	3	2	1	0
							WAVEGEN[1:0]	
Access							R/W	R/W
Reset							0	0

Bits 1:0 – WAVEGEN[1:0] Waveform Generation Mode
These bits select the waveform generation operation. They affect the top value, as shown in 33.6.2.6.1 Waveform Output Operations. They also control whether frequency or PWM waveform generation should be used. The waveform generation operations are explained in 33.6.2.6.1 Waveform Output Operations.
Note: This bit field is not synchronized.

Value	Name	Operation	Top Value	Output Waveform on Match	Output Waveform on Wraparound
0x0	NFRQ	Normal frequency	PER(1)/Max.	Toggle	No action
0x1	MFRQ	Match frequency	CC0	Toggle	Toggle
0x2	NPWM	Normal PWM	PER(1)/ Max.	Set	Clear
0x3	MPWM	Match PWM	CC0	Set	Clear

1) This depends on the TC mode: In 8-bit mode, the top value is the Period Value register (PER). In 16- and 32-bit mode it is the respective MAX value.

33.7.10 Driver Control

Name: DRVCTRL
Offset: 0x0D
Reset: 0x00
Property: PAC Write-Protection, Enable-Protected

Bit	7	6	5	4	3	2	1	0
							INVEN1	INVEN0
Access							R/W	R/W
Reset							0	0

Bits 0, 1 – INVENx Output Waveform x Invert Enable [x = 1..0]
The INVENx bit selects inversion of the output or capture trigger input of channel x.

Value	Description
0	Disable inversion of the WO[x] output and IO input pin.
1	Enable inversion of the WO[x] output and IO input pin.

33.7.11 Debug Control

Name: DBGCTRL
Offset: 0x0F
Reset: 0x00
Property: PAC Write-Protection

Bit	7	6	5	4	3	2	1	0
								DBGRUN
Access								R/W
Reset								0

Bit 0 – DBGRUN Run in Debug Mode
This bit is affected by a software system Reset, and should not be changed by software while the TC is enabled.

Value	Description
0	The TC is halted when the device is halted in debug mode.
1	The TC continues normal operation when the device is halted in debug mode.

33.7.12 Synchronization Busy

Name: SYNCBUSY
Offset: 0x10
Reset: 0x00000000
Property: -

Bit	31	30	29	28	27	26	25	24
Access								
Reset								

Bit	23	22	21	20	19	18	17	16
Access								
Reset								

Bit	15	14	13	12	11	10	9	8
Access								
Reset								

Bit	7	6	5	4	3	2	1	0
	CC1	CC0	PER	COUNT	STATUS	CTRLB	ENABLE	SWRST
Access	R	R	R	R	R	R	R	R
Reset	0	0	0	0	0	0	0	0

Bits 6, 7 – CCx Compare/Capture Channel x Synchronization Busy [x = 1..0]
For details on CC channels number, refer to each TC feature list.
This bit is set when the synchronization of CCx between clock domains is started.
This bit is also set when the CCBUFx is written, and cleared on update condition. The bit is automatically cleared when the STATUS.CCBUFx bit is cleared.
This bit is cleared when the synchronization of CCx between the clock domains is complete.

Bit 5 – PER PER Synchronization Busy
This bit is cleared when the synchronization of PER between the clock domains is complete.
This bit is set when the synchronization of PER between clock domains is started.
This bit is also set when the PERBUF is written, and cleared on update condition. The bit is automatically cleared when the STATUS.PERBUF bit is cleared.

Bit 4 – COUNT COUNT Synchronization Busy
This bit is cleared when the synchronization of COUNT between the clock domains is complete.
This bit is set when the synchronization of COUNT between clock domains is started.

Bit 3 – STATUS STATUS Synchronization Busy
This bit is cleared when the synchronization of STATUS between the clock domains is complete.
This bit is set when a '1' is written to the Capture Channel Buffer Valid status flags (STATUS.CCBUFVx) and the synchronization of STATUS between clock domains is started.

Bit 2 – CTRLB CTRLB Synchronization Busy
This bit is cleared when the synchronization of CTRLBSET or CTRLBCLR between the clock domains is complete.
This bit is set when the synchronization of CTRLBSET or CTRLBCLR between clock domains is started.

Bit 1 – ENABLE ENABLE Synchronization Busy
This bit is cleared when the synchronization of ENABLE bit between the clock domains is complete.
This bit is set when the synchronization of ENABLE bit between clock domains is started.

Bit 0 – SWRST SWRST Synchronization Busy
This bit is cleared when the synchronization of SWRST bit between the clock domains is complete.
This bit is set when the synchronization of SWRST bit between clock domains is started.

33.7.13 Counter Value, 8-bit Mode

Name: COUNT
Offset: 0x14
Reset: 0x0000
Property: PAC Write-Protection, Write-Synchronized, Read-Synchronized

Notes:

1. This register is read-synchronized: Prior to any read access, this register must be synchronized by user by writing the according TC Command value to the Control B Set register (CTRLBSET.CMD=READSYNC).
2. This register is write-synchronized: SYNCBUSY.COUNT must be checked to ensure the COUNT register synchronization is complete.

Bit	7	6	5	4	3	2	1	0
	COUNT[7:0]							
Access	R/W	R/W	R/W	R/W	R/W	R/W	R/W	R/W
Reset	0	0	0	0	0	0	0	0

Bits 7:0 – COUNT[7:0] Counter Value
These bits contain the current counter value.

33.7.14 Period Value, 8-bit Mode

Name: PER
Offset: 0x1B
Reset: 0xFF
Property: Write-Synchronized

Note: This register is write-synchronized: SYNCBUSY.PER must be checked to ensure the PER register synchronization is complete.

Bit	7	6	5	4	3	2	1	0
	PER[7:0]							
Access	R/W	R/W	R/W	R/W	R/W	R/W	R/W	R/W
Reset	1	1	1	1	1	1	1	1

Bits 7:0 – PER[7:0] Period Value
These bits hold the value of the TC period count.

33.7.15 Channel x Compare/Capture Value, 8-bit Mode

Name: CCx
Offset: 0x1C + x*0x01 [x=0..1]
Reset: 0x00
Property: Write-Synchronized, Read-Synchronized

Note: This register is write-synchronized: SYNCBUSY.CCx must be checked to ensure the CCx register synchronization is complete.

Bit	7	6	5	4	3	2	1	0
	CC[7:0]							
Access	R/W	R/W	R/W	R/W	R/W	R/W	R/W	R/W
Reset	0	0	0	0	0	0	0	0

Bits 7:0 – CC[7:0] Channel x Compare/Capture Value
These bits contain the compare/capture value in 8-bit TC mode. In Match frequency (MFRQ) or Match PWM (MPWM) waveform operation (WAVE.WAVEGEN), the CC0 register is used as a period register.

33.7.16 Period Buffer Value, 8-bit Mode

Name: PERBUF
Offset: 0x2F
Reset: 0xFF
Property: Write-Synchronized

Note: This register is write-synchronized: SYNCBUSY.PER must be checked to ensure the PER register synchronization is complete.

Bit	7	6	5	4	3	2	1	0
	PERBUF[7:0]							
Access	R/W	R/W	R/W	R/W	R/W	R/W	R/W	R/W
Reset	1	1	1	1	1	1	1	1

Bits 7:0 – PERBUF[7:0] Period Buffer Value
These bits hold the value of the period buffer register. The value is copied to PER register on UPDATE condition.

33.7.17 Channel x Compare Buffer Value, 8-bit Mode

Name: CCBUFx
Offset: 0x30 + x*0x01 [x=0..1]
Reset: 0x00
Property: Write-Synchronized

Note: This register is write-synchronized: SYNCBUSY.CCx must be checked to ensure the CCx register synchronization is complete.

Bit	7	6	5	4	3	2	1	0
	CCBUF[7:0]							
Access	R/W	R/W	R/W	R/W	R/W	R/W	R/W	R/W
Reset	0	0	0	0	0	0	0	0

Bits 7:0 – CCBUF[7:0] Channel x Compare Buffer Value
These bits hold the value of the Channel x Compare Buffer Value. When the buffer valid flag is '1' and double buffering is enabled (CTRLBCLR.LUPD=1), the data from buffer registers will be copied into the corresponding CCx register under UPDATE condition, including the software update command (CTRLBSET.CMD=0x3).

33.8 Register Summary - 16-bit Mode

Offset	Name	Bit Pos.	7	6	5	4	3	2	1	0
0x00	CTRLA	7:0	ONDEMAND	RUNSTDBY	PRESCSYNC[1:0]		MODE[1:0]		ENABLE	SWRST
		15:8					ALOCK	PRESCALER[2:0]		
		23:16			COPEN1	COPEN0			CAPTEN1	CAPTEN0
		31:24				CAPTMODE1[1:0]			CAPTMODE0[1:0]	
0x04	CTRLBCLR	7:0	CMD[2:0]					ONESHOT	LUPD	DIR
0x05	CTRLBSET	7:0	CMD[2:0]					ONESHOT	LUPD	DIR
0x06	EVCTRL	7:0			TCEI	TCINV		EVACT[2:0]		
		15:8			MCEO1	MCEO0				OVFEO
0x08	INTENCLR	7:0			MC1	MC0			ERR	OVF
0x09	INTENSET	7:0			MC1	MC0			ERR	OVF
0x0A	INTFLAG	7:0			MC1	MC0			ERR	OVF
0x0B	STATUS	7:0			CCBUFV1	CCBUFV0			SLAVE	STOP
0x0C	WAVE	7:0							WAVEGEN[1:0]	
0x0D	DRVCTRL	7:0							INVEN1	INVEN0
0x0E	Reserved									
0x0F	DBGCTRL	7:0								DBGRUN
0x10	SYNCBUSY	7:0	CC1	CC0		COUNT	STATUS	CTRLB	ENABLE	SWRST
		15:8								
		23:16								
		31:24								
0x14	COUNT	7:0	COUNT[7:0]							
		15:8	COUNT[15:8]							
0x16 ... 0x1B	Reserved									
0x1C	CC0	7:0	CC[7:0]							
		15:8	CC[15:8]							
0x1E	CC1	7:0	CC[7:0]							
		15:8	CC[15:8]							
0x20 ... 0x2F	Reserved									
0x30	CCBUF0	7:0	CCBUF[7:0]							
		15:8	CCBUF[15:8]							
0x32	CCBUF1	7:0	CCBUF[7:0]							
		15:8	CCBUF[15:8]							

33.8.1 Control A

Name: CTRLA
Offset: 0x00
Reset: 0x00000000
Property: PAC Write-Protection, Write-Synchronized Bits, Enable-Protected Bits

Bit	31	30	29	28	27	26	25	24
				CAPTMODE1[1:0]			CAPTMODE0[1:0]	
Access				R/W	R/W		R/W	R/W
Reset				0	0		0	0

Bit	23	22	21	20	19	18	17	16
			COPEN1	COPEN0			CAPTEN1	CAPTEN0
Access			R/W	R/W			R/W	R/W
Reset			0	0			0	0

Bit	15	14	13	12	11	10	9	8
					ALOCK	PRESCALER[2:0]		
Access					R/W	R/W	R/W	R/W
Reset					0	0	0	0

Bit	7	6	5	4	3	2	1	0
	ONDEMAND	RUNSTDBY	PRESCSYNC[1:0]		MODE[1:0]		ENABLE	SWRST
Access	R/W	R/W	R/W	R/W	R/W	R/W	R/W	W
Reset	0	0	0	0	0	0	0	0

Bits 28:27 – CAPTMODE1[1:0] Capture mode Channel 1
These bits select the channel 1 capture mode.
Note: This bit field is enable-protected. This bit field is not synchronized.

Value	Name	Description
0x0	DEFAULT	Default capture
0x1	CAPTMIN	Minimum capture
0x2	CAPTMAX	Maximum capture
0x3		Reserved

Bits 25:24 – CAPTMODE0[1:0] Capture mode Channel 0
These bits select the channel 0 capture mode.
Note: This bit field is enable-protected. This bit field is not synchronized.

Value	Name	Description
0x0	DEFAULT	Default capture
0x1	CAPTMIN	Minimum capture
0x2	CAPTMAX	Maximum capture
0x3		Reserved

Bits 20, 21 – COPENx Capture On Pin x Enable [x = 1..0]
Bit x of COPEN[1:0] selects the trigger source for capture operation, either events or I/O pin input.
Note: This bit is enable-protected. This bit is not synchronized.

Value	Description
0	Event from Event System is selected as trigger source for capture operation on channel x.
1	I/O pin is selected as trigger source for capture operation on channel x.

Bits 16, 17 – CAPTENx Capture Channel x Enable [x = 1..0]
Bit x of CAPTEN[1:0] selects whether channel x is a capture or a compare channel.

Note: This bit is enable-protected. This bit is not synchronized.

Value	Description
0	CAPTEN disables capture on channel x.
1	CAPTEN enables capture on channel x.

Bit 11 – ALOCK Auto Lock
When this bit is set, Lock bit update (LUPD) is set to '1' on each overflow/underflow or re-trigger event.
Note: This bit is enable-protected. This bit is not synchronized.

Value	Description
0	The LUPD bit is not affected on overflow/underflow, and re-trigger event.
1	The LUPD bit is set on each overflow/underflow or re-trigger event.

Bits 10:8 – PRESCALER[2:0] Prescaler
These bits select the counter prescaler factor.
Note: This bit field is enable-protected. This bit field is not synchronized.

Value	Name	Description
0x0	DIV1	Prescaler: GCLK_TC
0x1	DIV2	Prescaler: GCLK_TC/2
0x2	DIV4	Prescaler: GCLK_TC/4
0x3	DIV8	Prescaler: GCLK_TC/8
0x4	DIV16	Prescaler: GCLK_TC/16
0x5	DIV64	Prescaler: GCLK_TC/64
0x6	DIV256	Prescaler: GCLK_TC/256
0x7	DIV1024	Prescaler: GCLK_TC/1024

Bit 7 – ONDEMAND Clock On Demand
This bit selects the clock requirements when the TC is stopped.
In Standby mode, if the Run in Standby bit (CTRLA.RUNSTDBY) is '0', ONDEMAND is forced to '0'.
Note: This bit is enable-protected. This bit is not synchronized.

Value	Description
0	The On Demand is disabled. If On Demand is disabled, the TC will continue to request the clock when its operation is stopped (STATUS.STOP=1).
1	The On Demand is enabled. When On Demand is enabled, the stopped TC will not request the clock. The clock is requested when a software re-trigger command is applied or when an event with start/re-trigger action is detected.

Bit 6 – RUNSTDBY Run in Standby
This bit is used to keep the TC running in standby mode.
Note: This bit is enable-protected. This bit is not synchronized.

Value	Description
0	The TC is halted in standby.
1	The TC continues to run in standby.

Bits 5:4 – PRESCSYNC[1:0] Prescaler and Counter Synchronization
These bits select whether the counter should wrap around on the next GCLK_TCx clock or the next prescaled GCLK_TCx clock. It also makes it possible to reset the prescaler.
Note: This bit field is enable-protected. This bit field is not synchronized.

Value	Name	Description
0x0	GCLK	Reload or reset the counter on next generic clock
0x1	PRESC	Reload or reset the counter on next prescaler clock
0x2	RESYNC	Reload or reset the counter on next generic clock. Reset the prescaler counter
0x3	-	Reserved

Bits 3:2 – MODE[1:0] Timer Counter Mode
These bits select the counter mode.
Note: This bit field is enable-protected. This bit field is not synchronized.

Value	Name	Description
0x0	COUNT16	Counter in 16-bit mode
0x1	COUNT8	Counter in 8-bit mode
0x2	COUNT32	Counter in 32-bit mode
0x3	-	Reserved

Bit 1 – ENABLE Enable
Notes:

1. This bit is write-synchronized: SYNCBUSY.ENABLE must be checked to ensure the CTRLA.ENABLE synchronization is complete.
2. This bit is not enable protected.

Value	Description
0	The peripheral is disabled.
1	The peripheral is enabled.

Bit 0 – SWRST Software Reset
Writing a '0' to this bit has no effect.
Writing a '1' to this bit resets all registers in the TC, except DBGCTRL, to their initial state, and the TC will be disabled.
Writing a '1' to CTRLA.SWRST will always take precedence; all other writes in the same write-operation will be discarded.
Notes:

1. This bit is write-synchronized: SYNCBUSY.SWRST must be checked to ensure the CTRLA.SWRST synchronization is complete.
2. This bit is not enable protected.

Value	Description
0	There is no reset operation ongoing.
1	The reset operation is ongoing.

33.8.2 Control B Clear

Name: CTRLBCLR
Offset: 0x04
Reset: 0x00
Property: PAC Write-Protection, Read-Synchronized, Write-Synchronized

This register allows the user to clear bits in the CTRLB register without doing a read-modify-write operation. Changes in this register will also be reflected in the Control B Set register (CTRLBSET).

Note: This register is read- and write-synchronized: SYNCBUSY.CTRLB must be checked to ensure the CTRLBCLR register synchronization is complete.

Bit	7	6	5	4	3	2	1	0
	CMD[2:0]					ONESHOT	LUPD	DIR
Access	R/W	R/W	R/W			R/W	R/W	R/W
Reset	0	0	0			0	0	0

Bits 7:5 – CMD[2:0] Command
These bits are used for software control of the TC. The commands are executed on the next prescaled GCLK_TC clock cycle. When a command has been executed, the CMD bit group will be read back as zero.
Writing 0x0 to these bits has no effect.
Writing a value different from 0x0 to this bit field bits will clear the pending command.

Bit 2 – ONESHOT One-Shot on Counter
This bit controls one-shot operation of the TC.
Writing a '0' to this bit has no effect
Writing a '1' to this bit will disable one-shot operation.

Value	Description
0	The TC will wrap around and continue counting on an overflow/underflow condition.
1	The TC will wrap around and stop on the next underflow/overflow condition.

Bit 1 – LUPD Lock Update
This bit controls the update operation of the TC buffered registers.
When CTRLB.LUPD is set, no any update of the registers with value of its buffered register is performed on hardware UPDATE condition. Locking the update ensures that all buffer registers are valid before an hardware update is performed. After all the buffer registers are loaded correctly, the buffered registers can be unlocked.
This bit has no effect when input capture operation is enabled.
Writing a '0' to this bit has no effect.
Writing a '1' to this bit will clear the LUPD bit.

Value	Description
0	The CCBUFx and PERBUF buffer registers value are copied into CCx and PER registers on hardware update condition.
1	The CCBUFx and PERBUF buffer registers value are not copied into CCx and PER registers on hardware update condition.

Bit 0 – DIR Counter Direction
This bit is used to change the direction of the counter.
Writing a '0' to this bit has no effect.
Writing a '1' to this bit will clear the bit and make the counter count up.

Value	Description
0	The timer/counter is counting up (incrementing).
1	The timer/counter is counting down (decrementing).

33.8.3 Control B Set

Name: CTRLBSET
Offset: 0x05
Reset: 0x00
Property: PAC Write-Protection, Read-Synchronized, Write-Synchronized

This register allows the user to set bits in the CTRLB register without doing a read-modify-write operation. Changes in this register will also be reflected in the Control B Clear register (CTRLBCLR).

Note: This register is read- and write-synchronized: SYNCBUSY.CTRLB must be checked to ensure the CTRLBSET register synchronization is complete.

Bit	7	6	5	4	3	2	1	0
	CMD[2:0]					ONESHOT	LUPD	DIR
Access	R/W	R/W	R/W			R/W	R/W	R/W
Reset	0	0	0			0	0	0

Bits 7:5 – CMD[2:0] Command
These bits are used for software control of the TC. The commands are executed on the next prescaled GCLK_TC clock cycle. When a command has been executed, the CMD bit group will be read back as zero.
Writing 0x0 to these bits has no effect.
Writing a value different from 0x0 to these bits will issue a command for execution.



Important: This command requires synchronization before being executed. A valid sequence is:

- Issue CMD command (CTRLBSET.CMD = command)
- Wait for CMD synchronization (SYNCBUSY.CTRLB = 0)
- Wait for CMD read back as zero (CTRLBSET.CMD = 0)

Value	Name	Description
0x0	NONE	No action
0x1	RETRIGGER	Force a start, restart or retrigger
0x2	STOP	Force a stop
0x3	UPDATE	Force update of double buffered registers
0x4	READSYNC	Force a read synchronization of COUNT

Bit 2 – ONESHOT One-Shot on Counter
This bit controls one-shot operation of the TC.
Writing a '0' to this bit has no effect.
Writing a '1' to this bit will enable one-shot operation.

Value	Description
0	The TC will wrap around and continue counting on an overflow/underflow condition.
1	The TC will wrap around and stop on the next underflow/overflow condition.

Bit 1 – LUPD Lock Update
This bit controls the update operation of the TC buffered registers.
When CTRLB.LUPD is set, no any update of the registers with value of its buffered register is performed on hardware UPDATE condition. Locking the update ensures that all buffer registers are valid before an hardware update is performed. After all the buffer registers are loaded correctly, the buffered registers can be unlocked.
Writing a '0' to this bit has no effect.
Writing a '1' to this bit will set the LUPD bit.
This bit has no effect when input capture operation is enabled.

Value	Description
0	The CCBUFx and PERBUF buffer registers value are copied into CCx and PER registers on hardware update condition.

Value	Description
1	The CCBUFx and PERBUF buffer registers value are not copied into CCx and PER registers on hardware update condition.

Bit 0 – DIR Counter Direction
This bit is used to change the direction of the counter.
Writing a '0' to this bit has no effect
Writing a '1' to this bit will set the bit and make the counter count down.

Value	Description
0	The timer/counter is counting up (incrementing).
1	The timer/counter is counting down (decrementing).

33.8.4 Event Control

Name: EVCTRL
Offset: 0x06
Reset: 0x0000
Property: PAC Write-Protection, Enable-Protected

Bit	15	14	13	12	11	10	9	8
			MCEO1	MCEO0				OVFEO
Access			R/W	R/W				R/W
Reset			0	0				0

Bit	7	6	5	4	3	2	1	0
			TCEI	TCINV		EVACT[2:0]		
Access			R/W	R/W		R/W	R/W	R/W
Reset			0	0		0	0	0

Bits 12, 13 – MCEOx Match or Capture Channel x Event Output Enable [x = 1..0]
These bits enable the generation of an event for every match or capture on channel x.

Value	Description
0	Match/Capture event on channel x is disabled and will not be generated.
1	Match/Capture event on channel x is enabled and will be generated for every compare/capture.

Bit 8 – OVFEO Overflow/Underflow Event Output Enable
This bit enables the Overflow/Underflow event. When enabled, an event will be generated when the counter overflows/underflows.

Value	Description
0	Overflow/Underflow event is disabled and will not be generated.
1	Overflow/Underflow event is enabled and will be generated for every counter overflow/underflow.

Bit 5 – TCEI TC Event Enable
This bit is used to enable asynchronous input events to the TC.

Value	Description
0	Incoming events are disabled.
1	Incoming events are enabled.

Bit 4 – TCINV TC Inverted Event Input Polarity
This bit inverts the asynchronous input event source.

Value	Description
0	Input event source is not inverted.
1	Input event source is inverted.

Bits 2:0 – EVACT[2:0] Event Action
These bits define the event action the TC will perform on an event.

Value	Name	Description
0x0	OFF	Event action disabled
0x1	RETRIGGER	Start, restart or retrigger TC on event
0x2	COUNT	Count on event (not a valid selection for waveform generation)
0x3	START	Start TC on event
0x4	STAMP	Time stamp capture
0x5	PPW	Period captured in CC0, pulse width in CC1
0x6	PWP	Period captured in CC1, pulse width in CC0
0x7	PW	Pulse width capture

33.8.5 Interrupt Enable Clear

Name: INTENCLR
Offset: 0x08
Reset: 0x00
Property: PAC Write-Protection

This register allows the user to disable an interrupt without doing a read-modify-write operation. Changes in this register will also be reflected in the Interrupt Enable Set register (INTENSET).

Bit	7	6	5	4	3	2	1	0
			MC1	MC0			ERR	OVF
Access			R/W	R/W			R/W	R/W
Reset			0	0			0	0

Bits 4, 5 – MCx Match or Capture Channel x Interrupt Disable [x = 1..0]
Writing a '0' to these bits has no effect.
Writing a '1' to MCx will clear the corresponding Match or Capture Channel x Interrupt Enable bit, which disables the Match or Capture Channel x interrupt.

Value	Description
0	The Match or Capture Channel x interrupt is disabled.
1	The Match or Capture Channel x interrupt is enabled.

Bit 1 – ERR Error Interrupt Disable
Writing a '0' to this bit has no effect.
Writing a '1' to this bit will clear the Error Interrupt Enable bit, which disables the Error interrupt.

Value	Description
0	The Error interrupt is disabled.
1	The Error interrupt is enabled.

Bit 0 – OVF Overflow Interrupt Disable
Writing a '0' to this bit has no effect.
Writing a '1' to this bit will clear the Overflow Interrupt Enable bit, which disables the Overflow interrupt request.

Value	Description
0	The Overflow interrupt is disabled.
1	The Overflow interrupt is enabled.

33.8.6 Interrupt Enable Set

Name: INTENSET
Offset: 0x09
Reset: 0x00
Property: PAC Write-Protection

This register allows the user to enable an interrupt without doing a read-modify-write operation. Changes in this register will also be reflected in the Interrupt Enable Clear register (INTENCLR).

Bit	7	6	5	4	3	2	1	0
			MC1	MC0			ERR	OVF
Access			R/W	R/W			R/W	R/W
Reset			0	0			0	0

Bits 4, 5 – MCx Match or Capture Channel x Interrupt Enable [x = 1..0]
Writing a '0' to these bits has no effect.
Writing a '1' to MCx will set the corresponding Match or Capture Channel x Interrupt Enable bit, which enables the Match or Capture Channel x interrupt.

Value	Description
0	The Match or Capture Channel x interrupt is disabled.
1	The Match or Capture Channel x interrupt is enabled.

Bit 1 – ERR Error Interrupt Enable
Writing a '0' to this bit has no effect.
Writing a '1' to this bit will set the Error Interrupt Enable bit, which enables the Error interrupt.

Value	Description
0	The Error interrupt is disabled.
1	The Error interrupt is enabled.

Bit 0 – OVF Overflow Interrupt Enable
Writing a '0' to this bit has no effect.
Writing a '1' to this bit will set the Overflow Interrupt Enable bit, which enables the Overflow interrupt request.

Value	Description
0	The Overflow interrupt is disabled.
1	The Overflow interrupt is enabled.

33.8.7 Interrupt Flag Status and Clear

Name: INTFLAG
Offset: 0x0A
Reset: 0x00
Property: -

Bit	7	6	5	4	3	2	1	0
			MC1	MC0			ERR	OVF
Access			R/W	R/W			R/W	R/W
Reset			0	0			0	0

Bits 4, 5 – MCx Match or Capture Channel x Interrupt Flag [x = 1..0]
This flag is set on a comparison match, or when the corresponding CCx register contains a valid capture value. This flag will generate an interrupt request if the corresponding INTENCLR.MCx or INTENSET.MCx bit is '1'.
Writing a '0' to one of these bits has no effect.
Writing a '1' to one of these bits will clear the corresponding Match or Capture Channel x interrupt flag.
In capture operation, this flag is automatically cleared when CCx register is read.

Bit 1 – ERR Error Interrupt Flag
This flag is set when a new capture occurs on a channel while the corresponding Match or Capture Channel x interrupt flag is set, in which case there is nowhere to store the new capture.
Writing a '0' to this bit has no effect.
Writing a '1' to this bit clears the Error interrupt flag.

Bit 0 – OVF Overflow Interrupt Flag
This flag is set after an overflow condition occurs, and will generate an interrupt request if INTENCLR.OVF or INTENSET.OVF is '1'.
Writing a '0' to this bit has no effect.
Writing a '1' to this bit clears the Overflow interrupt flag.

33.8.8 Status

Name: STATUS
Offset: 0x0B
Reset: 0x01
Property: Read-Synchronized, Write-Synchronized

Note: This register is read- and write-synchronized: SYNCBUSY.STATUS must be checked to ensure the STATUS register synchronization is complete.

Bit	7	6	5	4	3	2	1	0
			CCBUFV1	CCBUFV0			SLAVE	STOP
Access			R/W	R/W			R/W	R
Reset			0	0			0	1

Bits 4, 5 – CCBUFVx Channel x Compare or Capture Buffer Valid
For a compare channel x, the bit x is set when a new value is written to the corresponding CCBUFx register. The bit x is cleared by writing a '1' to it when CTRLB.LUPD is set, or it is cleared automatically by hardware on UPDATE condition. If clearing this bit manually to force an update of the CCx register, it is necessary to clear the bit two times successively.
For a capture channel x, the bit x is set when a valid capture value is stored in the CCBUFx register. The bit x is cleared automatically when the CCx register is read.

Bit 1 – SLAVE Slave Status Flag
This bit is only available in 32-bit mode on the slave TC (i.e., TC1 and/or TC3). The bit is set when the associated master TC (TC0 and TC2, respectively) is set to run in 32-bit mode.

Bit 0 – STOP Stop Status Flag
This bit is set when the TC is disabled, on a Stop command, or on an overflow/underflow condition when the One-Shot bit in the Control B Set register (CTRLBSET.ONESHOT) is '1'.

Value	Description
0	Counter is running.
1	Counter is stopped.

33.8.9 Waveform Generation Control

Name: WAVE
Offset: 0x0C
Reset: 0x00
Property: PAC Write-Protection, Enable-Protected

Bit	7	6	5	4	3	2	1	0
							WAVEGEN[1:0]	
Access							R/W	R/W
Reset							0	0

Bits 1:0 – WAVEGEN[1:0] Waveform Generation Mode
These bits select the waveform generation operation. They affect the top value, as shown in 33.6.2.6.1 Waveform Output Operations. They also control whether frequency or PWM waveform generation should be used. The waveform generation operations are explained in 33.6.2.6.1 Waveform Output Operations.
Note: This bit field is not synchronized.

Value	Name	Operation	Top Value	Output Waveform on Match	Output Waveform on Wraparound
0x0	NFRQ	Normal frequency	PER(1)/Max.	Toggle	No action
0x1	MFRQ	Match frequency	CC0	Toggle	Toggle
0x2	NPWM	Normal PWM	PER(1)/Max.	Set	Clear
0x3	MPWM	Match PWM	CC0	Set	Clear

1) This depends on the TC mode: In 8-bit mode, the top value is the Period Value register (PER). In 16-bit and 32-bit mode it is the respective Max. value.

33.8.10 Driver Control

Name: DRVCTRL
Offset: 0x0D
Reset: 0x00
Property: PAC Write-Protection, Enable-Protected

Bit	7	6	5	4	3	2	1	0
							INVEN1	INVEN0
Access							R/W	R/W
Reset							0	0

Bits 0, 1 – INVENx Output Waveform x Invert Enable [x = 1..0]
The INVENx bit selects inversion of the output or capture trigger input of channel x.

Value	Description
0	Disable inversion of the WO[x] output and IO input pin.
1	Enable inversion of the WO[x] output and IO input pin.

33.8.11 Debug Control

Name: DBGCTRL
Offset: 0x0F
Reset: 0x00
Property: PAC Write-Protection

Bit	7	6	5	4	3	2	1	0
								DBGRUN
Access								R/W
Reset								0

Bit 0 – DBGRUN Run in Debug Mode
This bit is affected by a software system Reset, and should not be changed by software while the TC is enabled.

Value	Description
0	The TC is halted when the device is halted in debug mode.
1	The TC continues normal operation when the device is halted in debug mode.

33.8.12 Synchronization Busy

Name: SYNCBUSY
Offset: 0x10
Reset: 0x00000000
Property: -

Bit	31	30	29	28	27	26	25	24
Access								
Reset								

Bit	23	22	21	20	19	18	17	16
Access								
Reset								

Bit	15	14	13	12	11	10	9	8
Access								
Reset								

Bit	7	6	5	4	3	2	1	0
	CC1	CC0		COUNT	STATUS	CTRLB	ENABLE	SWRST
Access	R	R		R	R	R	R	R
Reset	0	0		0	0	0	0	0

Bits 6, 7 – CCx Compare/Capture Channel x Synchronization Busy [x = 1..0]
For details on CC channels number, refer to each TC feature list.
This bit is set when the synchronization of CCx between clock domains is started.
This bit is also set when the CCBUFx is written, and cleared on update condition. The bit is automatically cleared when the STATUS.CCBUFx bit is cleared.
This bit is cleared when the synchronization of CCx between the clock domains is complete.

Bit 4 – COUNT COUNT Synchronization Busy
This bit is cleared when the synchronization of COUNT between the clock domains is complete.
This bit is set when the synchronization of COUNT between clock domains is started.

Bit 3 – STATUS STATUS Synchronization Busy
This bit is cleared when the synchronization of STATUS between the clock domains is complete.
This bit is set when a '1' is written to the Capture Channel Buffer Valid status flags (STATUS.CCBUFVx) and the synchronization of STATUS between clock domains is started.

Bit 2 – CTRLB CTRLB Synchronization Busy
This bit is cleared when the synchronization of CTRLBSET or CTRLBCLR between the clock domains is complete.
This bit is set when the synchronization of CTRLBSET or CTRLBCLR between clock domains is started.

Bit 1 – ENABLE ENABLE Synchronization Busy
This bit is cleared when the synchronization of ENABLE bit between the clock domains is complete.
This bit is set when the synchronization of ENABLE bit between clock domains is started.

Bit 0 – SWRST SWRST Synchronization Busy
This bit is cleared when the synchronization of SWRST bit between the clock domains is complete.
This bit is set when the synchronization of SWRST bit between clock domains is started.

33.8.13 Counter Value, 16-bit Mode

Name: COUNT
Offset: 0x14
Reset: 0x00
Property: PAC Write-Protection, Write-Synchronized, Read-Synchronized

Notes:

1. This register is read-synchronized: prior to any read access, this register must be synchronized by user by writing the according TC Command value to the Control B Set register (CTRLBSET.CMD=READSYNC).
2. This register is write-synchronized: SYNCBUSY.COUNT must be checked to ensure the COUNT register synchronization is complete.

Bit	15	14	13	12	11	10	9	8
	COUNT[15:8]							
Access	R/W	R/W	R/W	R/W	R/W	R/W	R/W	R/W
Reset	0	0	0	0	0	0	0	0

Bit	7	6	5	4	3	2	1	0
	COUNT[7:0]							
Access	R/W	R/W	R/W	R/W	R/W	R/W	R/W	R/W
Reset	0	0	0	0	0	0	0	0

Bits 15:0 – COUNT[15:0] Counter Value
These bits contain the current counter value.

33.8.14 Channel x Compare/Capture Value, 16-bit Mode

Name: CCx
Offset: 0x1C + x*0x02 [x=0..1]
Reset: 0x0000
Property: Write-Synchronized

Note: This register is write-synchronized: SYNCBUSY.CCx must be checked to ensure the CCx register synchronization is complete.

Bit	15	14	13	12	11	10	9	8
	CC[15:8]							
Access	R/W	R/W	R/W	R/W	R/W	R/W	R/W	R/W
Reset	0	0	0	0	0	0	0	0

Bit	7	6	5	4	3	2	1	0
	CC[7:0]							
Access	R/W	R/W	R/W	R/W	R/W	R/W	R/W	R/W
Reset	0	0	0	0	0	0	0	0

Bits 15:0 – CC[15:0] Channel x Compare/Capture Value
These bits contain the compare/capture value in 16-bit TC mode. In Match frequency (MFRQ) or Match PWM (MPWM) waveform operation (WAVE.WAVEGEN), the CC0 register is used as a period register.

33.8.15 Channel x Compare Buffer Value, 16-bit Mode

Name: CCBUFx
Offset: 0x30 + x*0x02 [x=0..1]
Reset: 0x0000
Property: Write-Synchronized

Note: This register is write-synchronized: SYNCBUSY.CCx must be checked to ensure the CCx register synchronization is complete.

Bit	15	14	13	12	11	10	9	8
	CCBUF[15:8]							
Access	R/W	R/W	R/W	R/W	R/W	R/W	R/W	R/W
Reset	0	0	0	0	0	0	0	0

Bit	7	6	5	4	3	2	1	0
	CCBUF[7:0]							
Access	R/W	R/W	R/W	R/W	R/W	R/W	R/W	R/W
Reset	0	0	0	0	0	0	0	0

Bits 15:0 – CCBUF[15:0] Channel x Compare Buffer Value
These bits hold the value of the Channel x Compare Buffer Value. When the buffer valid flag is '1' and double buffering is enabled (CTRLBCLR.LUPD=1), the data from buffer registers will be copied into the corresponding CCx register under UPDATE condition, including the software update command (CTRLBSET.CMD=0x3).

33.9 Register Summary - 32-bit Mode

Offset	Name	Bit Pos.	7	6	5	4	3	2	1	0
0x00	CTRLA	7:0	ONDEMAND	RUNSTDBY	PRESCSYNC[1:0]		MODE[1:0]		ENABLE	SWRST
		15:8					ALOCK	PRESCALER[2:0]		
		23:16			COPEN1	COPEN0			CAPTEN1	CAPTEN0
		31:24				CAPTMODE1[1:0]			CAPTMODE0[1:0]	
0x04	CTRLBCLR	7:0	CMD[2:0]					ONESHOT	LUPD	DIR
0x05	CTRLBSET	7:0	CMD[2:0]					ONESHOT	LUPD	DIR
0x06	EVCTRL	7:0			TCEI	TCINV		EVACT[2:0]		
		15:8			MCEO1	MCEO0				OVFEO
0x08	INTENCLR	7:0			MC1	MC0			ERR	OVF
0x09	INTENSET	7:0			MC1	MC0			ERR	OVF
0x0A	INTFLAG	7:0			MC1	MC0			ERR	OVF
0x0B	STATUS	7:0			CCBUFV1	CCBUFV0			SLAVE	STOP
0x0C	WAVE	7:0							WAVEGEN[1:0]	
0x0D	DRVCTRL	7:0							INVEN1	INVEN0
0x0E	Reserved									
0x0F	DBGCTRL	7:0								DBGRUN
0x10	SYNCBUSY	7:0	CC1	CC0		COUNT	STATUS	CTRLB	ENABLE	SWRST
		15:8								
		23:16								
		31:24								
0x14	COUNT	7:0	COUNT[7:0]							
		15:8	COUNT[15:8]							
		23:16	COUNT[23:16]							
		31:24	COUNT[31:24]							
0x18 ... 0x1B	Reserved									
0x1C	CC0	7:0	CC[7:0]							
		15:8	CC[15:8]							
		23:16	CC[23:16]							
		31:24	CC[31:24]							
0x20	CC1	7:0	CC[7:0]							
		15:8	CC[15:8]							
		23:16	CC[23:16]							
		31:24	CC[31:24]							
0x24 ... 0x2F	Reserved									
0x30	CCBUF0	7:0	CCBUF[7:0]							
		15:8	CCBUF[15:8]							
		23:16	CCBUF[23:16]							
		31:24	CCBUF[31:24]							
0x34	CCBUF1	7:0	CCBUF[7:0]							
		15:8	CCBUF[15:8]							
		23:16	CCBUF[23:16]							
		31:24	CCBUF[31:24]							

33.9.1 Control A

Name: CTRLA
Offset: 0x00
Reset: 0x00000000
Property: PAC Write-Protection, Write-Synchronized Bits, Enable-Protected Bits

Bit	31	30	29	28	27	26	25	24
				CAPTMODE1[1:0]			CAPTMODE0[1:0]	
Access				R/W	R/W		R/W	R/W
Reset				0	0		0	0

Bit	23	22	21	20	19	18	17	16
			COPEN1	COPEN0			CAPTEN1	CAPTEN0
Access			R/W	R/W			R/W	R/W
Reset			0	0			0	0

Bit	15	14	13	12	11	10	9	8
					ALOCK	PRESCALER[2:0]		
Access					R/W	R/W	R/W	R/W
Reset					0	0	0	0

Bit	7	6	5	4	3	2	1	0
	ONDEMAND	RUNSTDBY	PRESCSYNC[1:0]		MODE[1:0]		ENABLE	SWRST
Access	R/W	R/W	R/W	R/W	R/W	R/W	R/W	W
Reset	0	0	0	0	0	0	0	0

Bits 28:27 – CAPTMODE1[1:0] Capture mode Channel 1
These bits select the channel 1 capture mode.
Note: This bit field is enable-protected. This bit field is not synchronized.

Value	Name	Description
0x0	DEFAULT	Default capture
0x1	CAPTMIN	Minimum capture
0x2	CAPTMAX	Maximum capture
0x3		Reserved

Bits 25:24 – CAPTMODE0[1:0] Capture mode Channel 0
These bits select the channel 0 capture mode.
Note: This bit field is enable-protected. This bit field is not synchronized.

Value	Name	Description
0x0	DEFAULT	Default capture
0x1	CAPTMIN	Minimum capture
0x2	CAPTMAX	Maximum capture
0x3		Reserved

Bits 20, 21 – COPENx Capture On Pin x Enable [x = 1..0]
Bit x of COPEN[1:0] selects the trigger source for capture operation, either events or I/O pin input.
Note: This bit is enable-protected. This bit is not synchronized.

Value	Description
0	Event from Event System is selected as trigger source for capture operation on channel x.
1	I/O pin is selected as trigger source for capture operation on channel x.

Bits 16, 17 – CAPTENx Capture Channel x Enable [x = 1..0]
Bit x of CAPTEN[1:0] selects whether channel x is a capture or a compare channel.

Note: This bit is enable-protected. This bit is not synchronized.

Value	Description
0	CAPTEN disables capture on channel x.
1	CAPTEN enables capture on channel x.

Bit 11 – ALOCK Auto Lock
When this bit is set, Lock bit update (LUPD) is set to '1' on each overflow/underflow or re-trigger event.
Note: This bit is enable-protected. This bit is not synchronized.

Value	Description
0	The LUPD bit is not affected on overflow/underflow, and re-trigger event.
1	The LUPD bit is set on each overflow/underflow or re-trigger event.

Bits 10:8 – PRESCALER[2:0] Prescaler
These bits select the counter prescaler factor.
Note: This bit field is enable-protected. This bit field is not synchronized.

Value	Name	Description
0x0	DIV1	Prescaler: GCLK_TC
0x1	DIV2	Prescaler: GCLK_TC/2
0x2	DIV4	Prescaler: GCLK_TC/4
0x3	DIV8	Prescaler: GCLK_TC/8
0x4	DIV16	Prescaler: GCLK_TC/16
0x5	DIV64	Prescaler: GCLK_TC/64
0x6	DIV256	Prescaler: GCLK_TC/256
0x7	DIV1024	Prescaler: GCLK_TC/1024

Bit 7 – ONDEMAND Clock On Demand
This bit selects the clock requirements when the TC is stopped.
In standby mode, if the Run in Standby bit (CTRLA.RUNSTDBY) is '0', ONDEMAND is forced to '0'.
Note: This bit is enable-protected. This bit is not synchronized.

Value	Description
0	The On Demand is disabled. If On Demand is disabled, the TC will continue to request the clock when its operation is stopped (STATUS.STOP=1).
1	The On Demand is enabled. When On Demand is enabled, the stopped TC will not request the clock. The clock is requested when a software re-trigger command is applied or when an event with start/re-trigger action is detected.

Bit 6 – RUNSTDBY Run in Standby
This bit is used to keep the TC running in standby mode.
Note: This bit is enable-protected. This bit is not synchronized.

Value	Description
0	The TC is halted in standby.
1	The TC continues to run in standby.

Bits 5:4 – PRESCSYNC[1:0] Prescaler and Counter Synchronization
These bits select whether the counter should wrap around on the next GCLK_TCx clock or the next prescaled GCLK_TCx clock. It also makes it possible to reset the prescaler.
Note: This bit field is enable-protected. This bit field is not synchronized.

Value	Name	Description
0x0	GCLK	Reload or reset the counter on next generic clock
0x1	PRESC	Reload or reset the counter on next prescaler clock
0x2	RESYNC	Reload or reset the counter on next generic clock. Reset the prescaler counter
0x3	-	Reserved

Bits 3:2 – MODE[1:0] Timer Counter Mode
These bits select the counter mode.
Note: This bit field is enable-protected. This bit field is not synchronized.

Value	Name	Description
0x0	COUNT16	Counter in 16-bit mode
0x1	COUNT8	Counter in 8-bit mode
0x2	COUNT32	Counter in 32-bit mode
0x3	-	Reserved

Bit 1 – ENABLE Enable
Notes:

1. This bit is write-synchronized: SYNCBUSY.ENABLE must be checked to ensure the CTRLA.ENABLE synchronization is complete.
2. This bit is not enable protected.

Value	Description
0	The peripheral is disabled.
1	The peripheral is enabled.

Bit 0 – SWRST Software Reset
Writing a '0' to this bit has no effect.
Writing a '1' to this bit resets all registers in the TC, except DBGCTRL, to their initial state, and the TC will be disabled.
Writing a '1' to CTRLA.SWRST will always take precedence; all other writes in the same write-operation will be discarded.
Notes:

1. This bit is write-synchronized: SYNCBUSY.SWRST must be checked to ensure the CTRLA.SWRST synchronization is complete.
2. This bit is not enable protected.

Value	Description
0	There is no reset operation ongoing.
1	The reset operation is ongoing.

33.9.2 Control B Clear

Name: CTRLBCLR
Offset: 0x04
Reset: 0x00
Property: PAC Write-Protection, Read-Synchronized, Write-Synchronized

This register allows the user to clear bits in the CTRLB register without doing a read-modify-write operation. Changes in this register will also be reflected in the Control B Set register (CTRLBSET).

Note: This register is read- and write-synchronized: SYNCBUSY.CTRLB must be checked to ensure the CTRLBCLR register synchronization is complete.

Bit	7	6	5	4	3	2	1	0
	CMD[2:0]					ONESHOT	LUPD	DIR
Access	R/W	R/W	R/W			R/W	R/W	R/W
Reset	0	0	0			0	0	0

Bits 7:5 – CMD[2:0] Command
These bits are used for software control of the TC. The commands are executed on the next prescaled GCLK_TC clock cycle. When a command has been executed, the CMD bit group will be read back as zero.
Writing 0x0 to these bits has no effect.
Writing a value different from 0x0 to this bit field bits will clear the pending command.

Bit 2 – ONESHOT One-Shot on Counter
This bit controls one-shot operation of the TC.
Writing a '0' to this bit has no effect
Writing a '1' to this bit will disable one-shot operation.

Value	Description
0	The TC will wrap around and continue counting on an overflow/underflow condition.
1	The TC will wrap around and stop on the next underflow/overflow condition.

Bit 1 – LUPD Lock Update
This bit controls the update operation of the TC buffered registers.
When CTRLB.LUPD is set, no any update of the registers with value of its buffered register is performed on hardware UPDATE condition. Locking the update ensures that all buffer registers are valid before an hardware update is performed. After all the buffer registers are loaded correctly, the buffered registers can be unlocked.
This bit has no effect when input capture operation is enabled.
Writing a '0' to this bit has no effect.
Writing a '1' to this bit will clear the LUPD bit.

Value	Description
0	The CCBUFx and PERBUF buffer registers value are copied into CCx and PER registers on hardware update condition.
1	The CCBUFx and PERBUF buffer registers value are not copied into CCx and PER registers on hardware update condition.

Bit 0 – DIR Counter Direction
This bit is used to change the direction of the counter.
Writing a '0' to this bit has no effect.
Writing a '1' to this bit will clear the bit and make the counter count up.

Value	Description
0	The timer/counter is counting up (incrementing).
1	The timer/counter is counting down (decrementing).

33.9.3 Control B Set

Name: CTRLBSET
Offset: 0x05
Reset: 0x00
Property: PAC Write-Protection, Read-Synchronized, Write-Synchronized

This register allows the user to set bits in the CTRLB register without doing a read-modify-write operation. Changes in this register will also be reflected in the Control B Clear register (CTRLBCLR).

Note: This register is read- and write-synchronized: SYNCBUSY.CTRLB must be checked to ensure the CTRLBSET register synchronization is complete.

Bit	7	6	5	4	3	2	1	0
	CMD[2:0]					ONESHOT	LUPD	DIR
Access	R/W	R/W	R/W			R/W	R/W	R/W
Reset	0	0	0			0	0	0

Bits 7:5 – CMD[2:0] Command
These bits are used for software control of the TC. The commands are executed on the next prescaled GCLK_TC clock cycle. When a command has been executed, the CMD bit group will be read back as zero.
Writing 0x0 to these bits has no effect.
Writing a value different from 0x0 to these bits will issue a command for execution.



Important: This command requires synchronization before being executed. A valid sequence is:

- Issue CMD command (CTRLBSET.CMD = command)
- Wait for CMD synchronization (SYNCBUSY.CTRLB = 0)
- Wait for CMD read back as zero (CTRLBSET.CMD = 0)

Value	Name	Description
0x0	NONE	No action
0x1	RETRIGGER	Force a start, restart or retrigger
0x2	STOP	Force a stop
0x3	UPDATE	Force update of double buffered registers
0x4	READSYNC	Force a read synchronization of COUNT

Bit 2 – ONESHOT One-Shot on Counter
This bit controls one-shot operation of the TC.
Writing a '0' to this bit has no effect.
Writing a '1' to this bit will enable one-shot operation.

Value	Description
0	The TC will wrap around and continue counting on an overflow/underflow condition.
1	The TC will wrap around and stop on the next underflow/overflow condition.

Bit 1 – LUPD Lock Update
This bit controls the update operation of the TC buffered registers.
When CTRLB.LUPD is set, no any update of the registers with value of its buffered register is performed on hardware UPDATE condition. Locking the update ensures that all buffer registers are valid before an hardware update is performed. After all the buffer registers are loaded correctly, the buffered registers can be unlocked.
Writing a '0' to this bit has no effect.
Writing a '1' to this bit will set the LUPD bit.
This bit has no effect when input capture operation is enabled.

Value	Description
0	The CCBUFx and PERBUF buffer registers value are copied into CCx and PER registers on hardware update condition.

Value	Description
1	The CCBUFx and PERBUF buffer registers value are not copied into CCx and PER registers on hardware update condition.

Bit 0 – DIR Counter Direction
This bit is used to change the direction of the counter.
Writing a '0' to this bit has no effect
Writing a '1' to this bit will set the bit and make the counter count down.

Value	Description
0	The timer/counter is counting up (incrementing).
1	The timer/counter is counting down (decrementing).

33.9.4 Event Control

Name: EVCTRL
Offset: 0x06
Reset: 0x0000
Property: PAC Write-Protection, Enable-Protected

Bit	15	14	13	12	11	10	9	8
			MCEO1	MCEO0				OVFEO
Access			R/W	R/W				R/W
Reset			0	0				0

Bit	7	6	5	4	3	2	1	0
			TCEI	TCINV		EVACT[2:0]		
Access			R/W	R/W		R/W	R/W	R/W
Reset			0	0		0	0	0

Bits 12, 13 – MCEOx Match or Capture Channel x Event Output Enable [x = 1..0]
These bits enable the generation of an event for every match or capture on channel x.

Value	Description
0	Match/Capture event on channel x is disabled and will not be generated.
1	Match/Capture event on channel x is enabled and will be generated for every compare/capture.

Bit 8 – OVFEO Overflow/Underflow Event Output Enable
This bit enables the Overflow/Underflow event. When enabled, an event will be generated when the counter overflows/underflows.

Value	Description
0	Overflow/Underflow event is disabled and will not be generated.
1	Overflow/Underflow event is enabled and will be generated for every counter overflow/underflow.

Bit 5 – TCEI TC Event Enable
This bit is used to enable asynchronous input events to the TC.

Value	Description
0	Incoming events are disabled.
1	Incoming events are enabled.

Bit 4 – TCINV TC Inverted Event Input Polarity
This bit inverts the asynchronous input event source.

Value	Description
0	Input event source is not inverted.
1	Input event source is inverted.

Bits 2:0 – EVACT[2:0] Event Action
These bits define the event action the TC will perform on an event.

Value	Name	Description
0x0	OFF	Event action disabled
0x1	RETRIGGER	Start, restart or retrigger TC on event
0x2	COUNT	Count on event (not a valid selection for waveform generation)
0x3	START	Start TC on event
0x4	STAMP	Time stamp capture
0x5	PPW	Period captured in CC0, pulse width in CC1
0x6	PWP	Period captured in CC1, pulse width in CC0
0x7	PW	Pulse width capture

33.9.5 Interrupt Enable Clear

Name: INTENCLR
Offset: 0x08
Reset: 0x00
Property: PAC Write-Protection

This register allows the user to disable an interrupt without doing a read-modify-write operation. Changes in this register will also be reflected in the Interrupt Enable Set register (INTENSET).

Bit	7	6	5	4	3	2	1	0
			MC1	MC0			ERR	OVF
Access			R/W	R/W			R/W	R/W
Reset			0	0			0	0

Bits 4, 5 – MCx Match or Capture Channel x Interrupt Disable [x = 1..0]
Writing a '0' to these bits has no effect.
Writing a '1' to MCx will clear the corresponding Match or Capture Channel x Interrupt Enable bit, which disables the Match or Capture Channel x interrupt.

Value	Description
0	The Match or Capture Channel x interrupt is disabled.
1	The Match or Capture Channel x interrupt is enabled.

Bit 1 – ERR Error Interrupt Disable
Writing a '0' to this bit has no effect.
Writing a '1' to this bit will clear the Error Interrupt Enable bit, which disables the Error interrupt.

Value	Description
0	The Error interrupt is disabled.
1	The Error interrupt is enabled.

Bit 0 – OVF Overflow Interrupt Disable
Writing a '0' to this bit has no effect.
Writing a '1' to this bit will clear the Overflow Interrupt Enable bit, which disables the Overflow interrupt request.

Value	Description
0	The Overflow interrupt is disabled.
1	The Overflow interrupt is enabled.

33.9.6 Interrupt Enable Set

Name: INTENSET
Offset: 0x09
Reset: 0x00
Property: PAC Write-Protection

This register allows the user to enable an interrupt without doing a read-modify-write operation. Changes in this register will also be reflected in the Interrupt Enable Clear register (INTENCLR).

Bit	7	6	5	4	3	2	1	0
			MC1	MC0			ERR	OVF
Access			R/W	R/W			R/W	R/W
Reset			0	0			0	0

Bits 4, 5 – MCx Match or Capture Channel x Interrupt Enable [x = 1..0]
Writing a '0' to these bits has no effect.
Writing a '1' to MCx will set the corresponding Match or Capture Channel x Interrupt Enable bit, which enables the Match or Capture Channel x interrupt.

Value	Description
0	The Match or Capture Channel x interrupt is disabled.
1	The Match or Capture Channel x interrupt is enabled.

Bit 1 – ERR Error Interrupt Enable
Writing a '0' to this bit has no effect.
Writing a '1' to this bit will set the Error Interrupt Enable bit, which enables the Error interrupt.

Value	Description
0	The Error interrupt is disabled.
1	The Error interrupt is enabled.

Bit 0 – OVF Overflow Interrupt Enable
Writing a '0' to this bit has no effect.
Writing a '1' to this bit will set the Overflow Interrupt Enable bit, which enables the Overflow interrupt request.

Value	Description
0	The Overflow interrupt is disabled.
1	The Overflow interrupt is enabled.

33.9.7 Interrupt Flag Status and Clear

Name: INTFLAG
Offset: 0x0A
Reset: 0x00
Property: -

Bit	7	6	5	4	3	2	1	0
			MC1	MC0			ERR	OVF
Access			R/W	R/W			R/W	R/W
Reset			0	0			0	0

Bits 4, 5 – MCx Match or Capture Channel x Interrupt Flag [x = 1..0]
This flag is set on a comparison match, or when the corresponding CCx register contains a valid capture value. This flag will generate an interrupt request if the corresponding INTENCLR.MCx or INTENSET.MCx bit is '1'.
Writing a '0' to one of these bits has no effect.
Writing a '1' to one of these bits will clear the corresponding Match or Capture Channel x interrupt flag.
In capture operation, this flag is automatically cleared when CCx register is read.

Bit 1 – ERR Error Interrupt Flag
This flag is set when a new capture occurs on a channel while the corresponding Match or Capture Channel x interrupt flag is set, in which case there is nowhere to store the new capture.
Writing a '0' to this bit has no effect.
Writing a '1' to this bit clears the Error interrupt flag.

Bit 0 – OVF Overflow Interrupt Flag
This flag is set after an overflow condition occurs, and will generate an interrupt request if INTENCLR.OVF or INTENSET.OVF is '1'.
Writing a '0' to this bit has no effect.
Writing a '1' to this bit clears the Overflow interrupt flag.

33.9.8 Status

Name: STATUS
Offset: 0x0B
Reset: 0x01
Property: Read-Synchronized, Write-Synchronized

Note: This register is read- and write-synchronized: SYNCBUSY.STATUS must be checked to ensure the STATUS register synchronization is complete.

Bit	7	6	5	4	3	2	1	0
			CCBUFV1	CCBUFV0			SLAVE	STOP
Access			R/W	R/W			R/W	R
Reset			0	0			0	1

Bits 4, 5 – CCBUFVx Channel x Compare or Capture Buffer Valid
For a compare channel x, the bit x is set when a new value is written to the corresponding CCBUFx register. The bit x is cleared by writing a '1' to it when CTRLB.LUPD is set, or it is cleared automatically by hardware on UPDATE condition. If clearing this bit manually to force an update of the CCx register, it is necessary to clear the bit two times successively.
For a capture channel x, the bit x is set when a valid capture value is stored in the CCBUFx register. The bit x is cleared automatically when the CCx register is read.

Bit 1 – SLAVE Slave Status Flag
This bit is only available in 32-bit mode on the slave TC (i.e., TC1 and/or TC3). The bit is set when the associated master TC (TC0 and TC2, respectively) is set to run in 32-bit mode.

Bit 0 – STOP Stop Status Flag
This bit is set when the TC is disabled, on a Stop command, or on an overflow/underflow condition when the One-Shot bit in the Control B Set register (CTRLBSET.ONESHOT) is '1'.

Value	Description
0	Counter is running.
1	Counter is stopped.

33.9.9 Waveform Generation Control

Name: WAVE
Offset: 0x0C
Reset: 0x00
Property: PAC Write-Protection, Enable-Protected

Bit	7	6	5	4	3	2	1	0
							WAVEGEN[1:0]	
Access							R/W	R/W
Reset							0	0

Bits 1:0 – WAVEGEN[1:0] Waveform Generation Mode
These bits select the waveform generation operation. They affect the top value, as shown in 33.6.2.6.1 Waveform Output Operations. They also control whether frequency or PWM waveform generation should be used. The waveform generation operations are explained in 33.6.2.6.1 Waveform Output Operations.
Note: This bit field is not synchronized.

Value	Name	Operation	Top Value	Output Waveform on Match	Output Waveform on Wraparound
0x0	NFRQ	Normal frequency	PER(1)/Max.	Toggle	No action
0x1	MFRQ	Match frequency	CC0	Toggle	Toggle
0x2	NPWM	Normal PWM	PER(1)/Max.	Set	Clear
0x3	MPWM	Match PWM	CC0	Set	Clear

1) This depends on the TC mode: In 8-bit mode, the top value is the Period Value register (PER). In 16-bit and 32-bit mode it is the respective Max. value.

33.9.10 Driver Control

Name: DRVCTRL
Offset: 0x0D
Reset: 0x00
Property: PAC Write-Protection, Enable-Protected

Bit	7	6	5	4	3	2	1	0
							INVEN1	INVEN0
Access							R/W	R/W
Reset							0	0

Bits 0, 1 – INVENx Output Waveform x Invert Enable [x = 1..0]
The INVENx bit selects inversion of the output or capture trigger input of channel x.

Value	Description
0	Disable inversion of the WO[x] output and IO input pin.
1	Enable inversion of the WO[x] output and IO input pin.

33.9.11 Debug Control

Name: DBGCTRL
Offset: 0x0F
Reset: 0x00
Property: PAC Write-Protection

Bit	7	6	5	4	3	2	1	0
								DBGRUN
Access								R/W
Reset								0

Bit 0 – DBGRUN Run in Debug Mode
This bit is affected by a software system Reset, and should not be changed by software while the TC is enabled.

Value	Description
0	The TC is halted when the device is halted in debug mode.
1	The TC continues normal operation when the device is halted in debug mode.

33.9.12 Synchronization Busy

Name: SYNCBUSY
Offset: 0x10
Reset: 0x00000000
Property: -

Bit	31	30	29	28	27	26	25	24
Access								
Reset								

Bit	23	22	21	20	19	18	17	16
Access								
Reset								

Bit	15	14	13	12	11	10	9	8
Access								
Reset								

Bit	7	6	5	4	3	2	1	0
	CC1	CC0		COUNT	STATUS	CTRLB	ENABLE	SWRST
Access	R	R		R	R	R	R	R
Reset	0	0		0	0	0	0	0

Bits 6, 7 – CCx Compare/Capture Channel x Synchronization Busy [x = 1..0]
For details on CC channels number, refer to each TC feature list.
This bit is set when the synchronization of CCx between clock domains is started.
This bit is also set when the CCBUFx is written, and cleared on update condition. The bit is automatically cleared when the STATUS.CCBUFx bit is cleared.
This bit is cleared when the synchronization of CCx between the clock domains is complete.

Bit 4 – COUNT COUNT Synchronization Busy
This bit is cleared when the synchronization of COUNT between the clock domains is complete.
This bit is set when the synchronization of COUNT between clock domains is started.

Bit 3 – STATUS STATUS Synchronization Busy
This bit is cleared when the synchronization of STATUS between the clock domains is complete.
This bit is set when a '1' is written to the Capture Channel Buffer Valid status flags (STATUS.CCBUFVx) and the synchronization of STATUS between clock domains is started.

Bit 2 – CTRLB CTRLB Synchronization Busy
This bit is cleared when the synchronization of CTRLBSET or CTRLBCLR between the clock domains is complete.
This bit is set when the synchronization of CTRLBSET or CTRLBCLR between clock domains is started.

Bit 1 – ENABLE ENABLE Synchronization Busy
This bit is cleared when the synchronization of ENABLE bit between the clock domains is complete.
This bit is set when the synchronization of ENABLE bit between clock domains is started.

Bit 0 – SWRST SWRST Synchronization Busy
This bit is cleared when the synchronization of SWRST bit between the clock domains is complete.
This bit is set when the synchronization of SWRST bit between clock domains is started.

33.9.13 Counter Value, 32-bit Mode

Name: COUNT
Offset: 0x14
Reset: 0x00000000
Property: PAC Write-Protection, Write-Synchronized, Read-Synchronized

Notes:

1. This register is read-synchronized: prior to any read access, this register must be synchronized by user by writing the according TC Command value to the Control B Set register (CTRLBSET.CMD=READSYNC).
2. This register is write-synchronized: SYNCBUSY.COUNT must be checked to ensure the COUNT register synchronization is complete.

Bit	31	30	29	28	27	26	25	24
	COUNT[31:24]							
Access	R/W	R/W	R/W	R/W	R/W	R/W	R/W	R/W
Reset	0	0	0	0	0	0	0	0

Bit	23	22	21	20	19	18	17	16
	COUNT[23:16]							
Access	R/W	R/W	R/W	R/W	R/W	R/W	R/W	R/W
Reset	0	0	0	0	0	0	0	0

Bit	15	14	13	12	11	10	9	8
	COUNT[15:8]							
Access	R/W	R/W	R/W	R/W	R/W	R/W	R/W	R/W
Reset	0	0	0	0	0	0	0	0

Bit	7	6	5	4	3	2	1	0
	COUNT[7:0]							
Access	R/W	R/W	R/W	R/W	R/W	R/W	R/W	R/W
Reset	0	0	0	0	0	0	0	0

Bits 31:0 – COUNT[31:0] Counter Value
These bits contain the current counter value.

33.9.14 Channel x Compare/Capture Value, 32-bit Mode

Name: CCx
Offset: 0x1C + x*0x04 [x=0..1]
Reset: 0x00000000
Property: Write-Synchronized

Note: This register is write-synchronized: SYNCBUSY.CCx must be checked to ensure the CCx register synchronization is complete.

Bit	31	30	29	28	27	26	25	24
	CC[31:24]							
Access	R/W	R/W	R/W	R/W	R/W	R/W	R/W	R/W
Reset	0	0	0	0	0	0	0	0

Bit	23	22	21	20	19	18	17	16
	CC[23:16]							
Access	R/W	R/W	R/W	R/W	R/W	R/W	R/W	R/W
Reset	0	0	0	0	0	0	0	0

Bit	15	14	13	12	11	10	9	8
	CC[15:8]							
Access	R/W	R/W	R/W	R/W	R/W	R/W	R/W	R/W
Reset	0	0	0	0	0	0	0	0

Bit	7	6	5	4	3	2	1	0
	CC[7:0]							
Access	R/W	R/W	R/W	R/W	R/W	R/W	R/W	R/W
Reset	0	0	0	0	0	0	0	0

Bits 31:0 – CC[31:0] Channel x Compare/Capture Value
These bits contain the compare/capture value in 32-bit TC mode. In Match frequency (MFRQ) or Match PWM (MPWM) waveform operation (WAVE.WAVEGEN), the CC0 register is used as a period register.

33.9.15 Channel x Compare Buffer Value, 32-bit Mode

Name: CCBUFx
Offset: 0x30 + x*0x04 [x=0..1]
Reset: 0x00000000
Property: Write-Synchronized

Note: This register is write-synchronized: SYNCBUSY.CCx must be checked to ensure the CCx register synchronization is complete.

Bit	31	30	29	28	27	26	25	24
	CCBUF[31:24]							
Access	R/W	R/W	R/W	R/W	R/W	R/W	R/W	R/W
Reset	0	0	0	0	0	0	0	0

Bit	23	22	21	20	19	18	17	16
	CCBUF[23:16]							
Access	R/W	R/W	R/W	R/W	R/W	R/W	R/W	R/W
Reset	0	0	0	0	0	0	0	0

Bit	15	14	13	12	11	10	9	8
	CCBUF[15:8]							
Access	R/W	R/W	R/W	R/W	R/W	R/W	R/W	R/W
Reset	0	0	0	0	0	0	0	0

Bit	7	6	5	4	3	2	1	0
	CCBUF[7:0]							
Access	R/W	R/W	R/W	R/W	R/W	R/W	R/W	R/W
Reset	0	0	0	0	0	0	0	0

Bits 31:0 – CCBUF[31:0] Channel x Compare Buffer Value
These bits hold the value of the Channel x Compare Buffer Value. When the buffer valid flag is '1' and double buffering is enabled (CTRLBCLR.LUPD=1), the data from buffer registers will be copied into the corresponding CCx register under UPDATE condition, including the software update command (CTRLBSET.CMD=0x3).

34. Timer/Counter for Control (TCC) Applications

34.1 Overview

The device provides three instances of the Timer/Counter for Control (TCC) applications peripheral, TCC[2:0].

Each TCC instance consists of a counter, a prescaler, compare/capture channels and control logic. The counter can be set to count events or clock pulses. The counter together with the compare/capture channels can be configured to time stamp input events, allowing capture of frequency and pulse-width. It can also perform waveform generation, such as frequency generation and pulse-width modulation.

Waveform extensions are featured for motor control, ballast, LED, H-bridge, power converters, and other types of power control applications. They allow for low-side and high-side output with optional dead-time insertion. Waveform extensions can also generate a synchronized bit pattern across the waveform output pins. The fault options enable fault protection for safe and deterministic handling, disabling and/or shut down of external drivers.

Note: The TCC configurations, such as channel numbers and features, may be reduced for some of the TCC instances.

34.2 Features

- Up to four compare/capture channels (CC) with:
  - Double buffered period setting
  - Double buffered compare or capture channel
  - Circular buffer on period and compare channel registers
- Waveform generation:
  - Frequency generation
  - Single-slope pulse-width modulation (PWM)
  - Dual-slope PWM with half-cycle reload capability
- Input capture:
  - Event capture
  - Frequency capture
  - Pulse-width capture
- Waveform extensions:
  - Configurable distribution of compare channels outputs across port pins
  - Low-side and high-side output with programmable dead-time insertion
  - Waveform swap option with double buffer support
  - Pattern generation with double buffer support
  - Dithering support
- Fault protection for safe disabling of drivers:
  - Two recoverable fault sources
  - Two non-recoverable fault sources
  - Debugger can be a source of non-recoverable fault
- Input events:
  - Two input events (EVx) for counter
  - One input event (MCx) for each channel
- Output events:
  - Three output events (Count, Re-Trigger and Overflow) are available for counter
  - One Compare Match/Input Capture event output for each channel
- Interrupts:
  - Overflow and Re-Trigger interrupt

  - Compare Match/Input Capture interrupt
  - Interrupt on fault detection
  - Counter cycle interrupt (INTFLAG.CNT)
  - Error condition interrupt (INTFLAG.ERR)
- Can be used with DMA and can trigger DMA transactions

Table 34-1. TCC Configuration Summary

TCC#	Channels (CC_NUM)	Waveform Output (WO_NUM)	Counter size	Fault	Dithering	Output matrix	Dead Time Insertion (DTI)	SWAP	Pattern generation
0	4	8	24-bit	Yes	Yes	Yes	Yes	Yes	Yes
1	2	4	16-bit	Yes	Yes				Yes
2	2	2	16-bit	Yes					

Note: The number of CC registers (CC_NUM) for each TCC corresponds to the number of compare/capture channels, therefore a TCC can have more Waveform Outputs (WO_NUM) than CC registers.

34.3 Block Diagram

Figure 34-1. Timer/Counter for Control Applications - Block Diagram

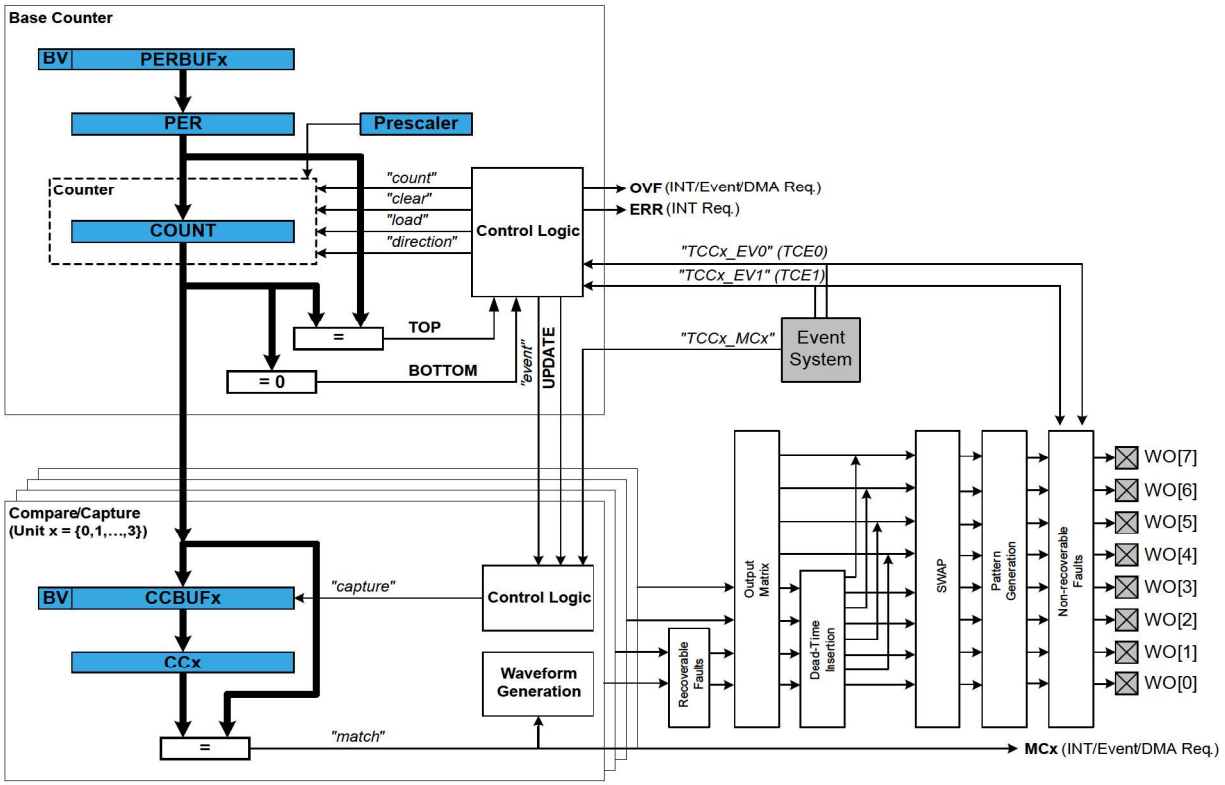

34.4 Signal Description

Pin Name	Type	Description
TCCx/WO[0]	Digital output	Compare channel 0 waveform output

.....continued		
Pin Name	**Type**	**Description**
TCCx/WO[1]	Digital output	Compare channel 1 waveform output
…	…	…
TCCx/WO[WO_NUM-1]	Digital output	Compare channel n waveform output

Refer to the 4. Pinout and Packaging for details on the pin mapping for this peripheral. One signal can be mapped on several pins.

34.5 Peripheral Dependencies

Peripheral	Base Address	IRQ	AHB CLK	APB CLK	Generic CLK	PAC		Events		DMA	Sleep Walking
			Enabled at reset	Enabled at reset	Index	Index	Prot at reset	User	Generator	Index	
TCC0	0x42002400	13	-	N	23	9	N	9-10: EV0-1	35: OVF	10: OVF	Y
									36: TRG		
								11-14: MC0-3	37: NT	11-14: MC0-3	
									38-41: MC0-3		
TCC1	0x42002800	14	-	N	23	10	N	15-16: EV0-1	42: OVF	15: OVF	Y
									43: TRG		
								17-18: MC0-1	44:CNT	16-17: MC0-1	
									45-46: MC0-1		
TCC2	0x42002C00	15	-	N	24	11	N	19-20: EV0-1	47: OVF	18: OVF	Y
									48: TRG		
								21-22: MC0-1	49: CNT	19-20: MC0-1	
									50-51 MC0-1		

34.6 Functional Description

34.6.1 Principle of Operation

The following definitions are used throughout the documentation:

Table 34-2. Timer/Counter for Control Applications - Definitions

Name	Description
TOP	The counter reaches TOP when it becomes equal to the highest value in the count sequence. The TOP value can be the same as Period (PER) or the Compare Channel 0 (CC0) register value depending on the waveform generator mode in 34.6.2.5.1 Waveform Output Generation Operations.
ZERO	The counter reaches ZERO when it contains all zeroes.
MAX	The counter reaches maximum when it contains all ones.
UPDATE	The timer/counter signals an update when it reaches ZERO or TOP, depending on the direction settings.

.....continued	
Name	**Description**
Timer	Increment / decrement / clear / reload steps are done on each prescaled clock.
Counter	Increment / decrement / clear / reload steps is done on each detected events.
CC	For compare operations, the CC are referred to as "compare channels." For capture operations, the CC are referred to as "capture channels."

Each TCC instance has up to four compare/capture channels (CCx).

The counter register (COUNT), period registers with buffer (PER and PERBUF), and compare and capture registers with buffers (CCx and CCBUFx) are 16- or 24-bit registers, depending on each TCC instance. Each buffer register has a buffer valid (BUFV) flag that indicates when the buffer contains a new value.

Under normal operation, the counter value is continuously compared to the TOP or ZERO value to determine whether the counter has reached TOP or ZERO. In either case, the TCC can generate interrupt requests, request DMA transactions, or generate events for the Event System. In waveform generator mode, these comparisons are used to set the waveform period or pulse alignment.

A prescaled generic clock (GCLK_TCCx) and events from the event system can be used to control the counter. The event system is also used as a source to the input capture.

The Recoverable Fault Unit enables event controlled waveforms by acting directly on the generated waveforms of the TCC compare channels output. These events can restart, halt the timer/counter period, shorten the output pulse active time, or disable waveform output as long as the fault condition is present. This can typically be used for current sensing regulation, and zero-crossing and demagnetization re-triggering.

The MCE0 and MCE1 asynchronous event sources are shared with the Recoverable Fault Unit. Only asynchronous events are used internally when fault unit extension is enabled. For further details on how to configure asynchronous events routing, refer to EVSYS – Event System.

Recoverable fault sources can be filtered and/or windowed to avoid false triggering, for example from I/O pin glitches, by using digital filtering, input blanking, and qualification options. See also 34.6.3.5 Recoverable Faults.

In order to support applications with different types of motor control, ballast, LED, H-bridge, power converter, and other types of power switching applications, the following independent units are implemented in some of the TCC instances as optional and successive units:

- Recoverable faults and non-recoverable faults
- Output matrix
- Dead-time insertion
- Swap
- Pattern generation
- Dithering

See the TCC Block Diagram for more information.

The output matrix (OTMX) can distribute and route out the TCC waveform outputs across the port pins in different configurations, each optimized for different application types. The Dead-Time Insertion (DTI) unit splits the four lower OTMX outputs into two non-overlapping signals: the non-inverted low side (LS) and inverted high side (HS) of the waveform output with optional dead-time insertion between LS and HS switching. The SWAP unit can swap the LS and HS pin outputs, and can be used for fast decay motor control.

The pattern generation unit can be used to generate synchronized waveforms with constant logic level on TCC UPDATE conditions. This is useful for easy stepper motor and full bridge control.

The non-recoverable fault module enables event controlled fault protection by acting directly on the generated waveforms of the timer/counter compare channel outputs. When a non-recoverable fault condition is detected, the output waveforms are forced to a preconfigured value that is safe for the application. This is typically used for instant and predictable shut down and disabling high current or voltage drives.

The count event sources (TCE0 and TCE1) are shared with the non-recoverable fault extension. The events can be optionally filtered.

Note: MCE0 and MCE1 can also be used as non-recoverable event source.

If the filter options are not used, the non-recoverable faults provide an immediate asynchronous action on waveform output, even for cases where the clock is not present. For further details on how to configure asynchronous events routing, refer to section EVSYS – Event System.

34.6.2 Basic Operation

34.6.2.1 Initialization

The following registers are enable-protected, meaning that they can only be written when the TCC is disabled(CTRLA.ENABLE=0):

- Control A (CTRLA) register, except Run Standby (RUNSTDBY), Enable (ENABLE) and Software Reset (SWRST) bits
- Recoverable Fault n Control registers (FCTRLA and FCTRLB)
- Waveform Extension Control register (WEXCTRL)
- Drive Control register (DRVCTRL)
- Event Control register (EVCTRL)

Enable-protected bits in the CTRLA register can be written at the same time as CTRLA.ENABLE is written to '1', but not at the same time as CTRLA.ENABLE is written to '0'. Enable-protection is denoted by the “Enable-Protected” property in the register description.

Before the TCC is enabled, it must be configured as outlined by the following steps:

1. Enable the TCC bus clock (CLK_TCCx_APB).
2. If Capture mode is required, enable the channel in capture mode by writing a '1' to the Capture Enable bit in the Control A register (CTRLA.CPTEN).

Optionally, the following configurations can be set before enabling TCC:

1. Select PRESCALER setting in the Control A register (CTRLA.PRESCALER).
2. Select Prescaler Synchronization setting in Control A register (CTRLA.PRESCSYNC).
3. If down-counting operation is desired, write the Counter Direction bit in the Control B Set register (CTRLBSET.DIR) to '1'.
4. Select the Waveform Generation operation in the WAVE register (WAVE.WAVEGEN).
5. Select the Waveform Output Polarity in the WAVE register (WAVE.POL).
6. The waveform output can be inverted for the individual channels using the Waveform Output Invert Enable bit group in the Driver register (DRVCTRL.INVEN).

Note: Two instances of the TCC (TCC0 and TCC1) may share a peripheral clock channel. In this case, they cannot be set to different clock frequencies. Refer to the peripheral clock channel mapping of the Generic Clock Controller (GCLK.PCHTRLm) to identify shared peripheral clocks.

34.6.2.2 Enabling, Disabling, and Resetting

The TCC is enabled by writing a '1' to the Enable bit in the Control A register (CTRLA.ENABLE). The TCC is disabled by writing a zero to CTRLA.ENABLE.

The TCC is reset by writing '1' to the Software Reset bit in the Control A register (CTRLA.SWRST). All registers in the TCC, except DBGCTRL, will be reset to their initial state, and the TCC will be disabled. Refer to Control A (34.7.1 CTRLA) register for details.

The TCC should be disabled before the TCC is reset to avoid undefined behavior.

34.6.2.3 Prescaler Selection

The GCLK_TCCx clock is fed into the internal prescaler.

The prescaler consists of a counter that counts up to the selected prescaler value, whereupon the output of the prescaler toggles.

If the prescaler value is higher than one, the counter update condition can be optionally executed on the next GCLK_TCC clock pulse or the next prescaled clock pulse. For further details, refer to the Prescaler (CTRLA.PRESCALER) and Counter Synchronization (CTRLA.PRESYNC) descriptions.

Prescaler outputs from 1 to 1/1024 are available. For a complete list of available prescaler outputs, see the register description for the Prescaler bit group in the Control A register (CTRLA.PRESCALER).

Note: When counting events, the prescaler is bypassed.

The joint stream of prescaler ticks and event action ticks is called CLK_TCC_COUNT.

Figure 34-2. Prescaler

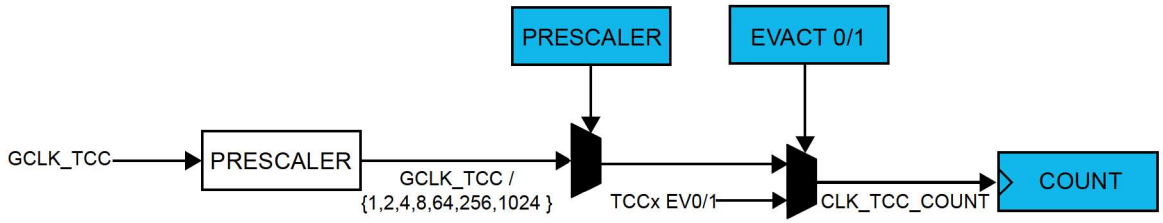

34.6.2.4 Counter Operation

Depending on the mode of operation, the counter is cleared, reloaded, incremented, or decremented at each TCC clock input (CLK_TCC_COUNT). A counter clear or reload mark the end of current counter cycle and the start of a new one.

The counting direction is set by the Direction bit in the Control B register (CTRLB.DIR). If the bit is zero, it's counting up and one if counting down.

The counter will count up or down for each tick (clock or event) until it reaches TOP or ZERO. When it's counting up and TOP is reached, the counter will be set to zero at the next tick (overflow) and the Overflow Interrupt Flag in the Interrupt Flag Status and Clear register (INTFLAG.OVF) will be set. When down-counting, the counter is reloaded with the TOP value when ZERO is reached (underflow), and INTFLAG.OVF is set.

INTFLAG.OVF can be used to trigger an interrupt, a DMA request, or an event. An overflow/underflow occurrence (i.e. a compare match with TOP/ZERO) will stop counting if the One-Shot bit in the Control B register is set (CTRLBSET.ONESHOT). The One-Shot feature is explained in the Additional Features section.

Figure 34-3. Counter Operation

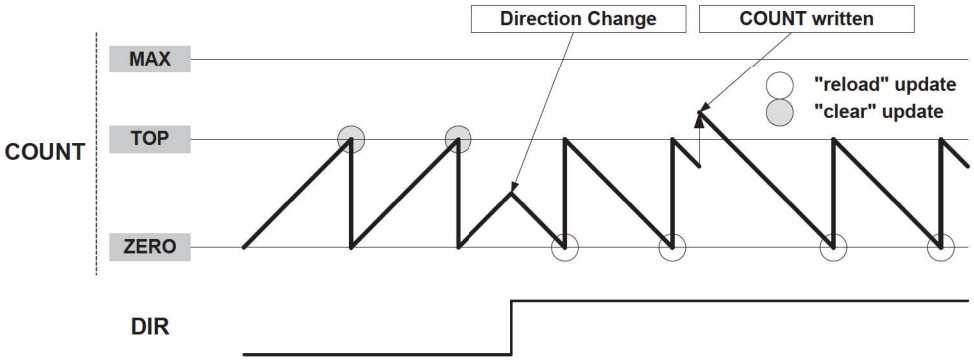

It is possible to change the counter value (by writing directly in the COUNT register) even when the counter is running. The COUNT value will always be ZERO or TOP, depending on direction set by CTRLBSET.DIR or CTRLBCLR.DIR, when starting the TCC, unless a different value has been written to it, or the TCC has been stopped at a value other than ZERO. The write access has higher priority than count, clear, or reload. The direction of the counter can also be changed during normal operation. See the figure 34-3 above for further information.

Stop Command

A stop command can be issued from software by using TCC Command bits in Control B Set register (CTRLBSET.CMD=0x2, STOP).

When a stop is detected while the counter is running, the counter will maintain its current value. If the waveform generation (WG) is used, all waveforms are set to a state defined in Non-Recoverable State x Output Enable bit and Non- Recoverable State x Output Value bit in the Driver Control register (DRVCTRL.NREx and DRVCTRL.NRVx), and the Stop bit in the Status register is set (STATUS.STOP).

Pause Event Action

A pause command can be issued when the stop event action is configured in the Input Event Action 1 bits in Event Control register (EVCTRL.EVACT1=0x3, STOP).

When a pause is detected, the counter can stop immediately maintaining its current value and all waveforms keep their current state, as long as a start event action is detected: Input Event Action 0 bits in Event Control register (EVCTRL.EVACT0=0x3, START).

Re-Trigger Command and Event Action

A re-trigger command can be issued from software by using TCC Command bits in Control B Set register (CTRLBSET.CMD=0x1, RETRIGGER), or from event when the re-trigger event action is configured in the Input Event 0/1 Action bits in Event Control register (EVCTRL.EVACTx=0x1, RETRIGGER).

When the command is detected during counting operation, the counter will be reloaded or cleared, depending on the counting direction (CTRLBSET.DIR or CTRLBCLR.DIR). The Re-Trigger bit in the Interrupt Flag Status and Clear register will be set (INTFLAG.TRG). It is also possible to generate an event by writing a '1' to the Re-Trigger Event Output Enable bit in the Event Control register (EVCTRL.TRGEO). If the re-trigger command is detected when the counter is stopped, the counter will resume counting operation from the value in COUNT.

Note:
When a re-trigger event action is configured in the Event Action bits in the Event Control register (EVCTRL.EVACTx=0x1, RETRIGGER), enabling the counter will not start the counter. The counter will start on the next incoming event and restart on corresponding following event.

Start Event Action

The start action can be selected in the Event Control register (EVCTRL.EVACT0=0x3, START) and can start the counting operation when previously stopped. The event has no effect if the counter is already counting. When the module is enabled, the counter operation starts when the event is received or when a re-trigger software command is applied.

Note:
When a start event action is configured in the Event Action bits in the Event Control register (EVCTRL.EVACT0=0x3, START), enabling the counter will not start the counter. The counter will start on the next incoming event, but it will not restart on subsequent events.

Count Event Action

The TCC can count events. When an event is received, the counter increases or decreases the value, depending on direction settings (CTRLBSET.DIR or CTRLBCLR.DIR).

The count event action is selected by the Event Action 0 bit group in the Event Control register (EVCTRL.EVACT0=0x5, COUNT).

Count on Active State of Asynchronous Event

The TCC counts during the active state of an asynchronous event (increment or decrement, depending on counter direction).

Direction Event Action

The direction event action can be selected in the Event Control register (EVCTRL.EVACT1=0x2, DIR). When this event is used, the asynchronous event path specified in the event system must be configured or selected. The direction event action can be used to control the direction of the counter operation, depending on external events level. When received, the event level overrides the Direction settings (CTRLBSET.DIR or CTRLBCLR.DIR) and the direction bit value is updated accordingly.

Increment Event Action

The increment event action can be selected in the Event Control register (EVCTRL.EVACT0=0x4, INC) and can change the counter state when an event is received. When the TCE0 event (TCCx_EV0) is received, the counter increments, whatever the direction setting (CTRLBSET.DIR or CTRLBCLR.DIR) is.

Decrement Event Action

The decrement event action can be selected in the Event Control register (EVCTRL.EVACT1=0x4, DEC) and can change the counter state when an event is received. When the TCE1 (TCCx_EV1) event is received, the counter decrements, whatever the direction setting (CTRLBSET.DIR or CTRLBCLR.DIR) is.

Non-recoverable Fault Event Action

Non-recoverable fault actions can be selected in the Event Control register (EVCTRL.EVACTx=0x7, FAULT). When received, the counter will be stopped and the output of the compare channels is overridden according to the Driver Control register settings (DRVCTRL.NREx and DRVCTRL.NRVx). TCE0 and TCE1 must be configured as asynchronous events.

Event Action Off

If the event action is disabled (EVCTRL.EVACTx=0x0, OFF), enabling the counter will also start the counter.

34.6.2.5 Compare Operations

By default, the Compare/Capture channel is configured for compare operations. To perform capture operations, it must be re-configured.

When using the TCC with the Compare/Capture Value registers (CCx) for compare operations, the counter value is continuously compared to the values in the CCx registers. This can be used for timer or for waveform operation.

The Channel x Compare/Capture Buffer Value (CCBUFx) registers provide double buffer capability. The double buffering synchronizes the update of the CCx register with the buffer value at the UPDATE condition or a force update command (CTRLBSET.CMD=0x3, UPDATE). For further details, refer to 34.6.2.6 Double Buffering. The synchronization prevents the occurrence of odd-length, non-symmetrical pulses and ensures glitch-free output.

34.6.2.5.1 Waveform Output Generation Operations

The compare channels can be used for waveform generation on output port pins. To make the waveform available on the connected pin, the following requirements must be fulfilled:

1. Choose a waveform generation mode in the Waveform Generation Operation bit in Waveform register (WAVE.WAVEGEN).
2. Optionally invert the waveform output WO[x] by writing the corresponding Waveform Output x Inversion bit in the Driver Control register (DRVCTRL.INVENx).
3. Configure the pins with the I/O Pin Controller. Refer to the PORT - I/O Pin Controller for details.

Note: Event MCx must not be used when the compare channel is set in waveform output operating mode, except when used as non-recoverable fault input.

The counter value is continuously compared with each CCx value. On a comparison match, the Match or Capture Channel x bit in the Interrupt Flag Status and Clear register (INTFLAG.MCx) will be set on the next zero-to-one transition of CLK_TCC_COUNT (see Normal Frequency Operation). An interrupt and/or event can be generated on the same condition if Match/Capture occurs, i.e. INTENSET.MCx and/or EVCTRL.MCEOx is '1'. Both interrupt and event can be generated simultaneously. The same condition generates a DMA request.

There are seven waveform configurations for the Waveform Generation Operation bit group in the Waveform register (WAVE.WAVEGEN). This will influence how the waveform is generated and impose restrictions on the top value. The configurations are:

- Normal Frequency (NFRQ)
- Match Frequency (MFRQ)
- Normal Pulse-Width Modulation (NPWM)
- Dual-slope, interrupt/event at TOP (DSTOP)
- Dual-slope, interrupt/event at ZERO (DSBOTTOM)
- Dual-slope, interrupt/event at Top and ZERO (DSBOTH)
- Dual-slope, critical interrupt/event at ZERO (DSCRITICAL)

When using MFRQ configuration, the TOP value is defined by the CC0 register value. For the other waveform operations, the TOP value is defined by the Period (PER) register value.

For dual-slope waveform operations, the update time occurs when the counter reaches ZERO. For the other waveforms generation modes, the update time occurs on counter wraparound, on overflow, underflow, or re-trigger.

The table below shows the update counter and overflow event/interrupt generation conditions in different operation modes.

Table 34-3. Counter Update and Overflow Event/interrupt Conditions

Name	Operation	TOP	Update	Output Waveform		OVFIF/Event	
				On Match	On Update	Up	Down
NFRQ	Normal Frequency	PER	TOP/ ZERO	Toggle	Stable	TOP	ZERO
MFRQ	Match Frequency	CC0	TOP/ ZERO	Toggle	Stable	TOP	ZERO
NPWM	Single-slope PWM	PER	TOP/ ZERO	See section 'Output Polarity' below		TOP	ZERO
DSCRITICAL	Dual-slope PWM	PER	ZERO			-	ZERO
DSBOTTOM	Dual-slope PWM	PER	ZERO			-	ZERO
DSBOTH	Dual-slope PWM	PER	TOP(1) & ZERO			TOP	ZERO
DSTOP	Dual-slope PWM	PER	ZERO			TOP	–

1. The UPDATE condition on TOP only will occur when circular buffer is enabled for the channel.

34.6.2.5.2 Normal Frequency (NFRQ)

For Normal Frequency generation, the period time (T) is controlled by the period register (PER). The waveform generation output (WO[x]) is toggled on each compare match between COUNT and CCx, and the corresponding Match or Capture Channel x Interrupt Flag (EVCTRL.MCEOx) will be set.

Figure 34-4. Normal Frequency Operation

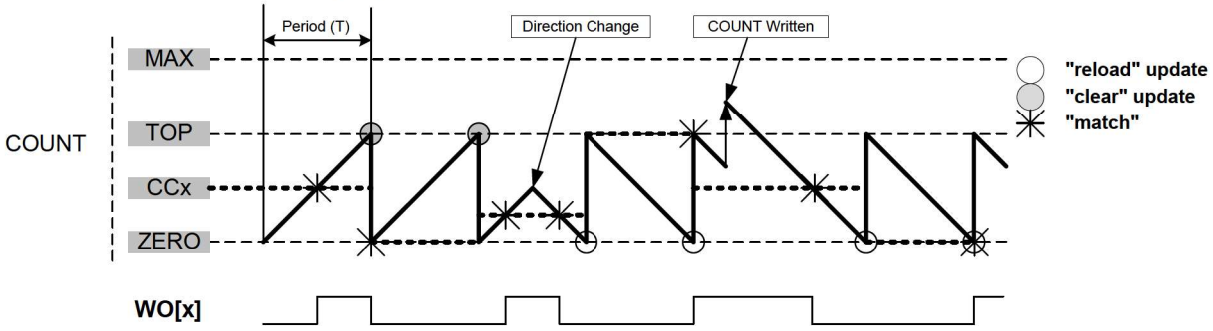

34.6.2.5.3 Match Frequency (MFRQ)

For Match Frequency generation, the period time (T) is controlled by CC0 register instead of PER. WO[0] toggles on each update condition.

Figure 34-5. Match Frequency Operation

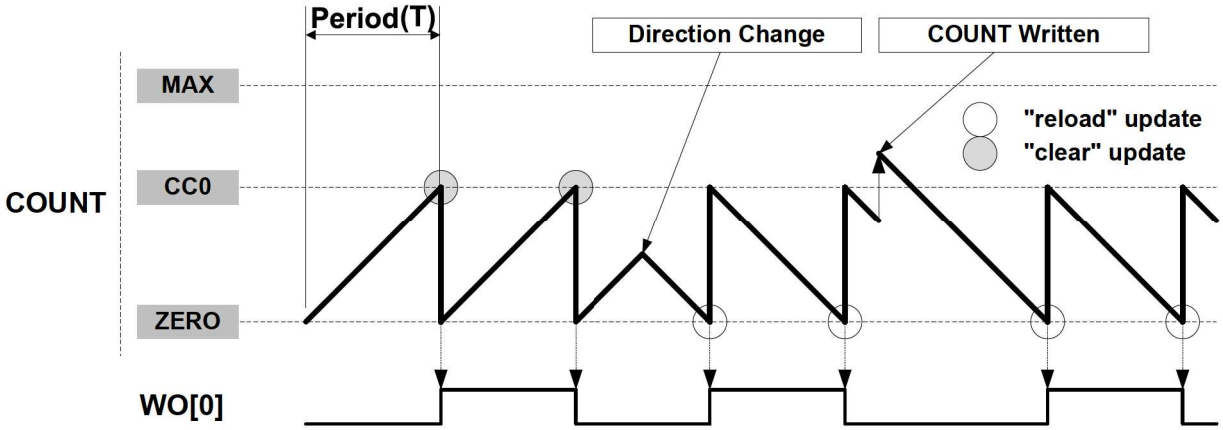

34.6.2.5.4 Normal Pulse-Width Modulation (NPWM)

NPWM uses single-slope PWM generation.

34.6.2.5.5 Single-Slope PWM Operation

For single-slope PWM generation, the period time (T) is controlled by Top value, and CCx controls the duty cycle of the generated waveform output. When up-counting, the WO[x] is set at start or compare match between the COUNT and TOP values, and cleared on compare match between COUNT and CCx register values. When down-counting, the WO[x] is cleared at start or compare match between the COUNT and ZERO values, and set on compare match between COUNT and CCx register values.

Figure 34-6. Single-Slope PWM Operation

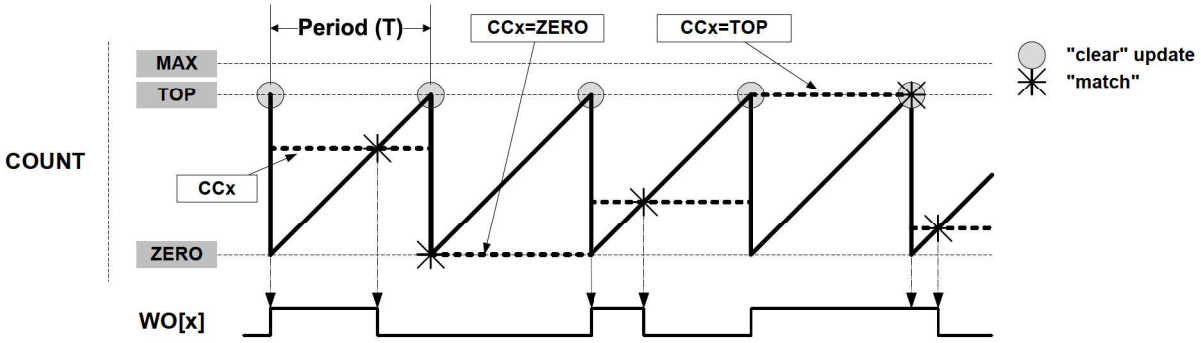

The following equation calculates the exact resolution for a single-slope PWM (R_{PWM_SS}) waveform:

$$R_{PWM_SS} = \frac{\log(TOP+1)}{\log(2)}$$

The PWM frequency depends on the Period register value (PER) and the peripheral clock frequency (f_{GCLK_TCC}), and can be calculated by the following equation:

$$f_{PWM_SS} = \frac{f_{GCLK_TCC}}{N(TOP+1)}$$

Where N represents the prescaler divider used (1, 2, 4, 8, 16, 64, 256, 1024).

34.6.2.5.6 Dual-Slope PWM Generation

For dual-slope PWM generation, the period setting (TOP) is controlled by PER, while CCx control the duty cycle of the generated waveform output. The figure below shows how the counter repeatedly counts from ZERO to PER and then from PER to ZERO. The waveform generator output is set on compare match when up-counting, and cleared on compare match when down-counting. An interrupt and/or event is generated on TOP (when counting upwards) and/or ZERO (when counting up or down).

In DSBOTH operation, the circular buffer must be enabled to enable the update condition on TOP.

Figure 34-7. Dual-Slope Pulse Width Modulation

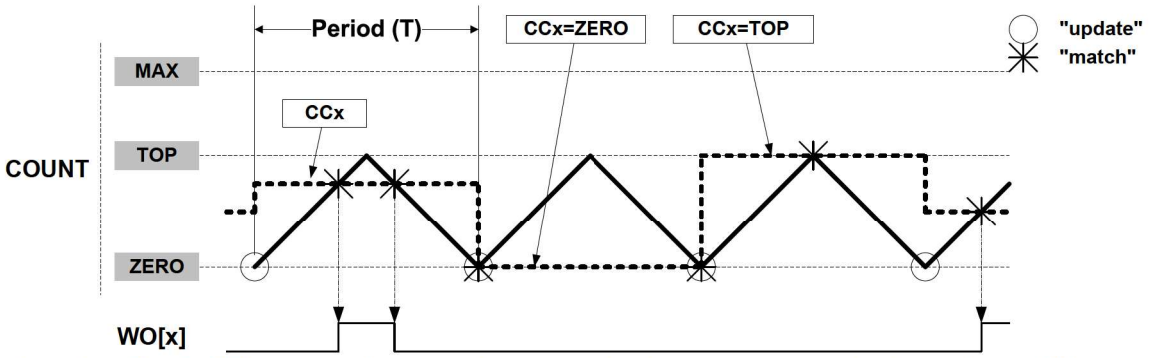

Using dual-slope PWM results in a lower maximum operation frequency compared to single-slope PWM generation. The period (TOP) defines the PWM resolution. The minimum resolution is 1 bit (TOP=0x00000001).

The following equation calculates the exact resolution for dual-slope PWM (R_{PWM_DS}):

$$R_{PWM_DS} = \frac{\log(TOP+1)}{\log(2)}.$$

The PWM frequency f_{PWM_DS} depends on the period setting (TOP) and the peripheral clock frequency f_{GCLK_TCC}, and can be calculated by the following equation (outside of DSBOTH mode):

$$f_{PWM_DS} = \frac{f_{GCLK_TCC}}{2N \cdot TOP}$$

N represents the prescaler divider used. The waveform generated will have a maximum frequency of half of the TCC clock frequency (f_{GCLK_TCC}) when TOP is set to 0x00000001 and no prescaling is used.

The pulse width (P_{PWM_DS}) depends on the compare channel (CCx) register value and the peripheral clock frequency (f_{GCLK_TCC}), and can be calculated by the following equation:

$$P_{PWM_DS} = \frac{2N \cdot (TOP - CCx)}{f_{GCLK_TCC}}$$

N represents the prescaler divider used.

Note: In DSTOP, DSBOTTOM and DSBOTH operation, when TOP is lower than MAX/2, the CCx MSB bit defines the ramp on which the CCx Match interrupt or event is generated. (Rising if CCx[MSB] = 0, falling if CCx[MSB] = 1.)

34.6.2.5.7 Dual-Slope Critical PWM Generation

Critical mode generation allows generation of non-aligned centered pulses. In this mode, the period time (TOP) is controlled by PER while CCx control the generated waveform output edge during up-counting and CC(x+CC_NUM/2) control the generated waveform output edge during down-counting.

Figure 34-8. Dual-Slope Critical Pulse Width Modulation (N=CC_NUM)

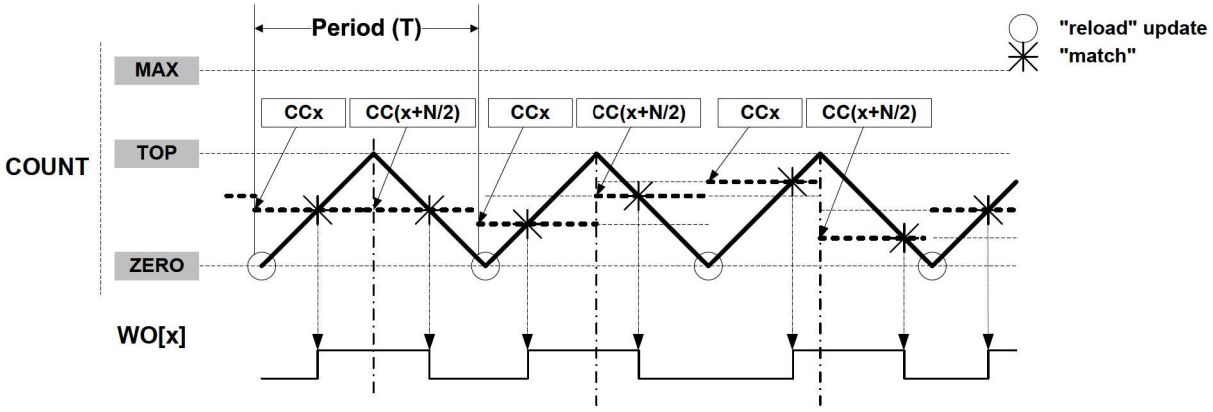

34.6.2.5.8 Output Polarity

The polarity (WAVE.POLx) is available in all waveform output generation. In single-slope and dual-slope PWM operation, it is possible to invert the pulse edge alignment individually on start or end of a PWM cycle for each compare channels. The table below shows the waveform output set/clear conditions, depending on the settings of timer/counter, direction, and polarity.

Table 34-4. Waveform Generation Set/Clear Conditions

Waveform Generation operation	DIR	POLx	Waveform Generation Output Update	
			Set	Clear
Single-Slope PWM	0	0	Timer/counter matches TOP	Timer/counter matches CCx
		1	Timer/counter matches CC	Timer/counter matches TOP
	1	0	Timer/counter matches CC	Timer/counter matches ZERO
		1	Timer/counter matches ZERO	Timer/counter matches CC
Dual-Slope PWM	x	0	Timer/counter matches CC when counting up	Timer/counter matches CC when counting down
		1	Timer/counter matches CC when counting down	Timer/counter matches CC when counting up

In Normal and Match Frequency, the WAVE.POLx value represents the initial state of the waveform output.

34.6.2.6 Double Buffering

The Pattern (PATT), Period (PER) and Compare Channels (CCx) registers are all double buffered. Each buffer register has a buffer valid (PATTBUFV, PERBUFV and CCBUFVx) bit in the STATUS register, which indicates that the Buffer register contains a valid value that can be copied into the corresponding register. As long as the respective Buffer Valid Status flag (PATTBUFV, PERBUFV or CCBUFVx) are set to '1', the related SYNCBUSY bits are set (SYNCBUSY.PATT, SYNCBUSY.PER or SYNCBUSY.CCx), a write to the respective PATT/PATTBUF, PER/PERBUF or CCx/CCBUFx registers will generate a PAC error, and read access to the respective PATT, PER or CCx register is invalid.

When the Buffer Valid Flag bit in the STATUS register is '1' and the Lock Update bit in the CTRLB register is set to '0', (writing CTRLBCLR.LUPD to '1'), double buffering is enabled: the data from buffer registers will be copied into the corresponding register under hardware UPDATE conditions, then the Buffer Valid Flags bit in the STATUS register are automatically cleared by hardware. The buffer valid flag bits in the STATUS register can be cleared manually, but must be cleared two times successively.

Note: Software update command (CTRLBSET.CMD=0x3) act independently of LUPD value.

A compare register is double buffered as in the following figure.

Figure 34-9. Compare Channel Double Buffering

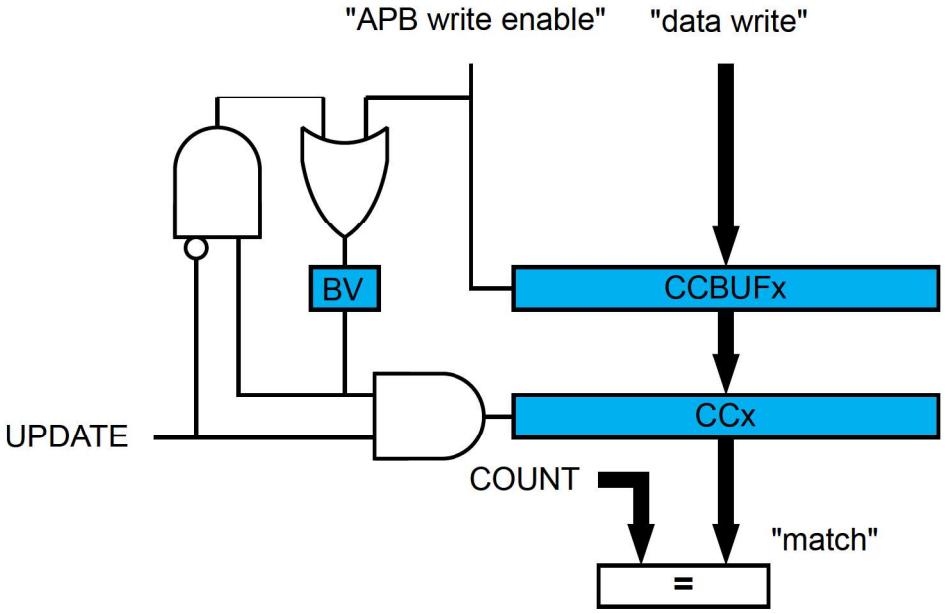

Both the registers (PATT/PER/CCx) and corresponding Buffer registers (PATTBUF/PERBUF/CCBUFx) are available in the I/O register map, and the double buffering feature is not mandatory. The double buffering is disabled by writing a '1' to CTRLSET.LUPD.

Note: When NFRQ, MFRQ or PWM down-counting counter mode (CTRLBSET.DIR=1), is enabled and double buffering is enabled (CTRLBCLR.LUPD=1), PERBUF register is continuously copied into the PER independently of update conditions.

Figure 34-10. Unbuffered Single-Slope Up-Counting Operation

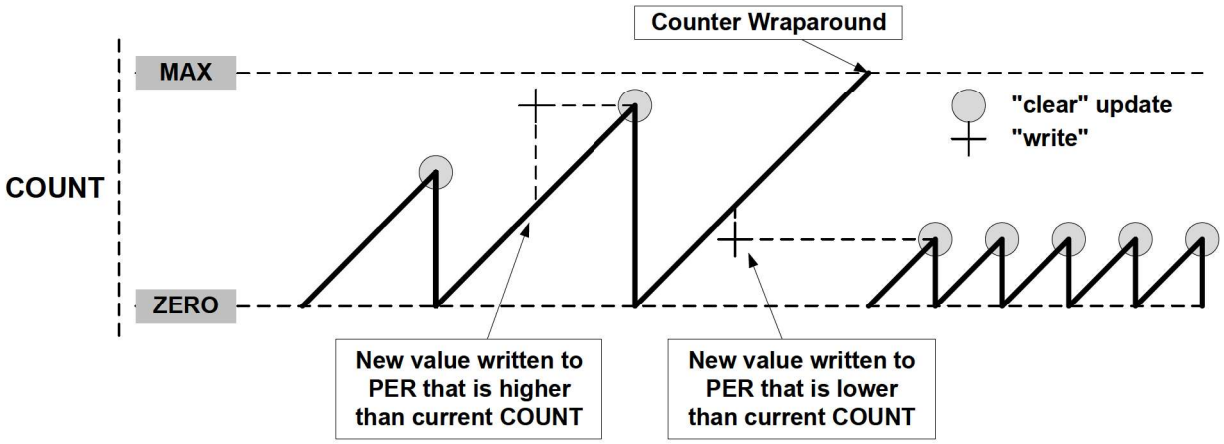

Figure 34-11. Unbuffered Single-Slope Down-Counting Operation

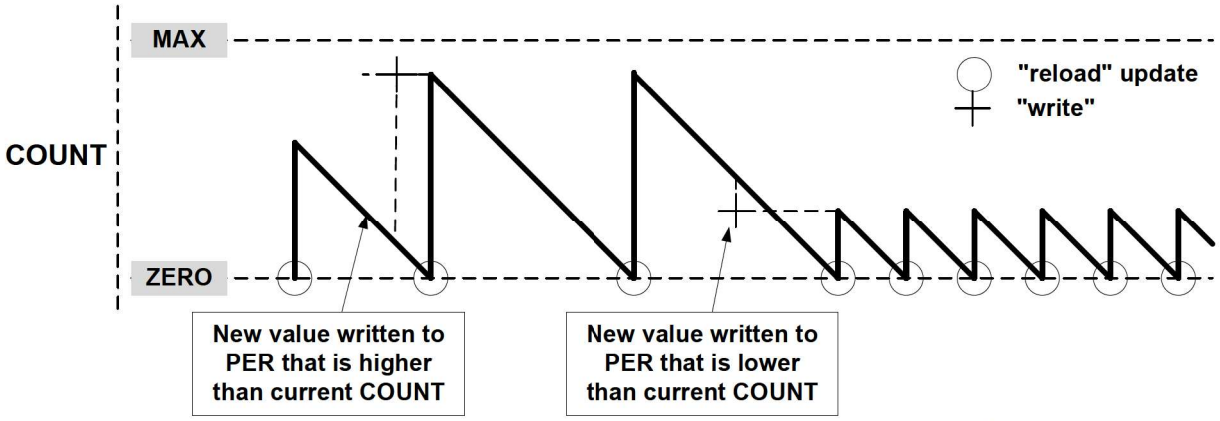

A counter wraparound can occur in any operation mode when up-counting without buffering. COUNT and TOP are continuously compared, so when a new value that is lower than the current COUNT is written to TOP, COUNT will wrap before a compare match.

Figure 34-12. Unbuffered Dual-Slope Operation

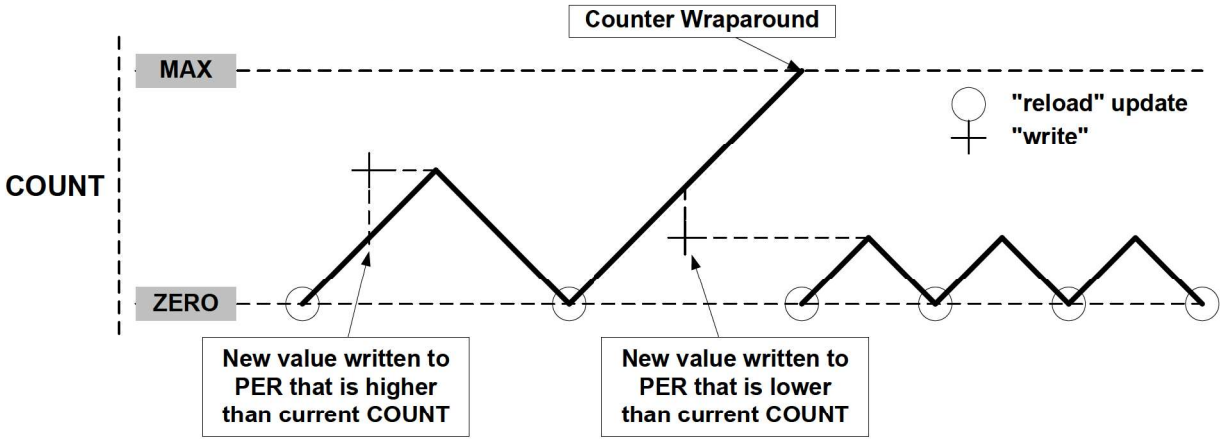

When double buffering is used, the buffer can be written at any time and the counter will still maintain correct operation. The period register is always updated on the update condition, as shown in the following figure. This prevents wraparound and the generation of odd waveforms.

Figure 34-13. Changing the Period Using Buffering

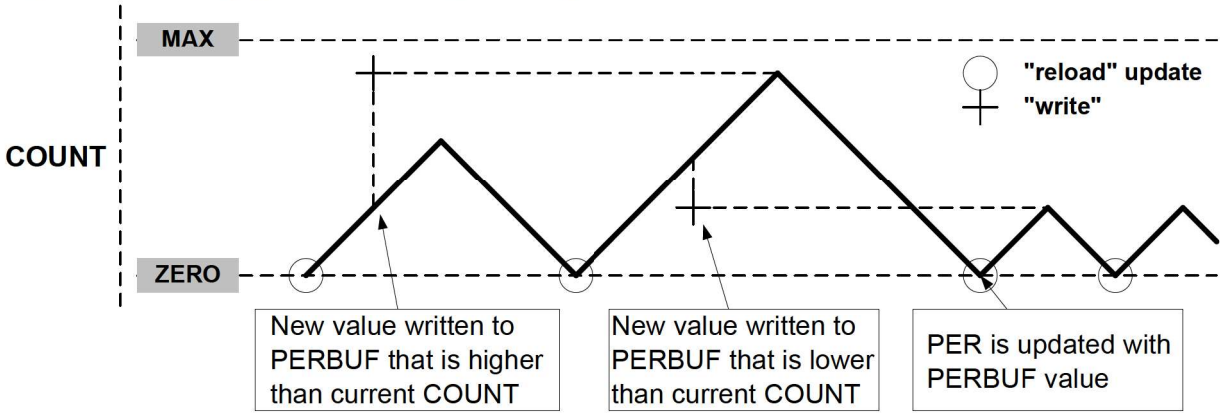

34.6.2.7 Capture Operations

To enable and use capture operations, the Match or Capture Channel x Event Input Enable bit in the Event Control register (EVCTRL.MCEIx) must be written to '1'. The capture channels to be used must also be enabled in the Capture Channel x Enable bit in the Control A register (CTRLA.CPTENx) before capturing can be performed. Event system channels must be configured to operate in asynchronous mode of operation when used for capture operations.

Event Capture Action

The compare/capture channels can be used as input capture channels to capture events from the Event System, and give them a timestamp. The following figure shows four capture events for one capture channel.

Figure 34-14. Input Capture Timing

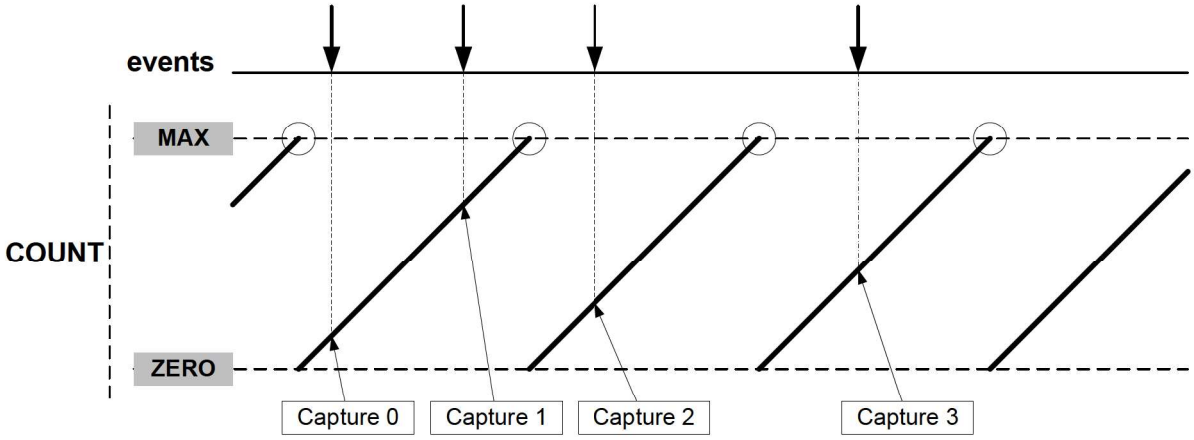

For input capture, the buffer register and the corresponding CCx act like a FIFO. When CCx is empty or read, any content in CCBUFx is transferred to CCx. The buffer valid flag is passed to set the CCx interrupt flag (IF) and generate the optional interrupt, event or DMA request. CCBUFx register value can't be read, all captured data must be read from CCx register.

Figure 34-15. Capture Double Buffering

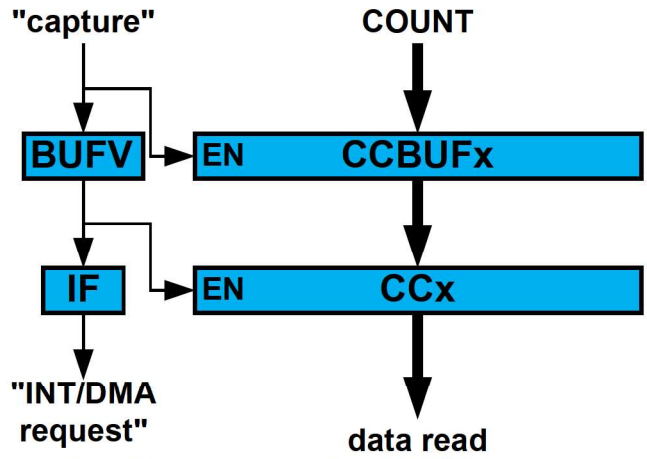

The TCC can detect capture overflow of the input capture channels: When a new capture event is detected while the Capture Buffer Valid flag (STATUS.CCBUFV) is still set, the new timestamp will not be stored and INTFLAG.ERR will be set.

Period and Pulse-Width (PPW) Capture Action

The TCC can perform two input captures and restart the counter on one of the edges. This enables the TCC to measure the pulse-width and period and to characterize the frequency *f* and *dutyCycle* of an input signal:

$f = \frac{1}{T}$, $dutyCycle = \frac{t_p}{T}$

Figure 34-16. PWP Capture

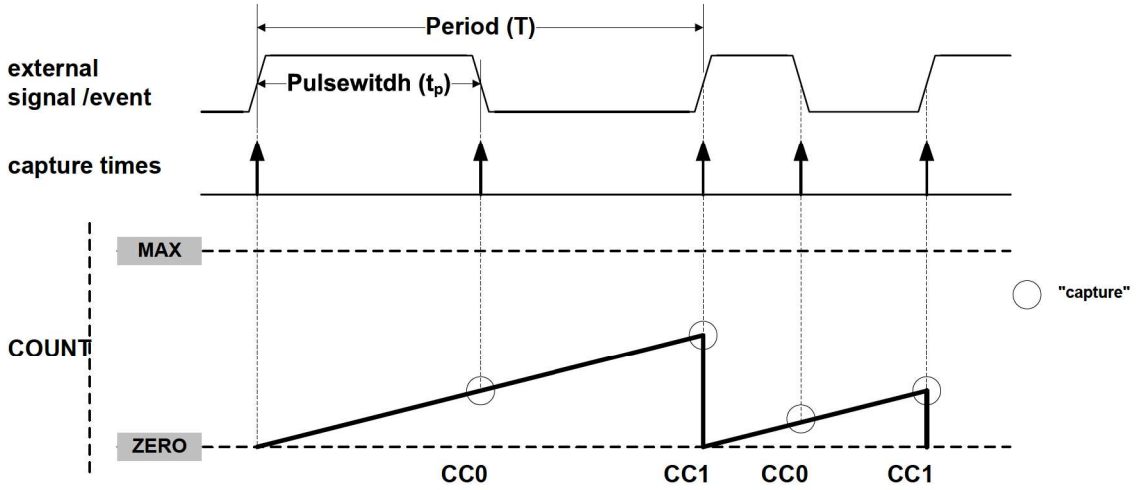

Selecting PWP or PPW in the Timer/Counter Event Input 1 Action bit group in the Event Control register (EVCTRL.EVACT1) enables the TCC to perform one capture action on the rising edge and the other one on the falling edge. When using PPW (period and pulse-width) event action, period *T* will be captured into CC0 and the pulse-width t_p into CC1. The PWP (Pulse-width and Period) event action offers the same functionality, but *T* will be captured into CC1 and t_p into CC0.

The Timer/Counter Event x Invert Enable bit in Event Control register (EVCTRL.TCEINVx) is used for event source x to select whether the wraparound should occur on the rising edge or the falling edge. If EVCTRL.TCEINVx=1, the wraparound will happen on the falling edge.

The corresponding capture is done only if the channel is enabled in capture mode (CTRLA.CPTENx=1). If not, the capture action will be ignored and the channel will be enabled in compare mode of operation. When only one of these channel is required, the other channel can be used for other purposes.

The TCC can detect capture overflow of the input capture channels: When a new capture event is detected while the INTFLAG.MCx is still set, the new timestamp will not be stored and INTFLAG.ERR will be set.

Note: When up-counting (CTRLBSET.DIR=0), counter values lower than 1 cannot be captured in Capture Minimum mode (FCTRLn.CAPTURE=CAPTMIN). To capture the full range including value 0, the TCC must be configured in down-counting mode (CTRLBSET.DIR=0).

Note: In dual-slope PWM operation, and when TOP is lower than MAX/2, the CCx MSB captures the CTRLB.DIR state to identify the ramp on which the capture has been done. For rising ramps CCx[MSB] is zero, for falling ramps CCx[MSB]=1.

34.6.3 Additional Features

34.6.3.1 One-Shot Operation

When one-shot is enabled, the counter automatically stops on the next counter overflow or underflow condition. When the counter is stopped, the Stop bit in the Status register (STATUS.STOP) is set and the waveform outputs are set to the value defined by DRVCTRL.NREx and DRVCTRL.NRVx.

One-shot operation can be enabled by writing a '1' to the One-Shot bit in the Control B Set register (CTRLBSET.ONESHOT) and disabled by writing a '1' to CTRLBCLR.ONESHOT. When enabled, the TCC will count until an overflow or underflow occurs and stop counting. The one-shot operation can be restarted by a re-trigger software command, a re-trigger event or a start event. When the counter restarts its operation, STATUS.STOP is automatically cleared.

34.6.3.2 Circular Buffer

The Period register (PER) and the compare channels register (CC0 to CC3) support circular buffer operation. When circular buffer operation is enabled, the PER or CCx values are copied into the corresponding buffer registers at each update condition. Circular buffering is dedicated to RAMP2, RAMP2A, and DSBOTH operations.

Figure 34-17. Circular Buffer on Channel 0

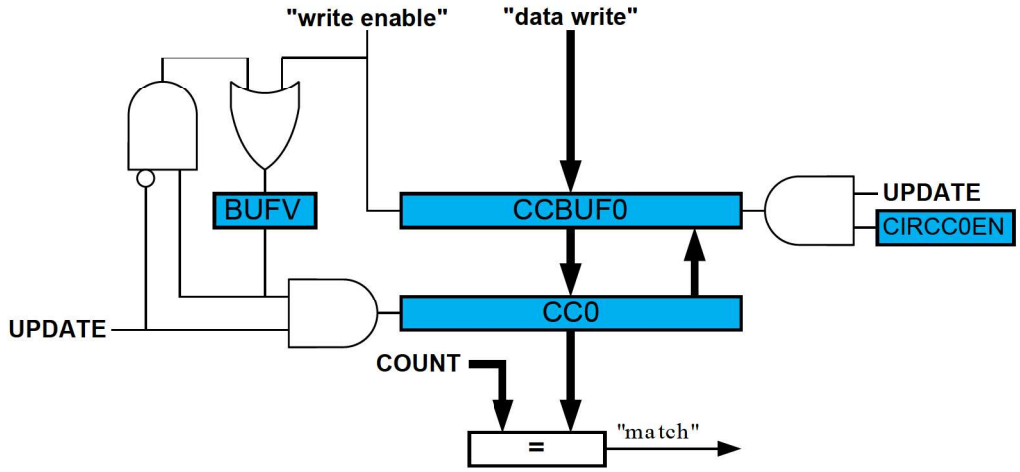

34.6.3.3 Dithering Operation

The TCC supports dithering on Pulse-width or Period on a 16, 32 or 64 PWM cycles frame. The TCC does not support dithering with any RAMP2 operation.

Dithering consists in adding some extra clocks cycles in a frame of several PWM cycles, and can improve the accuracy of the *average* output pulse width and period. The extra clock cycles are added on some of the compare match signals, one at a time, through a "blue noise" process that minimizes the flickering on the resulting dither patterns. The use of dithering with an external retrigger event (EVCTRL.EVACTx) is not possible as the event can lead to unexpected stretch of right aligned pulses, or shrinking of left aligned pulses.

Dithering is enabled by writing the corresponding configuration in the Enhanced Resolution bits in CTRLA register (CTRLA.RESOLUTION):

- DITH4 enable dithering every 16 PWM frames
- DITH5 enable dithering every 32 PWM frames
- DITH6 enable dithering every 64 PWM frames

The DITHERCY bits of COUNT, PER and CCx define the dithercy increment value and so the number of extra cycles to add into the frame (DITHERCY bits from the respective COUNT, PER or CCx registers). The remaining bits of COUNT, PER, CCx define the compare value itself.

The pseudo code, giving the extra cycles insertion regarding the cycle is:

```
int extra_cycle(resolution, dithercy, cycle){
  int MASK;
  int value
  switch (resolution){
    DITH4: MASK = 0x0f;
    DITH5: MASK = 0x1f;
    DITH6: MASK = 0x3f;
  }
  value = cycle * dithercy;
  if (((MASK & value) + dithercy) > MASK)
    return 1;
 return 0;
}
```

Dithering on Period

Writing DITHERCY in PER will lead to an average PWM period configured by the following formulas.

DITH4 mode:

$$PwmPeriod = \left(\frac{\text{DITHERCY}}{16} + \text{PER}\right)\left(\frac{1}{f_{\text{GCLK_TCC}}}\right)$$

Note: If DITH4 mode is enabled, the last 4 significant bits from PER/CCx register correspond to the DITHERCY value (the last 4 significant bits from COUNT are always read as 0), rest of the bits corresponds to PER/CCx or COUNT value.

DITH5 mode:

$$PwmPeriod = \left(\frac{\text{DITHERCY}}{32} + \text{PER}\right)\left(\frac{1}{f_{\text{GCLK_TCC}}}\right)$$

DITH6 mode:

$$PwmPeriod = \left(\frac{\text{DITHERCY}}{64} + \text{PER}\right)\left(\frac{1}{f_{\text{GCLK_TCC}}}\right)$$

Dithering on Pulse Width

Writing DITHERCY in CCx will lead to an average PWM pulse width configured by the following formula.

DITH4 mode:

$$PwmPulseWidth = \left(\frac{\text{DITHERCY}}{16} + \text{CCx}\right)\left(\frac{1}{f_{\text{GCLK_TCC}}}\right)$$

DITH5 mode:

$$PwmPulseWidth = \left(\frac{\text{DITHERCY}}{32} + \text{CCx}\right)\left(\frac{1}{f_{\text{GCLK_TCC}}}\right)$$

DITH6 mode:

$$PwmPulseWidth = \left(\frac{\text{DITHERCY}}{64} + \text{CCx}\right)\left(\frac{1}{f_{\text{GCLK_TCC}}}\right)$$

Note: The PWM period will remain static in this case.

34.6.3.4 Ramp Operations

Three ramp operation modes are supported. All of them require the timer/counter running in single-slope PWM generation. The ramp mode is selected by writing to the Ramp Mode bits in the Waveform Control register (WAVE.RAMP).

RAMP1 Operation

This is the default PWM operation, described in Single-Slope PWM Generation.

RAMP2 Operation

These operation modes are dedicated for power factor correction (PFC), Half-Bridge and Push-Pull SMPS topologies, where two consecutive timer/counter cycles are interleaved. In cycle A, odd channel output is disabled, and in cycle B, even channel output is disabled. The ramp index changes after each update, but can be software modified using the Ramp index command bits in Control B Set register (CTRLBSET.IDXCMD). All RAMP2 operations only support counting up mode (CTRLB.DIR = 0).

Standard RAMP2 (RAMP2) Operation

Ramp A and B periods are controlled by the PER register value. The PER value can be different on each ramp by the Circular Period buffer option in the Wave register (WAVE.CIPEREN=1). This mode uses a two-channel TCC to generate two output signals.

Figure 34-18. RAMP2 Standard Operation

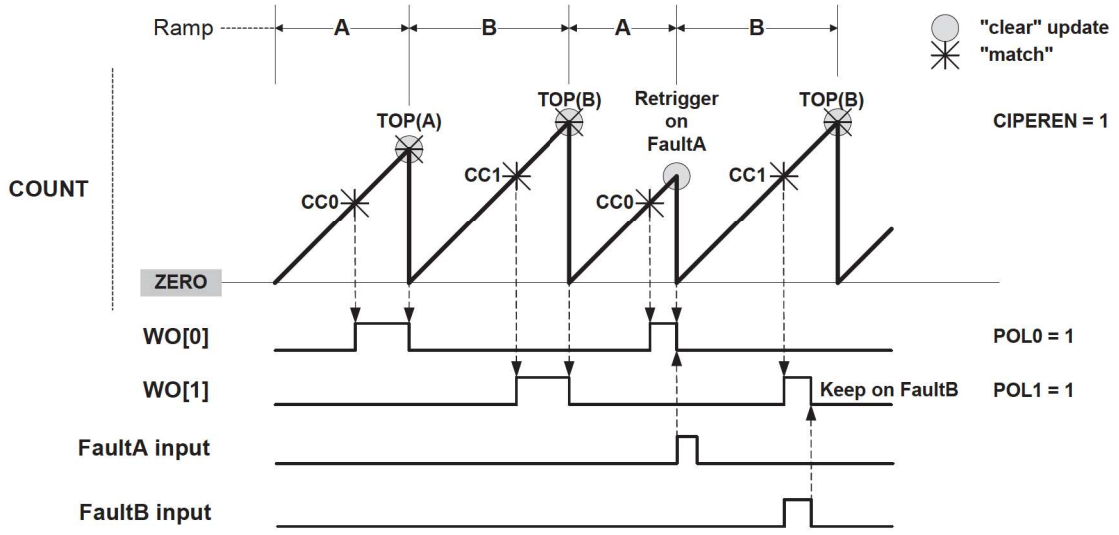

Alternate RAMP2 (RAMP2A) Operation

Alternate RAMP2 operation is similar to RAMP2, but CC0 controls both WO[0] and WO[1] waveforms when the corresponding circular buffer option is enabled (CIPEREN=1). The waveform polarity is the same on both outputs. Channel 1 can be used in capture mode.

Figure 34-19. RAMP2 Alternate Operation

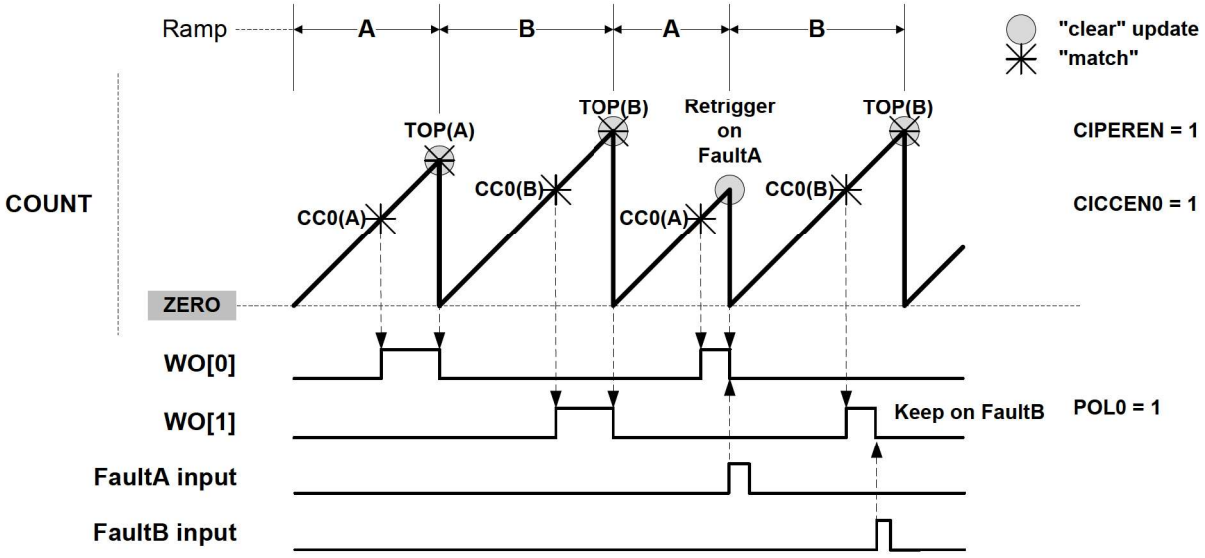

Critical RAMP2 (RAMP2C) Operation

Critical RAMP2 operation provides a way to cover RAMP2 operation requirements without the update constraint associated with the use of circular buffers. In this mode, CC0 is controlling the period of ramp A and PER is controlling the period of ramp B. When using more than two channels, WO[0] output is controlled by CC2 (HIGH) and CC0 (LOW). On TCC with 2 channels, a pulse on WO[0] will last the entire period of ramp A, if WAVE.POL0=0.

Figure 34-20. RAMP2 Critical Operation With More Than 2 Channels

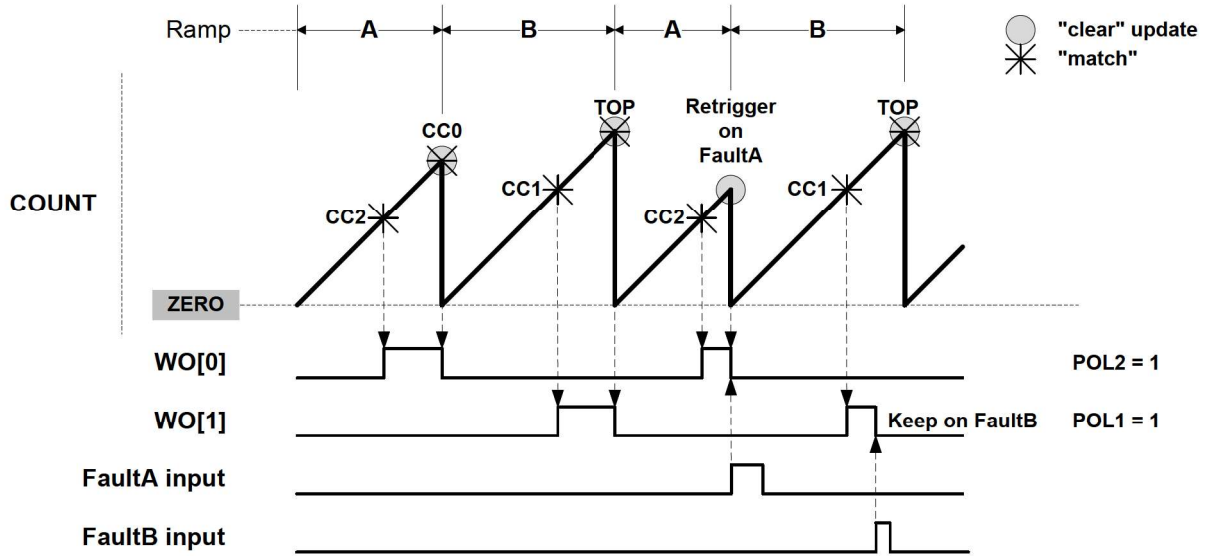

Figure 34-21. RAMP2 Critical Operation With 2 Channels

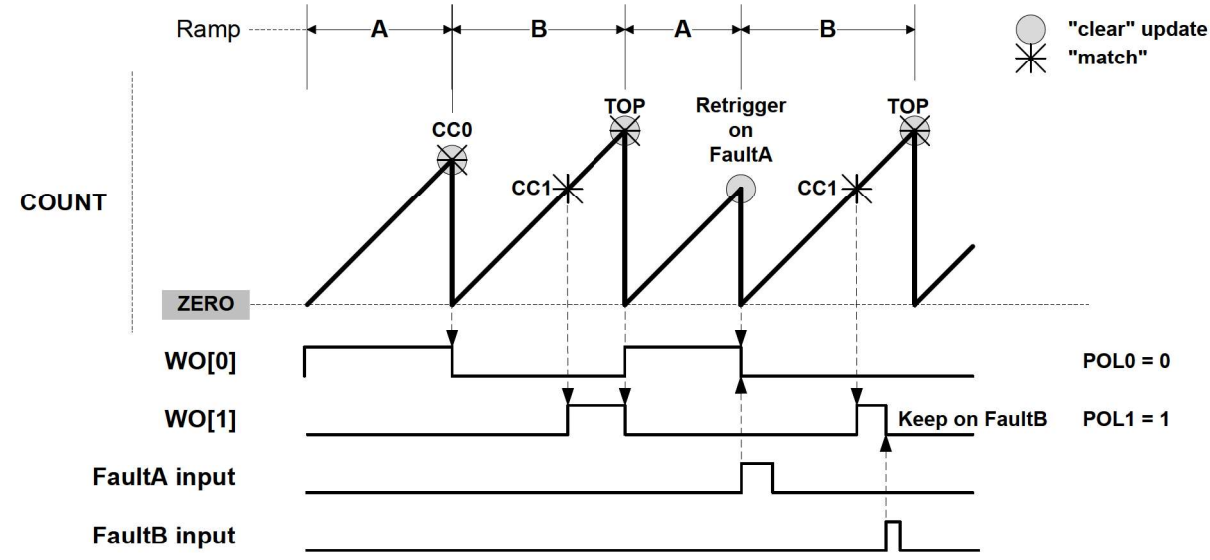

34.6.3.5 Recoverable Faults

Recoverable faults can restart or halt the timer/counter. Two faults, called Fault A and Fault B, can trigger recoverable fault actions on the compare channels CC0 and CC1 of the TCC. The compare channels' outputs can be clamped to inactive state either as long as the fault condition is present, or from the first valid fault condition detection on until the end of the timer/counter cycle.

Fault Inputs

The first two channel input events (TCCxMC0 and TCCxMC1) can be used as Fault A and Fault B inputs, respectively. Event system channels connected to these fault inputs must be configured as asynchronous. The TCC must work in a PWM mode.

Fault Filtering

There are three filters available for each input Fault A and Fault B. They are configured by the corresponding Recoverable Fault n Configuration registers (FCTRLA and FCTRLB). The three filters can either be used independently or in any combination.

Input Filtering

By default, the event detection is asynchronous. When the event occurs, the fault system will immediately and asynchronously perform the selected fault action on the compare channel output, also in device power modes where the clock is not available. To avoid false fault detection on external events (e.g. due to a glitch on an I/O port) a digital filter can be enabled and configured by the Fault B Filter Value bits in the Fault n Configuration registers (FCTRLn.FILTERVAL). If the event width is less than FILTERVAL (in clock cycles), the event will be discarded. A valid event will be delayed by FILTERVAL clock cycles.

Fault Blanking

This ignores any fault input for a certain time just after a selected waveform output edge. This can be used to prevent false fault triggering due to signal bouncing, as shown in the figure below. Blanking can be enabled by writing an edge triggering configuration to the Fault n Blanking Mode bits in the Recoverable Fault n Configuration register (FCTRLn.BLANK). The desired duration of the blanking must be written to the Fault n Blanking Time bits (FCTRLn.BLANKVAL).
The blanking time, t_b is calculated by

$$t_b = \frac{1 + \text{BLANKVAL}}{f_{\text{GCLK_TCCx_PRESC}}}$$

Where,

$f_{\text{GCLK_TCCx_PRESC}}$ is the frequency of the prescaled peripheral clock frequency $f_{\text{GCLK_TCCx}}$. The prescaler is enabled by writing '1' to the Fault n Blanking Prescaler bit (FCTRLn.BLANKPRESC). When disabled, $f_{\text{GCLK_TCCx_PRESC}}=f_{\text{GCLK_TCCx}}$. When enabled, $f_{\text{GCLK_TCCx_PRESC}}=f_{\text{GCLK_TCCx}}/64$.

The maximum blanking time (FCTRLn.BLANKVAL=
255) at $f_{\text{GCLK_TCCx}}$=96MHz is 2.67µs (no prescaler) or 170µs (prescaling). For $f_{\text{GCLK_TCCx}}$=1MHz, the maximum blanking time is either 170µs (no prescaling) or 10.9ms (prescaling enabled).

Figure 34-22. Fault Blanking in RAMP1 Operation with Inverted Polarity

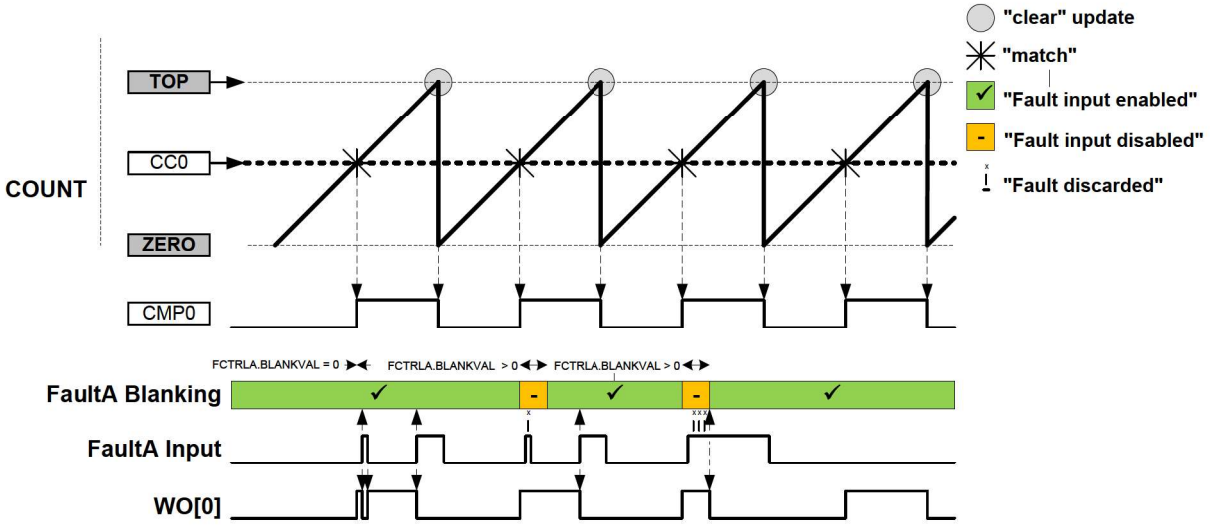

Fault Qualification

This is enabled by writing a '1' to the Fault n Qualification bit in the Recoverable Fault n Configuration register (FCTRLn.QUAL). When the recoverable fault qualification is enabled (FCTRLn.QUAL=1), the fault input is disabled all the time the corresponding channel output has an inactive level, as shown in the figures below.

Figure 34-23. Fault Qualification in RAMP1 Operation

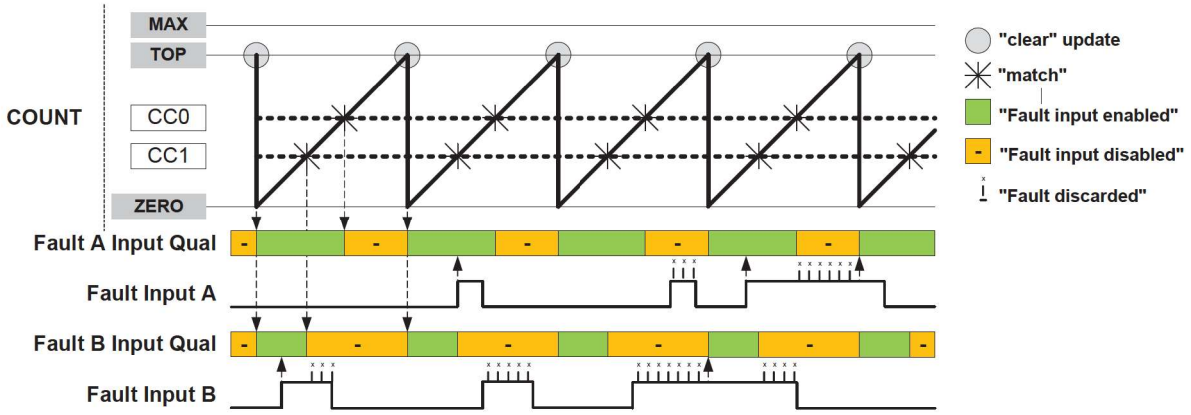

Figure 34-24. Fault Qualification in RAMP2 Operation with Inverted Polarity

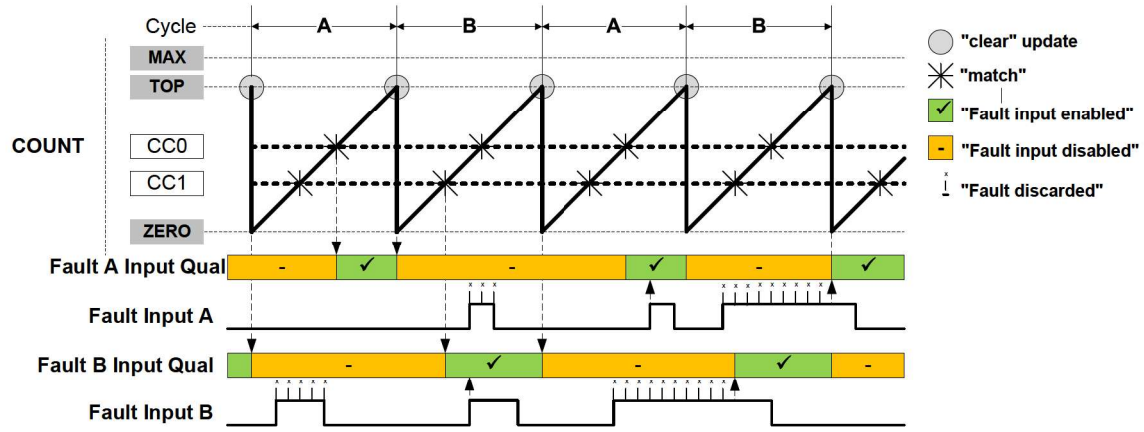

Fault Actions

Different fault actions can be configured individually for Fault A and Fault B. Most fault actions are not mutually exclusive; therefore two or more actions can be enabled at the same time to achieve a result that is a combination of fault actions.

Keep Action This is enabled by writing the Fault n Keeper bit in the Recoverable Fault n Configuration register (FCTRLn.KEEP) to '1'. When enabled, the corresponding channel output will be clamped to zero as long as the fault condition is present. The clamp will be released on the start of the first cycle after the fault condition is no longer present, see next Figure.

Figure 34-25. Waveform Generation with Fault Qualification and Keep Action

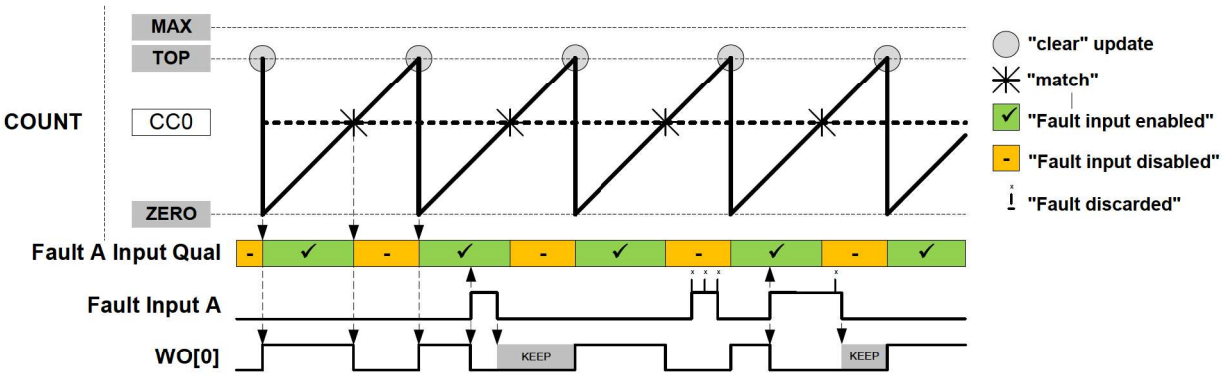

Restart Action

This is enabled by writing the Fault n Restart bit in Recoverable Fault n Configuration register (FCTRLn.RESTART) to '1'. When enabled, the timer/counter will be restarted as soon as the corresponding fault condition is present. The ongoing cycle is stopped and the timer/counter starts a new cycle, see the following figures. In Ramp 1 mode, when the new cycle starts, the compare outputs will be clamped to inactive level as long as the fault condition is present.

Note: For RAMP2 operation, when a new timer/counter cycle starts the cycle index will change automatically, see the following figures. Fault A and Fault B are qualified only during the cycle A and cycle B respectively: Fault A is disabled during cycle B, and Fault B is disabled during cycle A.

Figure 34-26. Waveform Generation in RAMP1 mode with Restart Action

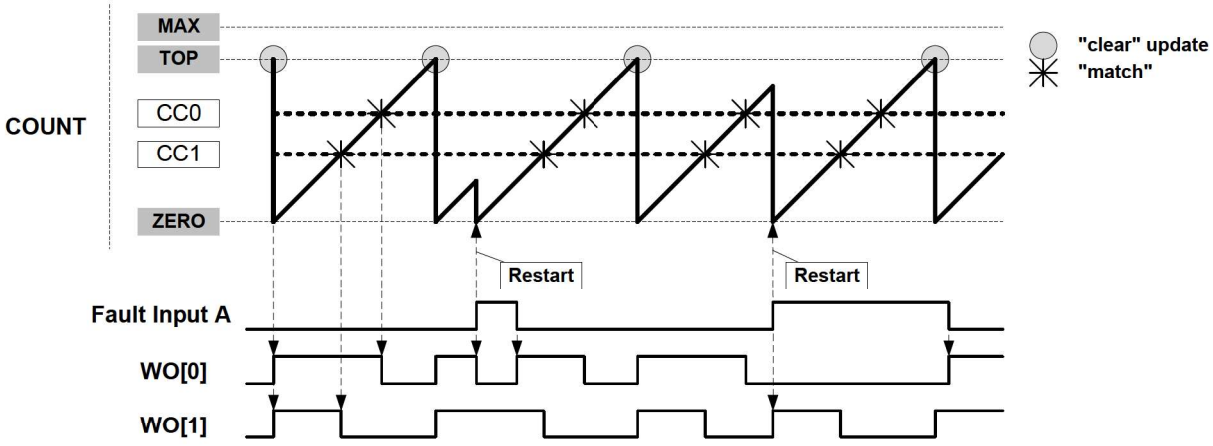

Figure 34-27. Waveform Generation in RAMP2 mode with Restart Action

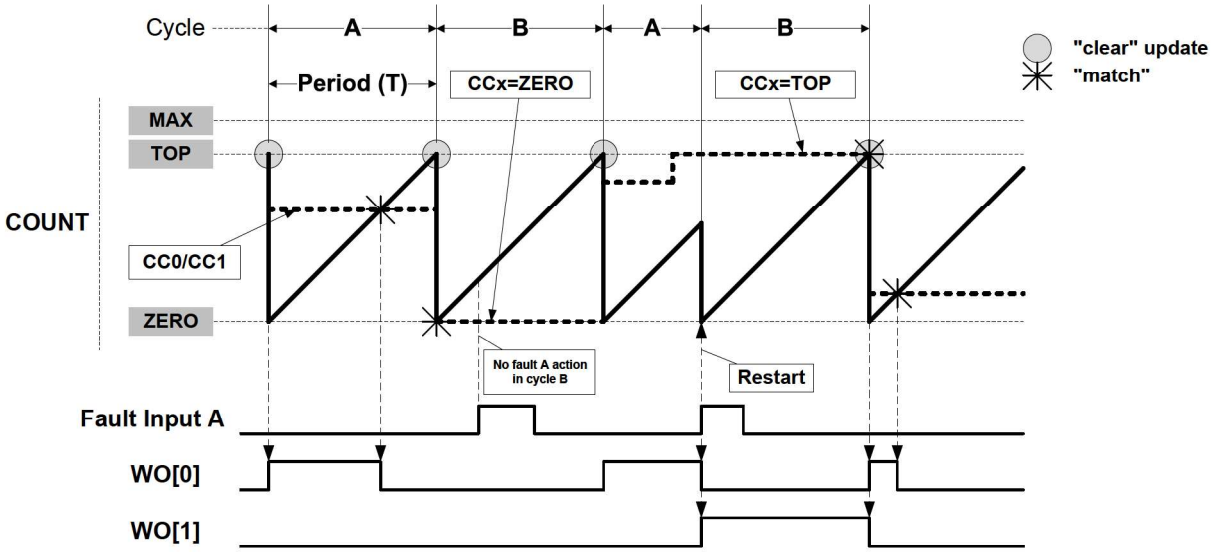

Capture Action

Several capture actions can be selected by writing the Fault n Capture Action bits in the Fault n Control register (FCTRLn.CAPTURE). When one of the capture operations is selected, the counter value is captured when the fault occurs. These capture operations are available:

- CAPT - The equivalent to a standard capture operation, for further details refer to 34.6.2.7 Capture Operations
- CAPTMIN - Gets the minimum time stamped value: on each new local minimum captured value, an event or interrupt is issued.

- CAPTMAX - Gets the maximum time stamped value: on each new local maximum captured value, an event or interrupt (IT) is issued. For additional information, refer to the following figure Capture Action “CAPTMAX”.
- LOCMIN - Notifies by event or interrupt when a local minimum captured value is detected.
- LOCMAX - Notifies by event or interrupt when a local maximum captured value is detected.
- DERIV0 - Notifies by event or interrupt when a local extreme captured value is detected, For more information, reference the following figure Capture Action “DERIV0”.

CCx Content:

In CAPTMIN and CAPTMAX operations, CCx keeps the respective extreme captured values, For more information, reference the following figure Capture Action “CAPTMAX”. In LOCMIN, LOCMAX or DERIV0 operation, CCx follows the counter value at fault time, For more information, reference the following figure Capture Action “DERIV0”.

Before enabling CAPTMIN or CAPTMAX mode of capture, the user must initialize the corresponding CCx register value to a value different from zero (for CAPTMIN) or top (for CAPTMAX). If the CCx register initial value is zero (for CAPTMIN) or top (for CAPTMAX), no captures will be performed using the corresponding channel.

When using advanced capture functions like CAPTMIN, CAPTMAX, LOCMIN, LOCMAX and DERIV0, standard capture functions (CAPT) must be assigned to the lower CCx channels when used. See the example below.

Example: CC[0] = CAPT, CC[1] = CAPT, CC[2] = CAPTMIN, CC[3] = CAPTMAX.

MCx Behaviour:

In LOCMIN and LOCMAX operation, capture is performed on each capture event. The MCx interrupt flag is set only when the captured value is above or equal (for LOCMIN) or below or equal (for LOCMAX) to the previous captured value. So interrupt flag is set when a new relative local Minimum (for CAPTMIN) or Maximum (for CAPTMAX) value has been detected. DERIV0 is equivalent to an OR function of (LOCMIN, LOCMAX).

In CAPT operation, capture is performed on each capture event. The MCx interrupt flag is set on each new capture.

In CAPTMIN and CAPTMAX operation, capture is performed only when on capture event time, the counter value is lower (for CAPTMIN) or higher (for CAPMAX) than the last captured value. The MCx interrupt flag is set only when on capture event time, the counter value is higher or equal (for CAPTMIN) or lower or equal (for CAPTMAX) to the value captured on the previous event. So interrupt flag is set when a new absolute local Minimum (for CAPTMIN) or Maximum (for CAPTMAX) value has been detected.

Interrupt Generation

In CAPT mode, an interrupt is generated on each filtered Fault n and each dedicated CCx channel capture counter value. In other modes, an interrupt is only generated on an extreme captured value.

Figure 34-28. Capture Action “CAPTMAX”

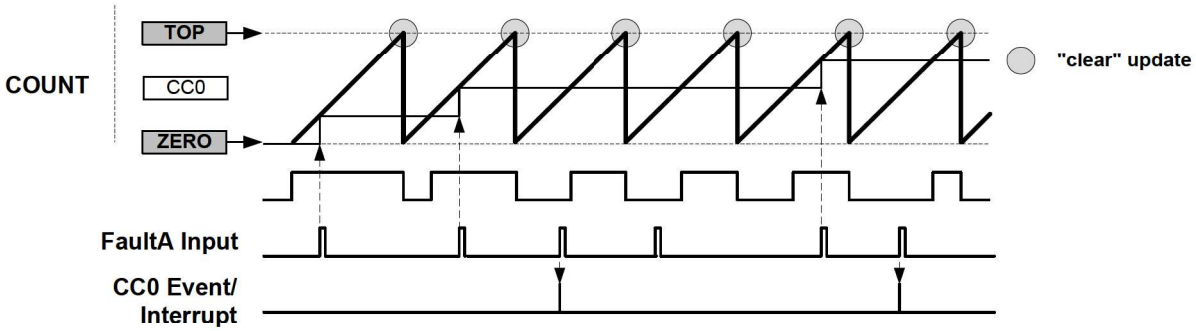

Figure 34-29. Capture Action “DERIV0”

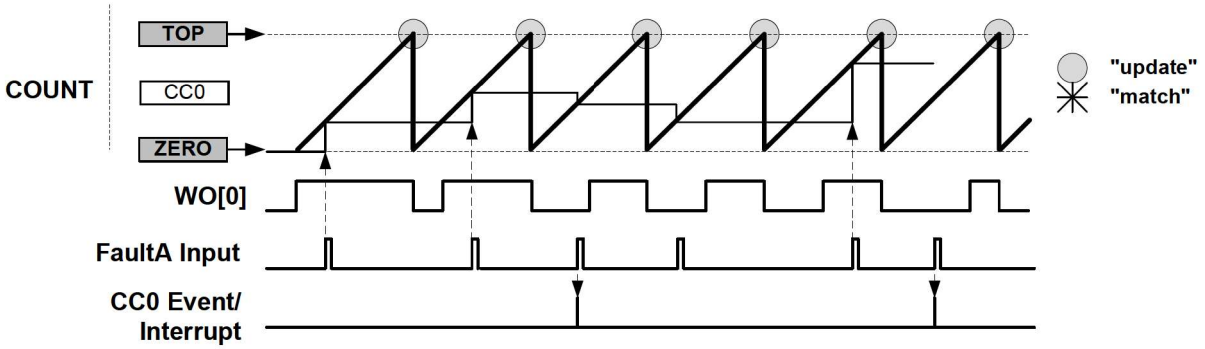

Hardware Halt Action

This is configured by writing 0x1 to the Fault n Halt mode bits in the Recoverable Fault n Configuration register (FCTRLn.HALT). When enabled, the timer/counter is halted and the cycle is extended as long as the corresponding fault is present.

The next figure ('Waveform Generation with Halt and Restart Actions') shows an example where both restart action and hardware halt action are enabled for Fault A. The compare channel 0 output is clamped to inactive level as long as the timer/counter is halted. The timer/counter resumes the counting operation as soon as the fault condition is no longer present. As the restart action is enabled in this example, the timer/counter is restarted after the fault condition is no longer present.

The figure after that ('Waveform Generation with Fault Qualification, Halt, and Restart Actions') shows a similar example, but with additionally enabled fault qualification. Here, counting is resumed after the fault condition is no longer present.

Note that in RAMP2 and RAMP2A operations, when a new timer/counter cycle starts, the cycle index will automatically change.

Figure 34-30. Waveform Generation with Halt and Restart Actions

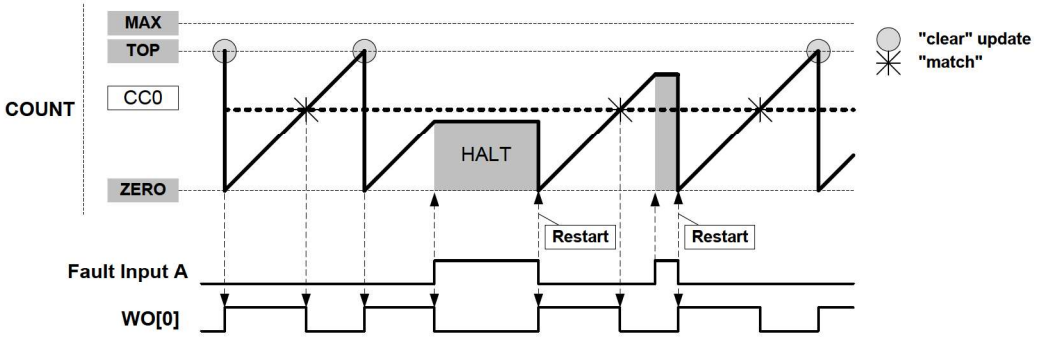

Figure 34-31. Waveform Generation with Fault Qualification, Halt, and Restart Actions

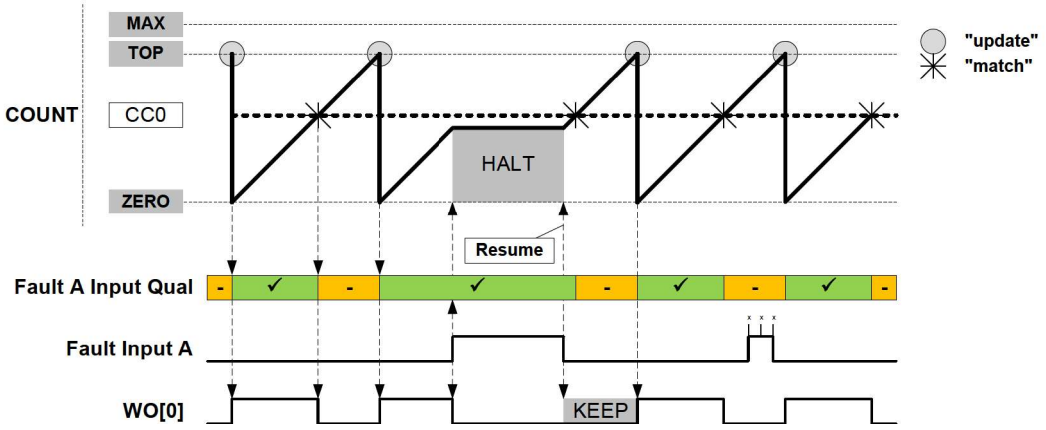

Software Halt Action This is configured by writing 0x2 to the Fault n Halt mode bits in the Recoverable Fault n configuration register (FCTRLn.HALT). Software halt action is similar to hardware halt action, but in order to restart the timer/counter, the corresponding fault condition must not be present anymore, and the corresponding FAULT n bit in the STATUS register must be cleared by software.

Figure 34-32. Waveform Generation with Software Halt, Fault Qualification, Keep and Restart Actions

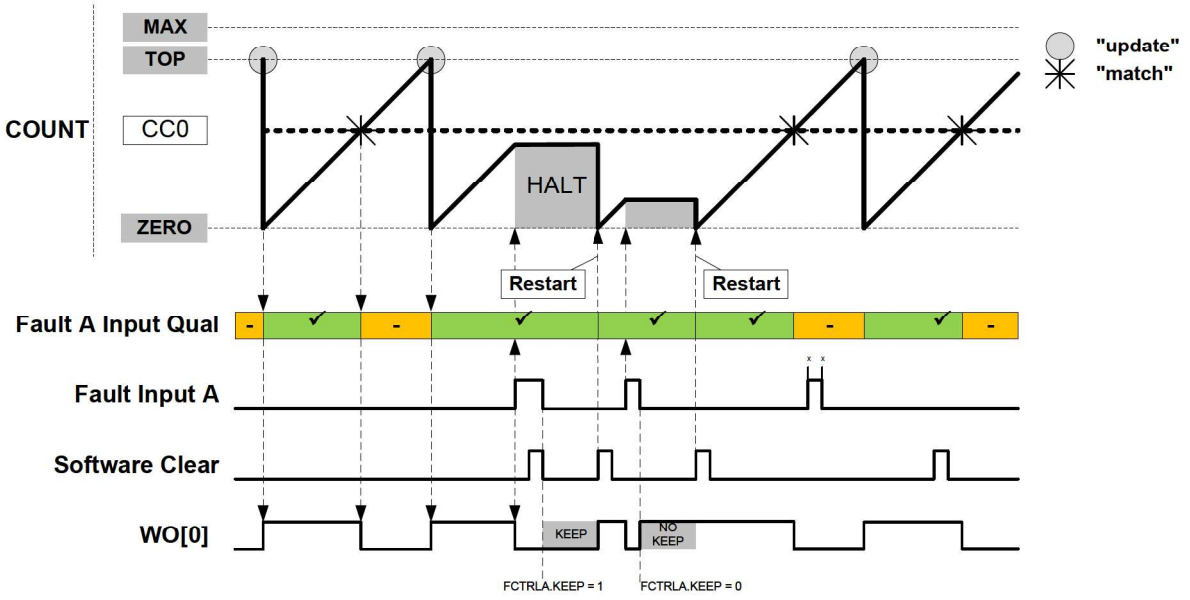

34.6.3.6 Non-Recoverable Faults

The non-recoverable fault action will force all the compare outputs to a pre-defined level programmed into the Driver Control register (DRVCTRL.NRE and DRVCTRL.NRV). The non-recoverable fault input (EV0 and EV1) actions are enabled in Event Control register (EVCTRL.EVACT0 and EVCTRL.EVACT1).

To avoid false fault detection on external events (e.g. a glitch on an I/O port) a digital filter can be enabled using Non-Recoverable Fault Input x Filter Value bits in the Driver Control register (DRVCTRL.FILTERVALn). Therefore, the event detection is synchronous, and event action is delayed by the selected digital filter value clock cycles.

When the Fault Detection on Debug Break Detection bit in Debug Control register (DGBCTRL.FDDBD) is written to '1', a non-recoverable Debug Faults State and an interrupt (DFS) is generated when the system goes in debug operation.

In RAMP2, RAMP2A, or DSBOTH operation, when the Lock Update bit in the Control B register is set by writing CTRLBSET.LUPD=1 and the ramp index or counter direction changes, a non-recoverable Update Fault State and the respective interrupt (UFS) are generated.

34.6.3.7 Waveform Extension

Figure 34-33 shows a schematic diagram of actions of the four optional units that follow the recoverable fault stage on a port pin pair: Output Matrix (OTMX), Dead-Time Insertion (DTI), SWAP and Pattern Generation. The DTI and SWAP units can be seen as a four port pair slices:

- Slice 0 DTI0 / SWAP0 acting on port pins (WO[0], WO[WO_NUM/2 +0])
- Slice 1 DTI1 / SWAP1 acting on port pins (WO[1], WO[WO_NUM/2 +1])

And more generally:

- Slice n DTIx / SWAPx acting on port pins (WO[x], WO[WO_NUM/2 +x])

Figure 34-33. Waveform Extension Stage Details

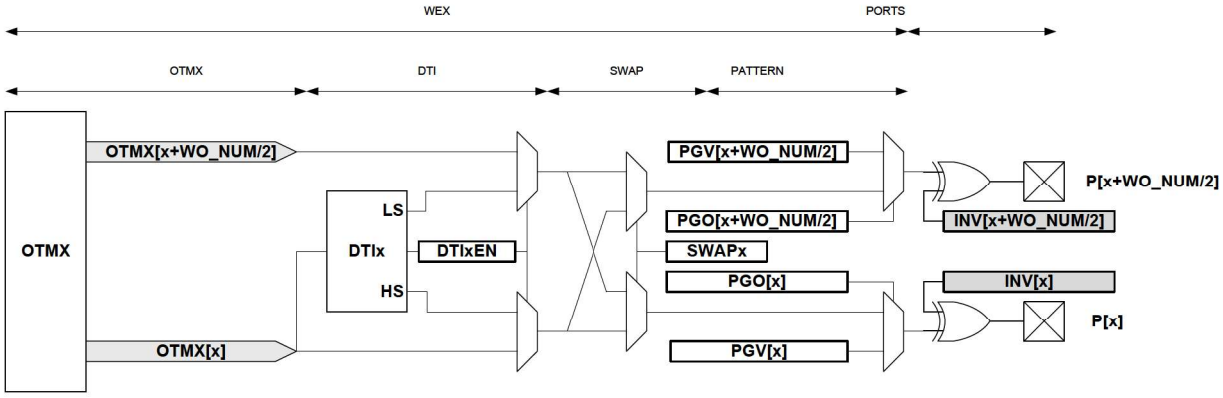

The output matrix (OTMX) unit distributes compare channels, according to the selectable configurations in the table below.

Table 34-5. Output Matrix Channel Pin Routing Configuration

Value	OTMX[x]							
0x0	CC3	CC2	CC1	CC0	CC3	CC2	CC1	CC0
0x1	CC1	CC0	CC1	CC0	CC1	CC0	CC1	CC0
0x2	CC0	CC0	CC0	CC0	CC0	CC0	CC0	CC0
0x3	CC1	CC1	CC1	CC1	CC1	CC1	CC1	CC0

The following comments provide an explanation for each of the four Output Matrix Chanel Pin Routing Configurations.

:

- Configuration 0x0 is the default configuration. The channel location is the default one, and channels are distributed on outputs modulo the number of channels. Channel 0 is routed to the Output matrix output OTMX[0], and Channel 1 to OTMX[1]. If there are more outputs than channels, then channel 0 is duplicated to the Output matrix output OTMX[CC_NUM], channel 1 to OTMX[CC_NUM+1] and so on.
- Configuration 0x1 distributes the channels on output modulo half the number of channels. This assigns twice the number of output locations to the lower channels than the default configuration. This can be used, for example, to control the four transistors of a full bridge using only two compare channels.
  Using pattern generation, some of these four outputs can be overwritten by a constant level, enabling flexible drive of a full bridge in all quadrant configurations.
- Configuration 0x2 distributes compare channel 0 (CC0) to all port pins. With pattern generation, this configuration can control a stepper motor.

- Configuration 0x3 distributes the compare channel CC0 to the first output, and the channel CC1 to all other outputs. Together with pattern generation and the fault extension, this configuration can control up to seven LED strings, with a boost stage.

Table 34-6. Example: four compare channels on four outputs

Value	OTMX[3]	OTMX[2]	OTMX[1]	OTMX[0]
0x0	CC3	CC2	CC1	CC0
0x1	CC1	CC0	CC1	CC0
0x2	CC0	CC0	CC0	CC0
0x3	CC1	CC1	CC1	CC0

The dead-time insertion (DTI) unit generates OFF time with the non-inverted low side (LS) and inverted high side (HS) of the wave generator output forced at low level. This OFF time is called dead time. Dead-time insertion ensures that the LS and HS will never switch simultaneously.

The DTI stage consists of four equal dead-time insertion generators; one for each of the first four compare channels. Figure 34-34 shows the block diagram of one DTI generator. The four channels have a common register which controls the dead time, which is independent of high side and low side setting.

Figure 34-34. Dead-Time Generator Block Diagram

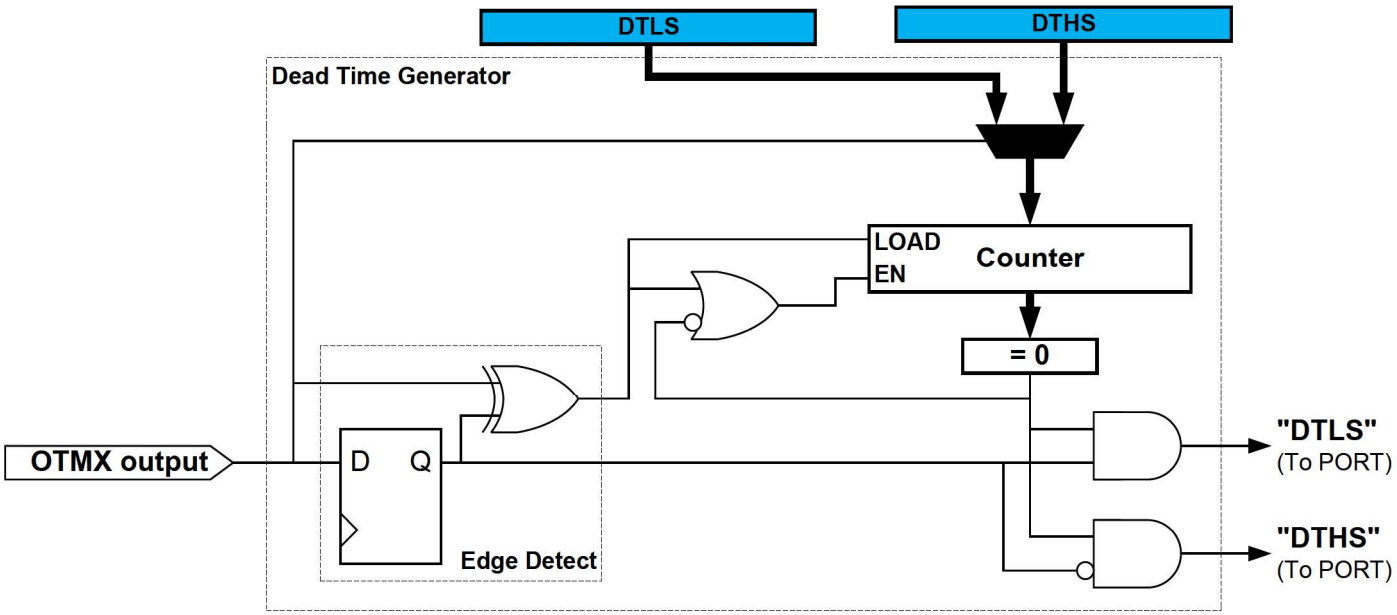

As shown in Figure 34-35, the 8-bit dead-time counter is decremented by one for each peripheral clock cycle until it reaches zero. A non-zero counter value will force both the low side and high side outputs into their OFF state. When the output matrix (OTMX) output changes, the dead-time counter is reloaded according to the edge of the input. When the output changes from low to high (positive edge) it initiates a counter reload of the DTLS register. When the output changes from high to low (negative edge) it reloads the DTHS register.

Figure 34-35. Dead-Time Generator Timing Diagram

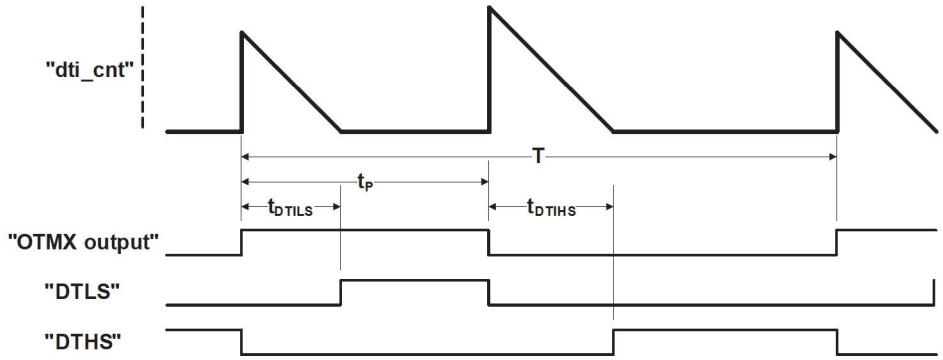

The pattern generator unit produces a synchronized bit pattern across the port pins it is connected to. The pattern generation features are primarily intended for handling the commutation sequence in brushless DC motors (BLDC), stepper motors, and full bridge control. See also Figure 34-36.

Figure 34-36. Pattern Generator Block Diagram

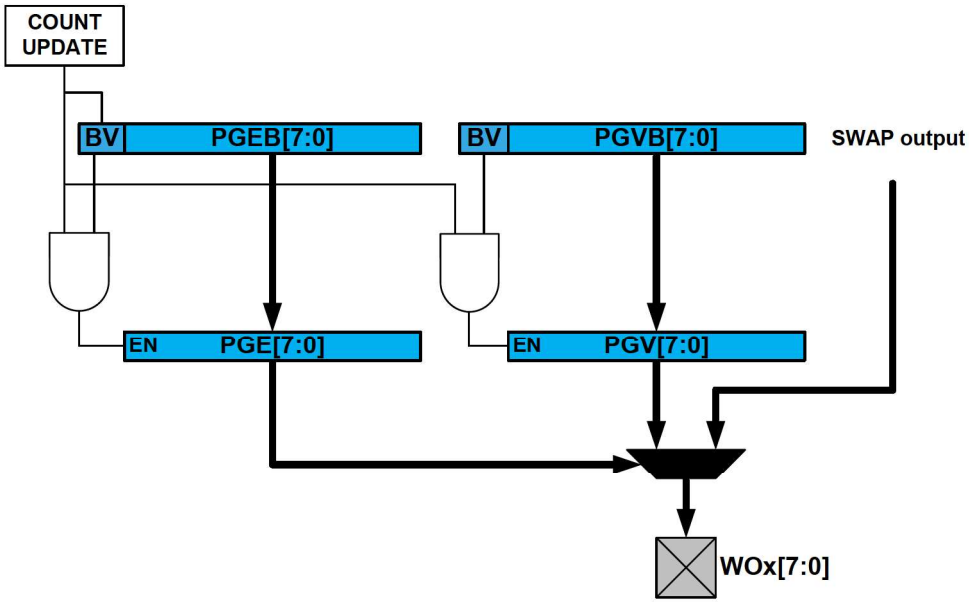

As with other double-buffered timer/counter registers, the register update is synchronized to the UPDATE condition set by the timer/counter waveform generation operation. If synchronization is not required by the application, the software can simply access directly the PATT.PGE, PATT.PGV bits registers.

34.6.4 Master/Slave Operation

Two TCC instances sharing the same GCLK_TCC clock, can be linked to provide more synchronized CC channels. The operation is enabled by setting the Master Synchronization bit in Control A register (CTRLA.MSYNC) in the Slave instance. When the bit is set, the slave TCC instance will synchronize the CC channels to the Master counter.

34.6.5 DMA, Interrupts, and Events

Table 34-7. Module Requests for TCC

Condition	Interrupt request	Event output	Event input	DMA request	DMA request is cleared
Overflow / Underflow	Yes	Yes		Yes(1)	On DMA acknowledge

.....continued					
Condition	**Interrupt request**	**Event output**	**Event input**	**DMA request**	**DMA request is cleared**
Channel Compare Match or Capture	Yes	Yes	Yes(2)	Yes(3)	For circular buffering: on DMA acknowledge For capture channel: when CCx register is read
Retrigger	Yes	Yes			
Count	Yes	Yes			
Capture Overflow Error	Yes				
Debug Fault State	Yes				
Recoverable Faults	Yes				
Non-Recoverable Faults	Yes				
TCCx Event 0 input			Yes(4)		
TCCx Event 1 input			Yes(5)		

Notes:
1. DMA request set on overflow, underflow or re-trigger conditions.
2. Can perform capture or generate recoverable fault on an event input.
3. In capture or circular modes.
4. On event input, either action can be executed:
   - Re-trigger counter
   - Control counter direction
   - Stop the counter
   - Decrement the counter
   - Perform period and pulse width capture
   - Generate non-recoverable fault
5. On event input, either action can be executed:
   - Re-trigger counter
   - Increment or decrement counter depending on direction
   - Start the counter
   - Increment or decrement counter based on direction
   - Increment counter regardless of direction
   - Generate non-recoverable fault

34.6.5.1 DMA Operation

The TCC can generate the following DMA requests:

Counter overflow (OVF) — If the Ones-shot Trigger mode in the control A register (CTRLA.DMAOS) is written to '0', the TCC generates a DMA request on each cycle when an update condition (overflow, underflow or re-trigger) is detected.
When an update condition (overflow, underflow or re-trigger) is detected while CTRLA.DMAOS=1, the TCC generates a DMA trigger on the cycle following the DMA One-Shot Command written to the Control B register (CTRLBSET.CMD=DMAOS).

In both cases, the request is cleared by hardware on DMA acknowledge.

Channel Match (MCx) — A DMA request is set only on a compare match if CTRLA.DMAOS=0. The request is cleared by hardware on DMA acknowledge.

When CTRLA.DMAOS=1, the DMA requests are not generated.

Channel Capture (MCx)	For a capture channel, the request is set when valid data is present in the CCx register, and cleared once the CCx register is read. In this operation mode, the CTRLA.DMAOS bit value is ignored.

DMA Operation with Circular Buffer

When circular buffer operation is enabled, the buffer registers must be written in a correct order and synchronized to the update times of the timer. The DMA triggers of the TCC provide a way to ensure a safe and correct update of circular buffers.

Note: Circular buffer are intended to be used with RAMP2, RAMP2A and DSBOTH operation only.

DMA Operation with Circular Buffer in RAMP2 and RAMP2A Mode

When a CCx channel is selected as a circular buffer, the related DMA request is not set on a compare match detection, but on start of ramp B.

If at least one circular buffer is enabled, the DMA overflow request is conditioned to the start of ramp A with an effective DMA transfer on previous ramp B (DMA acknowledge).

The update of all circular buffer values for ramp A can be done through a DMA channel triggered on a MC trigger. The update of all circular buffer values for ramp B, can be done through a second DMA channel triggered by the overflow DMA request.

Figure 34-37. DMA Triggers in RAMP and RAMP2 Operation Mode and Circular Buffer Enabled

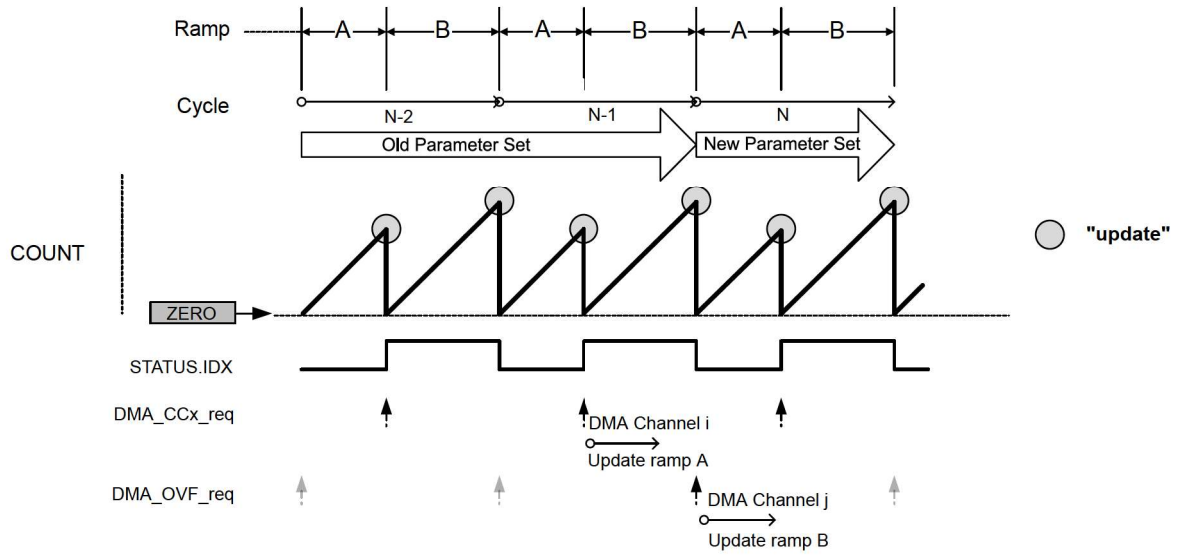

DMA Operation with Circular Buffer in DSBOTH Mode

When a CC channel is selected as a circular buffer, the related DMA request is not set on a compare match detection, but on start of down-counting phase.

If at least one circular buffer is enabled, the DMA overflow request is conditioned to the start of up-counting phase with an effective DMA transfer on previous down-counting phase (DMA acknowledge).

When up-counting, all circular buffer values can be updated through a DMA channel triggered by MC trigger. When down-counting, all circular buffer values can be updated through a second DMA channel, triggered by the OVF DMA request.

Figure 34-38. DMA Triggers in DSBOTH Operation Mode and Circular Buffer Enabled

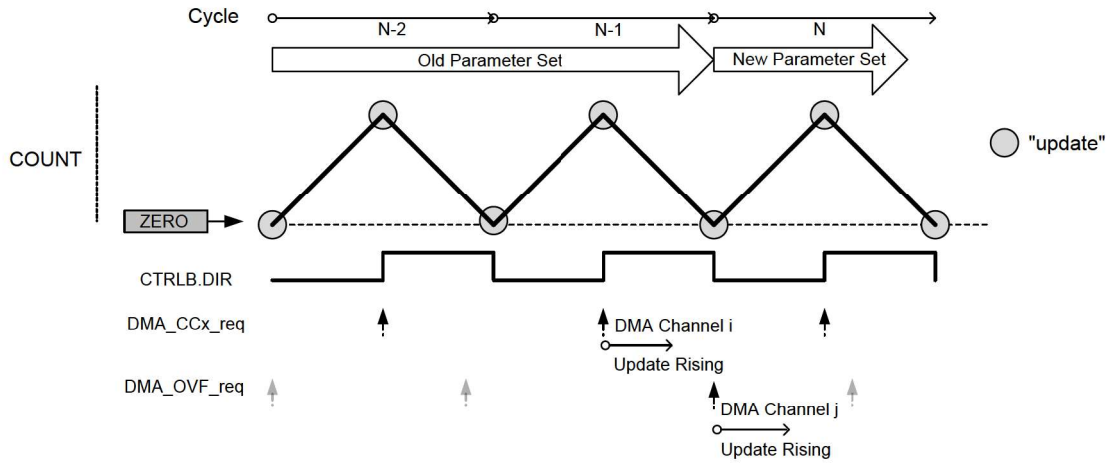

34.6.5.2 Interrupts

The TCC has the following interrupt sources:

- Overflow/Underflow (OVF)
- Retrigger (TRG)
- Count (CNT), also refer to the description of EVCTRL.CNTSEL.
- Capture Overflow Error (ERR)
- Non-Recoverable Update Fault (UFS)
- Debug Fault State (DFS)
- Recoverable Faults (FAULTn)
- Non-recoverable Faults (FAULTx)
- Compare Match or Capture Channels (MCx)

These interrupts are asynchronous wake-up sources. See Sleep Mode Entry and Exit Table in PM/Sleep Mode Controller section for details.

Each interrupt source has an interrupt flag associated with it. The interrupt flag in the Interrupt Flag Status and Clear (INTFLAG) register is set when the interrupt condition occurs. Each interrupt can be individually enabled by writing a '1' to the corresponding bit in the Interrupt Enable Set (INTENSET) register, and disabled by writing a '1' to the corresponding bit in the Interrupt Enable Clear (INTENCLR) register. An interrupt request is generated when the interrupt flag is set and the corresponding interrupt is enabled. The interrupt request remains active until the interrupt flag is cleared, the interrupt is disabled, or the TCC is reset. See 34.7.12 INTFLAG for details on how to clear interrupt flags. The TCC has one common interrupt request line for all the interrupt sources. The user must read the INTFLAG register to determine which interrupt condition is present.

Note: Interrupts must be globally enabled for interrupt requests to be generated. Refer to Nested Vector Interrupt Controller for more details.

34.6.5.3 Events

The TCC can generate the following output events:

- Overflow/Underflow (OVF)
- Trigger (TRG)
- Counter (CNT) For additional information, refer to EVCTRL.CNTSEL description.
- Compare Match or Capture on compare/capture channels: MCx

Writing a '1' ('0') to an Event Output bit in the Event Control Register (EVCTRL.xxEO) enables (disables) the corresponding output event. For further information, refer to the EVSYS – Event System.

The TCC can take the following actions on a channel input event (MCx):

- Capture event

- Generate a recoverable or non-recoverable fault

The TCC can take the following actions on counter Event 1 (TCCx EV1):

- Counter re-trigger
  - Not supported with dithering or if RAMP2 operation is used with a prescaler (CTRLA.PRESCALER !=0). RAMP2 operation can use the re-trigger option only if the counter re-trigger of the counter is synchronized with the next prescaler clock (CTRLA.PRESCYNC = PRESC).
  - If a re-trigger event occurs exactly at the time a Channel Compare Match occurs, the next waveform will be corrupted. To avoid this issue, use two channels to store two successive CC register values (n and n+1) and combine the related waveform outputs to provide signal redundancy.
- Counter direction control
- Stop the counter
- Decrement the counter on event
- Period and pulse width capture
- Non-recoverable fault

The TCC can take the following actions on counter Event 0 (TCCx EV0):

- Counter re-trigger
  - Not supported with dithering or if RAMP2 operation is used with a prescaler (CTRLA.PRESCALER !=0). RAMP2 operation can use the re-trigger option only if the counter re-trigger of the counter is synchronized with the next prescaler clock (CTRLA.PRESCYNC = PRESC).
  - If a re-trigger event occurs exactly at the time a Channel Compare Match occurs, the next waveform will be corrupted. To avoid this issue, use two channels to store two successive CC register values (n and n+1) and combine the related waveform outputs to provide signal redundancy.
- Count on event (increment or decrement, depending on counter direction)
- Counter start - Start counting on the event rising edge. Further events will not restart the counter; the counter will keep on counting using prescaled GCLK_TCCx, until it reaches TOP or ZERO, depending on the direction.
- Counter increment on event. This will increment the counter, irrespective of the counter direction.
- Count during active state of an asynchronous event (increment or decrement, depending on counter direction). In this case, the counter will be incremented or decremented on each cycle of the prescaled clock, as long as the event is active.
- Non-recoverable fault

The counter Event Actions are available in the Event Control registers (EVCTRL.EVACT0 and EVCTRL.EVACT1). For additional information, refer to EVCTRL.

Writing a '1' ('0') to an Event Input bit in the Event Control register (EVCTRL.MCEIx or EVCTRL.TCEIx) enables (disables) the corresponding action on input event. When TCC input events are used, the respective channel path of the Event System must be configured as Asynchronous path (CHANNELx.PATH = 0x2).

Note: When several events are connected to the TCC, the enabled action will apply for each of the incoming events. Refer to the EVSYS – Event System for details on how to configure the event system.

34.6.6 Sleep Mode Operation

The TCC can be configured to operate in any sleep mode. To be able to run in standby the RUNSTDBY bit in the Control A register (CTRLA.RUNSTDBY) must be '1'. The MODULE can in any sleep mode wake up the device using interrupts or perform actions through the Event System.

When the device is in Standby Sleep mode the DMA is not able to write the CTRLB, STATUS, COUNT, PATT, WAVE, PER, PERBUF, CC, CCBUF registers. To write these registers with the DMA the device must be in Active mode or Idle Sleep mode.

34.6.7 Debug Operation

When the CPU is halted in Debug mode, this peripheral will halt normal operation. This peripheral can be forced to continue operation during debugging. Refer to the Debug Control (DBGCTRL) register for details.

34.6.8 Synchronization

Some registers (or bit fields within a register) require synchronization when read and/or written. Synchronization is denoted by the "Read-Synchronized" (or Read-Synchronized Bits) and/or "Write-Synchronized" (or Write-Synchronized Bits) property in each individual register description. For more details, refer to Register Synchronization.

34.7 Register Summary

Offset	Name	Bit Pos.	7	6	5	4	3	2	1	0
0x00	CTRLA	7:0		RESOLUTION[1:0]					ENABLE	SWRST
		15:8	MSYNC		PRESCSYNC[1:0]		RUNSTDBY	PRESCALER[2:0]		
		23:16	DMAOS							
		31:24					CPTEN3	CPTEN2	CPTEN1	CPTEN0
0x04	CTRLBCLR	7:0	CMD[2:0]			IDXCMD[1:0]		ONESHOT	LUPD	DIR
0x05	CTRLBSET	7:0	CMD[2:0]			IDXCMD[1:0]		ONESHOT	LUPD	DIR
0x06 ... 0x07	Reserved									
0x08	SYNCBUSY	7:0	PER	WAVE	PATT	COUNT	STATUS	CTRLB	ENABLE	SWRST
		15:8					CC3	CC2	CC1	CC0
		23:16								
		31:24								
0x0C	FCTRLA	7:0	RESTART	BLANK[1:0]		QUAL	KEEP		SRC[1:0]	
		15:8	BLANKPRESC	CAPTURE[2:0]			CHSEL[1:0]		HALT[1:0]	
		23:16	BLANKVAL[7:0]							
		31:24					FILTERVAL[3:0]			
0x10	FCTRLB	7:0	RESTART	BLANK[1:0]		QUAL	KEEP		SRC[1:0]	
		15:8	BLANKPRESC	CAPTURE[2:0]			CHSEL[1:0]		HALT[1:0]	
		23:16	BLANKVAL[7:0]							
		31:24					FILTERVAL[3:0]			
0x14	WEXCTRL	7:0							OTMX[1:0]	
		15:8					DTIEN3	DTIEN2	DTIEN1	DTIEN0
		23:16	DTLS[7:0]							
		31:24	DTHS[7:0]							
0x18	DRVCTRL	7:0	NRE7	NRE6	NRE5	NRE4	NRE3	NRE2	NRE1	NRE0
		15:8	NRV7	NRV6	NRV5	NRV4	NRV3	NRV2	NRV1	NRV0
		23:16	INVEN7	INVEN6	INVEN5	INVEN4	INVEN3	INVEN2	INVEN1	INVEN0
		31:24	FILTERVAL1[3:0]				FILTERVAL0[3:0]			
0x1C ... 0x1D	Reserved									
0x1E	DBGCTRL	7:0						FDDBD		DBGRUN
0x1F	Reserved									
0x20	EVCTRL	7:0	CNTSEL[1:0]		EVACT1[2:0]			EVACT0[2:0]		
		15:8	TCEI1	TCEI0	TCINV1	TCINV0		CNTEO	TRGEO	OVFEO
		23:16					MCEI3	MCEI2	MCEI1	MCEI0
		31:24					MCEO3	MCEO2	MCEO1	MCEO0
0x24	INTENCLR	7:0					ERR	CNT	TRG	OVF
		15:8	FAULT1	FAULT0	FAULTB	FAULTA	DFS	UFS		
		23:16					MC3	MC2	MC1	MC0
		31:24								
0x28	INTENSET	7:0					ERR	CNT	TRG	OVF
		15:8	FAULT1	FAULT0	FAULTB	FAULTA	DFS	UFS		
		23:16					MC3	MC2	MC1	MC0
		31:24								
0x2C	INTFLAG	7:0					ERR	CNT	TRG	OVF
		15:8	FAULT1	FAULT0	FAULTB	FAULTA	DFS	UFS		
		23:16					MC3	MC2	MC1	MC0
		31:24								
0x30	STATUS	7:0	PERBUFV		PATTBUFV	SLAVE	DFS	UFS	IDX	STOP
		15:8	FAULT1	FAULT0	FAULTB	FAULTA	FAULT1IN	FAULT0IN	FAULTBIN	FAULTAIN
		23:16					CCBUFV3	CCBUFV2	CCBUFV1	CCBUFV0
		31:24					CMP3	CMP2	CMP1	CMP0

.....continued

Offset	Name	Bit Pos.	7	6	5	4	3	2	1	0
0x34	COUNT	7:0	COUNT[7:0]							
		15:8	COUNT[15:8]							
		23:16	COUNT[23:16]							
		31:24								
0x38	PATT	7:0	PGE7	PGE6	PGE5	PGE4	PGE3	PGE2	PGE1	PGE0
		15:8	PGV7	PGV6	PGV5	PGV4	PGV3	PGV2	PGV1	PGV0
0x3A ... 0x3B	Reserved									
0x3C	WAVE	7:0	CIPEREN		RAMP[1:0]			WAVEGEN[2:0]		
		15:8					CICCEN3	CICCEN2	CICCEN1	CICCEN0
		23:16					POL3	POL2	POL1	POL0
		31:24					SWAP3	SWAP2	SWAP1	SWAP0
0x40	PER	7:0	PER[1:0]		DITHER[5:0]					
		15:8	PER[9:2]							
		23:16	PER[17:10]							
		31:24								
0x44	CC0	7:0	CC[1:0]		DITHER[5:0]					
		15:8	CC[9:2]							
		23:16	CC[17:10]							
		31:24								
0x48	CC1	7:0	CC[1:0]		DITHER[5:0]					
		15:8	CC[9:2]							
		23:16	CC[17:10]							
		31:24								
0x4C	CC2	7:0	CC[1:0]		DITHER[5:0]					
		15:8	CC[9:2]							
		23:16	CC[17:10]							
		31:24								
0x50	CC3	7:0	CC[1:0]		DITHER[5:0]					
		15:8	CC[9:2]							
		23:16	CC[17:10]							
		31:24								
0x54 ... 0x63	Reserved									
0x64	PATTBUF	7:0	PGEB7	PGEB6	PGEB5	PGEB4	PGEB3	PGEB2	PGEB1	PGEB0
		15:8	PGVB7	PGVB6	PGVB5	PGVB4	PGVB3	PGVB2	PGVB1	PGVB0
0x66 ... 0x6B	Reserved									
0x6C	PERBUF	7:0	PERBUF[1:0]		DITHERBUF[5:0]					
		15:8	PERBUF[9:2]							
		23:16	PERBUF[17:10]							
		31:24								
0x70	CCBUF0	7:0	CCBUF[1:0]		DITHERBUF[5:0]					
		15:8	CCBUF[9:2]							
		23:16	CCBUF[17:10]							
		31:24								
0x74	CCBUF1	7:0	CCBUF[1:0]		DITHERBUF[5:0]					
		15:8	CCBUF[9:2]							
		23:16	CCBUF[17:10]							
		31:24								
0x78	CCBUF2	7:0	CCBUF[1:0]		DITHERBUF[5:0]					
		15:8	CCBUF[9:2]							
		23:16	CCBUF[17:10]							
		31:24								

.....continued

Offset	Name	Bit Pos.	7	6	5	4	3	2	1	0
0x7C	CCBUF3	7:0	CCBUF[1:0]		DITHERBUF[5:0]					
		15:8	CCBUF[9:2]							
		23:16	CCBUF[17:10]							
		31:24								

34.7.1 Control A

Name: CTRLA
Offset: 0x00
Reset: 0x00000000
Property: PAC Write-Protection, Enable-Protected, Write-Synchronized (ENABLE, SWRST)

Bit	31	30	29	28	27	26	25	24
					CPTEN3	CPTEN2	CPTEN1	CPTEN0
Access					R/W	R/W	R/W	R/W
Reset					0	0	0	0

Bit	23	22	21	20	19	18	17	16
	DMAOS							
Access	R/W							
Reset	0							

Bit	15	14	13	12	11	10	9	8
	MSYNC		PRESCSYNC[1:0]		RUNSTDBY	PRESCALER[2:0]		
Access	R/W		R/W	R/W	R/W	R/W	R/W	R/W
Reset	0		0	0	0	0	0	0

Bit	7	6	5	4	3	2	1	0
		RESOLUTION[1:0]					ENABLE	SWRST
Access		R/W	R/W				R/W	R/W
Reset		0	0				0	0

Bits 24, 25, 26, 27 – CPTENx Capture Channel x Enable
These bits are used to select the capture or compare operation on channel x.
Writing a '1' to CPTENx enables capture on channel x.
Writing a '0' to CPTENx disables capture on channel x.

Bit 23 – DMAOS DMA One-Shot Trigger Mode
This bit enables the DMA One-shot Trigger Mode.
Writing a '1' to this bit will generate a DMA trigger on TCC cycle following a TCC_CTRLBSET_CMD_DMAOS command.
Writing a '0' to this bit will generate DMA triggers on each TCC cycle.
This bit is not synchronized.

Bit 15 – MSYNC Master Synchronization (only for TCC slave instance)
This bit must be set if the TCC counting operation must be synchronized on its Master TCC.
This bit is not synchronized.

Value	Description
0	The TCC controls its own counter.
1	The counter is controlled by its Master TCC.

Bits 13:12 – PRESCSYNC[1:0] Prescaler and Counter Synchronization
These bits select if on re-trigger event, the Counter is cleared or reloaded on either the next GCLK_TCCx clock, or on the next prescaled GCLK_TCCx clock. It is also possible to reset the prescaler on re-trigger event.
These bits are not synchronized.

Value	Name	Description	
		Counter Reloaded	Prescaler
0x0	GCLK	Reload or reset Counter on next GCLK	-

.....continued			
Value	**Name**	**Description**	
		Counter Reloaded	**Prescaler**
0x1	PRESC	Reload or reset Counter on next prescaler clock	-
0x2	RESYNC	Reload or reset Counter on next GCLK	Reset prescaler counter
0x3	Reserved		

Bit 11 – RUNSTDBY Run in Standby
This bit is used to keep the TCC running in standby mode.
This bit is not synchronized.

Value	Description
0	The TCC is halted in standby.
1	The TCC continues to run in standby.

Bits 10:8 – PRESCALER[2:0] Prescaler
These bits select the Counter prescaler factor.
These bits are not synchronized.

Value	Name	Description
0x0	DIV1	Prescaler: GCLK_TCC
0x1	DIV2	Prescaler: GCLK_TCC/2
0x2	DIV4	Prescaler: GCLK_TCC/4
0x3	DIV8	Prescaler: GCLK_TCC/8
0x4	DIV16	Prescaler: GCLK_TCC/16
0x5	DIV64	Prescaler: GCLK_TCC/64
0x6	DIV256	Prescaler: GCLK_TCC/256
0x7	DIV1024	Prescaler: GCLK_TCC/1024

Bits 6:5 – RESOLUTION[1:0] Dithering Resolution
These bits increase the TCC resolution by enabling the dithering options.
These bits are not synchronized.

Table 34-8. Dithering

Value	Name	Description
0x0	NONE	The dithering is disabled.
0x1	DITH4	Dithering is done every 16 PWM frames. PER[3:0] and CCx[3:0] contain dithering pattern selection.
0x2	DITH5	Dithering is done every 32 PWM frames. PER[4:0] and CCx[4:0] contain dithering pattern selection.
0x3	DITH6	Dithering is done every 64 PWM frames. PER[5:0] and CCx[5:0] contain dithering pattern selection.

Bit 1 – ENABLE Enable
Due to synchronization there is delay from writing CTRLA.ENABLE until the peripheral is enabled/disabled. The value written to CTRLA.ENABLE will read back immediately and the ENABLE bit in the SYNCBUSY register (SYNCBUSY.ENABLE) will be set. SYNCBUSY.ENABLE will be cleared when the operation is complete.

Value	Description
0	The peripheral is disabled.
1	The peripheral is enabled.

Bit 0 – SWRST Software Reset
Writing a '0' to this bit has no effect.
Writing a '1' to this bit resets all registers in the TCC (except DBGCTRL) to their initial state, and the TCC will be disabled.
Writing a '1' to CTRLA.SWRST will always take precedence; all other writes in the same write-operation will be discarded.
Due to synchronization there is a delay from writing CTRLA.SWRST until the reset is complete. CTRLA.SWRST and SYNCBUSY.SWRST will both be cleared when the reset is complete.

Value	Description
0	There is no reset operation ongoing.
1	The reset operation is ongoing.

34.7.2 Control B Clear

Name: CTRLBCLR
Offset: 0x04
Reset: 0x00
Property: PAC Write-Protection, Write-Synchronized, Read-Synchronized

This register allows the user to change this register without doing a read-modify-write operation. Changes in this register will also be reflected in the Control B Set (CTRLBSET) register.

Bit	7	6	5	4	3	2	1	0
	CMD[2:0]			IDXCMD[1:0]		ONESHOT	LUPD	DIR
Access	R/W	R/W	R/W	R/W	R/W	R/W	R/W	R/W
Reset	0	0	0	0	0	0	0	0

Bits 7:5 – CMD[2:0] TCC Command
These bits can be used for software control of re-triggering and stop commands of the TCC. When a command has been executed, the CMD bit field will read back zero. The commands are executed on the next prescaled GCLK_TCC clock cycle.
Writing zero to this bit group has no effect.
Writing a value different from 0x0 to this bit field bits will clear the pending command.

Bits 4:3 – IDXCMD[1:0] Ramp Index Command
These bits can be used to force cycle A and cycle B changes in RAMP2 and RAMP2A operation. On timer/counter update condition, the command is executed, the IDX flag in STATUS register is updated and the IDXCMD command is cleared.
Writing zero to these bits has no effect.
Writing a value different from 0x0 to this bit field bits will clear the pending command.

Value	Name	Description
0x0	DISABLE	DISABLE Command disabled: IDX toggles between cycles A and B
0x1	SET	Set IDX: cycle B will be forced in the next cycle
0x2	CLEAR	Clear IDX: cycle A will be forced in next cycle
0x3	HOLD	Hold IDX: the next cycle will be the same as the current cycle.

BIt 2 – ONESHOT One-Shot
This bit controls one-shot operation of the TCC. When one-shot operation is enabled, the TCC will stop counting on the next overflow/underflow condition or on a stop command.
Writing a '0' to this bit has no effect
Writing a '1' to this bit will disable the one-shot operation.

Value	Description
0	The TCC will update the counter value on overflow/underflow condition and continue operation.
1	The TCC will stop counting on the next underflow/overflow condition.

Bit 1 – LUPD Lock Update
This bit controls the update operation of the TCC buffered registers.
When CTRLB.LUPD is cleared, the hardware UPDATE registers with value from their buffered registers is enabled.
This bit has no effect when input capture operation is enabled.
Writing a '0' to this bit has no effect.
Writing a '1' to this bit will enable the registers updates on hardware UPDATE condition.

Value	Description
0	The CCBx, PERB, PGVB, PGOB, and SWAPBx buffer registers values *are* copied into the corresponding CCx, PER, PGV, PGO and SWAPx registers on hardware update condition.
1	The CCBx, PERB, PGVB, PGOB, and SWAPBx buffer registers values are *not* copied into the corresponding CCx, PER, PGV, PGO and SWAPx registers on hardware update condition.

Bit 0 – DIR Counter Direction
This bit is used to change the direction of the counter.

Writing a '0' to this bit has no effect
Writing a '1' to this bit will clear the bit and make the counter count up.

Value	Description
0	The timer/counter is counting up (incrementing).
1	The timer/counter is counting down (decrementing).

34.7.3 Control B Set

Name: CTRLBSET
Offset: 0x05
Reset: 0x00
Property: PAC Write-Protection, Write-Synchronized, Read-Synchronized

This register allows the user to change this register without doing a read-modify-write operation. Changes in this register will also be reflected in the Control B Clear (CTRLBCLR) register.

Bit	7	6	5	4	3	2	1	0
	CMD[2:0]			IDXCMD[1:0]		ONESHOT	LUPD	DIR
Access	R/W	R/W	R/W	R/W	R/W	R/W	R/W	R/W
Reset	0	0	0	0	0	0	0	0

Bits 7:5 – CMD[2:0] TCC Command
These bits can be used for software control of re-triggering and stop commands of the TCC. When a command has been executed, the CMD bit field will be read back as zero. The commands are executed on the next prescaled GCLK_TCC clock cycle.
Writing zero to this bit group has no effect
Writing a value different from 0x0 to this bit field will issue a command for execution.



Important: This command requires synchronization before being executed. A valid sequence is:
- Issue CMD command (CTRLBSET.CMD = command)
- Wait for CMD synchronization (SYNCBUSY.CTRLB = 0)
- Wait for CMD read back as zero (CTRLBSET.CMD = 0)

Value	Name	Description
0x0	NONE	No action
0x1	RETRIGGER	Force start, restart or retrigger
0x2	STOP	Force stop
0x3	UPDATE	Force update of double buffered registers
0x4	READSYNC	Force a read synchronization of COUNT
0x5	DMAOS	One-shot DMA trigger

Bits 4:3 – IDXCMD[1:0] Ramp Index Command
These bits can be used to force cycle A and cycle B changes in RAMP2 and RAMP2A operation. On timer/counter update condition, the command is executed, the IDX flag in STATUS register is updated and the IDXCMD command is cleared.
Writing a zero to these bits has no effect.
Writing a valid value to these bits will set a command.

Value	Name	Description
0x0	DISABLE	Command disabled: IDX toggles between cycles A and B
0x1	SET	Set IDX: cycle B will be forced in the next cycle
0x2	CLEAR	Clear IDX: cycle A will be forced in next cycle
0x3	HOLD	Hold IDX: the next cycle will be the same as the current cycle.

Bit 2 – ONESHOT One-Shot
This bit controls one-shot operation of the TCC. When in one-shot operation, the TCC will stop counting on the next overflow/underflow condition or a stop command.
Writing a '0' to this bit has no effect.
Writing a '1' to this bit will enable the one-shot operation.

Value	Description
0	The TCC will count continuously.
1	The TCC will stop counting on the next underflow/overflow condition.

Bit 1 – LUPD Lock Update
This bit controls the update operation of the TCC buffered registers.
When CTRLB.LUPD is set, the hardware UPDATE registers with value from their buffered registers is disabled. Disabling the update ensures that all buffer registers are valid before a hardware update is performed. After all the buffer registers are loaded correctly, the buffered registers can be unlocked.
This bit has no effect when input capture operation is enabled.
Writing a '0' to this bit has no effect.
Writing a '1' to this bit will disable the registers updates on hardware UPDATE condition.

Value	Description
0	The CCBx, PERB, PGVB, PGOB, and SWAPBx buffer registers values *are* copied into the corresponding CCx, PER, PGV, PGO and SWAPx registers on hardware update condition.
1	The CCBx, PERB, PGVB, PGOB, and SWAPBx buffer registers values are *not* copied into CCx, PER, PGV, PGO and SWAPx registers on hardware update condition.

Bit 0 – DIR Counter Direction
This bit is used to change the direction of the counter.
Writing a '0' to this bit has no effect
Writing a '1' to this bit will clear the bit and make the counter count up.

Value	Description
0	The timer/counter is counting up (incrementing).
1	The timer/counter is counting down (decrementing).

34.7.4 Synchronization Busy

Name: SYNCBUSY
Offset: 0x08
Reset: 0x00000000
Property: -

Bit	31	30	29	28	27	26	25	24
Access								
Reset								

Bit	23	22	21	20	19	18	17	16
Access								
Reset								

Bit	15	14	13	12	11	10	9	8
					CC3	CC2	CC1	CC0
Access					R	R	R	R
Reset					0	0	0	0

Bit	7	6	5	4	3	2	1	0
	PER	WAVE	PATT	COUNT	STATUS	CTRLB	ENABLE	SWRST
Access	R	R	R	R	R	R	R	R
Reset	0	0	0	0	0	0	0	0

Bits 8, 9, 10, 11 – CC Compare/Capture Channel x Synchronization Busy
This bit is cleared when the synchronization of Compare/Capture Channel x register between the clock domains is complete.
This bit is set when the synchronization of Compare/Capture Channel x register between clock domains is started.
CCx bit is available only for existing Compare/Capture Channels. For details on CC channels number, refer to each TCC feature list.

Bit 7 – PER PER Synchronization Busy
This bit is cleared when the synchronization of PER register between the clock domains is complete.
This bit is set when the synchronization of PER register between clock domains is started.

Bit 6 – WAVE WAVE Synchronization Busy
This bit is cleared when the synchronization of WAVE register between the clock domains is complete.
This bit is set when the synchronization of WAVE register between clock domains is started.

Bit 5 – PATT PATT Synchronization Busy
This bit is cleared when the synchronization of PATTERN register between the clock domains is complete.
This bit is set when the synchronization of PATTERN register between clock domains is started.

Bit 4 – COUNT COUNT Synchronization Busy
This bit is cleared when the synchronization of COUNT register between the clock domains is complete.
This bit is set when the synchronization of COUNT register between clock domains is started.

Bit 3 – STATUS STATUS Synchronization Busy
This bit is cleared when the synchronization of STATUS register between the clock domains is complete.
This bit is set when the synchronization of STATUS register between clock domains is started.

Bit 2 – CTRLB CTRLB Synchronization Busy
This bit is cleared when the synchronization of CTRLBSET or CTRLBCLR register between the clock domains is complete.
This bit is set when the synchronization of CTRLBSET or CTRLBCLR register between clock domains is started.

Bit 1 – ENABLE ENABLE Synchronization Busy
This bit is cleared when the synchronization of ENABLE bit between the clock domains is complete.
This bit is set when the synchronization of ENABLE bit between clock domains is started.

Bit 0 – SWRST SWRST Synchronization Busy
This bit is cleared when the synchronization of SWRST bit between the clock domains is complete.
This bit is set when the synchronization of SWRST bit between clock domains is started.

34.7.5 Fault Control A and B

Name: FCTRLA, FCTRLB
Offset: 0x0C + n*0x04 [n=0..1]
Reset: 0x00000000
Property: PAC Write-Protection, Enable-Protected

Bit	31	30	29	28	27	26	25	24
					FILTERVAL[3:0]			
Access					R/W	R/W	R/W	R/W
Reset					0	0	0	0

Bit	23	22	21	20	19	18	17	16
	BLANKVAL[7:0]							
Access	R/W	R/W	R/W	R/W	R/W	R/W	R/W	R/W
Reset	0	0	0	0	0	0	0	0

Bit	15	14	13	12	11	10	9	8
	BLANKPRESC	CAPTURE[2:0]			CHSEL[1:0]		HALT[1:0]	
Access	R/W	R/W	R/W	R/W	R/W	R/W	R/W	R/W
Reset	0	0	0	0	0	0	0	0

Bit	7	6	5	4	3	2	1	0
	RESTART	BLANK[1:0]		QUAL	KEEP		SRC[1:0]	
Access	R/W	R/W	R/W	R/W	R/W		R/W	R/W
Reset	0	0	0	0	0		0	0

Bits 27:24 – FILTERVAL[3:0] Recoverable Fault n Filter Value
These bits define the filter value applied on MCEx (x=0,1) event input line. The value must be set to zero when MCEx event is used as synchronous event.

Bits 23:16 – BLANKVAL[7:0] Recoverable Fault n Blanking Value
These bits determine the duration of the blanking of the fault input source. Activation and edge selection of the blank filtering are done by the BLANK bits (FCTRLn.BLANK).
When enabled, the fault input source is internally disabled for BLANKVAL* prescaled GCLK_TCC periods after the detection of the waveform edge.

Bit 15 – BLANKPRESC Recoverable Fault n Blanking Value Prescaler
This bit enables a factor 64 prescaler factor on used as base frequency of the BLANKVAL value.

Value	Description
0	Blank time is BLANKVAL* prescaled GCLK_TCCx.
1	Blank time is BLANKVAL* 64 * prescaled GCLK_TCCx.

Bits 14:12 – CAPTURE[2:0] Recoverable Fault n Capture Action
These bits select the capture and Fault n interrupt/event conditions.
When using advanced capture functions like CAPTMIN, CAPTMAX, LOCMIN, LOCMAX and DERIV0, standard capture functions (CAPT) must be assigned to the lower CCx channels when used. See the example below.
Example: CC[0] = CAPT, CC[1] = CAPT, CC[2] = CAPTMIN, CC[3] = CAPTMAX.

Table 34-9. Fault n Capture Action

Value	Name	Description
0x0	DISABLE	Capture on valid recoverable Fault n is disabled
0x1	CAPT	On rising edge of a valid recoverable Fault n, capture counter value on channel selected by CHSEL[1:0]. INTFLAG.FAULTn flag rises on each new captured value.

.....continued		
Value	**Name**	**Description**
0x2	CAPTMIN	On rising edge of a valid recoverable Fault n, capture counter value on channel selected by CHSEL[1:0], if COUNT value is lower than the last stored capture value (CC). INTFLAG.FAULTn flag rises on each local minimum detection.
0x3	CAPTMAX	On rising edge of a valid recoverable Fault n, capture counter value on channel selected by CHSEL[1:0], if COUNT value is higher than the last stored capture value (CC). INTFLAG.FAULTn flag rises on each local maximun detection.
0x4	LOCMIN	On rising edge of a valid recoverable Fault n, capture counter value on channel selected by CHSEL[1:0]. INTFLAG.FAULTn flag rises on each local minimum value detection.
0x5	LOCMAX	On rising edge of a valid recoverable Fault n, capture counter value on channel selected by CHSEL[1:0]. INTFLAG.FAULTn flag rises on each local maximun detection.
0x6	DERIV0	On rising edge of a valid recoverable Fault n, capture counter value on channel selected by CHSEL[1:0]. INTFLAG.FAULTn flag rises on each local maximun or minimum detection.
0x7	CAPTMARK	Capture with ramp index as MSB value.

Bits 11:10 – CHSEL[1:0] Recoverable Fault n Capture Channel
These bits select the channel for capture operation triggered by recoverable Fault n.

Value	Name	Description
0x0	CC0	Capture value stored into CC0
0x1	CC1	Capture value stored into CC1
0x2	CC2	Capture value stored into CC2
0x3	CC3	Capture value stored into CC3

Bits 9:8 – HALT[1:0] Recoverable Fault n Halt Operation
These bits select the halt action for recoverable Fault n.

Value	Name	Description
0x0	DISABLE	Halt action disabled
0x1	HW	Hardware halt action
0x2	SW	Software halt action
0x3	NR	Non-recoverable fault

Bit 7 – RESTART Recoverable Fault n Restart
Setting this bit enables restart action for Fault n.

Value	Description
0	Fault n restart action is disabled.
1	Fault n restart action is enabled.

Bits 6:5 – BLANK[1:0] Recoverable Fault n Blanking Operation
These bits, select the blanking start point for recoverable Fault n.

Value	Name	Description
0x0	START	Blanking applied from start of the Ramp period
0x1	RISE	Blanking applied from rising edge of the waveform output
0x2	FALL	Blanking applied from falling edge of the waveform output
0x3	BOTH	Blanking applied from each toggle of the waveform output

Bit 4 – QUAL Recoverable Fault n Qualification
Setting this bit enables the recoverable Fault n input qualification.

Value	Description
0	The recoverable Fault n input is not disabled on CMPx value condition.
1	The recoverable Fault n input is disabled when output signal is at inactive level (CMPx == 0).

Bit 3 – KEEP Recoverable Fault n Keep
Setting this bit enables the Fault n keep action.

Value	Description
0	The Fault n state is released as soon as the recoverable Fault n is released.

Value	Description
1	The Fault n state is released at the end of TCC cycle.

Bits 1:0 – SRC[1:0] Recoverable Fault n Source
These bits select the TCC event input for recoverable Fault n.
Event system channel connected to MCEx event input, must be configured to route the event asynchronously, when used as a recoverable Fault n input.

Value	Name	Description
0x0	DISABLE	Fault input disabled
0x1	ENABLE	MCEx (x=0,1) event input
0x2	INVERT	Inverted MCEx (x=0,1) event input
0x3	ALTFAULT	Alternate fault (A or B) state at the end of the previous period.

34.7.6 Waveform Extension Control

Name: WEXCTRL
Offset: 0x14
Reset: 0x00000000
Property: PAC Write-Protection, Enable-Protected

Bit	31	30	29	28	27	26	25	24
	DTHS[7:0]							
Access	R/W	R/W	R/W	R/W	R/W	R/W	R/W	R/W
Reset	0	0	0	0	0	0	0	0

Bit	23	22	21	20	19	18	17	16
	DTLS[7:0]							
Access	R/W	R/W	R/W	R/W	R/W	R/W	R/W	R/W
Reset	0	0	0	0	0	0	0	0

Bit	15	14	13	12	11	10	9	8
					DTIEN3	DTIEN2	DTIEN1	DTIEN0
Access					R/W	R/W	R/W	R/W
Reset					0	0	0	0

Bit	7	6	5	4	3	2	1	0
							OTMX[1:0]	
Access							R/W	R/W
Reset							0	0

Bits 31:24 – DTHS[7:0] Dead-Time High Side Outputs Value
This register holds the number of GCLK_TCC clock cycles for the dead-time high side.

Bits 23:16 – DTLS[7:0] Dead-time Low Side Outputs Value
This register holds the number of GCLK_TCC clock cycles for the dead-time low side.

Bits 8, 9, 10, 11 – DTIEN Dead-time Insertion Generator x Enable
Setting any of these bits enables the dead-time insertion generator for the corresponding output matrix. This will override the output matrix [x] and [x+WO_NUM/2], with the low side and high side waveform respectively.

Value	Description
0	No dead-time insertion override.
1	Dead time insertion override on signal outputs[x] and [x+WO_NUM/2], from matrix outputs[x] signal.

Bits 1:0 – OTMX[1:0] Output Matrix
These bits define the matrix routing of the TCC waveform generation outputs to the port pins, according to Table 34-5.

34.7.7 Driver Control

Name: DRVCTRL
Offset: 0x18
Reset: 0x00000000
Property: PAC Write-Protection, Enable-Protected

Bit	31	30	29	28	27	26	25	24
	FILTERVAL1[3:0]				FILTERVAL0[3:0]			
Access	R/W	R/W	R/W	R/W	R/W	R/W	R/W	R/W
Reset	0	0	0	0	0	0	0	0

Bit	23	22	21	20	19	18	17	16
	INVEN7	INVEN6	INVEN5	INVEN4	INVEN3	INVEN2	INVEN1	INVEN0
Access	R/W	R/W	R/W	R/W	R/W	R/W	R/W	R/W
Reset	0	0	0	0	0	0	0	0

Bit	15	14	13	12	11	10	9	8
	NRV7	NRV6	NRV5	NRV4	NRV3	NRV2	NRV1	NRV0
Access	R/W	R/W	R/W	R/W	R/W	R/W	R/W	R/W
Reset	0	0	0	0	0	0	0	0

Bit	7	6	5	4	3	2	1	0
	NRE7	NRE6	NRE5	NRE4	NRE3	NRE2	NRE1	NRE0
Access	R/W	R/W	R/W	R/W	R/W	R/W	R/W	R/W
Reset	0	0	0	0	0	0	0	0

Bits 31:28 – FILTERVAL1[3:0] Non-Recoverable Fault Input 1 Filter Value
These bits define the filter value applied on TCE1 event input line. When the TCE1 event input line is configured as a synchronous event, this value must be 0x0.

Bits 27:24 – FILTERVAL0[3:0] Non-Recoverable Fault Input 0 Filter Value
These bits define the filter value applied on TCE0 event input line. When the TCE0 event input line is configured as a synchronous event, this value must be 0x0.

Bits 16, 17, 18, 19, 20, 21, 22, 23 – INVEN Waveform Output x Inversion
These bits are used to select inversion on the output of channel x.
Writing a '1' to INVENx inverts output from WO[x].
Writing a '0' to INVENx disables inversion of output from WO[x].

Bits 8, 9, 10, 11, 12, 13, 14, 15 – NRV NRVx Non-Recoverable State x Output Value
These bits define the value of the enabled override outputs, under non-recoverable fault condition.

Bits 0, 1, 2, 3, 4, 5, 6, 7 – NRE Non-Recoverable State x Output Enable
These bits enable the override of individual outputs by NRVx value, under non-recoverable fault condition.

Value	Description
0	Non-recoverable fault tri-state the output.
1	Non-recoverable faults set the output to NRVx level.

34.7.8 Debug control

Name: DBGCTRL
Offset: 0x1E
Reset: 0x00
Property: PAC Write-Protection

Bit	7	6	5	4	3	2	1	0
						FDDBD		DBGRUN
Access						R/W		R/W
Reset						0		0

Bit 2 – FDDBD Fault Detection on Debug Break Detection
This bit is not affected by software reset and should not be changed by software while the TCC is enabled.
By default this bit is zero, and the on-chip debug (OCD) fault protection is disabled. When this bit is written to '1', OCD break request from the OCD system will trigger non-recoverable fault. When this bit is set, OCD fault protection is enabled and OCD break request from the OCD system will trigger a non-recoverable fault.

Value	Description
0	No faults are generated when TCC is halted in debug mode.
1	A non recoverable fault is generated and FAULTD flag is set when TCC is halted in debug mode.

Bit 0 – DBGRUN Debug Running State
This bit is affected by system software reset and should not be changed by software while the TCC is enabled.

Value	Description
0	The TCC is halted when the device is halted in debug mode.
1	The TCC continues normal operation when the device is halted in debug mode.

34.7.9 Event Control

Name: EVCTRL
Offset: 0x20
Reset: 0x00000000
Property: PAC Write-Protection, Enable-Protected

Bit	31	30	29	28	27	26	25	24
					MCEO3	MCEO2	MCEO1	MCEO0
Access					R/W	R/W	R/W	R/W
Reset					0	0	0	0

Bit	23	22	21	20	19	18	17	16
					MCEI3	MCEI2	MCEI1	MCEI0
Access					R/W	R/W	R/W	R/W
Reset					0	0	0	0

Bit	15	14	13	12	11	10	9	8
	TCEI1	TCEI0	TCINV1	TCINV0		CNTEO	TRGEO	OVFEO
Access	R/W	R/W	R/W	R/W		R/W	R/W	R/W
Reset	0	0	0	0		0	0	0

Bit	7	6	5	4	3	2	1	0
	CNTSEL[1:0]		EVACT1[2:0]			EVACT0[2:0]		
Access	R/W	R/W	R/W	R/W	R/W	R/W	R/W	R/W
Reset	0	0	0	0	0	0	0	0

Bits 24, 25, 26, 27 – MCEO Match or Capture Channel x Event Output Enable
These bits control if the match/capture event on channel x is enabled and will be generated for every match or capture.

Value	Description
0	Match/capture x event is disabled and will not be generated.
1	Match/capture x event is enabled and will be generated for every compare/capture on channel x.

Bits 16, 17, 18, 19 – MCEI Match or Capture Channel x Event Input Enable
These bits indicate if the match/capture x incoming event is enabled
These bits are used to enable match or capture input events to the CCx channel of TCC.

Value	Description
0	Incoming events are disabled.
1	Incoming events are enabled.

Bits 14, 15 – TCEI Timer/Counter Event Input x Enable
This bit is used to enable input event x to the TCC.

Value	Description
0	Incoming event x is disabled.
1	Incoming event x is enabled.

Bits 12, 13 – TCINV Timer/Counter Event x Invert Enable
This bit inverts the event x input.

Value	Description
0	Input event source x is not inverted.
1	Input event source x is inverted.

Bit 10 – CNTEO Timer/Counter Event Output Enable
This bit is used to enable the counter cycle event. When enabled, an event will be generated on begin or end of counter cycle depending of CNTSEL[1:0] settings.

Value	Description
0	Counter cycle output event is disabled and will not be generated.
1	Counter cycle output event is enabled and will be generated depend of CNTSEL[1:0] value.

Bit 9 – TRGEO Retrigger Event Output Enable
This bit is used to enable the counter retrigger event. When enabled, an event will be generated when the counter retriggers operation.

Value	Description
0	Counter retrigger event is disabled and will not be generated.
1	Counter retrigger event is enabled and will be generated for every counter retrigger.

Bit 8 – OVFEO Overflow/Underflow Event Output Enable
This bit is used to enable the overflow/underflow event. When enabled an event will be generated when the counter reaches the TOP or the ZERO value.

Value	Description
0	Overflow/underflow counter event is disabled and will not be generated.
1	Overflow/underflow counter event is enabled and will be generated for every counter overflow/ underflow.

Bits 7:6 – CNTSEL[1:0] Timer/Counter Interrupt and Event Output Selection
These bits define on which part of the counter cycle the counter event output is generated.

Value	Name	Description
0x0	BEGIN	An interrupt/event is generated at begin of each counter cycle
0x1	END	An interrupt/event is generated at end of each counter cycle
0x2	BETWEEN	An interrupt/event is generated between each counter cycle.
0x3	BOUNDARY	An interrupt/event is generated at begin of first counter cycle, and end of last counter cycle.

Bits 5:3 – EVACT1[2:0] Timer/Counter Event Input 1 Action
These bits define the action the TCC will perform on TCEI1 event input.

Value	Name	Description
0x0	OFF	Event action disabled.
0x1	RETRIGGER	Start, restart or re-trigger TCC on event (do not use with dithering mode or RAMP2 operation)
0x2	DIR (asynch)	Direction control
0x3	STOP	Stop TCC on event
0x4	DEC	Decrement TCC on event
0x5	PPW	Period captured into CC0 Pulse Width on CC1
0x6	PWP	Period captured into CC1 Pulse Width on CC0
0x7	FAULT	Non-recoverable Fault

Bits 2:0 – EVACT0[2:0] Timer/Counter Event Input 0 Action
These bits define the action the TCC will perform on TCEI0 event input 0.

Value	Name	Description
0x0	OFF	Event action disabled.
0x1	RETRIGGER	Start, restart or re-trigger TCC on event (do not use with dithering mode or RAMP2 operation)
0x2	COUNTEV	Count on event. (not a valid selection for waveform generation)
0x3	START	Start TCC on event
0x4	INC	Increment TCC on EVENT
0x5	COUNT (async)	Count on active state of asynchronous event (not a valid selection for waveform generation)
0x6	-	Reserved
0x7	FAULT	Non-recoverable Fault

34.7.10 Interrupt Enable Clear

Name: INTENCLR
Offset: 0x24
Reset: 0x00000000
Property: PAC Write-Protection

This register allows the user to enable an interrupt without doing a read-modify-write operation. Changes in this register will also be reflected in the Interrupt Enable Set (INTENSET) register.

Bit	31	30	29	28	27	26	25	24
Access								
Reset								

Bit	23	22	21	20	19	18	17	16
					MC3	MC2	MC1	MC0
Access					R/W	R/W	R/W	R/W
Reset					0	0	0	0

Bit	15	14	13	12	11	10	9	8
	FAULT1	FAULT0	FAULTB	FAULTA	DFS	UFS		
Access	R/W	R/W	R/W	R/W	R/W	R/W		
Reset	0	0	0	0	0	0		

Bit	7	6	5	4	3	2	1	0
					ERR	CNT	TRG	OVF
Access					R/W	R/W	R/W	R/W
Reset					0	0	0	0

Bits 16, 17, 18, 19 – MC Match or Capture Channel x Interrupt Enable
Writing a '0' to this bit has no effect.
Writing a '1' to this bit will clear the corresponding Match or Capture Channel x Interrupt Disable/Enable bit, which disables the Match or Capture Channel x interrupt.

Value	Description
0	The Match or Capture Channel x interrupt is disabled.
1	The Match or Capture Channel x interrupt is enabled.

Bit 15 – FAULT1 Non-Recoverable Fault x Interrupt Enable
Writing a '0' to this bit has no effect.
Writing a '1' to this bit will clear the Non-Recoverable Fault x Interrupt Disable/Enable bit, which disables the Non-Recoverable Fault x interrupt.

Value	Description
0	The Non-Recoverable Fault x interrupt is disabled.
1	The Non-Recoverable Fault x interrupt is enabled.

Bit 14 – FAULT0 Non-Recoverable Fault x Interrupt Enable
Writing a '0' to this bit has no effect.
Writing a '1' to this bit will clear the Non-Recoverable Fault x Interrupt Disable/Enable bit, which disables the Non-Recoverable Fault x interrupt.

Value	Description
0	The Non-Recoverable Fault x interrupt is disabled.
1	The Non-Recoverable Fault x interrupt is enabled.

Bit 13 – FAULTB Recoverable Fault B Interrupt Enable
Writing a '0' to this bit has no effect.

Writing a '1' to this bit will clear the Recoverable Fault B Interrupt Disable/Enable bit, which disables the Recoverable Fault B interrupt.

Value	Description
0	The Recoverable Fault B interrupt is disabled.
1	The Recoverable Fault B interrupt is enabled.

Bit 12 – FAULTA Recoverable Fault A Interrupt Enable
Writing a '0' to this bit has no effect.
Writing a '1' to this bit will clear the Recoverable Fault A Interrupt Disable/Enable bit, which disables the Recoverable Fault A interrupt.

Value	Description
0	The Recoverable Fault A interrupt is disabled.
1	The Recoverable Fault A interrupt is enabled.

Bit 11 – DFS Non-Recoverable Debug Fault Interrupt Enable
Writing a '0' to this bit has no effect.
Writing a '1' to this bit will clear the Debug Fault State Interrupt Disable/Enable bit, which disables the Debug Fault State interrupt.

Value	Description
0	The Debug Fault State interrupt is disabled.
1	The Debug Fault State interrupt is enabled.

Bit 10 – UFS Non-Recoverable Update Fault Interrupt Enable
Writing a zero to this bit has no effect.
Writing a one to this bit will clear the Non-Recoverable Update Fault Interrupt Disable/Enable bit, which disables the Non-Recoverable Update Fault interrupt.
Note: This bit is only available on variant L devices. Refer to the *Configuration Summary* for more information.

Value	Description
0	The Non-Recoverable Update Fault interrupt is disabled.
1	The Non-Recoverable Update Fault interrupt is enabled.

Bit 3 – ERR Error Interrupt Enable
Writing a '0' to this bit has no effect.
Writing a '1' to this bit will clear the Error Interrupt Disable/Enable bit, which disables the Compare interrupt.

Value	Description
0	The Error interrupt is disabled.
1	The Error interrupt is enabled.

Bit 2 – CNT Counter Interrupt Enable
Writing a '0' to this bit has no effect.
Writing a '1' to this bit will clear the Counter Interrupt Disable/Enable bit, which disables the Counter interrupt.

Value	Description
0	The Counter interrupt is disabled.
1	The Counter interrupt is enabled.

Bit 1 – TRG Retrigger Interrupt Enable
Writing a '0' to this bit has no effect.
Writing a '1' to this bit will clear the Retrigger Interrupt Disable/Enable bit, which disables the Retrigger interrupt.

Value	Description
0	The Retrigger interrupt is disabled.
1	The Retrigger interrupt is enabled.

Bit 0 – OVF Overflow Interrupt Enable
Writing a '0' to this bit has no effect.
Writing a '1' to this bit will clear the Overflow Interrupt Disable/Enable bit, which disables the Overflow interrupt request.

Value	Description
0	The Overflow interrupt is disabled.
1	The Overflow interrupt is enabled.

34.7.11 Interrupt Enable Set

Name: INTENSET
Offset: 0x28
Reset: 0x00000000
Property: PAC Write-Protection

This register allows the user to enable an interrupt without doing a read-modify-write operation. Changes in this register will also be reflected in the Interrupt Enable Clear (INTENCLR) register.

Bit	31	30	29	28	27	26	25	24
Access								
Reset								

Bit	23	22	21	20	19	18	17	16
					MC3	MC2	MC1	MC0
Access					R/W	R/W	R/W	R/W
Reset					0	0	0	0

Bit	15	14	13	12	11	10	9	8
	FAULT1	FAULT0	FAULTB	FAULTA	DFS	UFS		
Access	R/W	R/W	R/W	R/W	R/W	R/W		
Reset	0	0	0	0	0	0		

Bit	7	6	5	4	3	2	1	0
					ERR	CNT	TRG	OVF
Access					R/W	R/W	R/W	R/W
Reset					0	0	0	0

Bits 16, 17, 18, 19 – MC Match or Capture Channel x Interrupt Enable
Writing a '0' to this bit has no effect.
Writing a '1' to this bit will set the corresponding Match or Capture Channel x Interrupt Disable/Enable bit, which enables the Match or Capture Channel x interrupt.

Value	Description
0	The Match or Capture Channel x interrupt is disabled.
1	The Match or Capture Channel x interrupt is enabled.

Bit 15 – FAULT1 Non-Recoverable Fault x Interrupt Enable
Writing a '0' to this bit has no effect.
Writing a '1' to this bit will set the Non-Recoverable Fault x Interrupt Disable/Enable bit, which enables the Non-Recoverable Fault x interrupt.

Value	Description
0	The Non-Recoverable Fault x interrupt is disabled.
1	The Non-Recoverable Fault x interrupt is enabled.

Bit 14 – FAULT0 Non-Recoverable Fault x Interrupt Enable
Writing a '0' to this bit has no effect.
Writing a '1' to this bit will clear the Non-Recoverable Fault x Interrupt Disable/Enable bit, which disables the Non-Recoverable Fault x interrupt.

Value	Description
0	The Non-Recoverable Fault x interrupt is disabled.
1	The Non-Recoverable Fault x interrupt is enabled.

Bit 13 – FAULTB Recoverable Fault B Interrupt Enable
Writing a '0' to this bit has no effect.

Writing a '1' to this bit will set the Recoverable Fault B Interrupt Disable/Enable bit, which enables the Recoverable Fault B interrupt.

Value	Description
0	The Recoverable Fault B interrupt is disabled.
1	The Recoverable Fault B interrupt is enabled.

Bit 12 – FAULTA Recoverable Fault A Interrupt Enable
Writing a '0' to this bit has no effect.
Writing a '1' to this bit will set the Recoverable Fault A Interrupt Disable/Enable bit, which enables the Recoverable Fault A interrupt.

Value	Description
0	The Recoverable Fault A interrupt is disabled.
1	The Recoverable Fault A interrupt is enabled.

Bit 11 – DFS Non-Recoverable Debug Fault Interrupt Enable
Writing a '0' to this bit has no effect.
Writing a '1' to this bit will set the Debug Fault State Interrupt Disable/Enable bit, which enables the Debug Fault State interrupt.

Value	Description
0	The Debug Fault State interrupt is disabled.
1	The Debug Fault State interrupt is enabled.

Bit 10 – UFS Non-Recoverable Update Fault Interrupt Enable
Writing a zero to this bit has no effect.
Writing a one to this bit will set the Non-Recoverable Update Fault Interrupt Disable/Enable bit, which enables the Non-Recoverable Update Fault interrupt.
Note: This bit is only available on variant L devices. Refer to the *Configuration Summary* for more information.

Value	Description
0	The Non-Recoverable Update Fault interrupt is disabled.
1	The Non-Recoverable Update Fault interrupt is enabled.

Bit 3 – ERR Error Interrupt Enable
Writing a '0' to this bit has no effect.
Writing a '1' to this bit will set the Error Interrupt Disable/Enable bit, which enables the Compare interrupt.

Value	Description
0	The Error interrupt is disabled.
1	The Error interrupt is enabled.

Bit 2 – CNT Counter Interrupt Enable
Writing a '0' to this bit has no effect.
Writing a '1' to this bit will set the Retrigger Interrupt Disable/Enable bit, which enables the Counter interrupt.

Value	Description
0	The Counter interrupt is disabled.
1	The Counter interrupt is enabled.

Bit 1 – TRG Retrigger Interrupt Enable
Writing a '0' to this bit has no effect.
Writing a '1' to this bit will set the Retrigger Interrupt Disable/Enable bit, which enables the Retrigger interrupt.

Value	Description
0	The Retrigger interrupt is disabled.
1	The Retrigger interrupt is enabled.

Bit 0 – OVF Overflow Interrupt Enable
Writing a '0' to this bit has no effect.
Writing a '1' to this bit will set the Overflow Interrupt Disable/Enable bit, which enables the Overflow interrupt request.

Value	Description
0	The Overflow interrupt is disabled.

Value	Description
1	The Overflow interrupt is enabled.

34.7.12 Interrupt Flag Status and Clear

Name: INTFLAG
Offset: 0x2C
Reset: 0x00000000
Property: -

Bit	31	30	29	28	27	26	25	24
Access								
Reset								

Bit	23	22	21	20	19	18	17	16
					MC3	MC2	MC1	MC0
Access					R/W	R/W	R/W	R/W
Reset					0	0	0	0

Bit	15	14	13	12	11	10	9	8
	FAULT1	FAULT0	FAULTB	FAULTA	DFS	UFS		
Access	R/W	R/W	R/W	R/W	R/W	R/W		
Reset	0	0	0	0	0	0		

Bit	7	6	5	4	3	2	1	0
					ERR	CNT	TRG	OVF
Access					R/W	R/W	R/W	R/W
Reset					0	0	0	0

Bits 16, 17, 18, 19 – MC Match or Capture Channel x Interrupt Flag
This flag is set on the next CLK_TCC_COUNT cycle after a match with the compare condition or once CCx register contain a valid capture value.
Writing a '0' to one of these bits has no effect.
Writing a '1' to one of these bits will clear the corresponding Match or Capture Channel x interrupt flag
In Capture operation, this flag is automatically cleared when CCx register is read.

Bit 15 – FAULT1 Non-Recoverable Fault x Interrupt Flag
This flag is set on the next CLK_TCC_COUNT cycle after a Non-Recoverable Fault x occurs.
Writing a '0' to this bit has no effect.
Writing a '1' to this bit clears the Non-Recoverable Fault x interrupt flag.

Bit 14 – FAULT0 Non-Recoverable Fault x Interrupt Enable
Writing a '0' to this bit has no effect.
Writing a '1' to this bit will clear the Non-Recoverable Fault x Interrupt Disable/Enable bit, which disables the Non-Recoverable Fault x interrupt.

Value	Description
0	The Non-Recoverable Fault x interrupt is disabled.
1	The Non-Recoverable Fault x interrupt is enabled.

Bit 13 – FAULTB Recoverable Fault B Interrupt Flag
This flag is set on the next CLK_TCC_COUNT cycle after a Recoverable Fault B occurs.
Writing a '0' to this bit has no effect.
Writing a '1' to this bit clears the Recoverable Fault B interrupt flag.

Bit 12 – FAULTA Recoverable Fault A Interrupt Flag
This flag is set on the next CLK_TCC_COUNT cycle after a Recoverable Fault B occurs.
Writing a '0' to this bit has no effect.
Writing a '1' to this bit clears the Recoverable Fault B interrupt flag.

Bit 11 – DFS Non-Recoverable Debug Fault State Interrupt Flag
This flag is set on the next CLK_TCC_COUNT cycle after an Debug Fault State occurs.
Writing a '0' to this bit has no effect.
Writing a '1' to this bit clears the Debug Fault State interrupt flag.

Bit 10 – UFS Non-Recoverable Update Fault
This flag is set when the RAMP index changes and the Lock Update bit is set (CTRLBSET.LUPD).
Writing a zero to this bit has no effect.
Writing a one to this bit clears the Non-Recoverable Update Fault interrupt flag.
Note: This bit is only available on variant L devices. Refer to the *Configuration Summary* for more information.

Bit 3 – ERR Error Interrupt Flag
This flag is set if a new capture occurs on a channel when the corresponding Match or Capture Channel x interrupt flag is one. In which case there is nowhere to store the new capture.
Writing a '0' to this bit has no effect.
Writing a '1' to this bit clears the error interrupt flag.

Bit 2 – CNT Counter Interrupt Flag
This flag is set on the next CLK_TCC_COUNT cycle after a counter event occurs.
Writing a '0' to this bit has no effect.
Writing a '1' to this bit clears the CNT interrupt flag.

Bit 1 – TRG Retrigger Interrupt Flag
This flag is set on the next CLK_TCC_COUNT cycle after a counter retrigger occurs.
Writing a '0' to this bit has no effect.
Writing a '1' to this bit clears the re-trigger interrupt flag.

Bit 0 – OVF Overflow Interrupt Flag
This flag is set on the next CLK_TCC_COUNT cycle after an overflow condition occurs.
Writing a '0' to this bit has no effect.
Writing a '1' to this bit clears the Overflow interrupt flag.

34.7.13 Status

Name: STATUS
Offset: 0x30
Reset: 0x00000001
Property: -

When writing the STATUS register ensure only 32-bit writes are made.

Bit	31	30	29	28	27	26	25	24
					CMP3	CMP2	CMP1	CMP0
Access					R/W	R/W	R/W	R/W
Reset					0	0	0	0

Bit	23	22	21	20	19	18	17	16
					CCBUFV3	CCBUFV2	CCBUFV1	CCBUFV0
Access					R/W	R/W	R/W	R/W
Reset					0	0	0	0

Bit	15	14	13	12	11	10	9	8
	FAULT1	FAULT0	FAULTB	FAULTA	FAULT1IN	FAULT0IN	FAULTBIN	FAULTAIN
Access	R/W	R/W	R/W	R/W	R	R	R	R
Reset	0	0	0	0	0	0	0	0

Bit	7	6	5	4	3	2	1	0
	PERBUFV		PATTBUFV	SLAVE	DFS	UFS	IDX	STOP
Access	R/W		R/W	R	R/W	R/W	R	R
Reset	0		0	0	0	0	0	1

Bits 24, 25, 26, 27 – CMP Channel x Compare Value
This bit reflects the channel x output compare value.

Value	Description
0	Channel compare output value is 0.
1	Channel compare output value is 1.

Bits 16, 17, 18, 19 – CCBUFV Channel x Compare or Capture Buffer Valid
For a compare channel, this bit is set when a new value is written to the corresponding CCBUFx register. The bit is cleared either by writing a '1' to the corresponding location when CTRLB.LUPD is set, or automatically on an UPDATE condition. If clearing this bit manually to force an update of the CCx register, it is necessary to clear the bit two times successively.
For a capture channel, the bit is set when a valid capture value is stored in the CCBUFx register. The bit is automatically cleared when the CCx register is read.

Bits 14, 15 – FAULT Non-recoverable Fault x State
This bit is set by hardware as soon as non-recoverable Fault x condition occurs.
This bit is cleared by writing a one to this bit and when the corresponding FAULTxIN status bit is low.
Once this bit is clear, the timer/counter will restart from the last COUNT value. To restart the timer/counter from BOTTOM, the timer/counter restart command must be executed before clearing the corresponding STATEx bit. For further details on timer/counter commands, refer to available commands description (34.7.3 CTRLBSET.CMD).

Bit 13 – FAULTB Recoverable Fault B State
This bit is set by hardware as soon as recoverable Fault B condition occurs.
This bit can be clear by hardware when Fault B action is resumed, or by writing a '1' to this bit when the corresponding FAULTBIN bit is low. If software halt command is enabled (FAULTB.HALT=SW), clearing this bit will release the timer/counter.

Bit 12 – FAULTA Recoverable Fault A State
This bit is set by hardware as soon as recoverable Fault A condition occurs.
This bit can be clear by hardware when Fault A action is resumed, or by writing a '1' to this bit when the corresponding FAULTAIN bit is low. If software halt command is enabled (FAULTA.HALT=SW), clearing this bit will release the timer/counter.

Bit 11 – FAULT1IN Non-Recoverable Fault 1 Input
This bit is set while an active Non-Recoverable Fault 1 input is present.

Bit 10 – FAULT0IN Non-Recoverable Fault 0 Input
This bit is set while an active Non-Recoverable Fault 0 input is present.

Bit 9 – FAULTBIN Recoverable Fault B Input
This bit is set while an active Recoverable Fault B input is present.

Bit 8 – FAULTAIN Recoverable Fault A Input
This bit is set while an active Recoverable Fault A input is present.

Bit 7 – PERBUFV Period Buffer Valid
This bit is set when a new value is written to the PERBUF register. This bit is automatically cleared by hardware on UPDATE condition when CTRLB.LUPD is set, or by writing a '1' to this bit. If clearing this bit manually to force an update of the PER register, it is necessary to clear the bit two times successively.

Bit 5 – PATTBUFV Pattern Generator Value Buffer Valid
This bit is set when a new value is written to the PATTBUF register. This bit is automatically cleared by hardware on UPDATE condition when CTRLB.LUPD is set, or by writing a '1' to this bit. If clearing this bit manually to force an update of the PATT register, it is necessary to clear the bit two times successively.

Bit 4 – SLAVE Slave
This bit is set when TCC is set in Slave mode. This bit follows the CTRLA.MSYNC bit state.

Bit 3 – DFS Debug Fault State
This bit is set by hardware in Debug mode when DDBGCTRL.FDDBD bit is set. The bit is cleared by writing a '1' to this bit and when the TCC is not in Debug mode.
When the bit is set, the counter is halted and the Waveforms state depend on DRVCTRL.NRE and DRVCTRL.NRV registers.

Bit 2 – UFS Non-recoverable Update Fault State
This bit is set by hardware when the RAMP index changes and the Lock Update bit is set (CTRLBSET.LUPD). The bit is cleared by writing a one to this bit.
When the bit is set, the waveforms state depend on DRVCTRL.NRE and DRVCTRL.NRV registers.

Bit 1 – IDX Ramp Index
In RAMP2 and RAMP2A operation, the bit is cleared during the cycle A and set during the cycle B. In RAMP1 operation, the bit always reads zero. For details on ramp operations, refer to 34.6.3.4 Ramp Operations.

Bit 0 – STOP Stop
This bit is set when the TCC is disabled either on a STOP command or on an UPDATE condition when One-Shot operation mode is enabled (CTRLBSET.ONESHOT=1).
This bit is clear on the next incoming counter increment or decrement.

Value	Description
0	Counter is running.
1	Counter is stopped.

34.7.14 Counter Value

Name: COUNT
Offset: 0x34
Reset: 0x00000000
Property: PAC Write-Protection, Write-Synchronized, Read-Synchronized

Note: Prior to any read access, this register must be synchronized by user by writing the according TCC Command value to the Control B Set register (CTRLBSET.CMD=READSYNC).

Bit	31	30	29	28	27	26	25	24
Access								
Reset								

Bit	23	22	21	20	19	18	17	16
	COUNT[23:16]							
Access	R/W	R/W	R/W	R/W	R/W	R/W	R/W	R/W
Reset	0	0	0	0	0	0	0	0

Bit	15	14	13	12	11	10	9	8
	COUNT[15:8]							
Access	R/W	R/W	R/W	R/W	R/W	R/W	R/W	R/W
Reset	0	0	0	0	0	0	0	0

Bit	7	6	5	4	3	2	1	0
	COUNT[7:0]							
Access	R/W	R/W	R/W	R/W	R/W	R/W	R/W	R/W
Reset	0	0	0	0	0	0	0	0

Bits 23:0 – COUNT[23:0] Counter Value
These bits hold the value of the counter register.
Note: When the TCC is configured as 16-bit timer/counter, the excess bits are read zero.

Note: This bit field occupies the MSB of the register, [23:m]. m is dependent on the Resolution bit in the Control A register (CTRLA.RESOLUTION):

CTRLA.RESOLUTION	Bits [23:m]
0x0 - NONE	23:0 (depicted)
0x1 - DITH4	23:4
0x2 - DITH5	23:5
0x3 - DITH6	23:6

34.7.15 Pattern

Name: PATT
Offset: 0x38
Reset: 0x0000
Property: Write-Synchronized

Bit	15	14	13	12	11	10	9	8
	PGV7	PGV6	PGV5	PGV4	PGV3	PGV2	PGV1	PGV0
Access	R/W	R/W	R/W	R/W	R/W	R/W	R/W	R/W
Reset	0	0	0	0	0	0	0	0

Bit	7	6	5	4	3	2	1	0
	PGE7	PGE6	PGE5	PGE4	PGE3	PGE2	PGE1	PGE0
Access	R/W	R/W	R/W	R/W	R/W	R/W	R/W	R/W
Reset	0	0	0	0	0	0	0	0

Bits 8, 9, 10, 11, 12, 13, 14, 15 – PGV Pattern Generation Output Value
This register holds the values of pattern for each waveform output.

Bits 0, 1, 2, 3, 4, 5, 6, 7 – PGE Pattern Generation Output Enable
This register holds the enable status of pattern generation for each waveform output. A bit written to '1' will override the corresponding SWAP output with the corresponding PGVn value.

34.7.16 Waveform

Name: WAVE
Offset: 0x3C
Reset: 0x00000000
Property: Write-Synchronized

Bit	31	30	29	28	27	26	25	24
					SWAP3	SWAP2	SWAP1	SWAP0
Access					R/W	R/W	R/W	R/W
Reset					0	0	0	0

Bit	23	22	21	20	19	18	17	16
					POL3	POL2	POL1	POL0
Access					R/W	R/W	R/W	R/W
Reset					0	0	0	0

Bit	15	14	13	12	11	10	9	8
					CICCEN3	CICCEN2	CICCEN1	CICCEN0
Access					R/W	R/W	R/W	R/W
Reset					0	0	0	0

Bit	7	6	5	4	3	2	1	0
	CIPEREN		RAMP[1:0]			WAVEGEN[2:0]		
Access	R/W		R/W	R/W		R/W	R/W	R/W
Reset	0		0	0		0	0	0

Bits 24, 25, 26, 27 – SWAP Swap DTI Output Pair x
Setting these bits enables output swap of DTI outputs [x] and [x+WO_NUM/2]. Note the DTIxEN settings will not affect the swap operation.

Bits 16, 17, 18, 19 – POL Channel Polarity x
Setting these bits enables the output polarity in single-slope and dual-slope PWM operations.

Value	Name	Description
0	(single-slope PWM waveform generation)	Compare output is initialized to ~DIR and set to DIR when TCC counter matches CCx value
1	(single-slope PWM waveform generation)	Compare output is initialized to DIR and set to ~DIR when TCC counter matches CCx value.
0	(dual-slope PWM waveform generation)	Compare output is set to ~DIR when TCC counter matches CCx value
1	(dual-slope PWM waveform generation)	Compare output is set to DIR when TCC counter matches CCx value.

Bits 8, 9, 10, 11 – CICCEN Circular CC Enable x
Setting this bits enables the compare circular buffer option on channel. When the bit is set, CCx register value is copied-back into the CCx register on UPDATE condition.

Bit 7 – CIPEREN Circular Period Enable
Setting this bits enable the period circular buffer option. When the bit is set, the PER register value is copied-back into the PERB register on UPDATE condition.

Bits 5:4 – RAMP[1:0] Ramp Operation
These bits select Ramp operation (RAMP). These bits are not synchronized.

Value	Name	Description
0x0	RAMP1	RAMP1 operation
0x1	RAMP2A	Alternative RAMP2 operation

Value	Name	Description
0x2	RAMP2	RAMP2 operation

Bits 2:0 – WAVEGEN[2:0] Waveform Generation Operation
These bits select the waveform generation operation. The settings impact the top value and control if frequency or PWM waveform generation should be used. These bits are not synchronized.

Value	Name	Description						
		Operation	Top	Update	Waveform Output On Match	Waveform Output On Update	OVFIF/Event Up	Down
0x0	NFRQ	Normal Frequency	PER	TOP/Zero	Toggle	Stable	TOP	Zero
0x1	MFRQ	Match Frequency	CC0	TOP/Zero	Toggle	Stable	TOP	Zero
0x2	NPWM	Normal PWM	PER	TOP/Zero	Set	Clear	TOP	Zero
0x3	Reserved	-	-	-	-	-	TOP	-
0x4	DSCRITICAL	Dual-slope PWM	PER	Zero	~DIR	Stable	–	Zero
0x5	DSBOTTOM	Dual-slope PWM	PER	Zero	~DIR	Stable	–	Zero
0x6	DSBOTH	Dual-slope PWM	PER	TOP & Zero	~DIR	Stable	TOP	Zero
0x7	DSTOP	Dual-slope PWM	PER	Zero	~DIR	Stable	TOP	–

34.7.17 Period Value

Name: PER
Offset: 0x40
Reset: 0xFFFFFFFF
Property: Write-Synchronized

Bit	31	30	29	28	27	26	25	24
Access								
Reset								

Bit	23	22	21	20	19	18	17	16
	PER[17:10]							
Access	R/W	R/W	R/W	R/W	R/W	R/W	R/W	R/W
Reset	1	1	1	1	1	1	1	1

Bit	15	14	13	12	11	10	9	8
	PER[9:2]							
Access	R/W	R/W	R/W	R/W	R/W	R/W	R/W	R/W
Reset	1	1	1	1	1	1	1	1

Bit	7	6	5	4	3	2	1	0
	PER[1:0]		DITHER[5:0]					
Access	R/W	R/W	R/W	R/W	R/W	R/W	R/W	R/W
Reset	1	1	1	1	1	1	1	1

Bits 23:6 – PER[17:0] Period Value
These bits hold the value of the period buffer register.
Note: When the TCC is configured as 16-bit timer/counter, the excess bits are read zero.

Note: This bit field occupies the MSB of the register, [23:m]. m is dependent on the Resolution bit in the Control A register (CTRLA.RESOLUTION):

CTRLA.RESOLUTION	Bits [23:m]
0x0 - NONE	23:0
0x1 - DITH4	23:4
0x2 - DITH5	23:5
0x3 - DITH6	23:6 (depicted)

Bits 5:0 – DITHER[5:0] Dithering Cycle Number
These bits hold the number of extra cycles that are added on the PWM pulse period every 64 PWM frames.
Note: This bit field consists of the n LSB of the register. n is dependent on the value of the Resolution bits in the Control A register (CTRLA.RESOLUTION):

CTRLA.RESOLUTION	Bits [n:0]
0x0 - NONE	-
0x1 - DITH4	3:0
0x2 - DITH5	4:0
0x3 - DITH6	5:0 (depicted)

34.7.18 Compare/Capture Channel x

Name: CC
Offset: 0x44 + n*0x04 [n=0..3]
Reset: 0x00000000
Property: Write-Synchronized, Read-Synchronized

The CCx register represents the 16-, 24- bit value, CCx. The register has two functions, depending of the mode of operation.

For capture operation, this register represents the second buffer level and access point for the CPU and DMA.

For compare operation, this register is continuously compared to the counter value. Normally, the output form the comparator is then used for generating waveforms.

CCx register is updated with the buffer value from their corresponding CCBUFx register when an UPDATE condition occurs.

In addition, in match frequency operation, the CC0 register controls the counter period.

Bit	31	30	29	28	27	26	25	24
Access								
Reset								

Bit	23	22	21	20	19	18	17	16
	CC[17:10]							
Access	R/W	R/W	R/W	R/W	R/W	R/W	R/W	R/W
Reset	0	0	0	0	0	0	0	0

Bit	15	14	13	12	11	10	9	8
	CC[9:2]							
Access	R/W	R/W	R/W	R/W	R/W	R/W	R/W	R/W
Reset	0	0	0	0	0	0	0	0

Bit	7	6	5	4	3	2	1	0
	CC[1:0]		DITHER[5:0]					
Access	R/W	R/W	R/W	R/W	R/W	R/W	R/W	R/W
Reset	0	0	0	0	0	0	0	0

Bits 23:6 – CC[17:0] Channel x Compare/Capture Value
These bits hold the value of the Channel x compare/capture register.
Note: When the TCC is configured as 16-bit timer/counter, the excess bits are read zero.

Note: This bit field occupies the m MSB of the register, [23:m]. m is dependent on the Resolution bit in the Control A register (CTRLA.RESOLUTION):

CTRLA.RESOLUTION	Bits [23:m]
0x0 - NONE	23:0
0x1 - DITH4	23:4
0x2 - DITH5	23:5
0x3 - DITH6	23:6 (depicted)

Bits 5:0 – DITHER[5:0] Dithering Cycle Number
These bits hold the number of extra cycles that are added on the PWM pulse width every 64 PWM frames.

Note: This bit field consists of the n LSB of the register. n is dependent on the value of the Resolution bits in the Control A register (CTRLA.RESOLUTION):

CTRLA.RESOLUTION	Bits [n:0]
0x0 - NONE	-
0x1 - DITH4	3:0
0x2 - DITH5	4:0
0x3 - DITH6	5:0 (depicted)

34.7.19 Pattern Buffer

Name: PATTBUF
Offset: 0x64
Reset: 0x0000
Property: Write-Synchronized, Read-Synchronized

Bit	15	14	13	12	11	10	9	8
	PGVB7	PGVB6	PGVB5	PGVB4	PGVB3	PGVB2	PGVB1	PGVB0
Access	R/W	R/W	R/W	R/W	R/W	R/W	R/W	R/W
Reset	0	0	0	0	0	0	0	0

Bit	7	6	5	4	3	2	1	0
	PGEB7	PGEB6	PGEB5	PGEB4	PGEB3	PGEB2	PGEB1	PGEB0
Access	R/W	R/W	R/W	R/W	R/W	R/W	R/W	R/W
Reset	0	0	0	0	0	0	0	0

Bits 8, 9, 10, 11, 12, 13, 14, 15 – PGVB Pattern Generation Output Value Buffer
This register is the buffer for the PGV register. If double buffering is used, valid content in this register is copied to the PGV register on an UPDATE condition.

Bits 0, 1, 2, 3, 4, 5, 6, 7 – PGEB Pattern Generation Output Enable Buffer
This register is the buffer of the PGE register. If double buffering is used, valid content in this register is copied into the PGE register at an UPDATE condition.

34.7.20 Period Buffer Value

Name: PERBUF
Offset: 0x6C
Reset: 0xFFFFFFFF
Property: Write-Synchronized, Read-Synchronized

Bit	31	30	29	28	27	26	25	24
Access								
Reset								

Bit	23	22	21	20	19	18	17	16
	PERBUF[17:10]							
Access	R/W	R/W	R/W	R/W	R/W	R/W	R/W	R/W
Reset	1	1	1	1	1	1	1	1

Bit	15	14	13	12	11	10	9	8
	PERBUF[9:2]							
Access	R/W	R/W	R/W	R/W	R/W	R/W	R/W	R/W
Reset	1	1	1	1	1	1	1	1

Bit	7	6	5	4	3	2	1	0
	PERBUF[1:0]		DITHERBUF[5:0]					
Access	R/W	R/W	R/W	R/W	R/W	R/W	R/W	R/W
Reset	1	1	1	1	1	1	1	1

Bits 23:6 – PERBUF[17:0] Period Buffer Value
These bits hold the value of the period buffer register. The value is copied to PER register on UPDATE condition.
Note: When the TCC is configured as 16-bit timer/counter, the excess bits are read zero.

Note: This bit field occupies the MSB of the register, [23:m]. m is dependent on the Resolution bit in the Control A register (CTRLA.RESOLUTION):

CTRLA.RESOLUTION	Bits [23:m]
0x0 - NONE	23:0
0x1 - DITH4	23:4
0x2 - DITH5	23:5
0x3 - DITH6	23:6 (depicted)

Bits 5:0 – DITHERBUF[5:0] Dithering Buffer Cycle Number
These bits represent the PER.DITHER bits buffer. When the double buffering is enabled, the value of this bit field is copied to the PER.DITHER bits on an UPDATE condition.
Note: This bit field consists of the n LSB of the register. n is dependent on the value of the Resolution bits in the Control A register (CTRLA.RESOLUTION):

CTRLA.RESOLUTION	Bits [n:0]
0x0 - NONE	-
0x1 - DITH4	3:0
0x2 - DITH5	4:0
0x3 - DITH6	5:0 (depicted)

34.7.21 Channel x Compare/Capture Buffer Value

Name: CCBUF
Offset: 0x70 + n*0x04 [n=0..3]
Reset: 0x00000000
Property: Write-Synchronized, Read-Synchronized

CCBUFx is copied into CCx at TCC update time

Bit	31	30	29	28	27	26	25	24
Access								
Reset								

Bit	23	22	21	20	19	18	17	16
	CCBUF[17:10]							
Access	R/W	R/W	R/W	R/W	R/W	R/W	R/W	R/W
Reset	0	0	0	0	0	0	0	0

Bit	15	14	13	12	11	10	9	8
	CCBUF[9:2]							
Access	R/W	R/W	R/W	R/W	R/W	R/W	R/W	R/W
Reset	0	0	0	0	0	0	0	0

Bit	7	6	5	4	3	2	1	0
	CCBUF[1:0]		DITHERBUF[5:0]					
Access	R/W	R/W	R/W	R/W	R/W	R/W	R/W	R/W
Reset	0	0	0	0	0	0	0	0

Bits 23:6 – CCBUF[17:0] Channel x Compare/Capture Buffer Value
These bits hold the value of the Channel x Compare/Capture Buffer Value register. The register serves as the buffer for the associated compare or capture registers (CCx). Accessing this register using the CPU or DMA will affect the corresponding CCBUFVx status bit.
Note: When the TCC is configured as 16-bit timer/counter, the excess bits are read zero.

Note: This bit field occupies the MSB of the register, [23:m]. m is dependent on the Resolution bit in the Control A register (CTRLA.RESOLUTION):

CTRLA.RESOLUTION	Bits [23:m]
0x0 - NONE	23:0
0x1 - DITH4	23:4
0x2 - DITH5	23:5
0x3 - DITH6	23:6 (depicted)

Bits 5:0 – DITHERBUF[5:0] Dithering Buffer Cycle Number
These bits represent the CCx.DITHER bits buffer. When the double buffering is enable, DITHERBUF bits value is copied to the CCx.DITHER bits on an UPDATE condition.
Note: This bit field consists of the n LSB of the register. n is dependent on the value of the Resolution bits in the Control A register (CTRLA.RESOLUTION):

CTRLA.RESOLUTION	Bits [n:0]
0x0 - NONE	-
0x1 - DITH4	3:0
0x2 - DITH5	4:0
0x3 - DITH6	5:0 (depicted)

35. Configurable Custom Logic (CCL)

35.1 Overview

The Configurable Custom Logic (CCL) is a programmable logic peripheral which can be connected to the device pins, events, or other internal peripherals. This enables the user to eliminate logic gates for simple glue logic functions on the PCB.

Each LookUp Table (LUT) consists of three inputs: a truth table, an optional synchronizer/filter, and an optional edge detector. Each LUT can generate an output as a user programmable logic expression with three inputs. Inputs can be individually masked.

The output can be combinatorially generated from the inputs, and can be filtered to remove spikes. Optional sequential logic can be used. The inputs of the sequential module are individually controlled by two independent, adjacent LUT (LUT0/LUT1, LUT2/LUT3 and so on) outputs, enabling complex waveform generation.

35.2 Features

- Glue logic for general purpose PCB design
- Up to 4 programmable LookUp Tables (LUTs)
- Combinatorial logic functions:
  AND, NAND, OR, NOR, XOR, XNOR, NOT
- Sequential logic functions:
  Gated D Flip-Flop, JK Flip-Flop, gated D Latch, RS Latch
- Flexible LUT inputs selection:
  - I/Os
  - Events
  - Internal peripherals
  - Subsequent LUT output
- Output can be connected to the I/O pins or the Event System
- Optional synchronizer, filter, or edge detector available on each LUT output

35.3 Block Diagram

Figure 35-1. Configurable Custom Logic

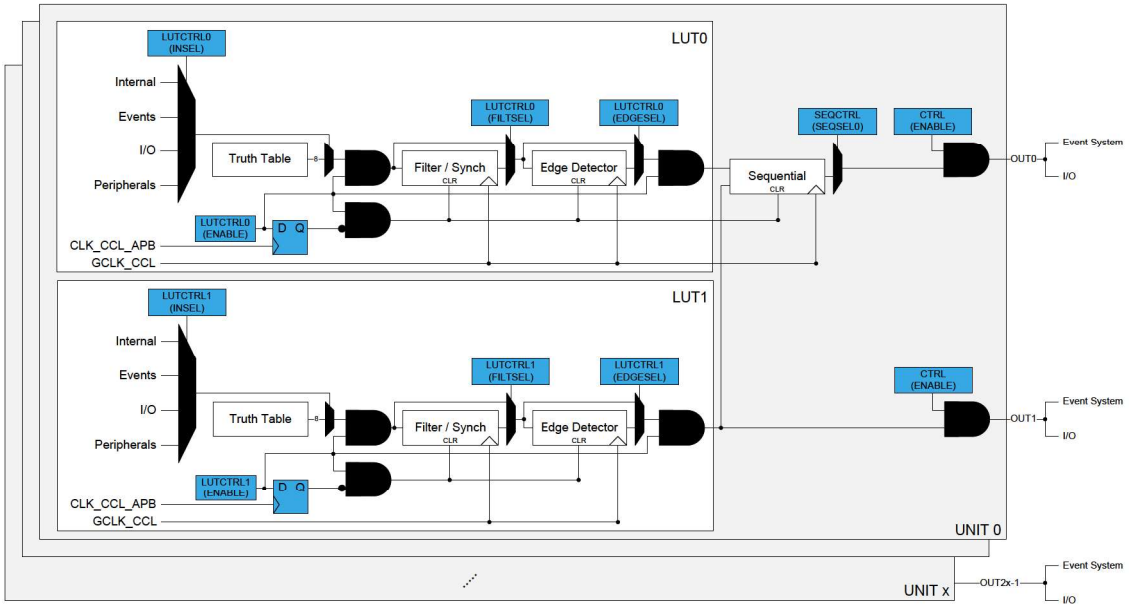

35.4 Signal Description

Pin Name	Type	Description
OUT[n:0]	Digital output	Output from lookup table
IN[3n+2:0]	Digital input	Input to lookup table

1. n is the number of CCL groups.

Refer to the 4. Pinout and Packaging for details on the pin mapping for this peripheral. One signal can be mapped on several pins.

35.5 Peripheral Dependencies

Peripheral	Base Address	IRQ	AHB CLK	APB CLK	Generic CLK	PAC		Events		DMA	Sleep Walking
			Enabled at reset	Enabled at reset	Index	Index	Prot at reset	User	Generator	Index	
CCL	0x42005C00	-	-	N	32	23	N	37-40: LUTIN0-3	77-80: LUTOUT0-3	-	Y

35.6 Functional Description

35.6.1 Principle of Operation

Configurable Custom Logic (CCL) is a programmable logic block that can use the device port pins, internal peripherals, and the internal Event System as both input and output channels. The CCL can serve as glue logic between the device and external devices. The CCL can eliminate the need for external logic component and can also

help the designer overcome challenging real-time constrains by combining core independent peripherals in clever ways to handle the most time critical parts of the application independent of the CPU.

35.6.2 Operation

35.6.2.1 Initialization

The CCL bus clock (CLK_CCL_APB) is required to access the CCL registers. This clock can be enabled in the MCLK - Main Clock module.

A generic clock (GCLK_CCL) is optionally required to clock the CCL. This clock must be configured and enabled in the GCLK - Generic Clock Controller before using input events, filter, edge detection or sequential logic.

The following bits are enable-protected, meaning that they can only be written when the CCL module is disabled (CTRL.ENABLE=0):

- Sequential Selection bits in the Sequential Control x (SEQCTRLx.SEQSEL) register
- LUT Control n (LUTCTRLn) register, except the ENABLE bit

Enable-protected bits in the LUTCTRLn registers can be written at the same time as LUTCTRLn.ENABLE is written to '1', but not at the same time as LUTCTRLn.ENABLE is written to '0'.

Enable-protection is denoted by the Enable-Protected property in the register description.

35.6.2.2 Enabling, Disabling, and Resetting

The CCL is enabled by writing a '1' to the Enable bit in the Control register (CTRL.ENABLE). The CCL is disabled by writing a '0' to CTRL.ENABLE. When using sequential logic the control register enable must be written twice when enabling (CTRL.ENABLE = 1).

Each LUT is enabled by writing a '1' to the Enable bit in the LUT Control n register (LUTCTRLn.ENABLE). Each LUT is disabled by writing a '0' to LUTCTRLn.ENABLE.

The CCL is reset by writing a '1' to the Software Reset bit in the Control register (CTRL.SWRST). All registers in the CCL will be reset to their initial state, and the CCL will be disabled. Refer to 35.7.1 CTRL for details.

When the Peripheral Access Controller (PAC) is enabled for the CCL module (WRCTRL.PERID = 87) and a Software Reset (CTRL.SWRST) is executed, a PAC protection error will be generated. If the PAC interrupt is enabled, the interrupt flag for the CCL module (INTFLAGC.CCL) should be cleared.

35.6.2.3 Lookup Table Logic

The lookup table in each LUT unit can generate any logic expression OUT as a function of three inputs (IN[2:0]), as shown in Figure 35-2. One or more inputs can be masked. The truth table for the expression is defined by TRUTH bits in LUT Control n register (LUTCTRLn.TRUTH).

Figure 35-2. Truth Table Output Value Selection

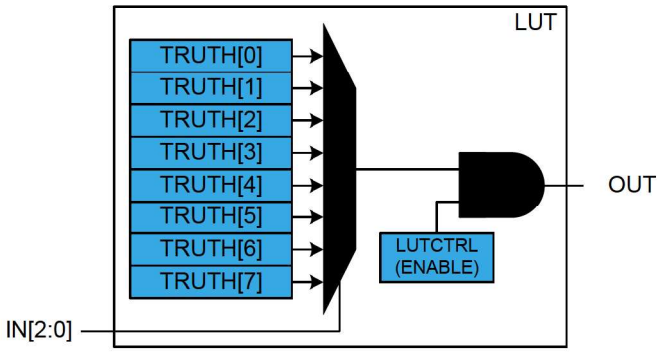

Table 35-1. Truth Table of LUT

IN[2]	IN[1]	IN[0]	OUT
0	0	0	TRUTH[0]
0	0	1	TRUTH[1]

.....continued			
IN[2]	**IN[1]**	**IN[0]**	**OUT**
0	1	0	TRUTH[2]
0	1	1	TRUTH[3]
1	0	0	TRUTH[4]
1	0	1	TRUTH[5]
1	1	0	TRUTH[6]
1	1	1	TRUTH[7]

35.6.2.4 Truth Table Inputs Selection

Input Overview
The inputs can be individually:

- Masked
- Driven by peripherals:
  - Analog comparator output (AC)
  - Timer/Counters waveform outputs (TC)
  - Serial Communication output transmit interface (SERCOM)
  - Timer/Counters for Control Applications waveform outputs (TCC)
- Driven by internal events from Event System
- Driven by other CCL sub-modules

The Input Selection for each input y of LUT n is configured by writing the Input x Source Selection bit in the LUT n Control register (LUTCTRLn.INSELx).

Masked Inputs (MASK)
When a LUT input is masked (LUTCTRLn.INSELx=MASK), the corresponding TRUTH input (IN) is internally tied to zero, as shown in this figure:

Figure 35-3. Masked Input Selection

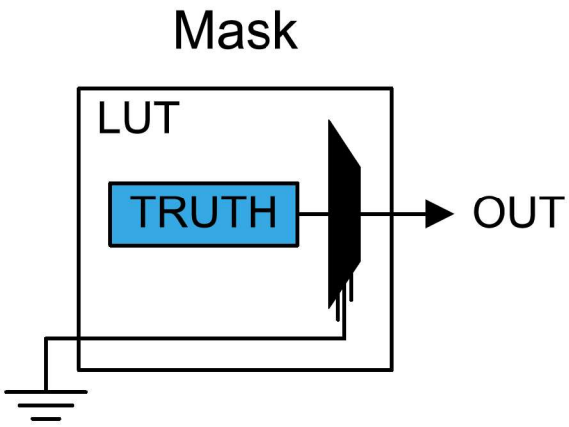

Internal Feedback Inputs (FEEDBACK)
When selected (LUTCTRLn.INSELx=FEEDBACK), the Sequential (SEQ) output is used as input for the corresponding LUT.

The output from an internal sequential sub-module can be used as input source for the LUT, see figure below for an example for LUT0 and LUT1. The sequential selection for each LUT follows the formula:

$IN[2n][x] = \mathrm{SEQ}[n]$

$IN[2n+1][x] = \mathrm{SEQ}[n]$

With *n* representing the sequencer number and *x*=0,1,2 representing the LUT input index.

Figure 35-4. Feedback Input Selection

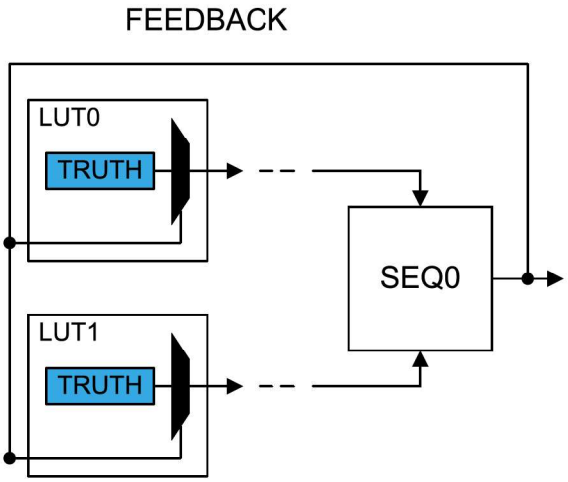

Linked LUT (LINK)

When selected (LUTCTRLn.INSELx=LINK), the subsequent LUT output is used as the LUT input (e.g., LUT2 is the input for LUT1), as shown in this figure:

Figure 35-5. Linked LUT Input Selection

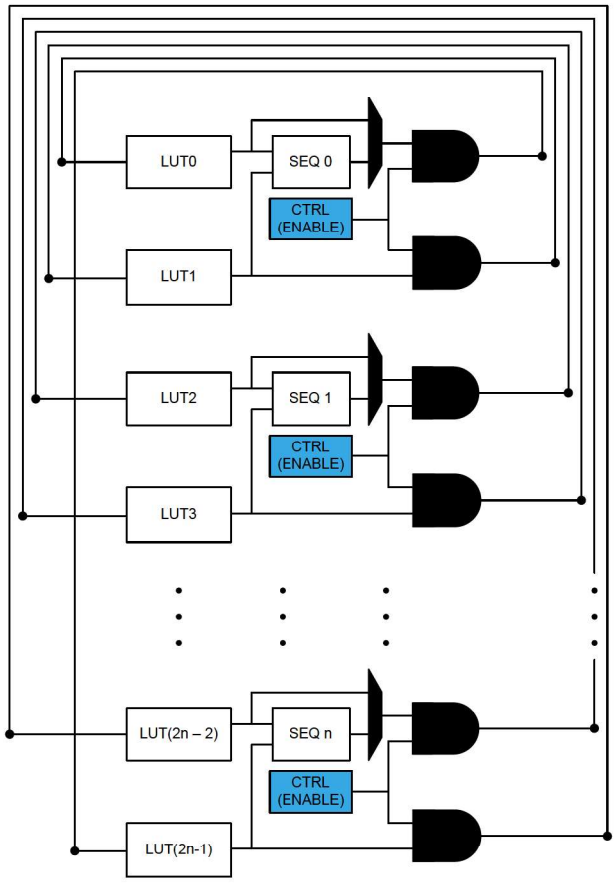

Internal Events Inputs Selection (EVENT)

Asynchronous events from the Event System can be used as input selection, as shown in the following figure. For each LUT, one event input line is available and can be selected on each LUT input. Before enabling the event selection by writing LUTCTRLn.INSELx = EVENT, the Event System must be configured first.

By default CCL includes an edge detector. When the event is received, an internal strobe is generated when a rising edge is detected. The pulse duration is one GCLK_CCL clock cycle. Writing the LUTCTRLn.INSELx = ASYNCEVENT will disable the edge detector. In this case, it is possible to combine an asynchronous event input with any other input source. This is typically useful with event levels inputs (external IO pin events, as example). The following steps ensure proper operation:

1. Enable the GCLK_CCL clock.
2. Configure the Event System to route the event asynchronously.
3. Select the event input type (LUTCTRLn.INSEL=ASYNCEVENT).
4. If a strobe must be generated on the event input falling edge, write a '1' to the Inverted Event Input Enable bit in LUT Control register (LUTCTRLn.INVEI) .
5. Enable the event input by writing the Event Input Enable bit in LUT Control register (LUTCTRLn.LUTEI) to '1'.

Figure 35-6. Event Input Selection

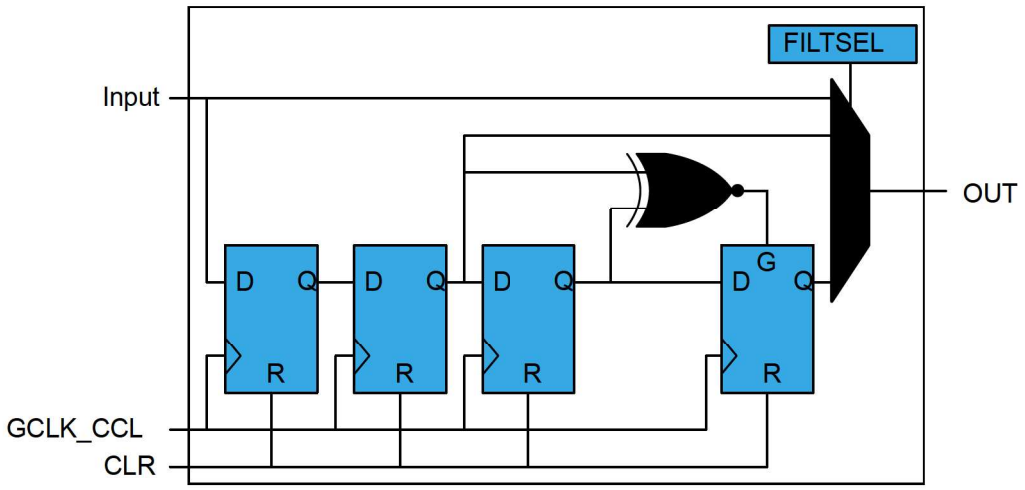

I/O Pin Inputs (IO)

When the IO pin is selected as LUT input (LUTCTRLn.INSELx = IO), the corresponding LUT input will be connected to the pin, as shown in the figure below.

Figure 35-7. I/O Pin Input Selection

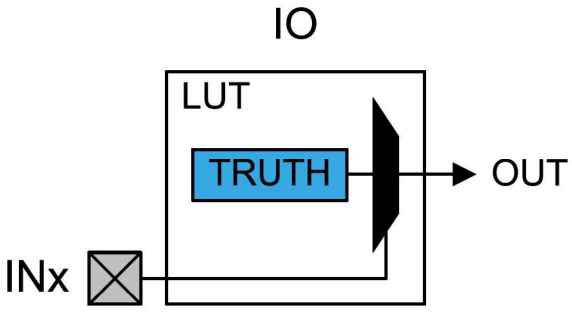

Analog Comparator Inputs (AC)

The AC outputs can be used as input source for the LUT (LUTCTRLn.INSELx = AC).

The analog comparator outputs are distributed following the formula:

```
IN[n][x]= AC[n % ComparatorOutput_Number]
```

With *n* representing the LUT number and *x*=[0,1,2] representing the LUT input index.

Before selecting the comparator output, the AC must be configured first.

Figure 35-8. AC Input Selection

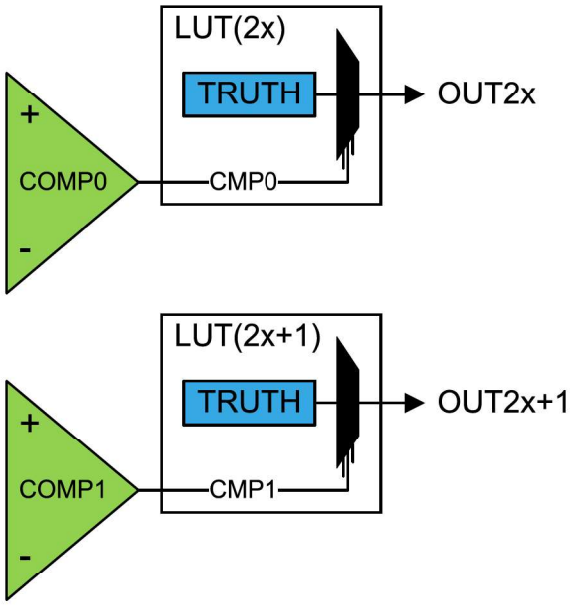

Timer/Counter Inputs (TC)

The TC waveform output WO[0] can be used as input source for the LUT (LUTCTRLn.INSELx=TC). TCn, TC(n+1), and TC(n+4) are available respectively as default, alternative TC and second alternative TC selections (i.e., TC0, TC1 and TC4 are sources for LUT0, TC1, TC2 and TC5 are sources for LUT1, etc). See the figure below for an example for LUT0. More general, the Timer/Counter selection for each LUT follows the formula:

$\mathrm{IN}[n][x] = DefaultTC[n]$

$\mathrm{IN}[n][x] = AlternativeTC[(n+1)]$

$\mathrm{IN}[n][x] = SecondAlternativeTC[(n+4)]$

Where *n* represents the LUT number and *x* represents the LUT input index (*x*=0,1,2).

Before selecting the waveform outputs, the 33. Timer Counter (TC) must be configured.

Figure 35-9. TC Input Selection

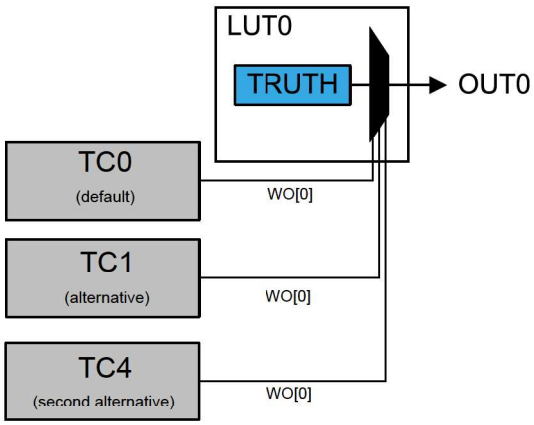

Timer/Counter for Control Application Inputs (TCC)
The TCC waveform outputs can be used as input source for the LUT. Only WO[2:0] outputs can be selected and routed to the respective LUT input (i.e., IN0 is connected to WO0, IN1 to WO1, and IN2 to WO2), as shown in the figure below.

Note:
The TCC selection for each LUT follows the formula:

$$\mathrm{IN}[n][x] = TCC[\mathrm{n}\ \%\ \mathrm{TCC_Instance_Number}].WO[x]$$

Where *n* represents the LUT number and *x* represents the LUT input index (i=0,1,2).

Before selecting the waveform outputs, the TCC must be configured.

Note: TCC2 only outputs 2 WO signals, so TCC2.WO[0] is connected to both LUT2.IN[0] and LUT2.IN[2], and TCC2.WO[1] is connected to LUT2.IN[1].

Figure 35-10. TCC Input Selection

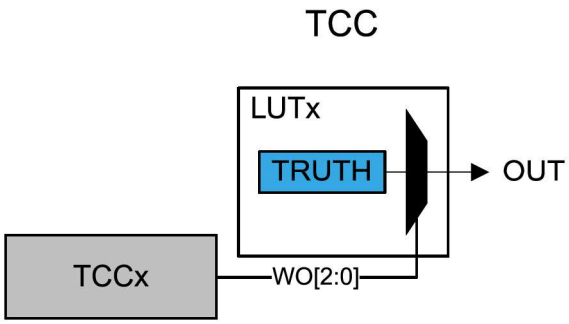

Serial Communication Output Transmit Inputs (SERCOM)
The serial engine transmitter output from Serial Communication Interface (SERCOM TX, TXd for USART, MOSI for SPI) can be used as input source for the LUT. The figure below shows an example for LUT0 and LUT1. The SERCOM selection for each LUT follows the formula:

$$\mathrm{IN}[n][x] = SERCOM[n\ \%\ \mathrm{SERCOM_Instance_Number}]$$

With *n* representing the LUT number and *x*=0,1,2 representing the LUT input index.

Before selecting the SERCOM as input source, the SERCOM must be configured first: the SERCOM TX signal must be output on SERCOMn/pad[0], which serves as input pad to the CCL.

Figure 35-11. SERCOM Input Selection

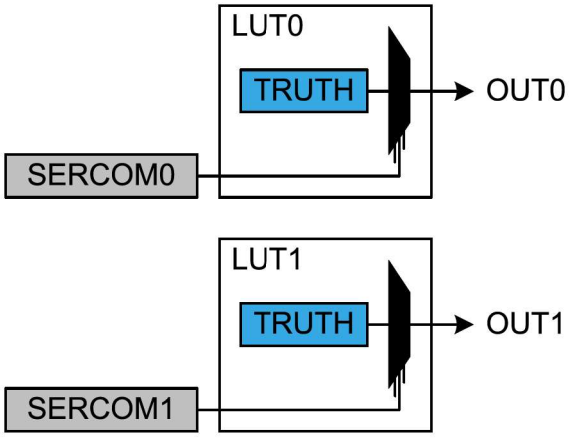

35.6.2.5 Filter

By default, the LUT output is a combinatorial function of the LUT inputs. This may cause some short glitches when the inputs change value. These glitches can be removed by clocking through filters, if demanded by application needs.

The Filter Selection bits in LUT Control register (LUTCTRLn.FILTSEL) define the synchronizer or digital filter options. When a filter is enabled, the OUT output will be delayed by two to five GCLK cycles. One APB clock after the corresponding LUT is disabled, all internal filter logic is cleared.

Note: Events used as LUT input will also be filtered, if the filter is enabled.

Figure 35-12. Filter

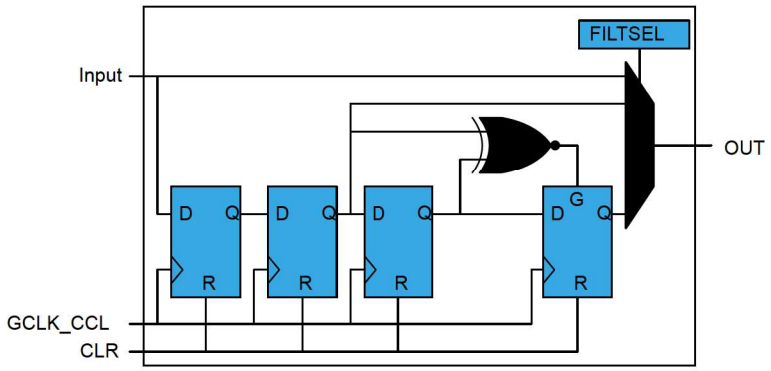

35.6.2.6 Edge Detector

The edge detector can be used to generate a pulse when detecting a rising edge on its input. To detect a falling edge, the TRUTH table should be inverted.

The edge detector is enabled by writing '1' to the Edge Selection bit in LUT Control register (LUTCTRLn.EDGESEL). In order to avoid unpredictable behavior, either the filter or synchronizer must be enabled.

Edge detection is disabled by writing a '0' to LUTCTRLn.EDGESEL. After disabling a LUT, the corresponding internal Edge Detector logic is cleared one APB clock cycle later.

Figure 35-13. Edge Detector

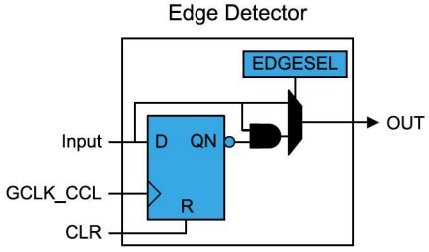

35.6.2.7 Sequential Logic

Each LUT pair can be connected to the internal sequential logic which can be configured to work as D flip flop, JK flip flop, gated D-latch or RS-latch by writing the Sequential Selection bits on the corresponding Sequential Control x register (SEQCTRLx.SEQSEL). Before using sequential logic, the GCLK_CCL clock and optionally each LUT filter or edge detector must be enabled.

Note: While configuring the sequential logic, the even LUT must be disabled. When configured the even LUT must be enabled.

Gated D Flip-Flop (DFF)

When the DFF is selected, the D-input is driven by the even LUT output (LUT0 and LUT2), and the G-input is driven by the odd LUT output (LUT1 and LUT3), as shown in Figure 35-14.

Figure 35-14. D Flip Flop

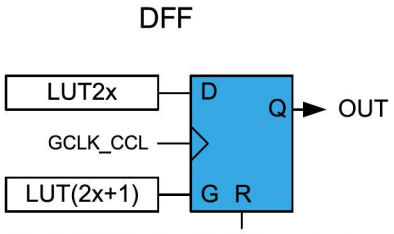

When the even LUT is disabled (LUTCTRL0.ENABLE=0 / LUTCTRL2.ENABLE=0), the flip-flop is asynchronously cleared. The reset command (R) is kept enabled for one APB clock cycle. In all other cases, the flip-flop output (OUT) is refreshed on rising edge of the GCLK_CCL, as shown in Table 35-2.

Table 35-2. DFF Characteristics

R	G	D	OUT
1	X	X	Clear
0	1	1	Set
		0	Clear
	0	X	Hold state (no change)

JK Flip-Flop (JK)

When this configuration is selected, the J-input is driven by the even LUT output (LUT0 and LUT2), and the K-input is driven by the odd LUT output (LUT1 and LUT3), as shown in Figure 35-15.

Figure 35-15. JK Flip Flop

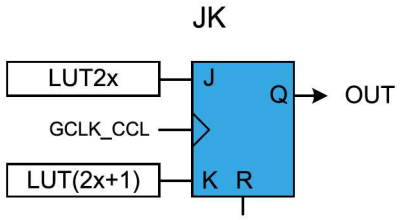

When the even LUT is disabled (LUTCTRL0.ENABLE=0 / LUTCTRL2.ENABLE=0), the flip-flop is asynchronously cleared. The reset command (R) is kept enabled for one APB clock cycle. In all other cases, the flip-flop output (OUT) is refreshed on rising edge of the GCLK_CCL, as shown in Table 35-3.

Table 35-3. JK Characteristics

R	J	K	OUT
1	X	X	Clear
0	0	0	Hold state (no change)
0	0	1	Clear
0	1	0	Set
0	1	1	Toggle

Gated D-Latch (DLATCH)

When the DLATCH is selected, the D-input is driven by the even LUT output (LUT0 and LUT2), and the G-input is driven by the odd LUT output (LUT1 and LUT3), as shown in Figure 35-14.

Figure 35-16. D-Latch

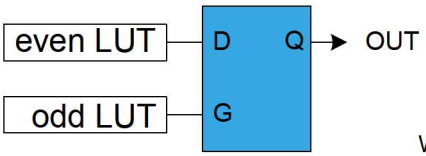

When the even LUT is disabled (LUTCTRL0.ENABLE=0 / LUTCTRL2.ENABLE=0), the latch output will be cleared. The G-input is forced enabled for one more APB clock cycle, and the D-input to zero. In all other cases, the latch output (OUT) is refreshed as shown in Table 35-4.

Table 35-4. D-Latch Characteristics

G	D	OUT
0	X	Hold state (no change)
1	0	Clear
1	1	Set

RS Latch (RS)

When this configuration is selected, the S-input is driven by the even LUT output (LUT0 and LUT2), and the R-input is driven by the odd LUT output (LUT1 and LUT3), as shown in Figure 35-17.

Figure 35-17. RS-Latch

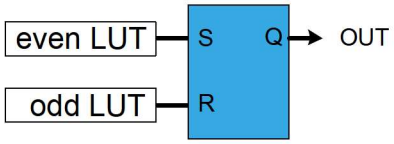

When the even LUT is disabled LUTCTRL0.ENABLE=0 / LUTCTRL2.ENABLE=0), the latch output will be cleared. The R-input is forced enabled for one more APB clock cycle and S-input to zero. In all other cases, the latch output (OUT) is refreshed as shown in Table 35-5.

Table 35-5. RS-Latch Characteristics

S	R	OUT
0	0	Hold state (no change)
0	1	Clear
1	0	Set
1	1	Forbidden state

35.6.3 Events

The CCL can generate the following output events:

- OUTn: Lookup Table Output Value

Writing a '1' to the LUT Control Event Output Enable bit (LUTCTRLn.LUTEO) enables the corresponding output event. Writing a '0' to this bit disables the corresponding output event.

The CCL can take the following actions on an input event:

- INSELx: The event is used as input for the TRUTH table.

Writing a '1' to the LUT Control Event Input Enable bit (LUTCTRLn.LUTEI) enables the corresponding action on input event. Writing a '0' to this bit disables the corresponding action on input event.

For further information, refer to the 28. Event System (EVSYS).

35.6.4 Sleep Mode Operation

When using the GCLK_CCL internal clocking, writing the Run In Standby bit in the Control register (CTRL.RUNSTDBY) to '1' will allow GCLK_CCL to be enabled in Standby Sleep mode.

If CTRL.RUNSTDBY=0, the GCLK_CCL will be disabled in Standby Sleep mode. If the Filter, Edge Detector or Sequential logic are enabled, the LUT output will be forced to zero in STANDBY mode. In all other cases, the TRUTH table decoder will continue operation and the LUT output will be refreshed accordingly.

For further information, refer to the 16. Power Manager (PM).

35.7 Register Summary

Offset	Name	Bit Pos.	7	6	5	4	3	2	1	0
0x00	CTRL	7:0		RUNSTDBY					ENABLE	SWRST
0x01 ... 0x03	Reserved									
0x04	SEQCTRL0	7:0					SEQSEL[3:0]			
0x05	SEQCTRL1	7:0					SEQSEL[3:0]			
0x06 ... 0x07	Reserved									
0x08	LUTCTRL0	7:0	EDGESEL		FILTSEL[1:0]				ENABLE	
		15:8	INSEL1[3:0]				INSEL0[3:0]			
		23:16		LUTEO	LUTEI	INVEI	INSEL2[3:0]			
		31:24	TRUTH[7:0]							
0x0C	LUTCTRL1	7:0	EDGESEL		FILTSEL[1:0]				ENABLE	
		15:8	INSEL1[3:0]				INSEL0[3:0]			
		23:16		LUTEO	LUTEI	INVEI	INSEL2[3:0]			
		31:24	TRUTH[7:0]							
0x10	LUTCTRL2	7:0	EDGESEL		FILTSEL[1:0]				ENABLE	
		15:8	INSEL1[3:0]				INSEL0[3:0]			
		23:16		LUTEO	LUTEI	INVEI	INSEL2[3:0]			
		31:24	TRUTH[7:0]							
0x14	LUTCTRL3	7:0	EDGESEL		FILTSEL[1:0]				ENABLE	
		15:8	INSEL1[3:0]				INSEL0[3:0]			
		23:16		LUTEO	LUTEI	INVEI	INSEL2[3:0]			
		31:24	TRUTH[7:0]							

35.7.1 Control

Name: CTRL
Offset: 0x00
Reset: 0x00
Property: PAC Write-Protection

Note: CTRL register (except the bits ENABLE & SWRST) is Enable Protected when CCL.CTRL.ENABLE = 1.

Bit	7	6	5	4	3	2	1	0
		RUNSTDBY					ENABLE	SWRST
Access		R/W					R/W	W
Reset		0					0	0

Bit 6 – RUNSTDBY Run in Standby
This bit indicates if the GCLK_CCL clock must be kept running in standby mode. The setting is ignored for configurations where the generic clock is not required. For details refer to 35.6.4 Sleep Mode Operation.

Important: This bit must be written before enabling the CCL.

Value	Description
0	Generic clock is not required in standby sleep mode.
1	Generic clock is required in standby sleep mode.

Bit 1 – ENABLE Enable

Value	Description
0	The peripheral is disabled.
1	The peripheral is enabled.

Bit 0 – SWRST Software Reset
Writing a '0' to this bit has no effect.
Writing a '1' to this bit resets all registers in the CCL to their initial state.

Value	Description
0	There is no reset operation ongoing.
1	The reset operation is ongoing.

35.7.2 Sequential Control x

Name: SEQCTRL
Offset: 0x04 + n*0x01 [n=0..1]
Reset: 0x00
Property: PAC Write-Protection, Enable-Protected

Note: The SEQCTRL0 (SEQCTRL1) register is Enable-protected when CCL.CTRL.ENABLE = 1.

Bit	7	6	5	4	3	2	1	0
					SEQSEL[3:0]			
Access					R/W	R/W	R/W	R/W
Reset					0	0	0	0

Bits 3:0 – SEQSEL[3:0] Sequential Selection
These bits select the sequential configuration:
Sequential Selection

Value	Name	Description
0x0	DISABLE	Sequential logic is disabled
0x1	DFF	D flip flop
0x2	JK	JK flip flop
0x3	LATCH	D latch
0x4	RS	RS latch
0x5 - 0xF		Reserved

35.7.3 LUT Control n

Name: LUTCTRLn
Offset: 0x08 + n*0x04 [n=0..3]
Reset: 0x00000000
Property: PAC Write-Protection, Enable-protected

Note: The LUTCTRLn register is Enable Protected when CCL.CTRL.ENABLE = 1.

Bit	31	30	29	28	27	26	25	24
	TRUTH[7:0]							
Access	R/W	R/W	R/W	R/W	R/W	R/W	R/W	R/W
Reset	0	0	0	0	0	0	0	0

Bit	23	22	21	20	19	18	17	16
		LUTEO	LUTEI	INVEI	INSEL2[3:0]			
Access		R/W	R/W	R/W	R/W	R/W	R/W	R/W
Reset		0	0	0	0	0	0	0

Bit	15	14	13	12	11	10	9	8
	INSEL1[3:0]				INSEL0[3:0]			
Access	R/W	R/W	R/W	R/W	R/W	R/W	R/W	R/W
Reset	0	0	0	0	0	0	0	0

Bit	7	6	5	4	3	2	1	0
	EDGESEL		FILTSEL[1:0]				ENABLE	
Access	R/W		R/W	R/W			R/W	
Reset	0		0	0			0	

Bits 31:24 – TRUTH[7:0] Truth Table
These bits define the value of truth logic as a function of inputs IN[2:0].

Bit 22 – LUTEO LUT Event Output Enable

Value	Description
0	LUT event output is disabled.
1	LUT event output is enabled.

Bit 21 – LUTEI LUT Event Input Enable

Value	Description
0	LUT incoming event is disabled.
1	LUT incoming event is enabled.

Bit 20 – INVEI Inverted Event Input Enable

Value	Description
0	Incoming event is not inverted.
1	Incoming event is inverted.

Bits 8:11, 12:15, 16:19 – INSELx LUT Input x Source Selection
These bits select the LUT input x source:

Value	Name	Description
0x0	MASK	Masked input
0x1	FEEDBACK	Feedback input source
0x2	LINK	Linked LUT input source
0x3	EVENT	Event input source
0x4	IO	I/O pin input source
0x5	AC	AC input source: CMP[0] (LUT0) / CMP[1] (LUT1)

Value	Name	Description
0x6	TC	TC input source: TC0 (LUT0) / TC1 (LUT1)/ TC2 (LUT2) / TC3 (LUT3)
0x7	ALTTC	Alternative TC input source: TC1 (LUT0) / TC2 (LUT1) / TC3 (LUT2) / TC4 (LUT3)
0x8	TCC	TCC input source: TCC0 (LUT0) / TCC1 (LUT1)/ TCC2 (LUT2)
0x9	SERCOM	SERCOM input source: SERCOM0 (LUT0) / SERCOM1 (LUT1)/ SERCOM2 (LUT2) / SERCOM3 (LUT3)
0xA - 0xF	Reserved	Reserved

Bit 7 – EDGESEL Edge Selection

Value	Description
0	Edge detector is disabled.
1	Edge detector is enabled.

Bits 5:4 – FILTSEL[1:0] Filter Selection
These bits select the LUT output filter options:
Filter Selection

Value	Name	Description
0x0	DISABLE	Filter disabled
0x1	SYNCH	Synchronizer enabled
0x2	FILTER	Filter enabled
0x3	-	Reserved

Bit 1 – ENABLE LUT Enable

Value	Description
0	The LUT is disabled.
1	The LUT is enabled.

36. Analog-to-Digital Converter (ADC)

36.1 Overview

The Analog-to-Digital Converter (ADC) converts analog signals to digital values. The ADC has up to 12-bit resolution, and is capable of a sampling rate of up to 1 Msps. The input selection is flexible, and both differential and single-ended measurements can be performed. In addition, several internal signal inputs are available. The ADC can provide both signed and unsigned results.

ADC measurements can be started by either application software or an incoming event from another peripheral in the device. ADC measurements can be started with predictable timing and without software intervention.

Both internal and external reference voltages can be used.

The INTREF voltage reference (supplied by the bandgap), as well as the scaled I/O and core voltages, can be measured by the ADC.

The ADC has a compare function for accurate monitoring of user-defined thresholds, with minimum software intervention required. The ADC can be configured for 8, 10, or 12-bit results. ADC conversion results are provided left- or right-adjusted, which eases calculation when the result is represented as a signed value. It is possible to use DMA to move ADC results directly to memory or peripherals when conversions are done.

The device has two ADC instances, ADC0 and ADC1. The two inputs can be sampled simultaneously, as each ADC includes a dedicated sample and hold circuit.

36.2 Features

- Two Analog-to-Digital Converters (ADC): ADC0 and ADC1
- 8-bit, 10-bit, or 12-bit resolution
- Up to 1,000,000 samples per second (1 MSPS)
- Differential and single-ended inputs
  - Up to 14 analog inputs on ADC
    Up to 12 external analog inputs and 3 internal inputs
- Internal inputs:
  - INTREF voltage reference, supplied by the bandgap
  - Scaled core supply
  - Scaled I/O supply
  - DAC
- Single, continuous, and sequencing options
- Windowing monitor with selectable channel
- Conversion range: V_{ref} = [2.0V to VDD_{ANA}]
- Built-in internal reference and external reference options
- Event-triggered conversion for accurate timing (one event input)
- Optional DMA transfer of conversion settings or result
- Hardware gain and offset compensation
- Averaging and oversampling with decimation to support up to 16-bit result
- Selectable sampling time
- Flexible Power or Throughput rate management

36.3 Block Diagram

Figure 36-1. ADC Block Diagram

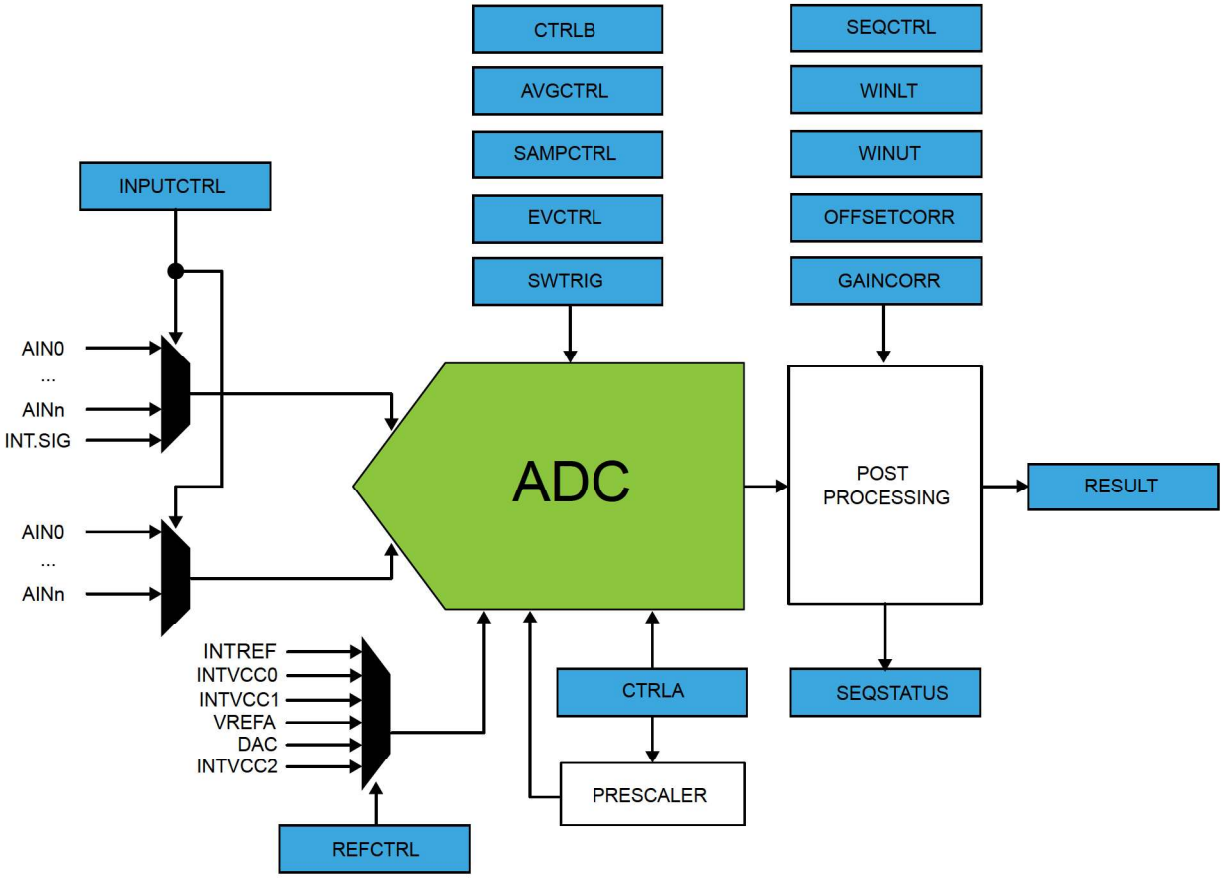

36.4 Signal Description

Signal	Description	Type
VREFA	Analog input	External reference voltage
AIN[11..0]	Analog input	Analog input channels

Note: One signal can be mapped on several pins.

For further information, refer to the Pinout.

36.5 Peripheral Dependencies

Peripheral	Base Address	IRQ	AHB CLK	APB CLK	Generic CLK	PAC		Events		DMA	Sleep Walking
			Enabled at reset	Enabled at reset	Index	Index	Prot at reset	User	Generator	Index	
ADC0	0x42004400	21	-	N	28	17	N	28: START 29: FLUSH	67: RESRDY 68: WINMON	36: RESRDY	Y

.....continued

Peripheral	Base Address	IRQ	AHB CLK	APB CLK	Generic CLK	PAC		Events		DMA	Sleep Walking
			Enabled at reset	Enabled at reset	Index	Index	Prot at reset	User	Generator	Index	
ADC1	0x42004800	22	-	N	29	18	N	30: START 31: FLUSH	69: RESRDY 70: WINMON	37: RESRDY	Y

36.6 Functional Description

36.6.1 Principle of Operation

By default, the ADC provides results with 12-bit resolution. 8-bit or 10-bit results can be selected in order to reduce the conversion time, see 36.6.2.8 Conversion Timing and Sampling Rate.

The ADC has an oversampling with decimation option that can extend its resolution to 16 bits. The input values can be either internal or external (connected I/O pins). The user can also configure whether the conversion should be single-ended or differential.

36.6.2 Basic Operation

36.6.2.1 Initialization

The following registers are enable-protected, meaning that they can only be written when the ADC is disabled (CTRLA.ENABLE=0):

- Control B register (CTRLB)
- Reference Control register (REFCTRL)
- Event Control register (EVCTRL)
- Calibration register (CALIB)

Enable-protection is denoted by the "Enable-Protected" property in the register description.

36.6.2.2 Enabling, Disabling and Resetting

The ADC is enabled by writing a '1' to the Enable bit in the Control A register (CTRLA.ENABLE). The ADC is disabled by writing CTRLA.ENABLE=0.

The ADC is reset by writing a '1' to the Software Reset bit in the Control A register (CTRLA.SWRST). All registers in the ADC, except DBGCTRL, will be reset to their initial state, and the ADC will be disabled. Refer to 36.7.1 CTRLA for details.

36.6.2.3 Operation

In the most basic configuration, the ADC samples values from the configured internal or external sources (INPUTCTRL register). The rate of the conversion depends on the combination of the GCLK_ADCx frequency and the clock prescaler.

To convert analog values to digital values, the ADC needs to be initialized first, as described in the Initialization section. Data conversion can be started either manually by setting the Start bit in the Software Trigger register (SWTRIG.START=1), or automatically by configuring an automatic trigger to initiate the conversions. The ADC starts sampling the input only after the start of conversion is triggered. This means that even after the MUX selection is made, sample and hold (S&H) operation starts only on the conversion trigger. Free-running mode can be used to continuously convert an input channel. When using free-running mode, conversions will start after the ADC is enabled.

The ADC starts sampling the input only after the start of a conversion is triggered. This means that even after the MUX selection is made, sample and hold operation starts only on the conversion trigger.

The result of the conversion is stored in the Result register (RESULT) overwriting the result from the previous conversion.

To avoid data loss, if more than one channel is enabled, the conversion result must be read as soon as it is available (INTFLAG.RESRDY). Failing to do so will result in an overrun error condition, indicated by the OVERRUN bit in the Interrupt Flag Status and Clear register (INTFLAG.OVERRUN).

To enable one of the available interrupts sources, the corresponding bit in the Interrupt Enable Set register (INTENSET) must be written to '1'.

36.6.2.4 Prescaler Selection

The ADC is clocked by GCLK_ADCx. There is also a prescaler in the ADC to enable conversion at lower clock rates. Refer to CTRLB for details on prescaler settings. Refer to 36.6.2.8 Conversion Timing and Sampling Rate for details on timing and sampling rate.

Figure 36-2. ADC Prescaler

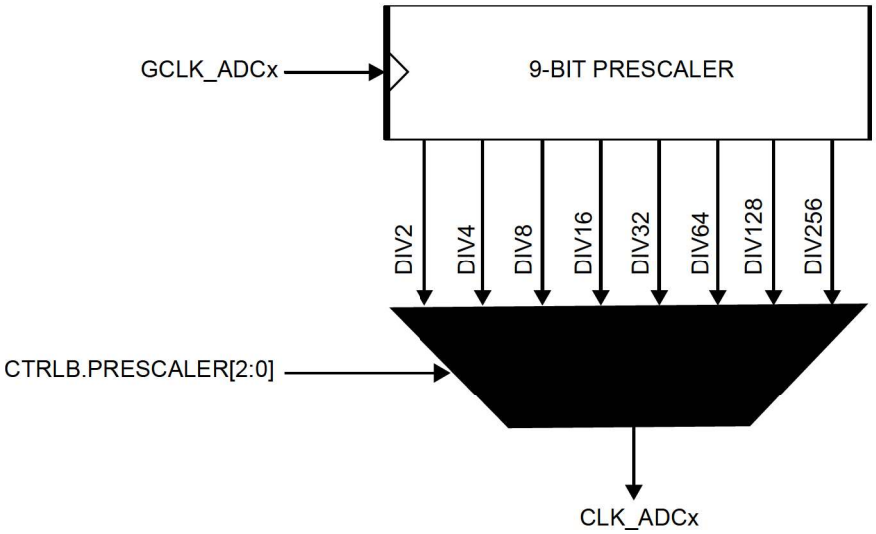

Note: The minimum prescaling factor is DIV2.

36.6.2.5 Reference Configuration

The ADC has various sources for its reference voltage V_{REF}. The Reference Voltage Selection bit field in the Reference Control register (REFCTRL.REFSEL) determines which reference is selected. By default, the internal voltage reference INTREF, supplied by the bandgap, is selected. Based on customer application requirements, the external or internal reference can be selected. Refer to REFCTRL.REFSEL for further details on available selections.

36.6.2.6 ADC Resolution

The ADC supports 8-bit, 10-bit or 12-bit resolution. Resolution can be changed by writing the Resolution bit group in the Control C register (CTRLC.RESSEL). By default, the ADC resolution is set to 12 bits. The resolution affects the propagation delay, see also 36.6.2.8 Conversion Timing and Sampling Rate.

36.6.2.7 Differential and Single-Ended Conversions

The ADC has two conversion options: differential and single-ended:

If the positive input is always positive, the single-ended conversion should be used in order to have full 12-bit resolution in the conversion.

If the positive input may go below the negative input, the differential mode should be used in order to get correct results.

The differential mode is enabled by setting DIFFMODE bit in the Control C register (CTRLC.DIFFMODE). Both conversion types could be run in single mode or in free-running mode. When the free-running mode is selected, an ADC input will continuously sample the input and perform a new conversion. The INTFLAG.RESRDY bit will be set at the end of each conversion.

36.6.2.8 Conversion Timing and Sampling Rate

The following figure shows the ADC timing for a single conversion. A conversion starts after the software or event start are synchronized with the GCLK_ADCx clock. The input channel is sampled in the first half of the CLK_ADCx period.

Figure 36-3. ADC Timing for One Conversion in 12-bit Resolution

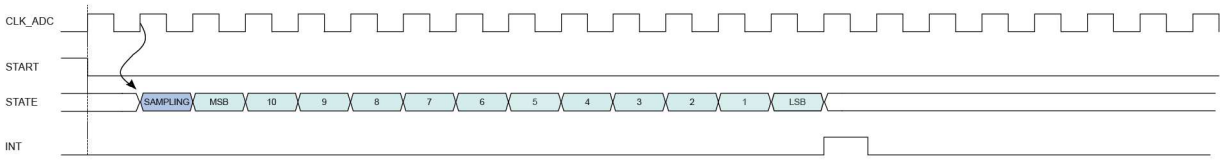

The sampling time can be increased by using the Sampling Time Length bit group in the Sampling Time Control register (SAMPCTRL.SAMPLEN). As example, the next figure is showing the timing conversion with sampling time increased to six CLK_ADC cycles.

Figure 36-4. ADC Timing for One Conversion with Increased Sampling Time, 12-bit

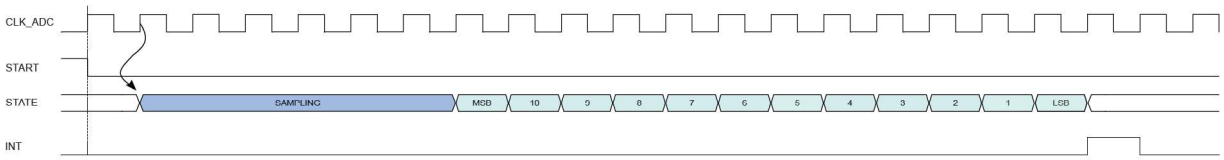

The ADC can also provide compensation, as shown in the following figure. The offset compensation is enabled by the Offset Compensation bit in the Sampling Control register (SAMPCTRL.OFFCOMP).

Note: ADC sampling time is fixed to 4 ADC Clock cycles when offset compensation (OFFCOMP=1) is used.

In free running mode, the sampling rate R_S is calculated by

$R_S = f_{CLK_ADC} / (n_{SAMPLING} + n_{OFFCOMP} + n_{DATA})$

Here, $n_{SAMPLING}$ is the sampling duration in CLK_ADC cycles, $n_{OFFCOMP}$ is the offset compensation duration in clock cycles, and n_{DATA} is the bit resolution. f_{CLK_ADC} is the ADC clock frequency from the internal prescaler: $f_{CLK_ADC} = f_{GCLK_ADC} / 2^{(1 + CTRLB.PRESCALER)}$

Figure 36-5. ADC Timing for One Conversion with Offset Compensation, 12-bit

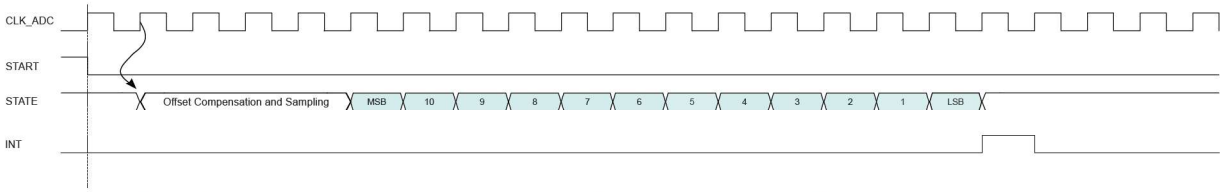

The impact of resolution on the sampling rate is seen in the next two figures, where free-running sampling in 12-bit and 8-bit resolution are compared.

Figure 36-6. ADC Timing for Free Running in 12-bit Resolution

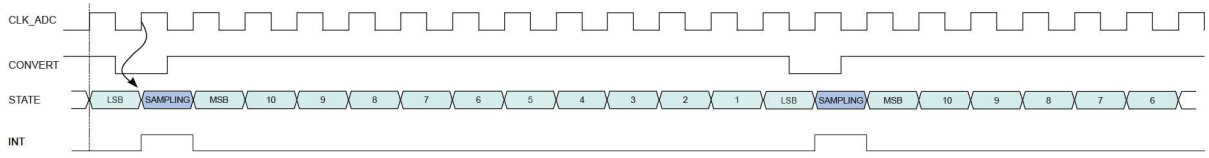

Figure 36-7. ADC Timing for Free Running in 8-bit Resolution

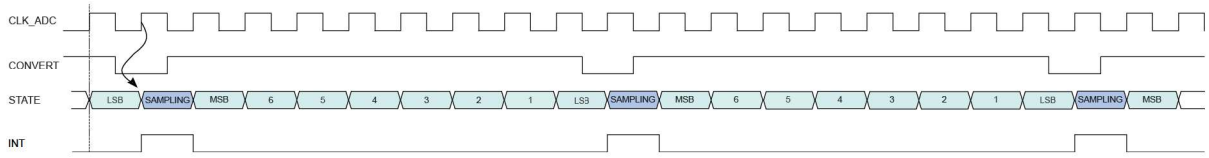

The propagation delay of an ADC measurement is given by:

$$\text{PropagationDelay} = \frac{1 + \text{Resolution}}{f_{\text{ADC}}}$$

Example. In order to obtain 1 MSPS in 12-bit resolution with a sampling time length of four CLK_ADC cycles, f_{CLK_ADC} must be 1 MSPS * (4 + 12) = 16 MHz. As the minimal division factor of the prescaler is 2, GCLK_ADC must be 32 MHz.

36.6.2.9 Accumulation

The result from multiple consecutive conversions can be accumulated. The number of samples to be accumulated is specified by the Sample Number field in the Average Control register (AVGCTRL.SAMPLENUM). When accumulating more than 16 samples, the result will be too large to match the 16-bit RESULT register size. To avoid overflow, the result is right shifted automatically to fit within the available register size. The number of automatic right shifts is specified in the table below.

Note: To perform the accumulation of two or more samples, the Conversion Result Resolution field in the Control C register (CTRLC.RESSEL) must be set depending on the final result precision. For resolutions strictly higher than 12 bits, RESSEL must be set to 16 bits.

Table 36-1. Accumulation

Number of Accumulated Samples	AVGCTRL. SAMPLENUM	Number of Automatic Right Shifts	Final Result Precision	Automatic Division Factor
1	0x0	0	12 bits	0
2	0x1	0	13 bits	0
4	0x2	0	14 bits	0
8	0x3	0	15 bits	0
16	0x4	0	16 bits	0
32	0x5	1	16 bits	2
64	0x6	2	16 bits	4
128	0x7	3	16 bits	8
256	0x8	4	16 bits	16
512	0x9	5	16 bits	32
1024	0xA	6	16 bits	64
Reserved	0xB –0xF		12 bits	0

36.6.2.10 Averaging

Averaging is a feature that increases the sample accuracy, at the cost of a reduced sampling rate. This feature is suitable when operating in noisy conditions.

Averaging is done by accumulating m samples, as described in 36.6.2.9 Accumulation, then dividing the result by m. The averaged result is available in the RESULT register. The number of samples to be accumulated is specified by writing to AVGCTRL.SAMPLENUM as shown in Table 36-2.

The division is obtained by a combination of the automatic right shift described above, and an additional right shift that must be specified by writing to the Adjusting Result/Division Coefficient field in AVGCTRL (AVGCTRL.ADJRES), as described in Table 36-2.

Note: To perform the averaging of two or more samples, the Conversion Result Resolution field in the Control C register (CTRLC.RESSEL) must be set.

Averaging AVGCTRL.SAMPLENUM samples will reduce the un-averaged sampling rate by a factor $\frac{1}{\text{AVGCTRL.SAMPLENUM}}$.

When the averaged result is available, the INTFLAG.RESRDY bit will be set.

Table 36-2. Averaging

Number of Accumulated Samples	AVGCTRL. SAMPLENUM	Intermediate Result Precision	Number of Automatic Right Shifts	Division Factor	AVGCTRL.ADJRES	Total Number of Right Shifts	Final Result Precision	Automatic Division Factor
1	0x0	12 bits	0	1	0x0		12 bits	0
2	0x1	13	0	2	0x1	1	12 bits	0
4	0x2	14	0	4	0x2	2	12 bits	0
8	0x3	15	0	8	0x3	3	12 bits	0
16	0x4	16	0	16	0x4	4	12 bits	0
32	0x5	17	1	16	0x4	5	12 bits	2
64	0x6	18	2	16	0x4	6	12 bits	4
128	0x7	19	3	16	0x4	7	12 bits	8
256	0x8	20	4	16	0x4	8	12 bits	16
512	0x9	21	5	16	0x4	9	12 bits	32
1024	0xA	22	6	16	0x4	10	12 bits	64
Reserved	0xB –0xF				0x0		12 bits	0

36.6.2.11 Oversampling and Decimation

By using oversampling and decimation, the ADC resolution can be increased from 12 bits up to 16 bits, for the cost of reduced effective sampling rate.

Note: To perform oversampling and decimation, the Conversion Result Resolution field in the Control C register (CTRLC.RESSEL) must be set to 16-bit mode.

To increase the resolution by n bits, 4^n samples must be accumulated. The result must then be right-shifted by n bits. This right-shift is a combination of the automatic right-shift and the value written to AVGCTRL.ADJRES. To obtain the correct resolution, the ADJRES must be configured as described in the table below. This method will result in n bit extra LSB resolution.

Table 36-3. Configuration Required for Oversampling and Decimation

Result Resolution	Number of Samples to Average	AVGCTRL.SAMPLENUM[3:0]	Number of Automatic Right Shifts	AVGCTRL.ADJRES[2:0]
13 bits	$4^1 = 4$	0x2	0	0x1
14 bits	$4^2 = 16$	0x4	0	0x2

.....continued				
Result Resolution	Number of Samples to Average	AVGCTRL.SAMPLENUM[3:0]	Number of Automatic Right Shifts	AVGCTRL.ADJRES[2:0]
15 bits	4^3 = 64	0x6	2	0x1
16 bits	4^4 = 256	0x8	4	0x0

36.6.2.12 Automatic Sequences

The ADC has the ability to automatically sequence a series of conversions. This means that each time the ADC receives a start-of-conversion request, it can perform multiple conversions automatically. All of the positive inputs can be included in a sequence by writing to corresponding bits in the Sequence Control register (SEQCTRL). The order of the conversion in a sequence is the lower positive MUX selection to upper positive MUX (AIN0, AIN1, AIN2 ...). In differential mode, the negative inputs selected by MUXNEG field, will be used for the entire sequence.

When a sequence starts, the Sequence Busy status bit in Sequence Status register (SEQSTATUS.SEQBUSY) will be set. When the sequence is complete, the Sequence Busy status bit will be cleared.

Each time a conversion is completed, the Sequence State bit in Sequence Status register (SEQSTATUS.SEQSTATE) will store the input number from which the conversion is done. The result will be stored in the RESULT register, and the Result Ready Interrupt Flag (INTFLAG.RESRDY) is set.

If additional inputs must be scanned, the ADC will automatically start a new conversion on the next input present in the sequence list.

Note that if SEQCTRL register has no bits set to '1', the conversion is done with the selected MUXPOS input.

36.6.2.13 Window Monitor

The window monitor feature allows the conversion result in the RESULT register to be compared to predefined threshold values. The window mode is selected by setting the Window Monitor Mode bits in the Control C register (CTRLC.WINMODE). Threshold values must be written in the Window Monitor Lower Threshold register (WINLT) and Window Monitor Upper Threshold register (WINUT).

If differential input is selected, the WINLT and WINUT are evaluated as signed values. Otherwise they are evaluated as unsigned values. The significant WINLT and WINUT bits are given by the precision selected in the Conversion Result Resolution bit group in the Control C register (CTRLC.RESSEL). This means that for example in 8-bit mode, only the eight lower bits will be considered. In addition, in differential mode, the eighth bit will be considered as the sign bit, even if the ninth bit is zero.

The INTFLAG.WINMON interrupt flag will be set if the conversion result matches the window monitor condition.

36.6.2.14 Offset and Gain Correction

Inherent gain and offset errors affect the absolute accuracy of the ADC.

The offset error is defined as the deviation of the actual ADC transfer function from an ideal straight line at zero input voltage. The offset error cancellation is handled by the Offset Correction register (OFFSETCORR). The offset correction value is subtracted from the converted data before writing the Result register (RESULT). Offset correction is only to be used with 12-bit conversion resolution.

The gain error is defined as the deviation of the last output step's midpoint from the ideal straight line, after compensating for offset error. The gain error cancellation is handled by the Gain Correction register (GAINCORR).

To correct these two errors, the Digital Correction Logic Enabled bit in the Control C register (CTRLC.CORREN) must be set.

Offset and gain error compensation results are both calculated according to:

$$\text{Result} = (\text{Conversion value} + - \text{OFFSETCORR}) \cdot \text{GAINCORR}$$

The correction will introduce a latency of 13 CLK_ADC clock cycles. In free running mode this latency is introduced on the first conversion only, since its duration is always less than the propagation delay. In single conversion mode this latency is introduced for each conversion.

Figure 36-8. ADC Timing Correction Enabled

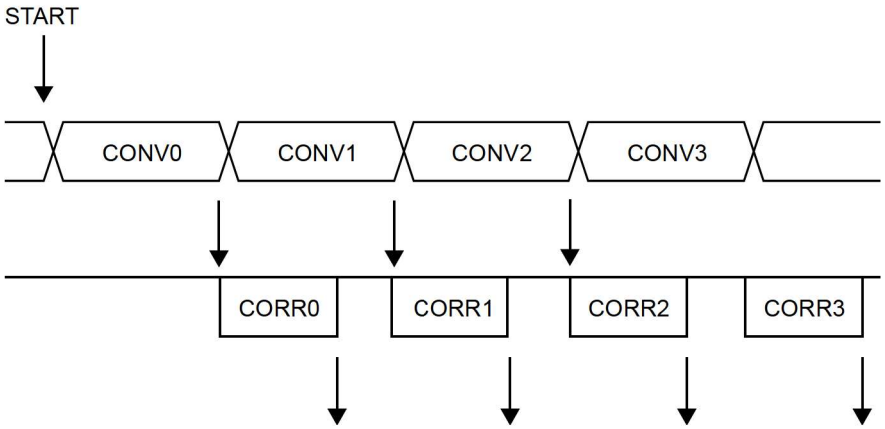

36.6.2.15 Reference Buffer Compensation Offset

A hardware compensation using a reference buffer can be used. When the REFCTRL.REFCOMP bit is set, the offset of the reference buffer is sensed during the ADC sampling phase. This offset will be then canceled during the conversion phase. This feature allows for the decrease of the overall gain error of the ADC.

There is a digital gain correction (refer to Offset and Gain Correction) but contrary to that digital gain correction, the hardware compensation will not introduce any latency. However, when using REFCOMP and if the ADC reference selection is not using VDDANA (REFCTRL.REFSEL != INTVCC2), the first 5 conversions of the ADC must be discarded after the ADC is enabled.

36.6.3 Additional Features

36.6.3.1 Master/Slave Operation

The master/slave operation is available only on devices with two ADC instances. The ADC1 will be enabled as a slave of ADC0 instance when writing a one to the Slave Enable bit in Control A register of the ADC1 instance (ADC1.CTRLA.SLAVEEN). When enabled, GCLK_ADC0 clock and ADC0 controls are internally routed to the ADC1 instance.

Figure 36-9. ADC Master - Slave Block Diagram

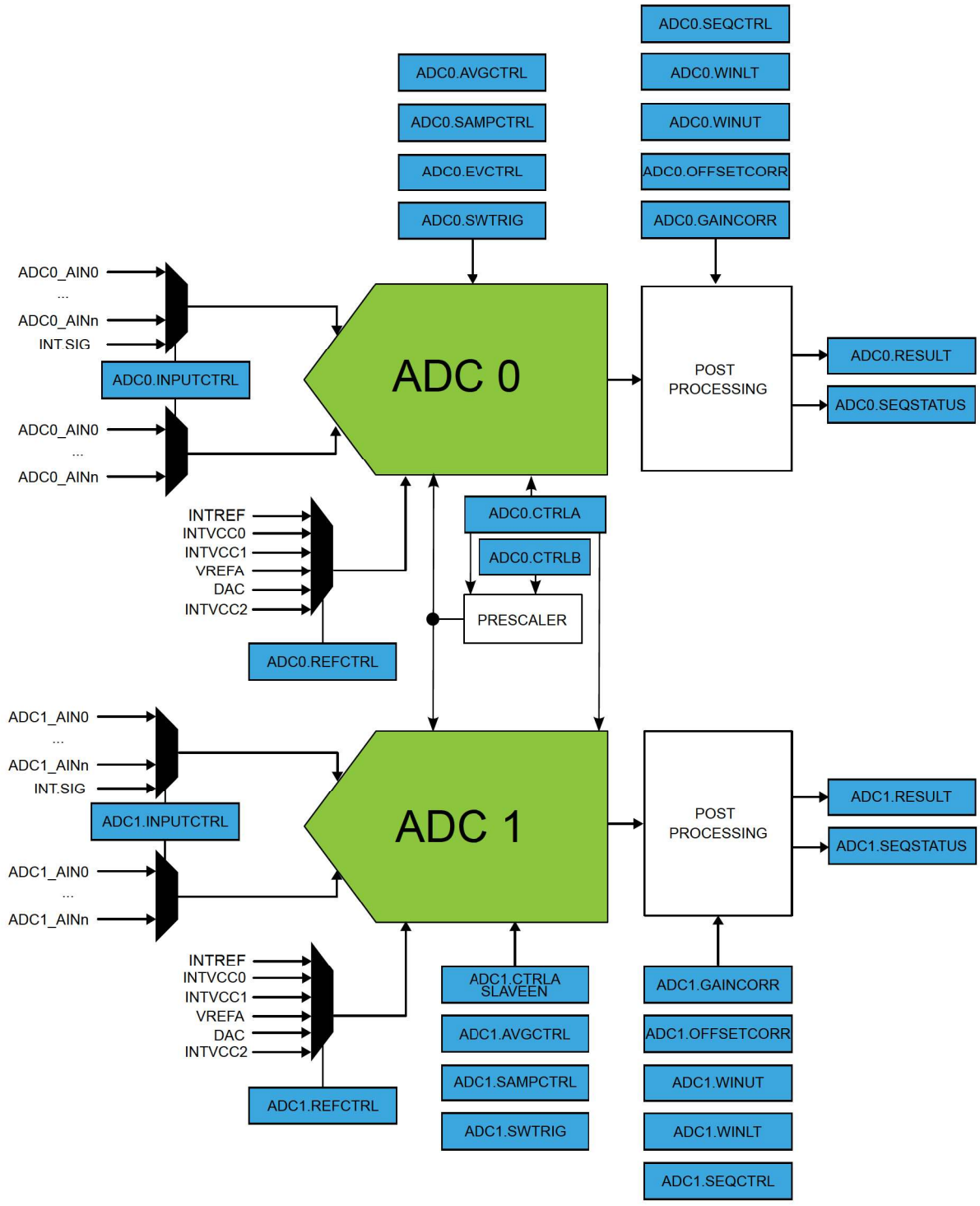

In this mode of operation, the slave ADC is enabled by accessing the CTRLA register of master ADC. In the same way, the master ADC event inputs will be automatically routed to the slave ADC, meaning that the input events configuration must be done in the master ADC (ADC0.EVCTRL).

ADC measurements can be started simultaneously on both ADC's or interleaved. The trigger mode selection is available in the master ADC Control C register (ADC0.CTRLC.DUALSEL).

To restart an interleaved sequence, the user can apply different options:

- Flush the master ADC (ADC0.SWTRIG.FLUSH = 1)
- Disable/re-enable the master ADC (ADC0.CTRLA.ENABLE)
- Reset and reconfigure master ADC (ADC0.CTRLA.SWRST = 1)

Figure 36-10. Interleaved Dual-Mode Trigger Selection

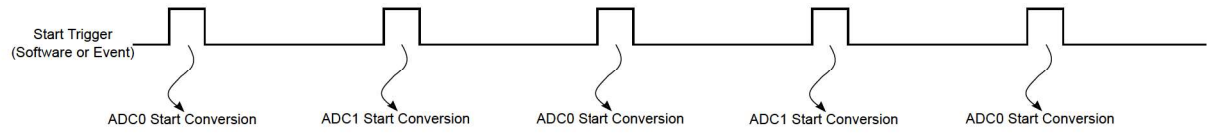

36.6.3.2 Rail-to-Rail Operation

The accuracy of the ADC is highest when the input common mode voltage (V_{CMIN}) is close to $V_{REF}/2$. To enable a full range of common mode voltages (rail-to-rail operation), the Rail-to-Rail bit in the Control C register (CTRLC.R2R) should be written to one. Rail-to-rail operation requires a sampling period of four cycles. This is achieved by enabling offset compensation (SAMPCTRL.OFFCOMP = 1). Rail-to-rail operation should not be used when offset compensation is disabled.

36.6.3.3 Double Buffering

The following registers are double buffered:

- Input Control (INPUTCTRL)
- Control C (CTRLC)
- Average Control (AVGCTRL)
- Sampling Time Control (SAMPCTRL)
- Window Monitor Lower Threshold (WINLT)
- Window Monitor Upper Threshold (WINUT)
- Gain Correction (GAINCORR)
- Offset Correction (OFFSETCORR)

When one of these registers is written, the data is stored in the corresponding buffer as long as the current conversion is not impacted, and the corresponding busy status will be set in the Synchronization Busy register (SYNCBUSY). When a new RESULT is available, data stored in the buffer registers will be transfered to the ADC and a new conversion can start.

36.6.4 DMA Operation

The ADC generates the following DMA request:

- Result Conversion Ready (RESRDY): the request is set when a conversion result is available and cleared when the RESULT register is read. When the averaging operation is enabled, the DMA request is set when the averaging is completed and result is available.

36.6.5 Interrupts

The ADC has the following interrupt sources:

- Result Conversion Ready: RESRDY
- Window Monitor: WINMON
- Overrun: OVERRUN

These interrupts, except the OVERRUN interrupt, are asynchronous wake-up sources. Refer to 16.5.3.3 Sleep Mode Controller for details.

Each interrupt source has an interrupt flag associated with it. The interrupt flag in the Interrupt Flag Status and Clear (INTFLAG) register is set when the interrupt condition occurs. Each interrupt can be individually enabled by writing a one to the corresponding bit in the Interrupt Enable Set (INTENSET) register, and disabled by writing a one to the corresponding bit in the Interrupt Enable Clear (INTENCLR) register. An interrupt request is generated when the interrupt flag is set and the corresponding interrupt is enabled. The interrupt request remains active until the interrupt flag is cleared, the interrupt is disabled, or the ADC is reset. See INTFLAG register for details on how to clear

interrupt flags. All interrupt requests from the peripheral are ORed together on system level to generate one combined interrupt request to the NVIC. Refer to 9.2 Nested Vector Interrupt Controller for details. The user must read the 13.6.3 INTFLAG register to determine which interrupt condition is present.

Note that interrupts must be globally enabled for interrupt requests to be generated. Refer to Nested Vector Interrupt Controller for details.

36.6.6 Events

The ADC can generate the following output events:

- Result Ready (RESRDY): Generated when the conversion is complete and the result is available. Refer to 36.7.4 EVCTRL for details.
- Window Monitor (WINMON): Generated when the window monitor condition match. Refer to 36.7.10 CTRLC for details.

Setting an Event Output bit in the Event Control Register (EVCTRL.xxEO=1) enables the corresponding output event. Clearing this bit disables the corresponding output event. Refer to the Event System chapter for details on configuring the event system.

The ADC can take the following actions on an input event:

- Start conversion (START): Start a conversion. Refer to 36.7.17 SWTRIG for details.
- Conversion flush (FLUSH): Flush the conversion. Refer to 36.7.17 SWTRIG for details.

Setting an Event Input bit in the Event Control register (EVCTRL.xxEI=1) enables the corresponding action on input event. Clearing this bit disables the corresponding action on input event.

The ADC uses only asynchronous events, so the asynchronous Event System channel path must be configured. By default, the ADC will detect a rising edge on the incoming event. If the ADC action must be performed on the falling edge of the incoming event, the event line must be inverted first. This is done by setting the corresponding Event Invert Enable bit in Event Control register (EVCTRL.xINV=1).

Note: If several events are connected to the ADC, the enabled action will be taken on any of the incoming events. If FLUSH and START events are available at the same time, the FLUSH event has priority.

For further information, refer to the 28. Event System (EVSYS).

36.6.7 Sleep Mode Operation

The ONDEMAND and RUNSTDBY bits in the Control A register (CTRLA) control the behavior of the ADC during Standby Sleep mode, in cases where the ADC is enabled (CTRLA.ENABLE = 1). When exiting Standby Sleep mode the software trigger bit in the Synchronization Busy register (SYNCBUSY.SWTRIG) will be '1'. After the next RESULT, start the ADC again by writing the Software Trigger Start bit (SWTRIG.START) to '1'. For further details on available options, refer to the following table.

When the device is in Standby Sleep mode, the DMA is not able to write the SWTRIG register. To write the SWTRIG register with the DMA the device must be in Active mode or in Idle Sleep mode.

Note: When CTRLA.ONDEMAND = 1, the analog block is powered off when the conversion is complete. When a start request is detected, the system returns from sleep and starts a new conversion after the start-up time delay.

Table 36-4. ADC Sleep Behavior

CTRLA.RUNSTDBY	CTRLA.ONDEMAND	CTRLA.ENABLE	Description
x	x	0	Disabled
0	0	1	Run in all sleep modes except Standby mode.
0	1	1	Run in all sleep modes on request, except Standby mode.
1	0	1	Run in all sleep modes.
1	1	1	Run in all sleep modes on request.

36.6.8 Synchronization

Due to asynchronicity between the main clock domain and the peripheral clock domains, some registers need to be synchronized when written or read.

The following bits are synchronized when written:

- Software Reset bit in Control A register (CTRLA.SWRST)
- Enable bit in Control A register (CTRLA.ENABLE)

The following registers are synchronized when written:

- Input Control register (INPUTCTRL)
- Control C register (CTRLC)
- Average control register (AVGCTRL)
- Sampling time control register (SAMPCTRL)
- Window Monitor Lower Threshold register (WINLT)
- Window Monitor Upper Threshold register (WINUT)
- Gain correction register (GAINCORR)
- Offset Correction register (OFFSETCORR)
- Software Trigger register (SWTRIG)

Required write-synchronization is denoted by the "Write-Synchronized" property in the register description.

36.7 Register Summary

Offset	Name	Bit Pos.	7	6	5	4	3	2	1	0
0x00	CTRLA	7:0	ONDEMAND	RUNSTDBY	SLAVEEN				ENABLE	SWRST
0x01	CTRLB	7:0						PRESCALER[2:0]		
0x02	REFCTRL	7:0	REFCOMP				REFSEL[3:0]			
0x03	EVCTRL	7:0			WINMONEO	RESRDYEO	STARTINV	FLUSHINV	STARTEI	FLUSHEI
0x04	INTENCLR	7:0						WINMON	OVERRUN	RESRDY
0x05	INTENSET	7:0						WINMON	OVERRUN	RESRDY
0x06	INTFLAG	7:0						WINMON	OVERRUN	RESRDY
0x07	SEQSTATUS	7:0	SEQBUSY			SEQSTATE[4:0]				
0x08	INPUTCTRL	7:0				MUXPOS[4:0]				
		15:8				MUXNEG[4:0]				
0x0A	CTRLC	7:0	R2R		RESSEL[1:0]		CORREN	FREERUN	LEFTADJ	DIFFMODE
		15:8			DUALSEL[1:0]			WINMODE[2:0]		
0x0C	AVGCTRL	7:0		ADJRES[2:0]			SAMPLENUM[3:0]			
0x0D	SAMPCTRL	7:0	OFFCOMP		SAMPLEN[5:0]					
0x0E	WINLT	7:0	WINLT[7:0]							
		15:8	WINLT[15:8]							
0x10	WINUT	7:0	WINUT[7:0]							
		15:8	WINUT[15:8]							
0x12	GAINCORR	7:0	GAINCORR[7:0]							
		15:8					GAINCORR[11:8]			
0x14	OFFSETCORR	7:0	OFFSETCORR[7:0]							
		15:8					OFFSETCORR[11:8]			
0x16 ... 0x17	Reserved									
0x18	SWTRIG	7:0							START	FLUSH
0x19 ... 0x1B	Reserved									
0x1C	DBGCTRL	7:0								DBGRUN
0x1D 0x1F	Reserved									
0x20	SYNCBUSY	7:0	WINUT	WINLT	SAMPCTRL	AVGCTRL	CTRLC	INPUTCTRL	ENABLE	SWRST
		15:8						SWTRIG	OFFSETCOR R	GAINCORR
0x22 ... 0x23	Reserved									
0x24	RESULT	7:0	RESULT[7:0]							
		15:8	RESULT[15:8]							
0x26 ... 0x27	Reserved									
0x28	SEQCTRL	7:0	SEQEN[7:0]							
		15:8	SEQEN[15:8]							
		23:16	SEQEN[23:16]							
		31:24	SEQEN[31:24]							
0x2C	CALIB	7:0						BIASCOMP[2:0]		
		15:8						BIASREFBUF[2:0]		

36.7.1 Control A

Name: CTRLA
Offset: 0x00
Reset: 0x00
Property: PAC Write-Protection, Write-Synchronized Bits

Bit	7	6	5	4	3	2	1	0
	ONDEMAND	RUNSTDBY	SLAVEEN				ENABLE	SWRST
Access	R/W	R/W	R/W				R/W	R/W
Reset	0	0	0				0	0

Bit 7 – ONDEMAND On Demand Control
The On Demand operation mode allows the ADC to be enabled or disabled, depending on other peripheral requests. In On Demand operation mode, i.e., if the ONDEMAND bit has been previously set, the ADC will only be running when requested by a peripheral. If there is no peripheral requesting the ADC will be in a disabled state.
If On Demand is disabled the ADC will always be running when enabled.
In standby sleep mode, the On Demand operation is still active if the CTRLA.RUNSTDBY bit is '1'. If CTRLA.RUNSTDBY is '0', the ADC is disabled.
Note: This bit is not synchronized.

For the slave ADC, this bit has no effect when the SLAVEEN bit is set (CTRLA.SLAVEEN= 1). ONDEMAND bit from master ADC instance will control the On Demand operation mode.

Value	Description
0	The ADC is always on , if enabled.
1	The ADC is enabled, when a peripheral is requesting the ADC conversion. The ADC is disabled if no peripheral is requesting it.

Bit 6 – RUNSTDBY Run in Standby
This bit controls how the ADC behaves during standby sleep mode.
Note: This bit is not synchronized.

For the slave ADC, this bit has no effect when the SLAVEEN bit is set (CTRLA.SLAVEEN= 1). RUNSTDBY bit from master ADC instance will control the slave ADC operation in standby sleep mode.

Value	Description
0	The ADC is halted during standby sleep mode.
1	The ADC is not stopped in standby sleep mode. If CTRLA.ONDEMAND=1, the ADC will be running when a peripheral is requesting it. If CTRLA.ONDEMAND=0, the ADC will always be running in standby sleep mode.

Bit 5 – SLAVEEN Slave Enable
This bit enables the master/slave operation and it is available only in the slave ADC instance (ADC1).
Note: This bit is not synchronized.

This bit can be set only for the slave ADC (ADC1). For the master ADC (ADC0), this bit is always read zero.

Value	Description
0	The master-slave operation is disabled.
1	The ADC1 is enabled as a slave of ADC0

Bit 1 – ENABLE Enable
Note: This bit is write-synchronized: SYNCBUSY.ENABLE must be checked to ensure the CTRLA.ENABLE.

For the slave ADC, this bit has no effect when the SLAVEEN bit is set (CTRLA.SLAVEEN= 1).

Value	Description
0	The ADC is disabled.
1	The ADC is enabled.

Bit 0 – SWRST Software Reset
Writing a '0' to this bit has no effect.
Writing a '1' to this bit resets all registers in the ADC, except DBGCTRL, to their initial state, and the ADC will be disabled.
Writing a '1' to CTRL.SWRST will always take precedence, meaning that all other writes in the same write-operation will be discarded.
Note: This bit is write-synchronized: SYNCBUSY.SWRST must be checked to ensure the CTRLA.SWRST synchronization is complete.

Value	Description
0	There is no reset operation ongoing.
1	The reset operation is ongoing.

36.7.2 Control B

Name: CTRLB
Offset: 0x01
Reset: 0x00
Property: PAC Write-Protection, Enable-Protected

Bit	7	6	5	4	3	2	1	0
						PRESCALER[2:0]		
Access						R/W	R/W	R/W
Reset						0	0	0

Bits 2:0 – PRESCALER[2:0] Prescaler Configuration
This field defines the ADC clock relative to the peripheral clock.
This field is not synchronized. For the slave ADC, these bits have no effect when the SLAVEEN bit is set (CTRLA.SLAVEEN= 1).

Value	Name	Description
0x0	DIV2	Peripheral clock divided by 2
0x1	DIV4	Peripheral clock divided by 4
0x2	DIV8	Peripheral clock divided by 8
0x3	DIV16	Peripheral clock divided by 16
0x4	DIV32	Peripheral clock divided by 32
0x5	DIV64	Peripheral clock divided by 64
0x6	DIV128	Peripheral clock divided by 128
0x7	DIV256	Peripheral clock divided by 256

36.7.3 Reference Control

Name: REFCTRL
Offset: 0x02
Reset: 0x00
Property: PAC Write-Protection, Enable-Protected

Bit	7	6	5	4	3	2	1	0
	REFCOMP				REFSEL[3:0]			
Access	R/W				R/W	R/W	R/W	R/W
Reset	0				0	0	0	0

Bit 7 – REFCOMP Reference Buffer Offset Compensation Enable
The gain error can be reduced by enabling the reference buffer offset compensation. This will increase the start-up time of the reference. When using REFCOMP and if the ADC reference selection is not using VDDANA (REFCTRL.REFSEL != INTVCC2), the first 5 conversions of the ADC must be discarded after the ADC is enabled.

Value	Description
0	Reference buffer offset compensation is disabled.
1	Reference buffer offset compensation is enabled.

Bits 3:0 – REFSEL[3:0] Reference Selection
These bits select the reference for the ADC.

Value	Name	Description
0x0	INTREF	internal reference voltage, supplied by the bandgap (refer to SUPC.VREF.SEL) for voltage level information)
x01	INTVCC0	1/1.6 VDDANA
0x2	INTVCC1	1/2 VDDANA (only for VDDANA > 4.0V)
0x3	VREFA	External reference
0x4	DAC	DAC internal output
0x5	INTVCC2	VDDANA
0x6 - 0xF		Reserved

36.7.4 Event Control

Name: EVCTRL
Offset: 0x03
Reset: 0x00
Property: PAC Write-Protection, Enable-Protected

Bit	7	6	5	4	3	2	1	0
			WINMONEO	RESRDYEO	STARTINV	FLUSHINV	STARTEI	FLUSHEI
Access			R/W	R/W	R/W	R/W	R/W	R/W
Reset			0	0	0	0	0	0

Bit 5 – WINMONEO Window Monitor Event Out
This bit indicates whether the Window Monitor event output is enabled or not and an output event will be generated when the window monitor detects something.

Value	Description
0	Window Monitor event output is disabled and an event will not be generated.
1	Window Monitor event output is enabled and an event will be generated.

Bit 4 – RESRDYEO Result Ready Event Out
This bit indicates whether the Result Ready event output is enabled or not and an output event will be generated when the conversion result is available.

Value	Description
0	Result Ready event output is disabled and an event will not be generated.
1	Result Ready event output is enabled and an event will be generated.

Bit 3 – STARTINV Start Conversion Event Invert Enable
For the slave ADC, this bit has no effect when the SLAVEEN bit is set (CTRLA.SLAVEEN= 1).

Value	Description
0	Start event input source is not inverted.
1	Start event input source is inverted.

Bit 2 – FLUSHINV Flush Event Invert Enable
For the slave ADC, this bit has no effect when the SLAVEEN bit is set (CTRLA.SLAVEEN= 1).

Value	Description
0	Flush event input source is not inverted.
1	Flush event input source is inverted.

Bit 1 – STARTEI Start Conversion Event Input Enable
For the slave ADC, this bit has no effect when the SLAVEEN bit is set (CTRLA.SLAVEEN= 1).

Value	Description
0	A new conversion will not be triggered on any incoming event.
1	A new conversion will be triggered on any incoming event.

Bit 0 – FLUSHEI Flush Event Input Enable
For the slave ADC, this bit has no effect when the SLAVEEN bit is set (CTRLA.SLAVEEN= 1).

Value	Description
0	A flush and new conversion will not be triggered on any incoming event.
1	A flush and new conversion will be triggered on any incoming event.

36.7.5 Interrupt Enable Clear

Name: INTENCLR
Offset: 0x04
Reset: 0x00
Property: PAC Write-Protection

This register allows the user to disable an interrupt without doing a read-modify-write operation. Changes in this register will also be reflected in the Interrupt Enable Set (INTENSET) register.

Bit	7	6	5	4	3	2	1	0
						WINMON	OVERRUN	RESRDY
Access						R/W	R/W	R/W
Reset						0	0	0

Bit 2 – WINMON Window Monitor Interrupt Enable
Writing a '0' to this bit has no effect.
Writing a '1' to this bit will clear the Window Monitor Interrupt Enable bit, which disables the corresponding interrupt request.

Value	Description
0	The window monitor interrupt is disabled.
1	The window monitor interrupt is enabled, and an interrupt request will be generated when the Window Monitor interrupt flag is set.

Bit 1 – OVERRUN Overrun Interrupt Enable
Writing a '0' to this bit has no effect.
Writing a '1' to this bit will clear the Overrun Interrupt Enable bit, which disables the corresponding interrupt request.

Value	Description
0	The Overrun interrupt is disabled.
1	The Overrun interrupt is enabled, and an interrupt request will be generated when the Overrun interrupt flag is set.

Bit 0 – RESRDY Result Ready Interrupt Enable
Writing a '0' to this bit has no effect.
Writing a '1' to this bit will clear the Result Ready Interrupt Enable bit, which disables the corresponding interrupt request.

Value	Description
0	The Result Ready interrupt is disabled.
1	The Result Ready interrupt is enabled, and an interrupt request will be generated when the Result Ready interrupt flag is set.

36.7.6 Interrupt Enable Set

Name: INTENSET
Offset: 0x05
Reset: 0x00
Property: PAC Write-Protection

This register allows the user to enable an interrupt without doing a read-modify-write operation. Changes in this register will also be reflected in the Interrupt Enable Clear (INTENCLR) register.

Bit	7	6	5	4	3	2	1	0
						WINMON	OVERRUN	RESRDY
Access						R/W	R/W	R/W
Reset						0	0	0

Bit 2 – WINMON Window Monitor Interrupt Enable
Writing a '0' to this bit has no effect.
Writing a '1' to this bit will set the Window Monitor Interrupt bit, which enables the Window Monitor interrupt.

Value	Description
0	The Window Monitor interrupt is disabled.
1	The Window Monitor interrupt is enabled.

Bit 1 – OVERRUN Overrun Interrupt Enable
Writing a '0' to this bit has no effect.
Writing a '1' to this bit will set the Overrun Interrupt bit, which enables the Overrun interrupt.

Value	Description
0	The Overrun interrupt is disabled.
1	The Overrun interrupt is enabled.

Bit 0 – RESRDY Result Ready Interrupt Enable
Writing a '0' to this bit has no effect.
Writing a '1' to this bit will set the Result Ready Interrupt bit, which enables the Result Ready interrupt.

Value	Description
0	The Result Ready interrupt is disabled.
1	The Result Ready interrupt is enabled.

36.7.7 Interrupt Flag Status and Clear

Name: INTFLAG
Offset: 0x06
Reset: 0x00
Property: –

Bit	7	6	5	4	3	2	1	0
						WINMON	OVERRUN	RESRDY
Access						R/W	R/W	R/W
Reset						0	0	0

Bit 2 – WINMON Window Monitor
This flag is cleared by writing a '1' to the flag or by reading the RESULT register.
This flag is set on the next GCLK_ADC cycle after a match with the window monitor condition, and an interrupt request will be generated if INTENCLR/SET.WINMON is '1'.
Writing a '0' to this bit has no effect.
Writing a '1' to this bit clears the Window Monitor interrupt flag.

Bit 1 – OVERRUN Overrun
This flag is cleared by writing a '1' to the flag.
This flag is set if RESULT is written before the previous value has been read by CPU, and an interrupt request will be generated if INTENCLR/SET.OVERRUN=1.
Writing a '0' to this bit has no effect.
Writing a '1' to this bit clears the Overrun interrupt flag.

Bit 0 – RESRDY Result Ready
This flag is cleared by writing a '1' to the flag or by reading the RESULT register.
This flag is set when the conversion result is available, and an interrupt will be generated if INTENCLR/SET.RESRDY=1.
Writing a '0' to this bit has no effect.
Writing a '1' to this bit clears the Result Ready interrupt flag.

36.7.8 Sequence Status

Name: SEQSTATUS
Offset: 0x07
Reset: 0x00
Property: -

Bit	7	6	5	4	3	2	1	0
	SEQBUSY			SEQSTATE[4:0]				
Access	R			R	R	R	R	R
Reset	0			0	0	0	0	0

Bit 7 – SEQBUSY Sequence busy
This bit is set when the sequence start.
This bit is clear when the last conversion in a sequence is done.

Bits 4:0 – SEQSTATE[4:0] Sequence State
These bit fields are the pointer of sequence. This value identifies the last conversion done in the sequence.

36.7.9 Input Control

Name: INPUTCTRL
Offset: 0x08
Reset: 0x0000
Property: PAC Write-Protection, Write-Synchronized

Note: This register is write-synchronized: SYNCBUSY.INPUTCTRL must be checked to ensure the INPUTCTRL register synchronization is complete.

Bit	15	14	13	12	11	10	9	8
				MUXNEG[4:0]				
Access				R/W	R/W	R/W	R/W	R/W
Reset				0	0	0	0	0

Bit	7	6	5	4	3	2	1	0
				MUXPOS[4:0]				
Access				R/W	R/W	R/W	R/W	R/W
Reset				0	0	0	0	0

Bits 12:8 – MUXNEG[4:0] Negative MUX Input Selection
These bits define the MUX selection for the negative ADC input.

Value	Name	Description
0x00	AIN0	ADC AIN0 pin
0x01	AIN1	ADC AIN1 pin
0x02	AIN2	ADC AIN2 pin
0x03	AIN3	ADC AIN3 pin
0x04	AIN4	ADC AIN4 pin
0x05	AIN5	ADC AIN5 pin
0x06 0x17	-	Reserved
0x18	GND	Internal ground
0x19 - 0x1F	-	Reserved

Bits 4:0 – MUXPOS[4:0] Positive MUX Input Selection
These bits define the MUX selection for the positive ADC input. If the internal INTREF voltage input channel is selected, then the Sampling Time Length bit group in the Sampling Control register must be written with a corresponding value.

Value	Name	Description
0x00	AIN0	ADC AIN0 pin
0x01	AIN1	ADC AIN1 pin
0x02	AIN2	ADC AIN2 pin
0x03	AIN3	ADC AIN3 pin
0x04	AIN4	ADC AIN4 pin
0x05	AIN5	ADC AIN5 pin
0x06	AIN6	ADC AIN6 pin
0x07	AIN7	ADC AIN7 pin
0x08	AIN8	ADC AIN8 pin
0x09	AIN9	ADC AIN9 pin
0x0A	AIN10	ADC AIN10 pin
0x0B	AIN11	ADC AIN11 pin
0xC - 0x18	-	Reserved
0x19	INTREF	Internal voltage reference, supplied by the bandgap (refer to SUPC.VREF.SEL for voltage level information)
0x1A	SCALEDVDDCORE	1/4 Scaled VDDCORE Supply

Value	Name	Description
0x1B	SCALEDVDDANA	1/4 Scaled VDDANA Supply
0x1C	-	Reserved
0x1D	-	Reserved
0x1E	-	Reserved
0x1F	-	Reserved

36.7.10 Control C

Name: CTRLC
Offset: 0x0A
Reset: 0x0000
Property: PAC Write-Protection, Write-Synchronized

Note: This register is write-synchronized: SYNCBUSY.CTRLC must be checked to ensure the CTRLC register synchronization is complete.

Bit	15	14	13	12	11	10	9	8
			DUALSEL[1:0]			WINMODE[2:0]		
Access			R/W	R/W		R/W	R/W	R/W
Reset			0	0		0	0	0

Bit	7	6	5	4	3	2	1	0
	R2R		RESSEL[1:0]		CORREN	FREERUN	LEFTADJ	DIFFMODE
Access	R/W		R/W	R/W	R/W	R/W	R/W	R/W
Reset	0		0	0	0	0	0	0

Bits 13:12 – DUALSEL[1:0] Dual Mode Trigger Selection
These bits define the trigger mode. These bits are available in the master ADC and have no effect if the master-slave operation is disabled (ADC1.CTRLA.SLAVEEN=0).

Value	Name	Description
0x0	BOTH	Start event or software trigger will start a conversion on both ADCs.
0x1	INTERLEAVE	Start event or software trigger will alternatively start a conversion on ADC0 and ADC1.
0x2 – 0x3	-	Reserved

Bits 10:8 – WINMODE[2:0] Window Monitor Mode
These bits enable and define the window monitor mode.

Value	Name	Description
0x0	DISABLE	No window mode (default)
0x1	MODE1	RESULT > WINLT
0x2	MODE2	RESULT < WINUT
0x3	MODE3	WINLT < RESULT < WINUT
0x4	MODE4	WINUT < RESULT < WINLT
0x5 – 0x7		Reserved

Bit 7 – R2R Rail-to-Rail Operation

Value	Description
0	Disable rail-to-rail operation.
1	Enable rail-to-rail operation to increase the allowable range of the input common mode voltage (V_{CMIN}). When R2R is one, a sampling period of four cycles is required. Offset compensation (SAMPCTRL.OFFCOMP) must be written to one when using this period.

Bits 5:4 – RESSEL[1:0] Conversion Result Resolution
These bits define whether the ADC completes the conversion 12-, 10- or 8-bit result resolution.

Value	Name	Description
0x0	12BIT	12-bit result
0x1	16BIT	Accumulation or Oversampling and Decimation modes
0x2	10BIT	10-bit result
0x3	8BIT	8-bit result

Bit 3 – CORREN Digital Correction Logic Enabled

Value	Description
0	Disable the digital result correction.
1	Enable the digital result correction. The ADC conversion result in the RESULT register is then corrected for gain and offset based on the values in the GAINCORR and OFFSETCORR registers. Conversion time will be increased by 13 cycles according to the value in the Offset Correction Value bit group in the Offset Correction register.

Bit 2 – FREERUN Free Running Mode

Value	Description
0	The ADC run in single conversion mode.
1	The ADC is in free running mode and a new conversion will be initiated when a previous conversion completes.

Bit 1 – LEFTADJ Left-Adjusted Result

Value	Description
0	The ADC conversion result is right-adjusted in the RESULT register.
1	The ADC conversion result is left-adjusted in the RESULT register. The high byte of the 12-bit result will be present in the upper part of the result register.

Bit 0 – DIFFMODE Differential Mode

Value	Description
0	The ADC is running in singled-ended mode.
1	The ADC is running in differential mode. In this mode, the voltage difference between the MUXPOS and MUXNEG inputs will be converted by the ADC.

36.7.11 Average Control

Name: AVGCTRL
Offset: 0x0C
Reset: 0x00
Property: PAC Write-Protection, Write-Synchronized

Note: This register is write-synchronized: SYNCBUSY.AVGCTRL must be checked to ensure the AVGCTRL register synchronization is complete.

Bit	7	6	5	4	3	2	1	0
		ADJRES[2:0]			SAMPLENUM[3:0]			
Access		R/W	R/W	R/W	R/W	R/W	R/W	R/W
Reset		0	0	0	0	0	0	0

Bits 6:4 – ADJRES[2:0] Adjusting Result / Division Coefficient
These bits define the division coefficient in 2n steps.

Bits 3:0 – SAMPLENUM[3:0] Number of Samples to be Collected
These bits define how many samples are added together. The result will be available in the Result register (RESULT). Note: if the result width increases, CTRLC.RESSEL must be changed.

Value	Description
0x0	1 sample
0x1	2 samples
0x2	4 samples
0x3	8 samples
0x4	16 samples
0x5	32 samples
0x6	64 samples
0x7	128 samples
0x8	256 samples
0x9	512 samples
0xA	1024 samples
0xB - 0xF	Reserved

36.7.12 Sampling Time Control

Name: SAMPCTRL
Offset: 0x0D
Reset: 0x00
Property: PAC Write-Protection, Write-Synchronized

Note: This register is write-synchronized: SYNCBUSY.SAMPCTRL must be checked to ensure the SAMPCTRL register synchronization is complete.

Bit	7	6	5	4	3	2	1	0
	OFFCOMP		SAMPLEN[5:0]					
Access	R/W		R/W	R/W	R/W	R/W	R/W	R/W
Reset	0		0	0	0	0	0	0

Bit 7 – OFFCOMP Comparator Offset Compensation Enable
Setting this bit enables the offset compensation for each sampling period to ensure low offset and immunity to temperature or voltage drift. This compensation increases the sampling time by three clock cycles that results in a fixed sampling duration of 4 CLK_ADC cycles.
This bit must be set to zero to validate the SAMPLEN value. It's not possible to use OFFCOMP=1 and SAMPLEN>0.

Bits 5:0 – SAMPLEN[5:0] Sampling Time Length
These bits control the ADC sampling time in number of CLK_ADC cycles, depending of the prescaler value, thus controlling the ADC input impedance. Sampling time is set according to the equation:
$\text{Sampling time} = (\text{SAMPLEN}+1) \cdot (\text{CLK}_{\text{ADC}})$

36.7.13 Window Monitor Lower Threshold

Name: WINLT
Offset: 0x0E
Reset: 0x0000
Property: PAC Write-Protection, Write-Synchronized

Note: This register is write-synchronized: SYNCBUSY.WINLT must be checked to ensure the WINLT register synchronization is complete.

Bit	15	14	13	12	11	10	9	8
	WINLT[15:8]							
Access	R/W	R/W	R/W	R/W	R/W	R/W	R/W	R/W
Reset	0	0	0	0	0	0	0	0

Bit	7	6	5	4	3	2	1	0
	WINLT[7:0]							
Access	R/W	R/W	R/W	R/W	R/W	R/W	R/W	R/W
Reset	0	0	0	0	0	0	0	0

Bits 15:0 – WINLT[15:0] Window Lower Threshold
If the window monitor is enabled (CTRLC.WINMODE != 0), these bits define the lower threshold value.

36.7.14 Window Monitor Upper Threshold

Name: WINUT
Offset: 0x10
Reset: 0x0000
Property: PAV Write-Protection, Write-Synchronized

Note: This register is write-synchronized: SYNCBUSY.WINUT must be checked to ensure the WINUT register synchronization is complete.

Bit	15	14	13	12	11	10	9	8
	WINUT[15:8]							
Access	R/W	R/W	R/W	R/W	R/W	R/W	R/W	R/W
Reset	0	0	0	0	0	0	0	0

Bit	7	6	5	4	3	2	1	0
	WINUT[7:0]							
Access	R/W	R/W	R/W	R/W	R/W	R/W	R/W	R/W
Reset	0	0	0	0	0	0	0	0

Bits 15:0 – WINUT[15:0] Window Upper Threshold
If the window monitor is enabled (CTRLC.WINMODE != 0), these bits define the upper threshold value.

36.7.15 Gain Correction

Name: GAINCORR
Offset: 0x12
Reset: 0x0000
Property: PAC Write-Protection, Write-Synchronized

Note: This register is write-synchronized: SYNCBUSY.GAINCORR must be checked to ensure the GAINCORR register synchronization is complete.

Bit	15	14	13	12	11	10	9	8
					GAINCORR[11:8]			
Access					R/W	R/W	R/W	R/W
Reset					0	0	0	0

Bit	7	6	5	4	3	2	1	0
	GAINCORR[7:0]							
Access	R/W	R/W	R/W	R/W	R/W	R/W	R/W	R/W
Reset	0	0	0	0	0	0	0	0

Bits 11:0 – GAINCORR[11:0] Gain Correction Value
If CTRLC.CORREN=1, these bits define how the ADC conversion result is compensated for gain error before being written to the result register. The gain correction is a fractional value, a 1-bit integer plus an 11-bit fraction, and therefore ½ <= GAINCORR < 2. GAINCORR values range from 0.10000000000 to 1.11111111111.

36.7.16 Offset Correction

Name: OFFSETCORR
Offset: 0x14
Reset: 0x0000
Property: PAC Write-Protection, Write-Synchronized

Note: This register is write-synchronized: SYNCBUSY.OFFSETCORR must be checked to ensure the OFFSETCORR register synchronization is complete.

Bit	15	14	13	12	11	10	9	8
					OFFSETCORR[11:8]			
Access					R/W	R/W	R/W	R/W
Reset					0	0	0	0

Bit	7	6	5	4	3	2	1	0
	OFFSETCORR[7:0]							
Access	R/W	R/W	R/W	R/W	R/W	R/W	R/W	R/W
Reset	0	0	0	0	0	0	0	0

Bits 11:0 – OFFSETCORR[11:0] Offset Correction Value
If CTRLC.CORREN=1, these bits define how the ADC conversion result is compensated for offset error before being written to the Result register. This OFFSETCORR value is in two's complement format. Offset correction should not be used for 8-bit and 10-bit conversion resolution.

36.7.17 Software Trigger

Name: SWTRIG
Offset: 0x18
Reset: 0x00
Property: PAC Write-Protection, Write-Synchronized

Note: This register is write-synchronized: SYNCBUSY.SWTRIG must be checked to ensure the SWTRIG register synchronization is complete.

Bit	7	6	5	4	3	2	1	0
							START	FLUSH
Access							W	W
Reset							0	0

Bit 1 – START ADC Start Conversion
Writing a '1' to this bit will start a conversion or sequence. The bit is cleared by hardware when the conversion has started. Writing a '1' to this bit when it is already set has no effect.
Writing a '0' to this bit will have no effect.

Bit 0 – FLUSH ADC Conversion Flush
Writing a '1' to this bit will flush the ADC pipeline. A flush will restart the ADC clock on the next peripheral clock edge, and all conversions in progress will be aborted and lost. This bit is cleared until the ADC has been flushed.
After the flush, the ADC will resume where it left off; i.e., if a conversion was pending, the ADC will start a new conversion.
Writing this bit to '0' will have no effect.

36.7.18 Debug Control

Name: DBGCTRL
Offset: 0x1C
Reset: 0x00
Property: PAC Write-Protection

Bit	7	6	5	4	3	2	1	0
								DBGRUN
Access								R/W
Reset								0

Bit 0 – DBGRUN Debug Run
This bit is reset by a system software reset.
This bit controls the functionality when the CPU is halted by an external debugger.
This bit should be written only while a conversion is not ongoing.

Value	Description
0	The ADC is halted when the CPU is halted by an external debugger.
1	The ADC continues normal operation when the CPU is halted by an external debugger.

36.7.19 Synchronization Busy

Name: SYNCBUSY
Offset: 0x20
Reset: 0x0000
Property: -

Bit	15	14	13	12	11	10	9	8
						SWTRIG	OFFSETCORR	GAINCORR
Access						R	R	R
Reset						0	0	0

Bit	7	6	5	4	3	2	1	0
	WINUT	WINLT	SAMPCTRL	AVGCTRL	CTRLC	INPUTCTRL	ENABLE	SWRST
Access	R	R	R	R	R	R	R	R
Reset	0	0	0	0	0	0	0	0

Bit 10 – SWTRIG Software Trigger Synchronization Busy
This bit is cleared when the synchronization of SWTRIG register between the clock domains is complete.
This bit is set when the synchronization of SWTRIG register between clock domains is started.

Bit 9 – OFFSETCORR Offset Correction Synchronization Busy
This bit is cleared when the synchronization of OFFSETCORR register between the clock domains is complete.
This bit is set when the synchronization of OFFSETCORR register between clock domains is started.

Bit 8 – GAINCORR Gain Correction Synchronization Busy
This bit is cleared when the synchronization of GAINCORR register between the clock domains is complete.
This bit is set when the synchronization of GAINCORR register between clock domains is started.

Bit 7 – WINUT Window Monitor Lower Threshold Synchronization Busy
This bit is cleared when the synchronization of WINUT register between the clock domains is complete.
This bit is set when the synchronization of WINUT register between clock domains is started.

Bit 6 – WINLT Window Monitor Upper Threshold Synchronization Busy
This bit is cleared when the synchronization of WINLT register between the clock domains is complete.
This bit is set when the synchronization of WINLT register between clock domains is started.

Bit 5 – SAMPCTRL Sampling Time Control Synchronization Busy
This bit is cleared when the synchronization of SAMPCTRL register between the clock domains is complete.
This bit is set when the synchronization of SAMPCTRL register between clock domains is started.

Bit 4 – AVGCTRL Average Control Synchronization Busy
This bit is cleared when the synchronization of AVGCTRL register between the clock domains is complete.
This bit is set when the synchronization of AVGCTRL register between clock domains is started.

Bit 3 – CTRLC Control C Synchronization Busy
This bit is cleared when the synchronization of CTRLC register between the clock domains is complete.
This bit is set when the synchronization of CTRLC register between clock domains is started.

Bit 2 – INPUTCTRL Input Control Synchronization Busy
This bit is cleared when the synchronization of INPUTCTRL register between the clock domains is complete.
This bit is set when the synchronization of INPUTCTRL register between clock domains is started.

Bit 1 – ENABLE ENABLE Synchronization Busy
This bit is cleared when the synchronization of ENABLE register between the clock domains is complete.
This bit is set when the synchronization of ENABLE register between clock domains is started.

Bit 0 – SWRST SWRST Synchronization Busy
This bit is cleared when the synchronization of SWRST register between the clock domains is complete.
This bit is set when the synchronization of SWRST register between clock domains is started

36.7.20 Result

Name: RESULT
Offset: 0x24
Reset: 0x0000
Property: -

Bit	15	14	13	12	11	10	9	8
	RESULT[15:8]							
Access	R	R	R	R	R	R	R	R
Reset	0	0	0	0	0	0	0	0

Bit	7	6	5	4	3	2	1	0
	RESULT[7:0]							
Access	R	R	R	R	R	R	R	R
Reset	0	0	0	0	0	0	0	0

Bits 15:0 – RESULT[15:0] Result Conversion Value
These bits will hold up to a 16-bit ADC conversion result, depending on the configuration.
In single conversion mode without averaging, the ADC conversion will produce a 12-bit result, which can be left- or right-shifted, depending on the setting of CTRLC.LEFTADJ.
If the result is left-adjusted (CTRLC.LEFTADJ = 1), the high byte of the result will be in bit position [15:8], while the remaining 4 bits of the result will be placed in bit locations [7:4]. This can be used only if an 8-bit result is needed; i.e., one can read only the high byte of the entire 16-bit register.
If the result is not left-adjusted (CTRLC.LEFTADJ = 0) and no oversampling is used, the result will be available in bit locations [11:0], and the result is then 12 bits long. If oversampling is used, the result will be located in bit locations [15:0], depending on the settings of the Average Control register.

36.7.21 Sequence Control

Name: SEQCTRL
Offset: 0x28
Reset: 0x00000000
Property: PAC Write-Protection

Bit	31	30	29	28	27	26	25	24
	SEQEN[31:24]							
Access	R/W	R/W	R/W	R/W	R/W	R/W	R/W	R/W
Reset	0	0	0	0	0	0	0	0

Bit	23	22	21	20	19	18	17	16
	SEQEN[23:16]							
Access	R/W	R/W	R/W	R/W	R/W	R/W	R/W	R/W
Reset	0	0	0	0	0	0	0	0

Bit	15	14	13	12	11	10	9	8
	SEQEN[15:8]							
Access	R/W	R/W	R/W	R/W	R/W	R/W	R/W	R/W
Reset	0	0	0	0	0	0	0	0

Bit	7	6	5	4	3	2	1	0
	SEQEN[7:0]							
Access	R/W	R/W	R/W	R/W	R/W	R/W	R/W	R/W
Reset	0	0	0	0	0	0	0	0

Bits 31:0 – SEQEN[31:0] Enable Positive Input in the Sequence
For details on available positive mux selection, refer to INPUTCTRL.MUXPOS.
The sequence starts from the lowest input, and goes to the next enabled input automatically when the conversion is done. If no bits are set the sequence is disabled.

Value	Description
0	Disable the positive input mux n selection from the sequence.
1	Enable the positive input mux n selection to the sequence.

36.7.22 Calibration

Name: CALIB
Offset: 0x2C
Reset: 0x0000
Property: PAC Write-Protection, Enable-Protected

Bit	15	14	13	12	11	10	9	8
						BIASREFBUF[2:0]		
Access						R/W	R/W	R/W
Reset						0	0	0

Bit	7	6	5	4	3	2	1	0
						BIASCOMP[2:0]		
Access						R/W	R/W	R/W
Reset						0	0	0

Bits 10:8 – BIASREFBUF[2:0] Bias Reference Buffer Scaling
This value from production test must be loaded from the NVM software calibration row into the CALIB register by software to achieve the specified accuracy. For further information, refer to the 8.4 NVM Software Calibration Area Mapping.
The value must be copied only, and must not be changed.

Bits 2:0 – BIASCOMP[2:0] Bias Comparator Scaling
This value from production test must be loaded from the NVM software calibration row into the CALIB register by software to achieve the specified accuracy.
The value must be copied only, and must not be changed

37. Sigma-Delta Analog-to-Digital Converter (SDADC)

37.1 Overview

The Sigma-Delta Analog-to-Digital Converter (SDADC) converts analog signals to digital values. The SDADC has 16-bit resolution, and is capable of converting up to 1.5 Msps divided by the data over sampling ratio (OSR). The input selection is up to three differential analog channels. The SDADC provides signed results.

SDADC measurements can be started by either application software or an incoming event from another peripheral in the device. SDADC measurements can be started with predictable timing and without software intervention.

The SDADC also integrates Sleep mode and a conversion sequencer. These features reduce power consumption and processor intervention.

A set of reference voltages is generated internally.

37.2 Features

- 16-bit resolution
- Up to 1,500,000 divided by Over Sampling Ratio (OSR) samples per second
- Three analog differential inputs
  - Up to 2 external analog differential pairs.
- Conversion Range:
  - Differential mode: $-V_{REF}$ to $+V_{REF}$
- Event-triggered conversion (one event input)
- Optional DMA transfer of conversion settings or result
- Single, continuous, and sequencing options
- Hardware gain, offset, and shift compensation
- Windowing monitor
- Chopper mode (offset reduction)

37.3 Block Diagram

Figure 37-1. SDADC Block Diagram.

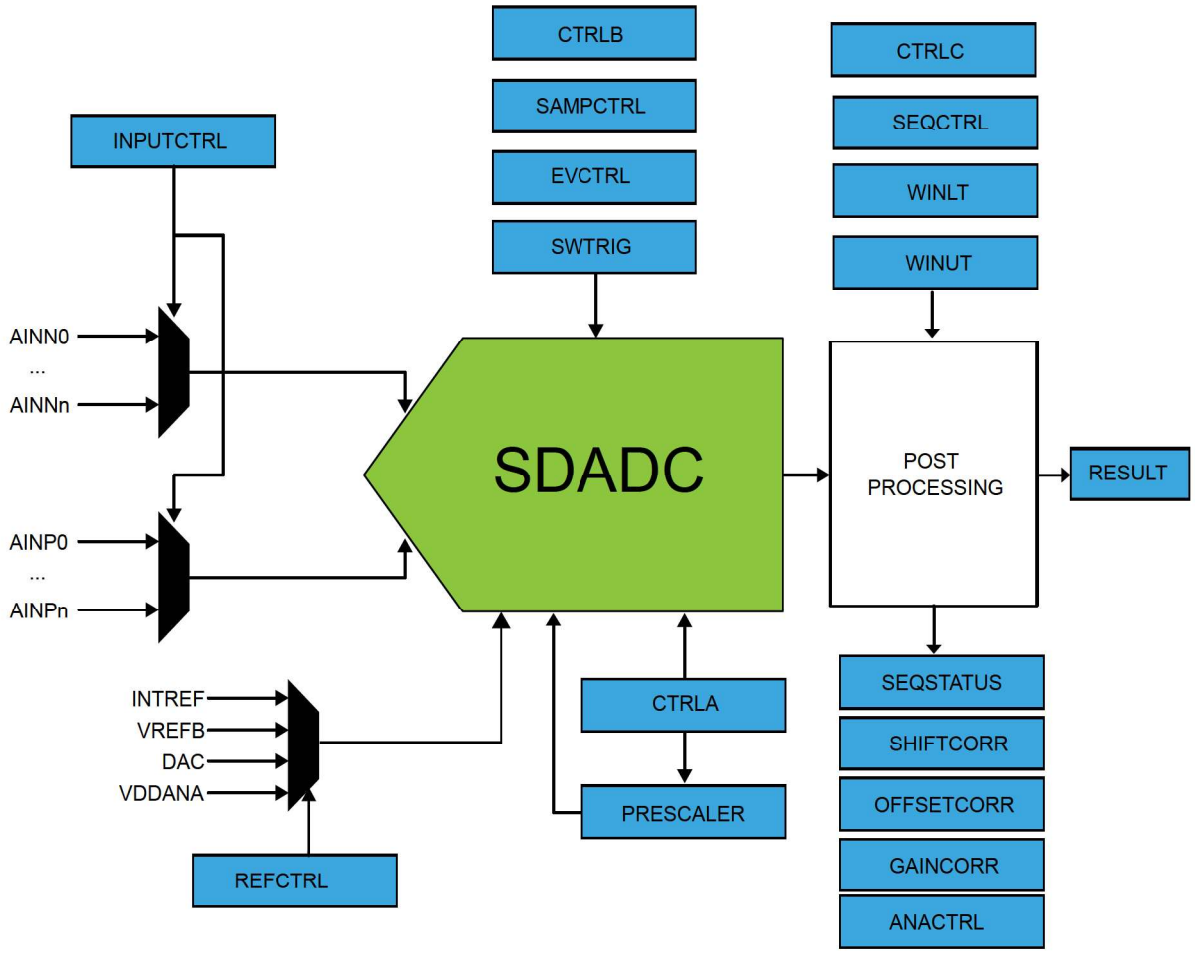

37.4 Signal Description

One signal can be mapped on several pins.

Signal	Description	Type
VREF	Analog input	External reference voltage
AINN0	Analog input	Analog input channel
AINP0	Analog input	Analog input channel
AINN1	Analog input	Analog input channel
AINP1	Analog input	Analog input channel

37.5 Peripheral Dependencies

Peripheral	Base Address	IRQ	AHB CLK	APB CLK	Generic CLK	PAC		Events		DMA	Sleep Walking
			Enabled at reset	Enabled at reset	Index	Index	Prot at reset	User	Generator	Index	
SDADC	0x42004C00	25	-	N	30	19	N	32: START 33: FLUSH	71: RESRDY 72: WINMON	38: RESRDY	Y

37.6 Functional Description

37.6.1 Principle of Operation

The SDADC converts analog signals to digital values. The SDADC has 16-bit resolution, and is capable of converting up to 1.5 Msps divided by the OSR data over sampling ratio. The input selection is up to three input analog channels. The SDADC provides unsigned results.

37.6.2 Basic Operation

37.6.2.1 Initialization

The following registers are enable-protected, meaning that they can only be written when the SDADC is disabled (CTRLA.ENABLE is zero):

- CTRLA ONEDEMAND and RUNSTDBY bits
- CTRLB
- CTRLC
- EVCTRL
- ANACTRL

Enable-protection is denoted by the Enable-Protected property in the register description.

37.6.2.2 Enabling, Disabling and Resetting

The SDADC is enabled by writing a one to the Enable bit in the Control A register (CTRLA.ENABLE). The SDADC is disabled by writing a zero to CTRLA.ENABLE.

The SDADC is reset by writing a one to the Software Reset bit in the Control A register (CTRLA.SWRST). All registers in the ADC will be reset to their initial state, and the SDADC will be disabled. Refer to 37.7.1 CTRLA for details.

37.6.2.3 Operation

In the most basic configuration, the SDADC sample values from the configured external sources (input ctrl register). The rate of the conversion depends on the combination of the GCLK_SDADC frequency, the clock prescaler from CTRLB.PRESCALER and the Over Sampling Ratio from CTRLB.OSR.

To convert analog values to digital values, the SDADC needs to be initialized first, as described in 37.6.2.1 Initialization . Data conversion can be started either manually, by writing a one to the Start bit in the Software Trigger register (SWTRIG.START), or automatically, by configuring an automatic trigger to initiate the conversions. A free-running mode could be used to continuously convert an input channel. There is no need for a trigger to start the conversion. It will start automatically at the end of previous conversion.

The first valid sample starts from the third sample onward. It can skip the first few samples by programming the SKPCNT[3:0] in CTRLB register. The result of the conversion is stored in the Result register (RESULT) overwriting the result from the previous conversion.

To avoid data loss the conversion result must be read as soon as it is available (INTFLAG.RESRDY). Failing to do so will result in an overrun error condition, indicated by the OVERRUN bit in the Interrupt Flag Status and Clear register (INTFLAG.OVERRUN).

To use an interrupt handler, the corresponding bit in the Interrupt Enable Set register (INTENSET) must be written to one.

37.6.2.4 Conversion Reference

The conversion is performed on a full range between 0V and the reference voltage. Analog inputs between these voltages convert to values based on a linear conversion.

37.6.2.5 Prescaler Selection

The SDADC is clocked by GCLK_SDADC. There is also a prescaler in the SDADC to enable conversion at lower clock rates.

Refer to 37.7.3 CTRLB for details on prescaler settings.

Figure 37-2. SDADC Prescaler Diagram.

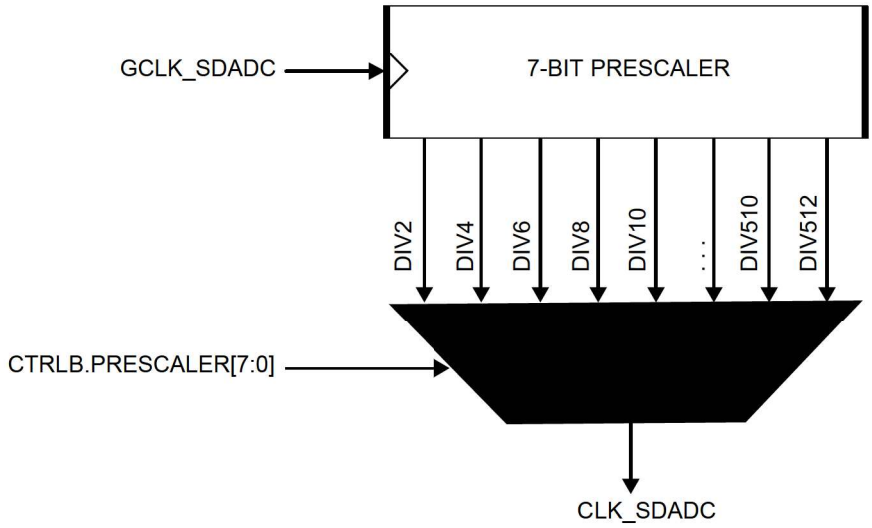

37.6.2.6 SDADC Resolution

The SDADC provides 16-bit resolution.

37.6.2.7 Automatic Sequences

The SDADC has the ability to automatically sequence a series of conversion. This means that each time the SDADC receives a start-of-conversion request, it can perform multiple conversions automatically. All of the three inputs can be included in a sequence, by writing to the Sequence Control register (SEQCTRL). The order of the conversion in a sequence is the lower positive input pair selection to upper positive input pair (AINN0, AINP0, AINN1, AINP1 ...).

When a sequence starts, the Sequence Busy status bit in Sequence Status register (SEQSTATUS.SEQBUSY) will be set to one. When the sequence is complete, the Sequence Busy status bit will be cleared.

Each time a conversion is completed, the Sequence State status in Sequence Status register (SEQSTATUS.SEQSTATE) will store the input number from which the conversion is done. The result will be stored in RESULT register and the Result Ready Interrupt Flag (INTFLAG.RESRDY) is set.

If additional inputs must be scanned, the SDADC will automatically start a new conversion on the next input present in the sequence list.

Note that if SEQCTRL register has no bits set to one, the conversion is done with the selected INPUTCTRL input.

37.6.2.8 Window Monitor

The window monitor feature allows the conversion result in the RESULT register to be compared to predefined threshold values. The window mode is selected by writing the Window Monitor Mode bits in the Window Monitor Control register (WINCTRL.WINMODE). Threshold values must be written in the Window Monitor Lower Threshold register (WINLT) and Window Monitor Upper Threshold register (WINUT).

The INTFLAG.WINMON interrupt flag will be set if the conversion result matches the window monitor condition.

37.6.3 Cascaded Integrator-Comb (CIC) Decimation Filter

37.6.3.1 Description

The Analog-to-Digital Converter filters and decimates the sigma-delta ADC output bitstream. Its output is defined on 16bits unsigned format with the following programmable output rates: CLK_SDADC_FS/64, CLK_SDADC_FS/128, CLK_SDADC_FS/256, CLK_SDADC_FS/512 and CLK_SDADC_FS/1024, where CLK_SDADC_FS is the sigma-delta ADC's sampling frequency: CLK_SDADC_FS = CLK_SDADC_PRESCALER/4, the reduction comes from the phase generator between the prescaler and the SDADC.

The filtering and the decimation is performed by a SINC-based filter whose zeros are placed in order to minimize aliasing effects of the decimation.

37.6.3.2 Decimation Filter

The sigma-delta architecture of the SDADC implies a filtering and a decimation of the bitstream at the output of the SDADC. The decimation filter decimates the bitstream by 64, 128 or 256, 512, 1024. To perform the decimation operation, a 3rd order SINC filter with programmable Over Sampling Ratio is implemented with the following transfer function:

$$H(z) = \frac{1}{OSR^3}\left(\sum_{i=0}^{OSR+-1} z^{-i}\right)^3$$

Where,

OSR is the Over Sampling Ratio which can be modified to change the output data rate (See CTRLC for the setting of this parameter).

The DC gain of this filter is unity and does not depend on its OSR. However, as it generates a 3rd order zero at (CLK_SDADC_FS / OSR) frequency multiples, its frequency response depends on the OSR parameter. See next section for frequency plots.

Figure 37-3. Spectral Mask of an OSR = 64, CLK_SDADC_FS = 1 MHz, 3rd Order Sinc Filter Overall Response (Continuous Line) and 0–1600Hz Bandwidth Response (Dashed Line)

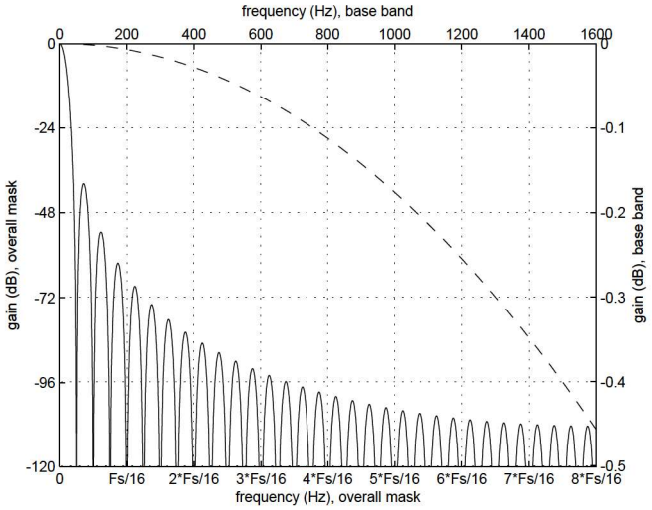

The zeros of this filter are located at multiples of CLK_SDADC_FS/64.

Figure 37-4. Spectral Mask of an OSR = 128, CLK_SDADC_FS = 1 MHz, 3rd Order Sinc Filter Overall Response (Continuous Line) and 0–1600 Hz Bandwidth Response (Dashed Line)

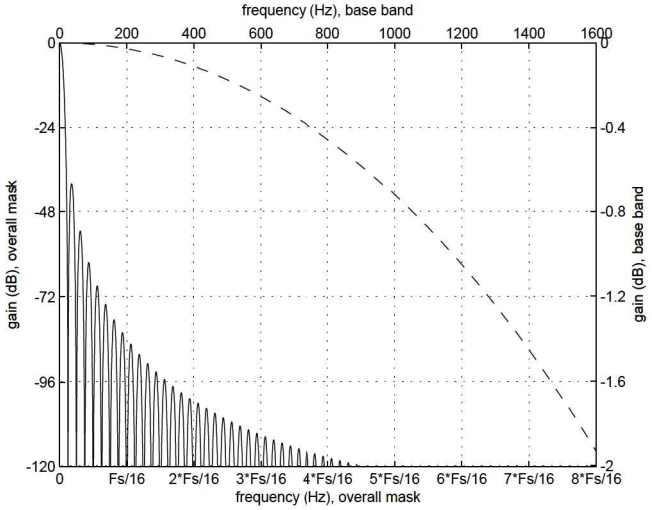

The zeros of this filter are located at multiples of CLK_SDADC_FS/128.

Figure 37-5. Spectral Mask of an OSR = 256, CLK_SDADC_FS = 1 MHz, 3rd Order Sinc Filter Overall Response (Continuous Line) and 0–1600 Hz Bandwidth Response (Dashed Line)

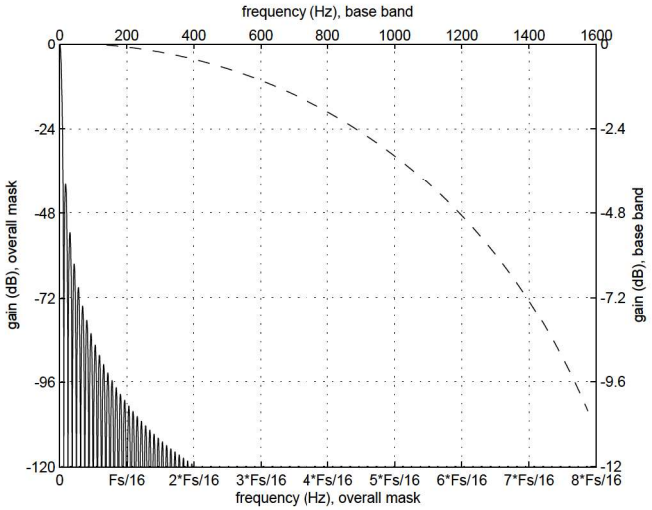

The zeros of this filter are located at multiples of CLK_SDADC_FS/256.

37.6.3.3 Conversion Time

The time needed to convert a value depends on the selected OSR, PRESCALER and on the frequency of the SDADC.

For example, a sigma-delta converter running at CLK_GEN_SDADC = 1MHz with program the OSR of 64 and PRESCALER of 0. The output sampling rate equation is CLK_GEN_SDADC/(OSR * PRESCALER * 4) which means to converts data every (64*2*4)/1e6= 512µs. The output data rate is then 1.953ksps.

Note: The CLK_SDADC_PRESCAL clock range is CLK_GEN_SDADC/2, if PRESCAL is 0.

The OSR and PRESCALER are described in the CTRLB register.

37.6.3.4 Gain and Offset Compensation

A specific offset, gain and shift can be applied to each source of the SDADC by performing the following operation:

$$\mathrm{Data} = (\mathrm{Data}_0 + \mathrm{OFFSET}) \times \frac{\mathrm{GAIN}}{2^{\mathrm{SHIFT}}}$$

Where:

Data0 is an unsigned integer defined on 16 bits. It is the output of the decimation filter.

OFFSET is a signed integer defined on 24 bits (OFFSETCORR register).

GAIN is an unsigned integer defined on 14 bits (GAINCORR register).

SHIFT is an unsigned integer defined on 4 bits (SHIFTCORR register).

The result of the operation is then saturated to be within [0:216-1] and the 16 LSBs of this saturation operation are sent to the controller as the result of the SDADC conversion.

Offset error can be compensated by setting the Chopper mode ON, refer to the 37.7.21 ANACTRL.ONCHOP bit.

37.6.4 DMA Operation

The SDADC generates the following DMA request:

Result Conversion Ready (RESRDY): the request is set when a conversion result is available and cleared when the RESULT register is read.

37.6.5 Interrupts

The SDADC has the following interrupt sources:

- Result Conversion Ready: RESRDY
- Window Monitor: WINMON
- Overrun: OVERRUN

Each interrupt source has an interrupt flag associated with it. The interrupt flag in the Interrupt Flag Status and Clear (INTFLAG) register is set when the interrupt condition occurs. Each interrupt can be individually enabled by writing a one to the corresponding bit in the Interrupt Enable Set (INTENSET) register, and disabled by writing a one to the corresponding bit in the Interrupt Enable Clear (INTENCLR) register. An interrupt request is generated when the interrupt flag is set and the corresponding interrupt is enabled. The interrupt request remains active until the interrupt flag is cleared, the interrupt is disabled, or the SDADC is reset. See 37.7.7 INTFLAG for details on how to clear interrupt flags. All interrupt requests from the peripheral are ORed together on system level to generate one combined interrupt request to the NVIC. The user must read the INTFLAG register to determine which interrupt condition is present.

Note that interrupts must be globally enabled for interrupt requests to be generated.

37.6.6 Events

The SDADC can generate the following output events:

- Result Ready (RESRDY): Generated when the conversion is complete and the result is available. Refer to EVCTRL for details.
- Window Monitor (WINMON): Generated when the window monitor condition match. Refer to WINCTRL register for details.

Writing a one to an Event Output bit in the Event Control Register (EVCTRL.xxEO) enables the corresponding output event. Writing a zero to this bit disables the corresponding output event. Refer to the Event System chapter for details on configuring the event system.

The SDADC can take the following actions on an input event:

- Start conversion (START): Start a conversion. Refer to SWTRIG for details.
- Conversion flush (FLUSH): Flush the conversion. Refer to SWTRIG for details.

Writing a one to an Event Input bit into the Event Control register (EVCTRL.xxEI) enables the corresponding action on input event. Writing a zero to this bit disables the corresponding action on input event.

The SDADC uses only asynchronous events and asynchronous Event System channel path must be configured. By default, the SDADC will detect a rising edge on the incoming event. If the SDADC action must be performed on the falling edge of the incoming event, the event line must be inverted first, by writing to one the corresponding Event Invert Enable bit in Event Control register (EVCTRL.xINV).

Note: If FLUSH and START events are available simultaneously, the FLUSH event has higher priority.

37.6.7 Sleep Mode Operation

The ONDEMAND and RUNSTDBY bits in the Control A register (CTRLA) control the behavior of the SDADC during Standby Sleep mode, in cases where the SDADC is enabled (CTRLA.ENABLE = 1). When CTRLA.ONDEMAND is one, the analog block is powered-off when the conversion is complete. When a start request is detected, the system returns from sleep and starts a new conversion after the start-up time delay.

Table 37-1. SDADC Sleep Behavior

CTRLA.RUNSTDBY	CTRLA.ONDEMAND	CTRLA.ENABLE	Description
x	x	0	Disabled
0	0	1	Run in all sleep modes except Standby mode.
0	1	1	Run in all sleep modes on request, except Standby mode.
1	0	1	Run in all sleep modes.
1	1	1	Run in all sleep modes on request.

When the device is in STANDBY sleep mode the DMA is not able to write the SWTRIG register. To write the SWTRIG register with the DMA the device must be in Active mode or IDLE sleep mode.

37.6.8 Synchronization

Due to the asynchronicity between CLK_SDADC_APB and CLK_GEN_SDADC some registers must be synchronized when accessed. A register can require:

- Synchronization when written
- Synchronization when read
- Synchronization when written and read
- No synchronization

When executing an operation that requires synchronization, the corresponding synchronization bit is set in Synchronization Busy register (SYNCBUSY) and cleared when synchronization is complete.

If an operation that require synchronization is executed while its busy bit is on, the operation is discarded and a bus error is generated.

The following bits need synchronization when written:

- Software Reset bit in Control A register (CTRLA.SWRST)
- Enable bit in Control A register (CTRLA.ENABLE)

Write-synchronization is denoted by the Write-Synchronized property in the register description.

The following registers need synchronization when written:

- Input Control register (INPUTCTRL)
- Reference Control register (REFCTRL)
- Control C register (CTRLC)
- Window Monitor Lower Threshold register (WINLT)
- Window Monitor Upper Threshold register (WINUT)
- Offset correction register (OFFSETCORR)
- Gain correction register (GAINCORR)
- Shift correction register (SHIFTCORR)
- Software Trigger register (SWTRIG)
- Analog Control Register (ANACTRL)

Write-synchronization is denoted by the Write-Synchronized property in the register description.

37.7 Register Summary

Offset	Name	Bit Pos.	7	6	5	4	3	2	1	0
0x00	CTRLA	7:0	ONDEMAND	RUNSTDBY					ENABLE	SWRST
0x01	REFCTRL	7:0	ONREFBUF						REFSEL[1:0]	
0x02	CTRLB	7:0	PRESCALER[7:0]							
		15:8	SKPCNT[3:0]					OSR[2:0]		
0x04	EVCTRL	7:0			WINMONEO	RESRDYEO	STARTINV	FLUSHINV	STARTEI	FLUSHEI
0x05	INTENCLR	7:0						WINMON	OVERRUN	RESRDY
0x06	INTENSET	7:0						WINMON	OVERRUN	RESRDY
0x07	INTFLAG	7:0						WINMON	OVERRUN	RESRDY
0x08	SEQSTATUS	7:0	SEQBUSY				SEQSTATE[3:0]			
0x09	INPUTCTRL	7:0					MUXSEL[3:0]			
0x0A	CTRLC	7:0								FREERUN
0x0B	WINCTRL	7:0						WINMODE[2:0]		
0x0C	WINLT	7:0	WINLT[7:0]							
		15:8	WINLT[15:8]							
		23:16	WINLT[23:16]							
		31:24								
0x10	WINUT	7:0	WINUT[7:0]							
		15:8	WINUT[15:8]							
		23:16	WINUT[23:16]							
		31:24								
0x14	OFFSETCORR	7:0	OFFSETCORR[7:0]							
		15:8	OFFSETCORR[15:8]							
		23:16	OFFSETCORR[23:16]							
		31:24								
0x18	GAINCORR	7:0	GAINCORR[7:0]							
		15:8			GAINCORR[13:8]					
0x1A	SHIFTCORR	7:0					SHIFTCORR[3:0]			
0x1B	Reserved									
0x1C	SWTRIG	7:0							START	FLUSH
0x1D ... 0x1F	Reserved									
0x20	SYNCBUSY	7:0	OFFSETCORR	WINUT	WINLT	WINCTRL	MUXCTRL	CTRLC	ENABLE	SWRST
		15:8					ANACTRL	SWTRIG	SHIFTCORR	GAINCORR
		23:16								
		31:24								
0x24	RESULT	7:0	RESULT[7:0]							
		15:8	RESULT[15:8]							
		23:16	RESULT[23:16]							
		31:24								
0x28	SEQCTRL	7:0						SEQENn[2:0]		
0x29 ... 0x2B	Reserved									
0x2C	ANACTRL	7:0	BUFTEST	ONCHOP		CTLSDADC[4:0]				
0x2D	Reserved									
0x2E	DBGCTRL	7:0								DBGRUN

37.7.1 Control A

Name: CTRLA
Offset: 0x00
Reset: 0x00
Property: PAC Write-Protection, Write-Synchronized (ENABLE, SWRST)

Bit	7	6	5	4	3	2	1	0
	ONDEMAND	RUNSTDBY					ENABLE	SWRST
Access	R/W	R/W					R/W	R/W
Reset	0	0					0	0

Bit 7 – ONDEMAND On Demand Control
The On Demand operation modes allows the SDADC to be enabled or disabled, depending on other peripheral request.
In On Demand operation mode, i.e., if the ONDEMAND bit has been previously written to one, the SDADC will only be running when requested by a peripheral. If there is no peripheral requesting the SDADC will be in a disable state. If On Demand is disable the SDADC will always be running when enabled.
In standby sleep mode, the On Demand operation is still active if the CTRLA.RUNSTDBY bit is one. If CTRLA.RUNSTDBY is zero, the SDADC is disabled.
This bit is not synchronized.

Value	Description
0	The SDADC is always on, if enabled.
1	The SDADC is enabled, when a peripheral is requesting the SDADC conversion. The SDADC is disabled if no peripheral is requesting it.

Bit 6 – RUNSTDBY Run in Standby
This bit controls how the SDADC behaves during Standby Sleep mode:
This bit is not synchronized.

Value	Description
0	The SDADC is halted during Standby Sleep mode.
1	The SDADC is not stopped in Standby Sleep mode. If CTRLA.ONDEMAND is one, the SDADC will be running when a peripheral is requesting it. If CTRLA.ONDEMAND is zero, the SDADC will always be running in Standby Sleep mode.

Bit 1 – ENABLE Enable
Due to synchronization there is delay from writing CTRLA.ENABLE until the peripheral is enabled/disabled. The value written to CTRL.ENABLE will read back immediately and the ENABLE bit in the SYNCBUSY register (SYNCBUSY.ENABLE) will be set. SYNCBUSY.ENABLE will be cleared when the operation is complete.

Value	Description
0	The SDADC is disabled.
1	The SDADC is enabled.

Bit 0 – SWRST Software Reset
Writing a zero to this bit has no effect.
Writing a one to this bit resets all registers in the SDADC, except SYNCBUSY, to their initial state, and the SDADC will be disabled.
Writing a one to CTRLA.SWRST will always take precedence, meaning that all other writes in the same write-operation will be discarded.
Due to synchronization there is a delay from writing CTRLA.SWRST until the reset is complete. CTRLA.SWRST and SYNCBUSY.SWRST will both be cleared when the reset is complete.

Value	Description
0	There is no reset operation ongoing.
1	The reset operation is ongoing.

37.7.2 Reference Control

Name: REFCTRL
Offset: 0x01
Reset: 0x00
Property: PAC Write-Protection, Enable-Protected

Bit	7	6	5	4	3	2	1	0
	ONREFBUF						REFSEL[1:0]	
Access	R/W						R/W	R/W
Reset	0						0	0

Bit 7 – ONREFBUF Reference Buffer On
Turning on the buffer increases the impedance seen on the external reference, so that the current load reduces from 5µA to 0.10µA. This needs to be matched with whatever type of reference circuit is used.

Value	Description
0	Reference Buffer Off
1	Reference Buffer On

Bits 1:0 – REFSEL[1:0] Reference Selection
These bits select the reference for the ADC.
Note: The reference buffer should be enabled (ONREFBUF=1) when using the internal INTREF or DAC output as reference.

Value	Name	Description
0x0	INTREF	Internal voltage reference, supplied by the bandgap (refer to SUPC.VREF.SEL for voltage level information)
0x1	VREFB pin	External 2.4-5.5V
0x2	DAC output	Internal 2.4-5.5V
0x3	VDDANA	Supply 2.7-5.5V

37.7.3 Control B

Name: CTRLB
Offset: 0x02
Reset: 0x2000
Property: PAC Write-Protection, Enable-Protected

Bit	15	14	13	12	11	10	9	8
	SKPCNT[3:0]					OSR[2:0]		
Access	R/W	R/W	R/W	R/W		R/W	R/W	R/W
Reset	0	0	1	0		0	0	0

Bit	7	6	5	4	3	2	1	0
	PRESCALER[7:0]							
Access	R/W	R/W	R/W	R/W	R/W	R/W	R/W	R/W
Reset	0	0	0	0	0	0	0	0

Bits 15:12 – SKPCNT[3:0] Skip Count
How many skip samples before retrieve the first valid sample.
The first valid sample starts from the third sample onward.

Bits 10:8 – OSR[2:0] Over Sampling Ratio
OSR is the Over Sampling Ratio which can be modified to change the output data rate.
The OSR must never be changed while the SDADC is running. One must first place the SDADC in reset state, modify the OSR and then run the SDADC again.
Example: The sampling rate of the SDADC is 1.5Msps/OSR. The maximum sampling rate is then 1.5MSPS/OSR64 ≅ 23.4ksps and the minimum sampling rate is 1.5Msps/OSR1024 ≅ 1.5ksps

Value	Name	Description
0x0	OSR64	Over Sampling Ratio is 64
x01	OSR128	Over Sampling Ratio is 128
0x2	OSR256	Over Sampling Ratio is 256
0x3	OSR512	Over Sampling Ratio is 512
0x4	OSR1024	Over Sampling Ratio is 1024
0x4 – 0xF	-	Reserved

Bits 7:0 – PRESCALER[7:0] Prescaler Configuration
The ADC uses the SDADC Clock to perform conversions.
The CLK_SDADC_PRESCAL clock range is between CLK_GEN_SDADC/2, if PRESCAL is 0, and CLK_GEN_SDADC/512, if PRESCAL is set to 255 (0xFF). PRESCAL must be programmed in order to provide an CLK_SDADC_PRESCAL clock frequency according to the parameters given in the product Electrical Characteristics section.

37.7.4 Event Control

Name: EVCTRL
Offset: 0x04
Reset: 0x00
Property: PAC Write-Protection, Enable-Protected

Bit	7	6	5	4	3	2	1	0
			WINMONEO	RESRDYEO	STARTINV	FLUSHINV	STARTEI	FLUSHEI
Access			R/W	R/W	R/W	R/W	R/W	R/W
Reset			0	0	0	0	0	0

Bit 5 – WINMONEO Window Monitor Event Out
This bit indicates whether the Window Monitor event output is enabled or not and an output event will be generated when the window monitor detects something.

Value	Description
0	Window Monitor event output is disabled and an event will not be generated.
1	Window Monitor event output is enabled and an event will be generated.

Bit 4 – RESRDYEO Result Ready Event Out
This bit indicates whether the Result Ready event output is enabled or not and an output event will be generated when the conversion result is available.

Value	Description
0	Result Ready event output is disabled and an event will not be generated.
1	Result Ready event output is enabled and an event will be generated.

Bit 3 – STARTINV Start Conversion Event Invert Enable

Value	Description
0	start event input source is not inverted.
1	start event input source is inverted.

Bit 2 – FLUSHINV Flush Event Invert Enable

Value	Description
0	flush event input source is not inverted.
1	flush event input source is inverted.

Bit 1 – STARTEI Start Conversion Event Input Enable

Value	Description
0	A new conversion will not be triggered on any incoming event.
1	A new conversion will be triggered on any incoming event.

Bit 0 – FLUSHEI Flush Event Input Enable

Value	Description
0	A flush and new conversion will not be triggered on any incoming event.
1	A flush and new conversion will be triggered on any incoming event.

37.7.5 Interrupt Enable Clear

Name: INTENCLR
Offset: 0x05
Reset: 0x00
Property: PAC Write-Protection

This register allows the user to disable an interrupt without doing a read-modify-write operation. Changes in this register will also be reflected in the Interrupt Enable Set (INTENSET) register.

Bit	7	6	5	4	3	2	1	0
						WINMON	OVERRUN	RESRDY
Access						R/W	R/W	R/W
Reset						0	0	0

Bit 2 – WINMON Window Monitor Interrupt Enable
Writing a zero to this bit has no effect.
Writing a one to this bit will clear the Window Monitor Interrupt Enable bit, which disables the corresponding interrupt request.

Value	Description
0	The window monitor interrupt is disabled.
1	The window monitor interrupt is enabled, and an interrupt request will be generated when the Window Monitor interrupt flag is set.

Bit 1 – OVERRUN Overrun Interrupt Enable
Writing a zero to this bit has no effect.
Writing a one to this bit will clear the Overrun Interrupt Enable bit, which disables the corresponding interrupt request.

Value	Description
0	The Overrun interrupt is disabled.
1	The Overrun interrupt is enabled, and an interrupt request will be generated when the Overrun interrupt flag is set.

Bit 0 – RESRDY Result Ready Interrupt Enable
Writing a zero to this bit has no effect.
Writing a one to this bit will clear the Result Ready Interrupt Enable bit, which disables the corresponding interrupt request.

Value	Description
0	The Result Ready interrupt is disabled.
1	The Result Ready interrupt is enabled, and an interrupt request will be generated when the Result Ready interrupt flag is set.

37.7.6 Interrupt Enable Set

Name: INTENSET
Offset: 0x06
Reset: 0x00
Property: PAC Write-Protection

This register allows the user to enable an interrupt without doing a read-modify-write operation. Changes in this register will also be reflected in the Interrupt Enable Clear (INTENCLR) register.

Bit	7	6	5	4	3	2	1	0
						WINMON	OVERRUN	RESRDY
Access						R/W	R/W	R/W
Reset						0	0	0

Bit 2 – WINMON Window Monitor Interrupt Enable
Writing a zero to this bit has no effect.
Writing a one to this bit will set the Window Monitor Interrupt bit, which enables the Window Monitor interrupt.

Value	Description
0	The Window Monitor interrupt is disabled.
1	The Window Monitor interrupt is enabled.

Bit 1 – OVERRUN Overrun Interrupt Enable
Writing a zero to this bit has no effect.
Writing a one to this bit will set the Overrun Interrupt bit, which enables the Overrun interrupt.

Value	Description
0	The Overrun interrupt is disabled.
1	The Overrun interrupt is enabled.

Bit 0 – RESRDY Result Ready Interrupt Enable
Writing a zero to this bit has no effect.
Writing a one to this bit will set the Result Ready Interrupt bit, which enables the Result Ready interrupt.

Value	Description
0	The Result Ready interrupt is disabled.
1	The Result Ready interrupt is enabled.

37.7.7 Interrupt Flag Status and Clear

Name: INTFLAG
Offset: 0x07
Reset: 0x00
Property: –

Bit	7	6	5	4	3	2	1	0
						WINMON	OVERRUN	RESRDY
Access						R/W	R/W	R/W
Reset						0	0	0

Bit 2 – WINMON Window Monitor
This flag is cleared by writing a one to the flag or by reading the RESULT register.
This flag is set on the next CLK_GEN_SDADC cycle after a match with the window monitor condition, and an interrupt request will be generated if INTENCLR/SET.WINMON is one.
Writing a zero to this bit has no effect.
Writing a one to this bit clears the Window Monitor interrupt flag.

Bit 1 – OVERRUN Overrun
This flag is cleared by writing a one to the flag.
This flag is set if RESULT is written before the previous value has been read by CPU, and an interrupt request will be generated if INTENCLR/SET.OVERRUN is one.
Writing a zero to this bit has no effect.
Writing a one to this bit clears the Overrun interrupt flag.

Bit 0 – RESRDY Result Ready
This flag is cleared by writing a one to the flag or by reading the RESULT register.
This flag is set when the conversion result is available, and an interrupt will be generated if INTENCLR/SET.RESRDY is one.
Writing a zero to this bit has no effect.
Writing a one to this bit clears the Result Ready interrupt flag.

37.7.8 Sequence Status

Name: SEQSTATUS
Offset: 0x08
Reset: 0x00
Property: -

Bit	7	6	5	4	3	2	1	0
	SEQBUSY				SEQSTATE[3:0]			
Access	R				R	R	R	R
Reset	0				0	0	0	0

Bit 7 – SEQBUSY Sequence busy
This bit is set when the sequence start.
This bit is clear when the last conversion in a sequence is done.

Bits 3:0 – SEQSTATE[3:0] Sequence State
This bit field is the pointer of sequence. This value identifies the last conversion done in the sequence.

37.7.9 Input Control

Name: INPUTCTRL
Offset: 0x09
Reset: 0x00
Property: PAC Write-Protection, Write-Synchronized

Bit	7	6	5	4	3	2	1	0
					MUXSEL[3:0]			
Access					R/W	R/W	R/W	R/W
Reset					0	0	0	0

Bits 3:0 – MUXSEL[3:0] ADC Analog Input Selection
These bits define the Mux selection for the SDADC input.

Value	Name	Description
0x00	AIN0	Select ADC AINN0 and AINP0 pins
0x01	AIN1	Select ADC AINN1 and AINP1 pins
0x02	AIN2	Select ADC AINN2 and AINP2 pins
0x03 - 0x0F	-	Reserved

37.7.10 Control C

Name: CTRLC
Offset: 0x0A
Reset: 0x00
Property: PAC Write-Protection, Write-Synchronized

Bit	7	6	5	4	3	2	1	0
								FREERUN
Access								R/W
Reset								0

Bit 0 – FREERUN Free Running Mode

Value	Description
0	The SDADC run in single conversion mode.
1	The SDADC is in free running mode and a new conversion will be initiated when a previous conversion completes.

37.7.11 Window Monitor Control

Name: WINCTRL
Offset: 0x0B
Reset: 0x00
Property: PAC Write-Protection, Write-Synchronized

Bit	7	6	5	4	3	2	1	0
						WINMODE[2:0]		
Access						R/W	R/W	R/W
Reset						0	0	0

Bits 2:0 – WINMODE[2:0] Window Monitor Mode
These bits enable and define the window monitor mode.

Value	Name	Description
0x0	DISABLE	No window mode (default)
0x1	ABOVE	RESULT > WINLT
0x2	BELOW	RESULT < WINUT
0x3	INSIDE	WINLT < RESULT < WINUT
0x4	OUTSIDE	WINUT < RESULT or RESULT < WINLT
0x5 – 0x7		Reserved

37.7.12 Window Monitor Lower Threshold

Name: WINLT
Offset: 0x0C
Reset: 0x00000000
Property: PAC Write-Protection, Write-Synchronized

Bit	31	30	29	28	27	26	25	24
Access								
Reset								

Bit	23	22	21	20	19	18	17	16
	WINLT[23:16]							
Access	R/W	R/W	R/W	R/W	R/W	R/W	R/W	R/W
Reset	0	0	0	0	0	0	0	0

Bit	15	14	13	12	11	10	9	8
	WINLT[15:8]							
Access	R/W	R/W	R/W	R/W	R/W	R/W	R/W	R/W
Reset	0	0	0	0	0	0	0	0

Bit	7	6	5	4	3	2	1	0
	WINLT[7:0]							
Access	R/W	R/W	R/W	R/W	R/W	R/W	R/W	R/W
Reset	0	0	0	0	0	0	0	0

Bits 23:0 – WINLT[23:0] Window Lower Threshold
If the window monitor is enabled, these bits define the lower threshold value.

37.7.13 Window Monitor Upper Threshold

Name: WINUT
Offset: 0x10
Reset: 0x00000000
Property: PAC Write-Protection, Write-Synchronized

Bit	31	30	29	28	27	26	25	24
Access								
Reset								

Bit	23	22	21	20	19	18	17	16
	WINUT[23:16]							
Access	R/W	R/W	R/W	R/W	R/W	R/W	R/W	R/W
Reset	0	0	0	0	0	0	0	0

Bit	15	14	13	12	11	10	9	8
	WINUT[15:8]							
Access	R/W	R/W	R/W	R/W	R/W	R/W	R/W	R/W
Reset	0	0	0	0	0	0	0	0

Bit	7	6	5	4	3	2	1	0
	WINUT[7:0]							
Access	R/W	R/W	R/W	R/W	R/W	R/W	R/W	R/W
Reset	0	0	0	0	0	0	0	0

Bits 23:0 – WINUT[23:0] Window Upper Threshold
If the window monitor is enabled, these bits define the upper threshold value.

37.7.14 Offset Correction

Name: OFFSETCORR
Offset: 0x14
Reset: 0x00000000
Property: PAC Write-Protection, Write-Synchronized

Bit	31	30	29	28	27	26	25	24
Access								
Reset								

Bit	23	22	21	20	19	18	17	16
	OFFSETCORR[23:16]							
Access	R/W	R/W	R/W	R/W	R/W	R/W	R/W	R/W
Reset	0	0	0	0	0	0	0	0

Bit	15	14	13	12	11	10	9	8
	OFFSETCORR[15:8]							
Access	R/W	R/W	R/W	R/W	R/W	R/W	R/W	R/W
Reset	0	0	0	0	0	0	0	0

Bit	7	6	5	4	3	2	1	0
	OFFSETCORR[7:0]							
Access	R/W	R/W	R/W	R/W	R/W	R/W	R/W	R/W
Reset	0	0	0	0	0	0	0	0

Bits 23:0 – OFFSETCORR[23:0] Offset Correction
The OFFSETCORR is a signed integer value.
A specific offset, gain and shift can be applied to SDADC by performing the following operation:
`(RESULT + OFFSETCORR)*GAINCORR/2^SHIFTCORR`

37.7.15 Gain Correction

Name: GAINCORR
Offset: 0x18
Reset: 0x0001
Property: PAC Write-Protection, Write-Synchronized

Bit	15	14	13	12	11	10	9	8
			GAINCORR[13:8]					
Access			R	R	R	R	R	R
Reset			0	0	0	0	0	0

Bit	7	6	5	4	3	2	1	0
	GAINCORR[7:0]							
Access	R	R	R	R	R	R	R	R
Reset	1	0	0	0	0	0	0	0

Bits 13:0 – GAINCORR[13:0] Gain Correction
A specific offset, gain and shift can be applied to SDADC by performing the following operation:

```
(RESULT + OFFSETCORR)*GAINCORR/2^SHIFTCORR
```

37.7.16 Shift Correction

Name: SHIFTCORR
Offset: 0x1A
Reset: 0x00
Property: PAC Write-Protection, Write-Synchronized

Bit	7	6	5	4	3	2	1	0
					SHIFTCORR[3:0]			
Access					R/W	R/W	R/W	R/W
Reset					0	0	0	0

Bits 3:0 – SHIFTCORR[3:0] Shift Correction
A specific offset, gain and shift can be applied to SDADC by performing the following operation:
`(RESULT + OFFSETCORR)*GAINCORR/2^SHIFTCORR`

37.7.17 Software Trigger

Name: SWTRIG
Offset: 0x1C
Reset: 0x00
Property: PAC Write-Protection, Write-Synchronized

Bit	7	6	5	4	3	2	1	0
							START	FLUSH
Access							W	W
Reset							0	0

Bit 1 – START SDADC Start Conversion
Writing a one to this bit will start a conversion or sequence. The bit is cleared by hardware when the conversion has started. Setting this bit when it is already set has no effect.
Writing this bit to zero will have no effect.

Bit 0 – FLUSH SDADC Conversion Flush
Writing a one to this bit will be flush the SDADC pipeline. A flush will restart the SDADC conversion and all conversions in progress will be aborted and lost. This bit is cleared until the SDADC has been flushed.
After the flush, the ADC will resume where it left off; i.e., if a conversion was pending, the ADC will start a new conversion.
Writing this bit to zero will have no effect.

37.7.18 Synchronization Busy

Name: SYNCBUSY
Offset: 0x20
Reset: 0x00000000
Property: -

Bit	31	30	29	28	27	26	25	24
Access								
Reset								

Bit	23	22	21	20	19	18	17	16
Access								
Reset								

Bit	15	14	13	12	11	10	9	8
					ANACTRL	SWTRIG	SHIFTCORR	GAINCORR
Access					R	R	R	R
Reset					0	0	0	0

Bit	7	6	5	4	3	2	1	0
	OFFSETCORR	WINUT	WINLT	WINCTRL	MUXCTRL	CTRLC	ENABLE	SWRST
Access	R	R	R	R	R	R	R	R
Reset	0	0	0	0	0	0	0	0

Bit 11 – ANACTRL Analog Control Synchronization Busy
This bit is cleared when the synchronization of ANACTRL register between the clock domains is complete.
This bit is set when the synchronization of ANACTRL register between clock domains is started.

Bit 10 – SWTRIG Software Trigger Synchronization Busy
This bit is cleared when the synchronization of SWTRIG register between the clock domains is complete.
This bit is set when the synchronization of SWTRIG register between clock domains is started.

Bit 9 – SHIFTCORR Shift Correction Synchronization Busy
This bit is cleared when the synchronization of SHIFTCORR register between the clock domains is complete.
This bit is set when the synchronization of SHIFTCORR register between clock domains is started.

Bit 8 – GAINCORR Gain Correction Synchronization Busy
This bit is cleared when the synchronization of GAINCORR register between the clock domains is complete.
This bit is set when the synchronization of GAINCORR register between clock domains is started.

Bit 7 – OFFSETCORR Offset Correction Synchronization Busy
This bit is cleared when the synchronization of OFFSETCORR register between the clock domains is complete.
This bit is set when the synchronization of OFFSETCORR register between clock domains is started.

Bit 6 – WINUT Window Monitor Lower Threshold Synchronization Busy
This bit is cleared when the synchronization of WINUT register between the clock domains is complete.
This bit is set when the synchronization of WINUT register between clock domains is started.

Bit 5 – WINLT Window Monitor Upper Threshold Synchronization Busy
This bit is cleared when the synchronization of WINLT register between the clock domains is complete.
This bit is set when the synchronization of WINLT register between clock domains is started.

Bit 4 – WINCTRL Window Monitor Control Synchronization Busy
This bit is cleared when the synchronization of WINCTRL register between the clock domains is complete.
This bit is set when the synchronization of WINCTRL register between clock domains is started.

Bit 3 – MUXCTRL Mux Control Synchronization Busy
This bit is cleared when the synchronization of MUXCTRL register between the clock domains is complete.
This bit is set when the synchronization of MUXCTRL register between clock domains is started.

Bit 2 – CTRLC Control C Synchronization Busy
This bit is cleared when the synchronization of CTRLC register between the clock domains is complete.
This bit is set when the synchronization of CTRLC register between clock domains is started.

Bit 1 – ENABLE ENABLE Synchronization Busy
This bit is cleared when the synchronization of ENABLE register between the clock domains is complete.
This bit is set when the synchronization of ENABLE register between clock domains is started.

Bit 0 – SWRST SWRST Synchronization Busy
This bit is cleared when the synchronization of SWRST register between the clock domains is complete.
This bit is set when the synchronization of SWRST register between clock domains is started

37.7.19 Result

Name: RESULT
Offset: 0x24
Reset: 0x00000000
Property: -

Bit	31	30	29	28	27	26	25	24
Access								
Reset								

Bit	23	22	21	20	19	18	17	16
	RESULT[23:16]							
Access	R	R	R	R	R	R	R	R
Reset	0	0	0	0	0	0	0	0

Bit	15	14	13	12	11	10	9	8
	RESULT[15:8]							
Access	R	R	R	R	R	R	R	R
Reset	0	0	0	0	0	0	0	0

Bit	7	6	5	4	3	2	1	0
	RESULT[7:0]							
Access	R	R	R	R	R	R	R	R
Reset	0	0	0	0	0	0	0	0

Bits 23:0 – RESULT[23:0] Result Conversion Value
The analog-to-digital conversion data is placed into this register at the end of a conversion and remains until a new conversion is completed.
The RESULT is a signed integer value with 24-bit size. The SDADC conversion result is left-adjusted in the RESULT register.

37.7.20 Sequence Control

Name: SEQCTRL
Offset: 0x28
Reset: 0x00
Property: PAC Write-Protection

Bit	7	6	5	4	3	2	1	0
						SEQENn[2:0]		
Access						R/W	R/W	R/W
Reset						0	0	0

Bits 2:0 – SEQENn[2:0] Enable Positive Input in the Sequence
For details on available mux selections, refer to 37.7.9 INPUTCTRL.
The sequence start from the lowest input, and go to the next enabled input automatically when the conversion is done. If no bits are set the sequence is disabled.

Value	Description
0	Disable the positive input mux n selection from the sequence.
1	Enable the positive input mux n selection to the sequence.

37.7.21 Analog Control

Name: ANACTRL
Offset: 0x2C
Reset: 0x00
Property: PAC Write-Protection, Write-Synchronized.

Bit	7	6	5	4	3	2	1	0
	BUFTEST	ONCHOP		CTLSDADC[4:0]				
Access	R/W	R/W		R/W	R/W	R/W	R/W	R/W
Reset	0	0		0	0	0	0	0

Bit 7 – BUFTEST Buffer Test

Bit 6 – ONCHOP ONCHOP

Value	Description
0	No Chopper at SDADC input
1	Chopper at SDADC input

Bits 4:0 – CTLSDADC[4:0] CTLSDADC
SDADC Bias Current Control and used for Debugg/Characterization

37.7.22 Debug Control

Name: DBGCTRL
Offset: 0x2E
Reset: 0x00
Property: PAC Write-Protectedion

Bit	7	6	5	4	3	2	1	0
								DBGRUN
Access								R/W
Reset								0

Bit 0 – DBGRUN Debug Run
This bit is reset by a system software reset.
This bit controls the functionality when the CPU is halted by an external debugger.
This bit should be written only while a conversion is not ongoing.

Value	Description
0	The SDADC is halted when the CPU is halted by an external debugger.
1	The SDADC continues normal operation when the CPU is halted by an external debugger.

38. Analog Comparators (AC)

38.1 Overview

The Analog Comparator (AC) supports multiple individual comparators. Each comparator (COMP) compares the voltage levels on two inputs, and provides a digital output based on this comparison. Each comparator may be configured to generate interrupt requests and peripheral events upon several combinations of input change.

Hysteresis and propagation delay can be adjusted to achieve optimal operation for each application.

The input selection includes four shared analog port pins and several internal signals. Each Comparator Output state can also be output on a pin for use by external devices.

The comparators are grouped in pairs on each port. The AC peripheral implements one pair of comparators and one stand alone comparator. These are called Comparator 0 (COMP0) and Comparator 1 (COMP1). The pair can be set in Window mode to compare a signal to a voltage range instead of a single voltage level.

38.2 Features

- Two individual comparators
- Selectable propagation delay versus current consumption
- Hysteresis: On or Off
- Analog comparator outputs available on pins
  - Asynchronous or synchronous
- Flexible input selection:
  - Four pins selectable for positive or negative inputs
  - Ground (for zero crossing)
  - INTREF reference voltage, supplied by the bandgap
  - 64-level programmable VDD scaler per comparator
  - DAC (if available)
- Interrupt generation on:
  - Rising or falling edge
  - Toggle
  - End of comparison
- Window function interrupt generation on:
  - Signal above window
  - Signal inside window
  - Signal below window
  - Signal outside window
- Event generation on:
  - Comparator output
  - Window function inside/outside window
- Optional digital filter on comparator output
- Low-power option
  - Single-shot support

38.3 Block Diagram

Figure 38-1. Analog Comparator Block Diagram (First Pair)

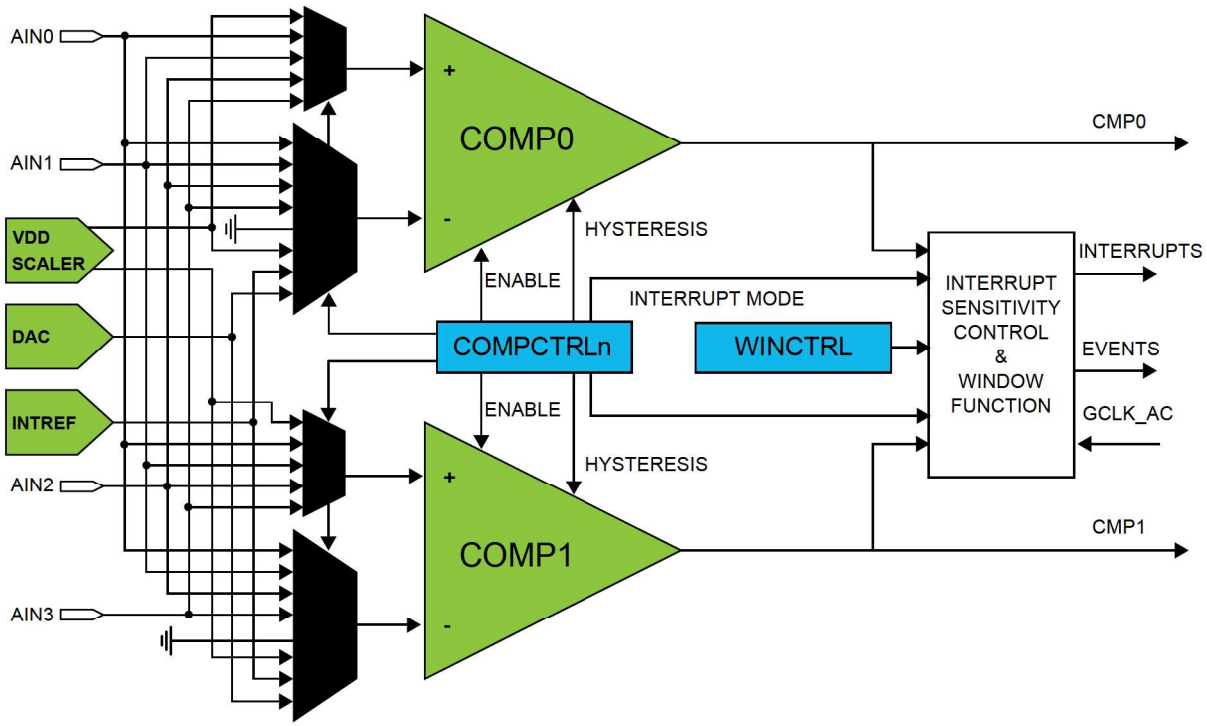

38.4 Signal Description

Signal	Description	Type
AIN[3..0]	Analog input	Comparator inputs
CMP[1..0]	Digital output	Comparator outputs

Refer to the Pinout for details on the pin mapping for this peripheral. One signal can be mapped on several pins.

38.5 Peripheral Dependencies

Peripheral	Base Address	IRQ	AHB CLK	APB CLK	Generic CLK	PAC		Events		DMA	Sleep Walking
			Enabled at reset	Enabled at reset	Index	Index	Prot at reset	User	Generator	Index	
AC	0x42005000	23	-	N	33	20	N	34-35: SOC0-1	73-74: COMP0-1 75: WIN0	-	Y

38.6 Functional Description

38.6.1 Principle of Operation

Each comparator has one positive input and one negative input. Each positive input may be chosen from a selection of analog input pins. Each negative input may be chosen from a selection of both analog input pins and internal inputs, such as INTREF voltage reference.

The digital output from the comparator is '1' when the difference between the positive and the negative input voltage is positive, and '0' otherwise.

The individual comparators can be used independently (Normal mode) or paired to form a window comparison (Window mode).

38.6.2 Basic Operation

38.6.2.1 Initialization

Some registers are enable-protected, meaning they can only be written when the module is disabled.

The following register is enable-protected:

- Event Control register (EVCTRL)

Enable-protection is denoted by the "Enable-Protected" property in each individual register description.

38.6.2.2 Enabling, Disabling and Resetting

The AC is enabled by writing a '1' to the Enable bit in the Control A register (CTRLA.ENABLE). The AC is disabled writing a '0' to CTRLA.ENABLE.

The AC is reset by writing a '1' to the Software Reset bit in the Control A register (CTRLA.SWRST). All registers in the AC will be reset to their initial state, and the AC will be disabled. Refer to CTRLA for details.

38.6.2.3 Comparator Configuration

Each individual comparator must be configured by its respective Comparator Control register (COMPCTRLx) before that comparator is enabled. These settings cannot be changed while the comparator is enabled.

- Select the desired measurement mode with COMPCTRLx.SINGLE. See Starting a Comparison for more details.
- Select the desired hysteresis with COMPCTRLx.HYSTEN. See Input Hysteresis for more details.
- Select the comparator speed versus power with COMPCTRLx.SPEED. See Propagation Delay vs. Power Consumption for more details.
- Select the interrupt source with COMPCTRLx.INTSEL.
- Select the positive and negative input sources with the COMPCTRLx.MUXPOS and COMPCTRLx.MUXNEG bits. See Selecting Comparator Inputs for more details.
- Select the filtering option with COMPCTRLx.FLEN.
- Select standby operation with Run in Standby bit (COMPCTRLx.RUNSTDBY).

The individual comparators are enabled by writing a '1' to the Enable bit in the Comparator x Control registers (COMPCTRLx.ENABLE). The individual comparators are disabled by writing a '0' to COMPCTRLx.ENABLE. Writing a '0' to CTRLA.ENABLE will also disable all the comparators, but will not clear their COMPCTRLx.ENABLE bits.

38.6.2.4 Starting a Comparison

Each comparator channel can be in one of two different measurement modes, determined by the COMPCTRLx.SINGLE bit:

- Continuous measurement
- Single-shot

After being enabled, a start-up delay is required before the result of the comparison is ready. This start-up time is measured automatically to account for environmental changes, such as temperature or voltage supply level, and is specified in 43. Electrical Characteristics. During the start-up time, the COMP output is not available.

The comparator can be configured to generate interrupts when the output toggles, when the output changes from '0' to '1' (rising edge), when the output changes from '1' to '0' (falling edge) or at the end of the comparison. An end-of-

comparison interrupt can be used with the single-shot mode to chain further events in the system, regardless of the state of the comparator outputs. The interrupt mode is set by the Interrupt Selection bit group in the Comparator Control register (COMPCTRLx.INTSEL). Events are generated using the comparator output state, regardless of whether the interrupt is enabled or not.

38.6.2.4.1 Continuous Measurement

Continuous measurement is selected by writing COMPCTRLx.SINGLE to zero. In continuous mode, the comparator is continuously enabled and performing comparisons. This ensures that the result of the latest comparison is always available in the Current State bit in the Status A register (STATUSA.STATEx).

After the start-up time has passed, a comparison is done and STATUSA is updated. The Comparator x Ready bit in the Status B register (STATUSB.READYx) is set, and the appropriate peripheral events and interrupts are also generated. New comparisons are performed continuously until the COMPCTRLx.ENABLE bit is written to zero. The start-up time applies only to the first comparison.

In continuous operation, edge detection of the comparator output for interrupts is done by comparing the current and previous sample. The sampling rate is the GCLK_AC frequency. An example of continuous measurement is shown in the Figure 38-2.

Figure 38-2. Continuous Measurement Example

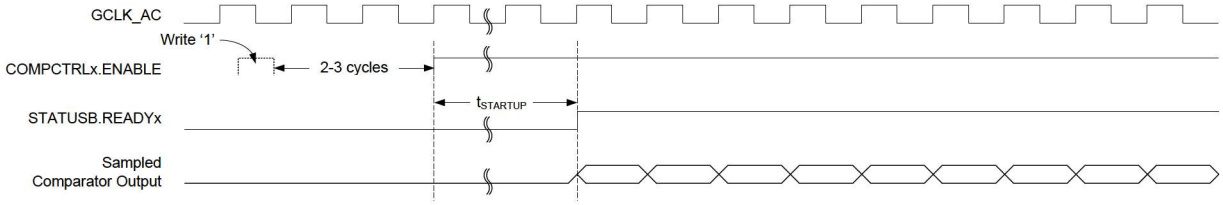

For low-power operation, comparisons can be performed during sleep modes without a clock. The comparator is enabled continuously, and changes of the comparator state are detected asynchronously. When a toggle occurs, the Power Manager will start GCLK_AC to register the appropriate peripheral events and interrupts. The GCLK_AC clock is then disabled again automatically, unless configured to wake up the system from sleep.

38.6.2.4.2 Single-Shot

Single-shot operation is selected by writing COMPCTRLx.SINGLE to '1'. During single-shot operation, the comparator is normally idle. The user starts a single comparison by writing '1' to the respective Start Comparison bit in the write-only Control B register (CTRLB.STARTx). The comparator is enabled, and after the start-up time has passed, a single comparison is done and STATUSA.STATEx is updated. Appropriate peripheral events and interrupts are also generated. No new comparisons will be performed.

Writing '1' to CTRLB.STARTx also clears the Comparator x Ready bit in the Status B register (STATUSB.READYx). STATUSB.READYx is set automatically by hardware after the single comparison has completed.

A single-shot measurement can also be triggered by the Event System. Setting the Comparator x Event Input bit in the Event Control Register (EVCTRL.COMPEIx) enables triggering on incoming peripheral events. Each comparator can be triggered independently by separate events. Event-triggered operation is similar to user-triggered operation; the difference is that a peripheral event from another hardware module causes the hardware to automatically start the comparison and clear STATUSB.READYx.

To detect an edge of the comparator output in single-shot operation for the purpose of interrupts, the result of the current measurement is compared with the result of the previous measurement (one sampling period earlier). An example of single-shot operation is shown in Figure 38-3.

Figure 38-3. Single-Shot Example

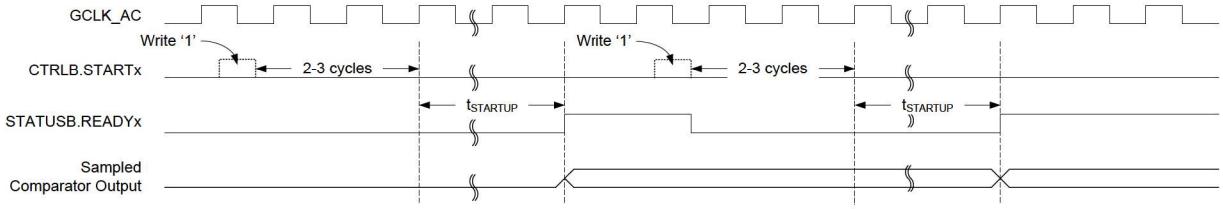

For low-power operation, event-triggered measurements can be performed during sleep modes. When the event occurs, the Power Manager will start GCLK_AC. The comparator is enabled, and after the startup time has passed, a

comparison is done and appropriate peripheral events and interrupts are also generated. The comparator and GCLK_AC are then disabled again automatically, unless configured to wake up the system from sleep.

38.6.3 Selecting Comparator Inputs

Each comparator has one positive and one negative input. The positive input is one of the external input pins (AINx). The negative input can be fed either from an external input pin (AINx) or from one of the several internal reference voltage sources common to all comparators. The user selects the input source as follows:

- The positive input is selected by the Positive Input MUX Select bit group in the Comparator Control register (COMPCTRLx.MUXPOS)
- The negative input is selected by the Negative Input MUX Select bit group in the Comparator Control register (COMPCTRLx.MUXNEG)

In the case of using an external I/O pin, the selected pin must be configured for analog use in the PORT Controller by disabling the digital input and output. The switching of the analog input multiplexers is controlled to minimize crosstalk between the channels. The input selection must be changed only while the individual comparator is disabled.

Note: For internal use of the comparison results by the CCL, this bit must be 0x1 or 0x2.

38.6.4 Window Operation

Each comparator pair can be configured to work together in window mode. In this mode, a voltage range is defined, and the comparators give information about whether an input signal is within this range or not. Window mode is enabled by the Window Enable x bit in the Window Control register (WINCTRL.WENx). Both comparators in a pair must have the same measurement mode setting in their respective Comparator Control Registers (COMPCTRLx.SINGLE).

To physically configure the pair of comparators for window mode, the same I/O pin must be chosen as positive input for each comparator, providing a shared input signal. The negative inputs define the range for the window. In Figure 38-4, COMP0 defines the upper limit and COMP1 defines the lower limit of the window, as shown but the window will also work in the opposite configuration with COMP0 lower and COMP1 higher. The current state of the window function is available in the Window x State bit group of the Status register (STATUSA.WSTATEx).

Window mode can be configured to generate interrupts when the input voltage reaches values below the window, above the window, inside the window or outside of the window. The interrupt selections are set by the Window Interrupt Selection bit field in the Window Control register (WINCTRL.WINTSEL). Events are generated using the inside/outside state of the window, regardless of whether the interrupt is enabled or not. Note that the individual comparator outputs, interrupts and events continue to function normally during window mode.

When the comparators are configured for window mode and single-shot mode, measurements are performed simultaneously on both comparators. Writing '1' to either Start Comparison bit in the Control B register (CTRLB.STARTx) will start a measurement. Likewise either peripheral event can start a measurement.

Figure 38-4. Comparators in Window Mode

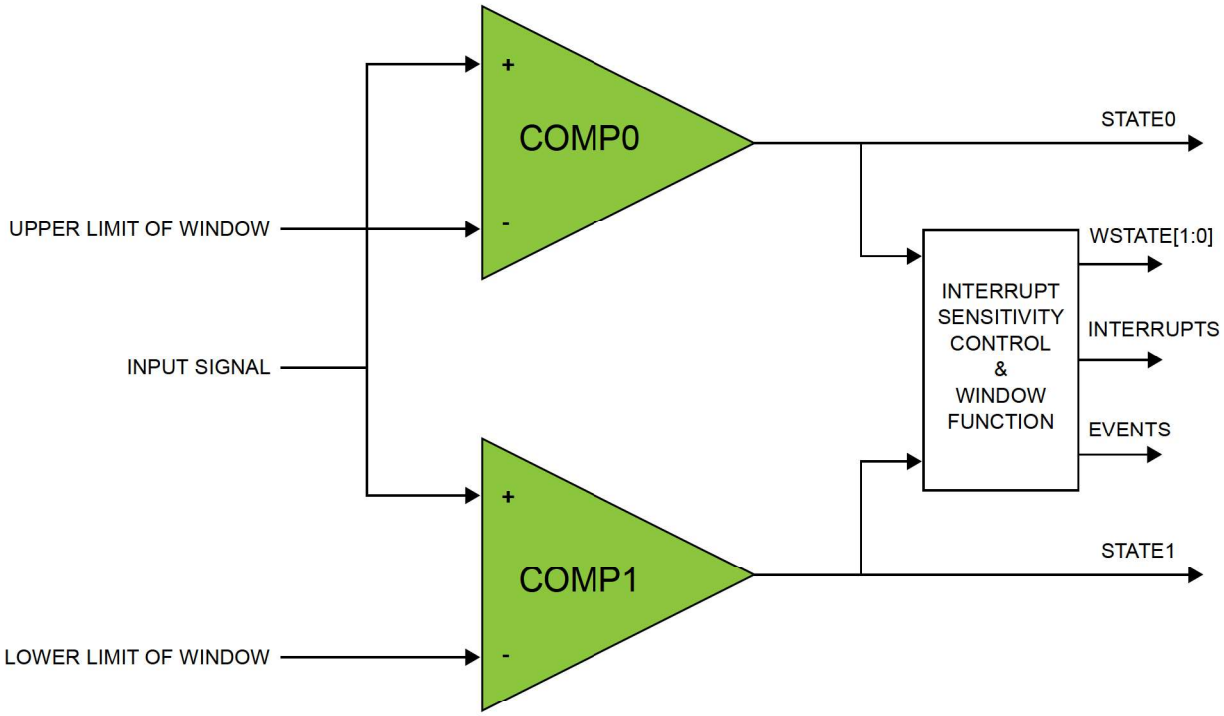

38.6.5 VDD Scaler

The VDD scaler generates a reference voltage that is a fraction of the device's supply voltage, with 64 levels. One independent voltage channel is dedicated for each comparator. The scaler of a comparator is enabled when the Negative Input Mux bit field or the Positive Input Mux in the respective Comparator Control register (COMPCTRLx.MUXNEG, or COMPCTRLx.MUXPOS) is set to 0x5 for Negative Input or 0x04 for Positive Input and the comparator is enabled. The voltage of each channel is selected by the Value bit field in the SCALERx registers (SCALERx.VALUE).

Figure 38-5. VDD Scaler

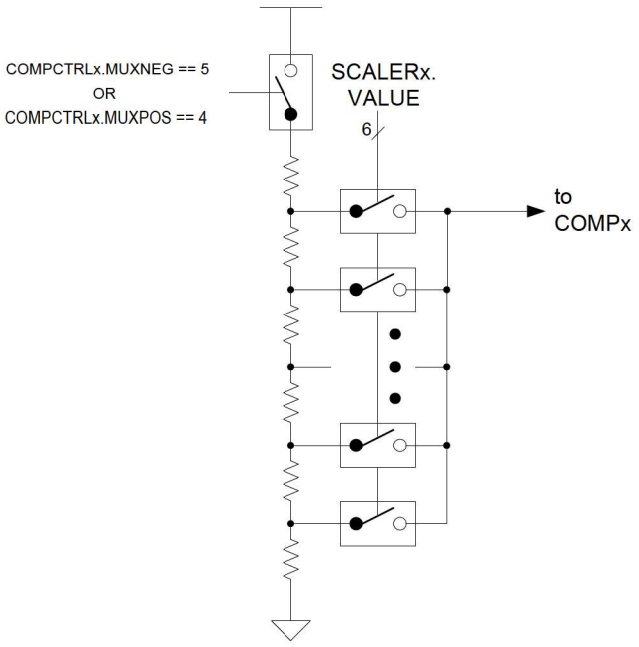

38.6.6 Input Hysteresis

Application software can selectively enable/disable hysteresis for the comparison. Applying hysteresis will help prevent constant toggling of the output, which can be caused by noise when the input signals are close to each other.

Hysteresis is enabled for each comparator individually by the Hysteresis Enable bit in the Comparator x Control register (COMPCTRLx.HYSTEN). Hysteresis is available only in continuous mode (COMPCTRLx.SINGLE=0).

38.6.7 Propagation Delay vs. Power Consumption

It is possible to trade off comparison speed for power efficiency to get the shortest possible propagation delay or the lowest power consumption. The speed setting is configured for each comparator individually by the Speed bit group in the Comparator x Control register (COMPCTRLx.SPEED). The Speed bits select the amount of bias current provided to the comparator, and as such will also affect the start-up time.

38.6.8 Filtering

The output of the comparators can be filtered digitally to reduce noise. The filtering is determined by the Filter Length bits in the Comparator Control x register (COMPCTRLx.FLEN), and is independent for each comparator. Filtering is selectable from none, 3-bit majority (N=3) or 5-bit majority (N=5) functions. Any change in the comparator output is considered valid only if N/2+1 out of the last N samples agree. The filter sampling rate is the GCLK_AC frequency.

Note that filtering creates an additional delay of N-1 sampling cycles from when a comparison is started until the comparator output is validated. For continuous mode, the first valid output will occur when the required number of filter samples is taken. Subsequent outputs will be generated every cycle based on the current sample plus the previous N-1 samples, as shown in Figure 38-6. For single-shot mode, the comparison completes after the Nth filter sample, as shown in Figure 38-7.

Figure 38-6. Continuous Mode Filtering

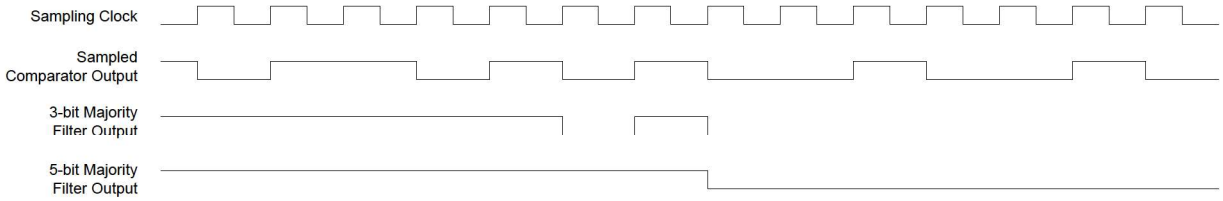

Figure 38-7. Single-Shot Filtering

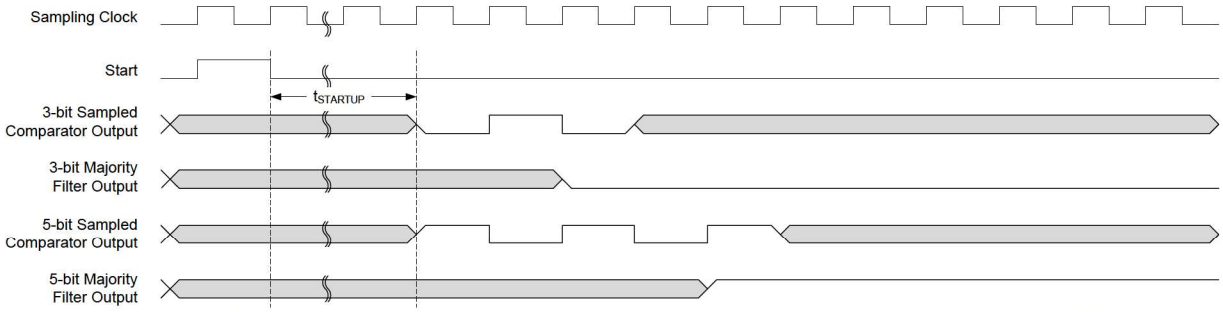

During sleep modes, filtering is supported only for single-shot measurements. Filtering must be disabled if continuous measurements will be done during sleep modes, or the resulting interrupt/event may be generated incorrectly.

38.6.9 Comparator Output

The output of each comparator can be routed to an I/O pin by setting the Output bit group in the Comparator Control x register (COMPCTRLx.OUT). This allows the comparator to be used by external circuitry. Either the raw, non-synchronized output of the comparator or the CLK_AC-synchronized version, including filtering, can be used as the I/O signal source. The output appears on the corresponding CMP[x] pin.

38.6.10 Offset Compensation

The Swap bit in the Comparator Control registers (COMPCTRLx.SWAP) controls switching of the input signals to a comparator's positive and negative terminals. When the comparator terminals are swapped, the output signal from the comparator is also inverted, as shown in Figure 38-8. This allows the user to measure or compensate for the

comparator input offset voltage. As part of the input selection, COMPCTRLx.SWAP can be changed only while the comparator is disabled.

Figure 38-8. Input Swapping for Offset Compensation

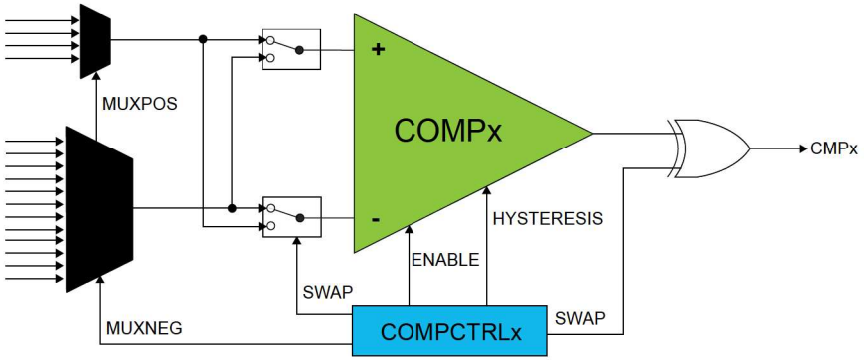

38.6.11 Interrupts

The AC has the following interrupt sources:

- Comparator (COMP0 and COMP1): Indicates a change in comparator status.
- Window (WIN0): Indicates a change in the window status.

Comparator interrupts are generated based on the conditions selected by the Interrupt Selection bit group in the Comparator Control registers (COMPCTRLx.INTSEL). Window interrupts are generated based on the conditions selected by the Window Interrupt Selection bit group in the Window Control register (WINCTRL.WINTSEL[1:0]).

Each interrupt source has an interrupt flag associated with it. The interrupt flag in the Interrupt Flag Status and Clear (INTFLAG) register is set when the interrupt condition occurs. Each interrupt can be individually enabled by writing a one to the corresponding bit in the Interrupt Enable Set (INTENSET) register, and disabled by writing a one to the corresponding bit in the Interrupt Enable Clear (INTENCLR) register. An interrupt request is generated when the interrupt flag is set and the corresponding interrupt is enabled. The interrupt request remains active until the interrupt flag is cleared, the interrupt is disabled, or the AC is reset. See the INTFLAG register for details on how to clear interrupt flags. All interrupt requests from the peripheral are ORed together on system level to generate one combined interrupt request to the NVIC. The user must read the INTFLAG register to determine which interrupt condition is present.

Note that interrupts must be globally enabled for interrupt requests to be generated.

38.6.12 Events

The AC can generate the following output events:

- Comparator (COMP0 and COMP1): Generated as a copy of the comparator status
- Window (WIN0): Generated as a copy of the window inside/outside status

Writing a one to an Event Output bit in the Event Control Register (EVCTRL.xxEO) enables the corresponding output event. Writing a zero to this bit disables the corresponding output event. Refer to the Event System chapter for details on configuring the event system.

The AC can take the following action on an input event:

- Start comparison (START0 and START1): Start a comparison.

Writing a one to an Event Input bit into the Event Control register (EVCTRL.COMPEIx) enables the corresponding action on input event. Writing a zero to this bit disables the corresponding action on input event. Note that if several events are connected to the AC, the enabled action will be taken on any of the incoming events. Refer to the Event System chapter for details on configuring the event system.

When EVCTRL.COMPEIx is one, the event will start a comparison on COMPx after the start-up time delay. In normal mode, each comparator responds to its corresponding input event independently. For a pair of comparators in window mode, either comparator event will trigger a comparison on both comparators simultaneously.

38.6.13 Sleep Mode Operation

The Run in Standby bits in the Comparator x Control registers (COMPCTRLx.RUNSTDBY) control the behavior of the AC during standby sleep mode. Each RUNSTDBY bit controls one comparator. When the bit is zero, the comparator is disabled during sleep, but maintains its current configuration. When the bit is one, the comparator continues to operate during sleep. Note that when RUNSTDBY is zero, the analog blocks are powered off for the lowest power consumption. This necessitates a start-up time delay when the system returns from sleep.

For Window Mode operation, both comparators in a pair must have the same RUNSTDBY configuration.

When RUNSTDBY is one, any enabled AC interrupt source can wake up the CPU. The AC can also be used during sleep modes where the clock used by the AC is disabled, provided that the AC is still powered (not in shutdown). In this case, the behavior is slightly different and depends on the measurement mode, as listed in Table 38-1.

Table 38-1. Sleep Mode Operation

COMPCTRLx.MODE	RUNSTDBY=0	RUNSTDBY=1
0 (Continuous)	COMPx disabled	GCLK_AC stopped, COMPx enabled
1 (Single-shot)	COMPx disabled	GCLK_AC stopped, COMPx enabled only when triggered by an input event

38.6.13.1 Continuous Measurement during Sleep

When a comparator is enabled in continuous measurement mode and GCLK_AC is disabled during sleep, the comparator will remain continuously enabled and will function asynchronously. The current state of the comparator is asynchronously monitored for changes. If an edge matching the interrupt condition is found, GCLK_AC is started to register the interrupt condition and generate events. If the interrupt is enabled in the Interrupt Enable registers (INTENCLR/SET), the AC can wake up the device; otherwise GCLK_AC is disabled until the next edge detection. Filtering is not possible with this configuration.

Figure 38-9. Continuous Mode SleepWalking

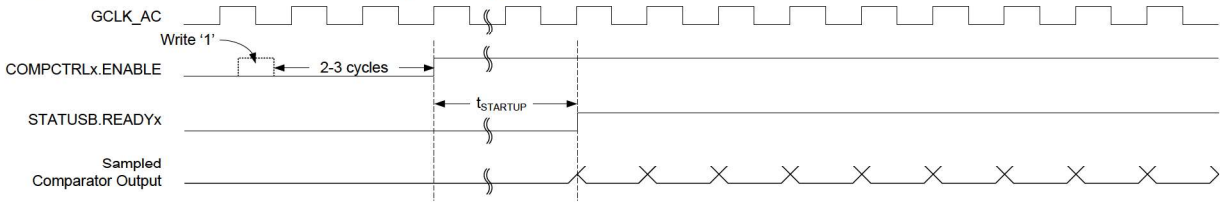

38.6.13.2 Single-Shot Measurement during Sleep

For low-power operation, event-triggered measurements can be performed during sleep modes. When the event occurs, the Power Manager will start GCLK_AC. The comparator is enabled, and after the start-up time has passed, a comparison is done, with filtering if desired, and the appropriate peripheral events and interrupts are also generated, as shown in Figure 38-10. The comparator and GCLK_AC are then disabled again automatically, unless configured to wake the system from sleep. Filtering is allowed with this configuration.

Figure 38-10. Single-Shot SleepWalking

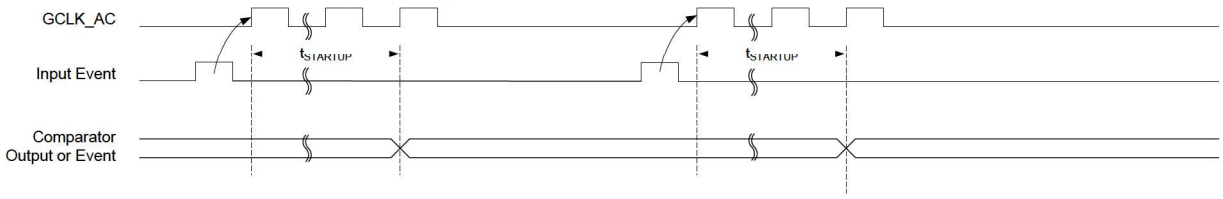

38.6.14 Synchronization

Due to asynchronicity between the main clock domain and the peripheral clock domains, some registers need to be synchronized when written or read.

The following bits are synchronized when written:

- Software Reset bit in control register (CTRLA.SWRST)
- Enable bit in control register (CTRLA.ENABLE)
- Enable bit in Comparator Control register (COMPCTRLn.ENABLE)

The following registers are synchronized when written:

- Window Control register (WINCTRL)

Required write-synchronization is denoted by the "Write-Synchronized" property in the register description.

38.7 Register Summary

Offset	Name	Bit Pos.	7	6	5	4	3	2	1	0
0x00	CTRLA	7:0							ENABLE	SWRST
0x01	CTRLB	7:0							START1	START0
0x02	EVCTRL	7:0				WINEO0			COMPEO1	COMPEO0
		15:8			INVEI1	INVEI0			COMPEI1	COMPEI0
0x04	INTENCLR	7:0				WIN0			COMP1	COMP0
0x05	INTENSET	7:0				WIN0			COMP1	COMP0
0x06	INTFLAG	7:0				WIN0			COMP1	COMP0
0x07	STATUSA	7:0			WSTATE0[1:0]				STATE1	STATE0
0x08	STATUSB	7:0							READY1	READY0
0x09	DBGCTRL	7:0								DBGRUN
0x0A	WINCTRL	7:0						WINTSEL0[1:0]		WEN0
0x0B	Reserved									
0x0C	SCALER0	7:0			VALUE[5:0]					
0x0D	SCALER1	7:0			VALUE[5:0]					
0x0E ... 0x0F	Reserved									
0x10	COMPCTRL0	7:0		RUNSTDBY		INTSEL[1:0]		SINGLE	ENABLE	
		15:8	SWAP	MUXPOS[2:0]				MUXNEG[2:0]		
		23:16					HYSTEN		SPEED[1:0]	
		31:24			OUT[1:0]			FLEN[2:0]		
0x14	COMPCTRL1	7:0		RUNSTDBY		INTSEL[1:0]		SINGLE	ENABLE	
		15:8	SWAP	MUXPOS[2:0]				MUXNEG[2:0]		
		23:16					HYSTEN		SPEED[1:0]	
		31:24			OUT[1:0]			FLEN[2:0]		
0x18 ... 0x1F	Reserved									
0x20	SYNCBUSY	7:0				COMPCTRL1	COMPCTRL0	WINCTRL	ENABLE	SWRST
		15:8								
		23:16								
		31:24								

38.7.1 Control A

Name: CTRLA
Offset: 0x00
Reset: 0x00
Property: PAC Write-Protection, Write-Synchronized Bits

Bit	7	6	5	4	3	2	1	0
							ENABLE	SWRST
Access							R/W	W
Reset							0	0

Bit 1 – ENABLE Enable
Note: This bit is write-synchronized: SYNCBUSY.ENABLE must be checked to ensure the CTRLA.ENABLE synchronization is complete.

Value	Description
0	The AC is disabled.
1	The AC is enabled. Each comparator must also be enabled individually by the Enable bit in the Comparator Control register (COMPCTRLn.ENABLE).

Bit 0 – SWRST Software Reset
Writing a '0' to this bit has no effect.
Writing a '1' to this bit resets all registers in the AC to their initial state, and the AC will be disabled.
Writing a '1' to CTRLA.SWRST will always take precedence, meaning that all other writes in the same write-operation will be discarded.
Note: This bit is write-synchronized: SYNCBUSY.SWRST must be checked to ensure the CTRLA.SWRST synchronization is complete.

Value	Description
0	There is no reset operation ongoing.
1	The reset operation is ongoing.

38.7.2 Control B

Name: CTRLB
Offset: 0x01
Reset: 0x00
Property: -

Bit	7	6	5	4	3	2	1	0
							START1	START0
Access							R/W	R/W
Reset							0	0

Bits 0, 1 – STARTx Comparator x Start Comparison
Writing a '0' to this field has no effect.
Writing a '1' to STARTx starts a single-shot comparison on COMPx if both the Single-Shot and Enable bits in the Comparator x Control Register are '1' (COMPCTRLx.SINGLE and COMPCTRLx.ENABLE). If comparator x is not enabled in single-shot mode, writing a '1' has no effect.
This bit always reads as zero.

38.7.3 Event Control

Name: EVCTRL
Offset: 0x02
Reset: 0x0000
Property: PAC Write-Protection, Enable-Protected

Bit	15	14	13	12	11	10	9	8
			INVEI1	INVEI0			COMPEI1	COMPEI0
Access			R/W	R/W			R/W	R/W
Reset			0	0			0	0

Bit	7	6	5	4	3	2	1	0
				WINEO0			COMPEO1	COMPEO0
Access				R/W			R/W	R/W
Reset				0			0	0

Bits 12, 13 – INVEIx Inverted Event Input Enable x

Value	Description
0	Incoming event is not inverted for comparator x.
1	Incoming event is inverted for comparator x.

Bits 8, 9 – COMPEIx Comparator x Event Input
Note that several actions can be enabled for incoming events. If several events are connected to the peripheral, the enabled action will be taken for any of the incoming events. There is no way to tell which of the incoming events caused the action.
These bits indicate whether a comparison will start or not on any incoming event.

Value	Description
0	Comparison will not start on any incoming event.
1	Comparison will start on any incoming event.

Bit 4 – WINEOx Window x Event Output Enable
These bits indicate whether the window x function can generate a peripheral event or not.

Value	Description
0	Window x Event is disabled.
1	Window x Event is enabled.

Bits 0, 1 – COMPEOx Comparator x Event Output Enable
These bits indicate whether the comparator x output can generate a peripheral event or not.

Value	Description
0	COMPx event generation is disabled.
1	COMPx event generation is enabled.

38.7.4 Interrupt Enable Clear

Name: INTENCLR
Offset: 0x04
Reset: 0x00
Property: PAC Write-Protection

This register allows the user to disable an interrupt without doing a read-modify-write operation. Changes in this register will also be reflected in the Interrupt Enable Set register (INTENSET).

Bit	7	6	5	4	3	2	1	0
				WIN0			COMP1	COMP0
Access				R/W			R/W	R/W
Reset				0			0	0

Bit 4 – WINx Window x Interrupt Enable
Reading this bit returns the state of the Window x interrupt enable.
Writing a '0' to this bit has no effect.
Writing a '1' to this bit disables the Window x interrupt.

Value	Description
0	The Window x interrupt is disabled.
1	The Window x interrupt is enabled.

Bits 0, 1 – COMPx Comparator x Interrupt Enable
Reading this bit returns the state of the Comparator x interrupt enable.
Writing a '0' to this bit has no effect.
Writing a '1' to this bit disables the Comparator x interrupt.

Value	Description
0	The Comparator x interrupt is disabled.
1	The Comparator x interrupt is enabled.

38.7.5 Interrupt Enable Set

Name: INTENSET
Offset: 0x05
Reset: 0x00
Property: PAC Write-Protection

This register allows the user to enable an interrupt without doing a read-modify-write operation. Changes in this register will also be reflected in the Interrupt Enable Clear register (INTENCLR).

Bit	7	6	5	4	3	2	1	0
				WIN0			COMP1	COMP0
Access				R/W			R/W	R/W
Reset				0			0	0

Bit 4 – WINx Window x Interrupt Enable
Reading this bit returns the state of the Window x interrupt enable.
Writing a '0' to this bit has no effect.
Writing a '1' to this bit enables the Window x interrupt.

Value	Description
0	The Window x interrupt is disabled.
1	The Window x interrupt is enabled.

Bits 0, 1 – COMPx Comparator x Interrupt Enable
Reading this bit returns the state of the Comparator x interrupt enable.
Writing a '0' to this bit has no effect.
Writing a '1' to this bit will set the Ready interrupt bit and enable the Ready interrupt.

Value	Description
0	The Comparator x interrupt is disabled.
1	The Comparator x interrupt is enabled.

38.7.6 Interrupt Flag Status and Clear

Name: INTFLAG
Offset: 0x06
Reset: 0x00
Property: –

Bit	7	6	5	4	3	2	1	0
				WIN0			COMP1	COMP0
Access				R/W			R/W	R/W
Reset				0			0	0

Bit 4 – WINx Window x
This flag is set according to the Window x Interrupt Selection bit group in the 37.7.11 WINCTRL register (WINCTRL.WINTSELx) and will generate an interrupt if INTENCLR/SET.WINx is also one.
Writing a '0' to this bit has no effect.
Writing a '1' to this bit clears the Window x interrupt flag.

Bits 0, 1 – COMPx Comparator x
Reading this bit returns the status of the Comparator x interrupt flag. If comparator x is not implemented, COMPx always reads as zero.
This flag is set according to the Interrupt Selection bit group in the Comparator x Control register (COMPCTRLx.INTSEL) and will generate an interrupt if INTENCLR/SET.COMPx is also one.
Writing a '0' to this bit has no effect.
Writing a '1' to this bit clears the Comparator x interrupt flag.

38.7.7 Status A

Name: STATUSA
Offset: 0x07
Reset: 0x00
Property: Read-Only

Bit	7	6	5	4	3	2	1	0
			WSTATE0[1:0]				STATE1	STATE0
Access			R	R			R	R
Reset			0	0			0	0

Bits 5:4 – WSTATE0[1:0] Window 0 Current State
These bits show the current state of the signal if the window 0 mode is enabled.

Value	Name	Description
0x0	ABOVE	Signal is above window
0x1	INSIDE	Signal is inside window
0x2	BELOW	Signal is below window
0x3		Reserved

Bits 0, 1 – STATEx Comparator x Current State
This bit shows the current state of the output signal from COMPx. STATEx is valid only when STATUSB.READYx is one.

38.7.8 Status B

Name: STATUSB
Offset: 0x08
Reset: 0x00
Property: Read-Only

Bit	7	6	5	4	3	2	1	0
							READY1	READY0
Access							R	R
Reset							0	0

Bits 0, 1 – READYx Comparator x Ready
This bit is cleared when the comparator x output is not ready.
This bit is set when the comparator x output is ready.
If comparator x is not implemented, READYx always reads as zero.

38.7.9 Debug Control

Name: DBGCTRL
Offset: 0x09
Reset: 0x00
Property: PAC Write-Protection

Bit	7	6	5	4	3	2	1	0
								DBGRUN
Access								R/W
Reset								0

Bit 0 – DBGRUN Debug Run
This bit is reset by a system software reset.
This bits controls the functionality when the CPU is halted by an external debugger.

Value	Description
0	The AC is halted when the CPU is halted by an external debugger. Any on-going comparison will complete.
1	The AC continues normal operation when the CPU is halted by an external debugger.

38.7.10 Window Control

Name: WINCTRL
Offset: 0x0A
Reset: 0x00
Property: PAC Write-Protection, Write-Synchronized

Note: This register is write-synchronized: SYNCBUSY.WINCTRL must be checked to ensure the WINCTRL register synchronization is complete.

Bit	7	6	5	4	3	2	1	0
						WINTSEL0[1:0]		WEN0
Access						R/W	R/W	R/W
Reset						0	0	0

Bits 2:1 – WINTSEL0[1:0] Window 0 Interrupt Selection
These bits configure the interrupt mode for the comparator window 0 mode.

Value	Name	Description
0x0	ABOVE	Interrupt on signal above window
0x1	INSIDE	Interrupt on signal inside window
0x2	BELOW	Interrupt on signal below window
0x3	OUTSIDE	Interrupt on signal outside window

Bit 0 – WEN0 Window 0 Mode Enable

Value	Description
0	Window mode is disabled for comparators 0 and 1.
1	Window mode is enabled for comparators 0 and 1.

38.7.11 Scaler n

Name: SCALERn
Offset: 0x0C + n*0x01 [n=0..1]
Reset: 0x00
Property: Write-Protected

Bit	7	6	5	4	3	2	1	0
			VALUE[5:0]					
Access			R/W	R/W	R/W	R/W	R/W	R/W
Reset			0	0	0	0	0	0

Bits 5:0 – VALUE[5:0] Scaler Value
These bits define the scaling factor for channel n of the V_{DD} voltage scaler. The output voltage, V_{SCALE}, is:

$$V_{SCALE} = \frac{V_{DD} \cdot (VALUE+1)}{64}$$

38.7.12 Comparator Control n

Name: COMPCTRL
Offset: 0x10 + n*0x04 [n=0..1]
Reset: 0x00000000
Property: PAC Write-Protection, Write-Synchronized

Bit	31	30	29	28	27	26	25	24
			OUT[1:0]			FLEN[2:0]		
Access			R/W	R/W		R/W	R/W	R/W
Reset			0	0		0	0	0

Bit	23	22	21	20	19	18	17	16
					HYSTEN		SPEED[1:0]	
Access					R/W		R/W	R/W
Reset					0		0	0

Bit	15	14	13	12	11	10	9	8
	SWAP	MUXPOS[2:0]				MUXNEG[2:0]		
Access	R/W	R/W	R/W	R/W		R/W	R/W	R/W
Reset	0	0	0	0		0	0	0

Bit	7	6	5	4	3	2	1	0
		RUNSTDBY		INTSEL[1:0]		SINGLE	ENABLE	
Access		R/W		R/W	R/W	R/W	R/W	
Reset		0		0	0	0	0	

Bits 29:28 – OUT[1:0] Output
These bits configure the output selection for comparator n. COMPCTRLn.OUT can be written only while COMPCTRLn.ENABLE is zero.
Note: For internal use of the comparison results by the CCL, this bit must be 0x1 or 0x2.

These bits are not synchronized.

Value	Name	Description
0x0	OFF	The output of COMPn is not routed to the COMPn I/O port
0x1	ASYNC	The asynchronous output of COMPn is routed to the COMPn I/O port
0x2	SYNC	The synchronous output (including filtering) of COMPn is routed to the COMPn I/O port
0x3	N/A	Reserved

Bits 26:24 – FLEN[2:0] Filter Length
These bits configure the filtering for comparator n. COMPCTRLn.FLEN can only be written while COMPCTRLn.ENABLE is zero.
These bits are not synchronized.

Value	Name	Description
0x0	OFF	No filtering
0x1	MAJ3	3-bit majority function (2 of 3)
0x2	MAJ5	5-bit majority function (3 of 5)
0x3-0x7	N/A	Reserved

Bit 19 – HYSTEN Hysteresis Enable
This bit indicates the hysteresis mode of comparator n. Hysteresis is available only for continuous mode (COMPCTRLn.SINGLE=0).
This bit is not synchronized.

Value	Description
0	Hysteresis is disabled.
1	Hysteresis is enabled.

Bits 17:16 – SPEED[1:0] Speed Selection
This bit indicates the speed/propagation delay mode of comparator n. COMPCTRLn.SPEED can be written only while COMPCTRLn.ENABLE is zero.
These bits are not synchronized.

Value	Name	Description
0x0	LOW	Low speed
0x3	HIGH	High speed

Bit 15 – SWAP Swap Inputs and Invert
This bit swaps the positive and negative inputs to COMPn and inverts the output. This function can be used for offset cancellation. COMPCTRLn.SWAP can be written only while COMPCTRLn.ENABLE is zero.
These bits are not synchronized.

Value	Description
0	The output of MUXPOS connects to the positive input, and the output of MUXNEG connects to the negative input.
1	The output of MUXNEG connects to the positive input, and the output of MUXPOS connects to the negative input.

Bits 14:12 – MUXPOS[2:0] Positive Input Mux Selection
These bits select which input will be connected to the positive input of comparator n. COMPCTRLn.MUXPOS can be written only while COMPCTRLn.ENABLE is zero.
These bits are not synchronized.

Value	Name	Description
0x0	PIN0	I/O pin 0
0x1	PIN1	I/O pin 1
0x2	PIN2	I/O pin 2
0x3	PIN3	I/O pin 3
0x4	VSCALE	VDD scaler
0x5-0x7		Reserved

Bits 10:8 – MUXNEG[2:0] Negative Input Mux Selection
These bits select which input will be connected to the negative input of comparator n. COMPCTRLn.MUXNEG can only be written while COMPCTRLn.ENABLE is zero.
These bits are not synchronized.

Value	Name	Description
0x0	PIN0	I/O pin 0
0x1	PIN1	I/O pin 1
0x2	PIN2	I/O pin 2
0x3	PIN3	I/O pin 3
0x4	GND	Ground
0x5	VSCALE	VDD scaler
0x6	INTREF	Internal voltage reference, supplied by the bandgap (refer to SUPC.VREF.SEL for voltage level information)
0x7	DAC	DAC output

Bit 6 – RUNSTDBY Run in Standby
This bit controls the behavior of the comparator during standby sleep mode.
This bit is not synchronized

Value	Description
0	The comparator is disabled during sleep.
1	The comparator continues to operate during sleep.

Bits 4:3 – INTSEL[1:0] Interrupt Selection
These bits select the condition for comparator n to generate an interrupt or event. COMPCTRLn.INTSEL can be written only while COMPCTRLn.ENABLE is zero.
These bits are not synchronized.

Value	Name	Description
0x0	TOGGLE	Interrupt on comparator output toggle
0x1	RISING	Interrupt on comparator output rising
0x2	FALLING	Interrupt on comparator output falling
0x3	EOC	Interrupt on end of comparison (single-shot mode only)

Bit 2 – SINGLE Single-Shot Mode
This bit determines the operation of comparator n. COMPCTRLn.SINGLE can be written only while COMPCTRLn.ENABLE is zero.
These bits are not synchronized.

Value	Description
0	Comparator n operates in continuous measurement mode.
1	Comparator n operates in single-shot mode.

Bit 1 – ENABLE Enable
Writing a zero to this bit disables comparator n.
Writing a one to this bit enables comparator n.
Due to synchronization, there is delay from updating the register until the comparator is enabled/disabled. The value written to COMPCTRLn.ENABLE will read back immediately after being written. SYNCBUSY.COMPCTRLn is set. SYNCBUSY.COMPCTRLn is cleared when the peripheral is enabled/disabled.
Writing a one to COMPCTRLn.ENABLE will prevent further changes to the other bits in COMPCTRLn. These bits remain protected until COMPCTRLn.ENABLE is written to zero and the write is synchronized.

38.7.13 Synchronization Busy

Name: SYNCBUSY
Offset: 0x20
Reset: 0x00000000
Property: Read-Only

Bit	31	30	29	28	27	26	25	24
Access								
Reset								

Bit	23	22	21	20	19	18	17	16
Access								
Reset								

Bit	15	14	13	12	11	10	9	8
Access								
Reset								

Bit	7	6	5	4	3	2	1	0
				COMPCTRL1	COMPCTRL0	WINCTRL	ENABLE	SWRST
Access				R	R	R	R	R
Reset				0	0	0	0	0

Bits 3, 4 – COMPCTRLx COMPCTRLx Synchronization Busy [x = 1..0]
This bit is cleared when the synchronization of the COMPCTRLx register between the clock domains is complete.
This bit is set when the synchronization of the COMPCTRLx register between clock domains is started.

Bit 2 – WINCTRL WINCTRL Synchronization Busy
This bit is cleared when the synchronization of the WINCTRL register between the clock domains is complete.
This bit is set when the synchronization of the WINCTRL register between clock domains is started.

Bit 1 – ENABLE Enable Synchronization Busy
This bit is cleared when the synchronization of the CTRLA.ENABLE bit between the clock domains is complete.
This bit is set when the synchronization of the CTRLA.ENABLE bit between clock domains is started.

Bit 0 – SWRST Software Reset Synchronization Busy
This bit is cleared when the synchronization of the CTRLA.SWRST bit between the clock domains is complete.
This bit is set when the synchronization of the CTRLA.SWRST bit between clock domains is started.

39. Digital-to-Analog Converter (DAC)

39.1 Overview

The Digital-to-Analog Converter (DAC) converts a digital value to a voltage. The DAC has one channel with 10-bit resolution, and it is capable of converting up to 350,000 samples per second (350 ksps).

39.2 Features

- DAC with 10-bit resolution
- Up to 350 ksps conversion rate
- Hardware support for 14-bit using dithering
- Multiple trigger sources
- High-drive capabilities
- Output can be used as input to the Analog Comparator (AC), SDADC, or ADC
- DMA support

39.3 Block Diagram

Figure 39-1. DAC Block Diagram

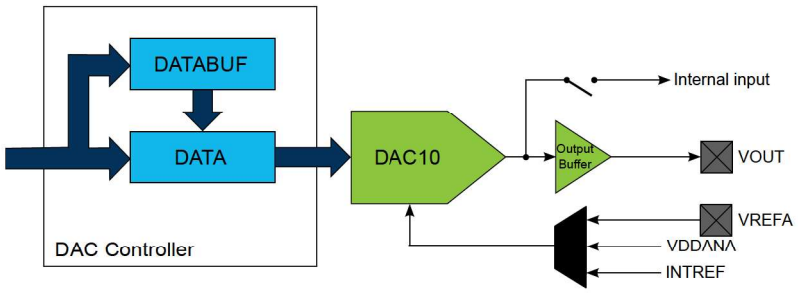

39.4 Signal Description

Signal Name	Type	Description
VOUT	Analog output	DAC output
VREFA	Analog input	External reference

For further information, refer to the 4. Pinout and Packaging.

39.5 Peripheral Dependencies

Peripheral	Base Address	IRQ	AHB CLK	APB CLK	Generic CLK	PAC		Events		DMA	Sleep Walking
			Enabled at reset	Enabled at reset	Index	Index	Prot at reset	User	Generator	Index	
DAC	0x42005400	24	-	N	31	21	N	36: START	76: EMPTY	39: EMPTY	Y

39.6 Functional Description

39.6.1 Principle of Operation

The DAC converts the digital value located in the Data register (DATA) into an analog voltage on the DAC output (VOUT).

A conversion is started when new data is written to the Data register. The resulting voltage is available on the DAC output after the conversion time. A conversion can also be started by input events from the Event System.

39.6.2 Basic Operation

39.6.2.1 Initialization

The following registers are enable-protected, meaning they can only be written when the DAC is disabled (CTRLA.ENABLE is zero):

- Control B register (CTRLB)
- Event Control register (EVCTRL)

Enable-protection is denoted by the Enable-Protected property in the register description.

Before enabling the DAC, it must be configured by selecting the voltage reference using the Reference Selection bits in the Control B register (CTRLB.REFSEL).

39.6.2.2 Enabling, Disabling and Resetting

The DAC Controller is enabled by writing a '1' to the Enable bit in the Control A register (CTRLA.ENABLE). The DAC Controller is disabled by writing a '0' to CTRLA.ENABLE.

The DAC Controller is reset by writing a '1' to the Software Reset bit in the Control A register (CTRLA.SWRST). All registers in the DAC will be reset to their initial state, and the DAC Controller will be disabled. Refer to the CTRLA register for details.

39.6.2.3 Enabling the Output Buffer

To enable the DAC output on the V_{OUT} pin, the output driver must be enabled by writing a one to the External Output Enable bit in the Control B register (CTRLB.EOEN).

The DAC output buffer provides a high-drive-strength output, and is capable of driving both resistive and capacitive loads. To minimize power consumption, the output buffer should be enabled only when external output is needed.

39.6.2.4 Digital-to-Analog Conversion (DAC)

The DAC converts a digital value (stored in the DATA register) into an analog voltage. The conversion range is between GND and the selected DAC voltage reference. The default voltage reference is the internal reference voltage. Other voltage reference options are the analog supply voltage (VDDANA) and the external voltage reference (VREFA). The voltage reference is selected by writing to the Reference Selection bits in the Control B register (CTRLB.REFSEL).

The output voltage from the DAC can be calculated using the following formula:

$$V_{\mathrm{OUT}} = \frac{\mathrm{DATA}}{0x3\mathrm{FF}} \cdot \mathrm{VREF}$$

A new conversion starts as soon as a new value is loaded into DATA. DATA can either be loaded via the APB bus during a CPU write operation, using DMA, or from the DATABUF register when a START event occurs. Refer to 39.6.5 Events for details. As there is no automatic indication that a conversion is done, the sampling period must be greater than or equal to the specified conversion time.

For further information, refer to the Supply Controller - SUPC.

39.6.3 DMA Operation

The DAC generates the following DMA request:

- Data Buffer Empty (EMPTY): The request is set when data is transferred from DATABUF to the internal data buffer of DAC. The request is cleared when DATABUF register is written, or by writing a one to the EMPTY bit in the Interrupt Flag register (INTFLAG.EMPTY).

For each Start Conversion event, DATABUF is transferred into DATA and the conversion starts. When DATABUF is empty, the DAC generates the DMA request for new data. As DATABUF is initially empty, a DMA request is generated whenever the DAC is enabled.

If the CPU accesses the registers that are the source of a DMA request set/clear condition, the DMA request can be lost or the DMA transfer can be corrupted, if enabled.

39.6.4 Interrupts

The DAC Controller has the following interrupt sources:

- Data Buffer Empty (EMPTY): Indicates that the internal data buffer of the DAC is empty.
- Underrun (UNDERRUN): Indicates that the internal data buffer of the DAC is empty and a DAC start of conversion event occurred. Refer to 39.6.5 Events for details.

Each interrupt source has an interrupt flag associated with it. The interrupt flag in the Interrupt Flag Status and Clear register (INTFLAG) is set when the interrupt condition occurs. Each interrupt can be individually enabled by writing a one to the corresponding bit in the Interrupt Enable Set register (INTENSET), and disabled by writing a one to the corresponding bit in the Interrupt Enable Clear register (INTENCLR). As both INTENSET and INTENCLR always reflect the same value, the status of interrupt enablement can be read from either register.

An interrupt request is generated when the interrupt flag is set and the corresponding interrupt is enabled. The interrupt request remains active until the interrupt flag is cleared, the interrupt is disabled or the DAC is reset. See INTFLAG register for details on how to clear interrupt flags.

All interrupt requests from the peripheral are ORed together on system level to generate one combined interrupt request to the 9.2 Nested Vector Interrupt Controller. The user must read the INTFLAG register to determine which interrupt condition is present.

Note that interrupts must be globally enabled for interrupt requests to be generated.

39.6.5 Events

The DAC Controller can generate the following output events:

- Data Buffer Empty (EMPTY): Generated when the internal data buffer of the DAC is empty. Refer to 39.6.3 DMA Operation for details.

Writing a '1' to an Event Output bit in the Event Control register (EVCTRL.EMPTYEO) enables the corresponding output event. Writing a '0' to this bit disables the corresponding output event.

The DAC can take the following action on an input event:

- Start Conversion (START): DATABUF value is transferred into DATA as soon as the DAC is ready for the next conversion, and then conversion is started. START is considered as asynchronous to GCLK_DAC thus it is resynchronized in DAC Controller. Refer to 39.6.2.4 Digital-to-Analog Conversion (DAC) for details.

Writing a '1' to an Event Input bit in the Event Control register (EVCTRL.STARTEI) enables the corresponding action on an input event. Writing a '0' to this bit disables the corresponding action on input event.

Note: When several events are connected to the DAC Controller, the enabled action will be taken on any of the incoming events.

By default, DAC Controller detects rising edge events. Falling edge detection can be enabled by writing a '1' to EVCTRL.INVEIx.

For further information, refer to the 28. Event System (EVSYS).

39.6.6 Sleep Mode Operation

The generic clock for the DAC is running in idle sleep mode. If the Run In Standby bit in the Control A register (CTRLA.RUNSTDBY) is one, the DAC output buffer will keep its value in standby sleep mode. If CTRLA.RUNSTDBY is zero, the DAC output buffer will be disabled in standby sleep mode. Additionally, when the CTRLA.RUNTDBY is '0', upon exiting from STANDBY, the empty interrupt flag (INTFLAG.EMPTY) will be set if a conversion was ongoing at STANDBY entry. This can be ignored and cleared when necessary.

39.6.7 Synchronization

Due to the asynchronicity between main clock domain and the peripheral clock domains, some registers need to be synchronized when written or read. A register can require:

- Synchronization when written
- Synchronization when read
- Synchronization when written and read
- No synchronization

When executing an operation that requires synchronization, the corresponding status bit in the Synchronization Busy register (SYNCBUSY) will be set immediately, and cleared when synchronization is complete.

If an operation that requires synchronization is executed while its busy bit is one, the operation is discarded and an error is generated.

The following bits need synchronization when written:

- Software Reset bit in the Control A register (CTRLA.SWRST)
- Enable bit in the Control A register (CTRLA.ENABLE)
- All bits in the Data register (DATA)
- All bits in the Data Buffer register (DATABUF)

Write-synchronization is denoted by the Write-Synchronized property in the register description.

No bits need synchronization when read.

39.6.8 Additional Features

39.6.8.1 DAC as an Internal Reference

The DAC output can be internally enabled as input to the analog comparator. This is enabled by writing a one to the Internal Output Enable bit in the Control B register (CTRLB.IOEN). It is possible to have the internal and external output enabled simultaneously.

The DAC output can also be enabled as input to the Analog-to-Digital Converter. In this case, the output buffer must be enabled.

39.6.8.2 Data Buffer

The Data Buffer register (DATABUF) and the Data register (DATA) are linked together to form a two-stage FIFO. The DAC uses the Start Conversion event to load data from DATABUF into DATA and start a new conversion. The Start Conversion event is enabled by writing a one to the Start Event Input bit in the Event Control register (EVCTRL.STARTEI). If a Start Conversion event occurs when DATABUF is empty, an Underrun interrupt request is generated if the Underrun interrupt is enabled.

The DAC can generate a Data Buffer Empty event when DATABUF becomes empty and new data can be loaded to the buffer. The Data Buffer Empty event is enabled by writing a one to the Empty Event Output bit in the Event Control register (EVCTRL.EMPTYEO). A Data Buffer Empty interrupt request is generated if the Data Buffer Empty interrupt is enabled.

39.6.8.3 Voltage Pump

When the DAC is used at operating voltages lower than 2.5V, the voltage pump must be enabled. This enabling is done automatically, depending on operating voltage.

The voltage pump can be disabled by writing a one to the Voltage Pump Disable bit in the Control B register (CTRLB.VPD). This can be used to reduce power consumption when the operating voltage is above 2.5V.

The voltage pump uses the asynchronous GCLK_DAC clock, and requires that the clock frequency be at least four times higher than the sampling period.

39.6.8.4 Dithering mode

Dithering is enabled by setting CTRLB.DITHER to 1. In dithering mode, DATA is a 14-bit unsigned value where DATA[13:4] is the 10-bit data converted by DAC and DATA[3:0] represents the dither bits, used for minimizing the quantization error. The principle is to make 16 sub-conversions of the DATA[13:4] value or the (DATA[13:4] + 1) value, so that by averaging those values, the conversion result of the 14-bit value (DATA[13:0]) has improved accuracy due to minimized quantization error.

To use the dithering feature, EVSYS is used for generating a periodic STARTEI. And the STARTEI event must be configured (EVCTRL.STARTEI = 1) to generate 16 events for each DATA[13:0] conversion, and DATABUFx must be loaded every 16 DAC conversions. EMPTYx event and DMA request are therefore generated every 16 DATABUF to DATA transfers. Using the DMA with dithering is optional. If the DMA is not used, it is required to poll the INTFLAG.EMTPY flag, or use an interrupt on EMPTY to add a new value in DATABUF.

Note that the input value for DAC is positioned in the DATA register based on CTRLB.LEFTADJ as shown in the following figure. Refer to 41.8.8 DATA register description for further details. If LEFTADJ = 0: the user writes DATA[13:4], and the dithering function will take care of bit DATA[3:0] during the 16 sub-conversions.

If LEFTADJ = 1: the user writes DATA[15:6], and the dithering function will take care of bit DATA[5:2] during the 16 sub-conversions.

Following timing diagram shows examples with DATA[15:0] = 0x1210 then DATA[15:0] = 0x12E0 and CTRLB.LEFTADJ=1.

Figure 39-2. DAC Conversions in Dithering Mode (CTRLB.LEFTADJ=1)

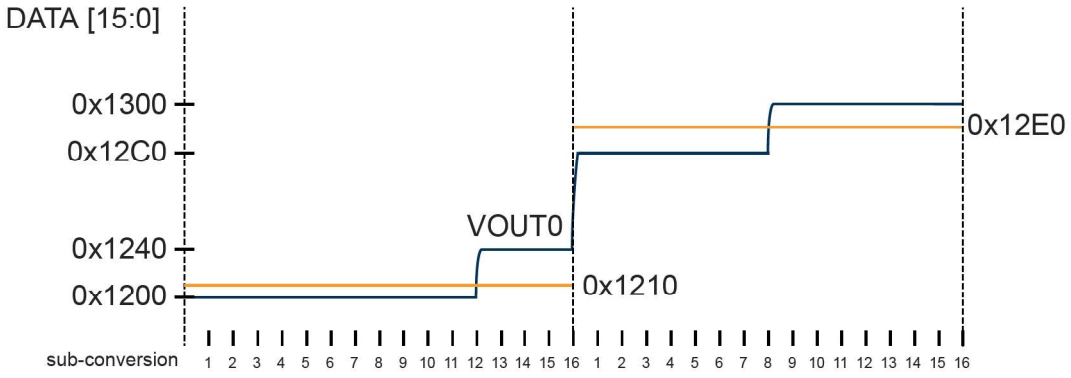

39.7 Register Summary

Offset	Name	Bit Pos.	7	6	5	4	3	2	1	0
0x00	CTRLA	7:0		RUNSTDBY					ENABLE	SWRST
0x01	CTRLB	7:0	REFSEL[1:0]		DITHER		VPD	LEFTADJ	IOEN	EOEN
0x02	EVCTRL	7:0						INVEI	EMPTYEO	STARTEI
0x03	Reserved									
0x04	INTENCLR	7:0							EMPTY	UNDERRUN
0x05	INTENSET	7:0							EMPTY	UNDERRUN
0x06	INTFLAG	7:0							EMPTY	UNDERRUN
0x07	STATUS	7:0								READY
0x08	DATA	7:0	DATA[7:0]							
		15:8	DATA[15:8]							
0x0A ... 0x0B	Reserved									
0x0C	DATABUF	7:0	DATABUF[7:0]							
		15:8	DATABUF[15:8]							
0x0E ... 0x0F	Reserved									
0x10	SYNCBUSY	7:0					DATABUF	DATA	ENABLE	SWRST
		15:8								
		23:16								
		31:24								
0x14	DBGCTRL	7:0								DBGRUN

39.7.1 Control A

Name: CTRLA
Offset: 0x00
Reset: 0x00
Property: PAC Write-Protection, Write-Synchronized Bits

Bit	7	6	5	4	3	2	1	0
		RUNSTDBY					ENABLE	SWRST
Access		R/W					R/W	R/W
Reset		0					0	0

Bit 6 – RUNSTDBY Run in Standby
Note: This bit is not synchronized

Value	Description
0	The DAC output buffer is disabled in standby sleep mode.
1	The DAC output buffer can be enabled in standby sleep mode.

Bit 1 – ENABLE Enable DAC Controller
Note: This bit is write-synchronized: SYNCBUSY.ENABLE must be checked to ensure the CTRLA.ENABLE synchronization is complete.

Value	Description
0	The peripheral is disabled or being disabled.
1	The peripheral is enabled or being enabled.

Bit 0 – SWRST Software Reset
Writing '0' to this bit has no effect.
Writing '1' to this bit resets all registers in the DAC to their initial state, and the DAC will be disabled.
Writing a '1' to CTRLA.SWRST will always take precedence, meaning that all other writes in the same write-operation will be discarded.
Note: This bit is write-synchronized: SYNCBUSY.SWRST must be checked to ensure the CTRLA.SWRST synchronization is complete.

Value	Description
0	There is no reset operation ongoing.
1	The reset operation is ongoing.

39.7.2 Control B

Name: CTRLB
Offset: 0x01
Reset: 0x00
Property: PAC Write-Protection, Enable-Protected

Bit	7	6	5	4	3	2	1	0
	REFSEL[1:0]		DITHER		VPD	LEFTADJ	IOEN	EOEN
Access	R/W	R/W	R/W		R/W	R/W	R/W	R/W
Reset	0	0	0		0	0	0	0

Bits 7:6 – REFSEL[1:0] Reference Selection
This bit field selects the Reference Voltage for the DAC.

Value	Name	Description
0x0	INTREF	Internal voltage reference, supplied by the bandgap (refer to SUPC.VREF.SEL for voltage level information)
0x1	VDDANA	Analog voltage supply
0x2	VREFA	External Voltage Reference
0x3		Reserved

Bit 5 – DITHER Dithering Mode
This bit controls dithering operation according to 39.6.8.4 Dithering mode.

Value	Description
0	Dithering mode is disabled.
1	Dithering mode is enabled.

Bit 3 – VPD Voltage Pump Disabled
This bit controls the behavior of the voltage pump.

Value	Description
0	Voltage pump is turned on/off automatically
1	Voltage pump is disabled.

Bit 2 – LEFTADJ Left-Adjusted Data
This bit controls how the 10-bit conversion data is adjusted in the Data and Data Buffer registers.

Value	Description
0	DATA and DATABUF registers are right-adjusted.
1	DATA and DATABUF registers are left-adjusted.

Bit 1 – IOEN Internal Output Enable

Value	Description
0	Internal DAC output not enabled.
1	Internal DAC output enabled to be used by the AC or ADC.

Bit 0 – EOEN External Output Enable

Value	Description
0	The DAC output is turned off.
1	The high-drive output buffer drives the DAC output to the V_{OUT} pin.

39.7.3 Event Control

Name: EVCTRL
Offset: 0x02
Reset: 0x00
Property: PAC Write-Protection

Bit	7	6	5	4	3	2	1	0
						INVEI	EMPTYEO	STARTEI
Access						R/W	R/W	R/W
Reset						0	0	0

Bit 2 – INVEI Enable Inversion of Start Event Input
This bit defines the edge detection of the input event for STARTEI.

Value	Description
0	Rising edge.
1	Falling edge.

Bit 1 – EMPTYEO Data Buffer Empty Event Output
This bit indicates whether or not the Data Buffer Empty event is enabled and will be generated when the Data Buffer register is empty.

Value	Description
0	Data Buffer Empty event is disabled and will not be generated.
1	Data Buffer Empty event is enabled and will be generated.

Bit 0 – STARTEI Start Conversion Event Input
This bit indicates whether or not the Start Conversion event is enabled and data are loaded from the Data Buffer register to the Data register upon event reception.

Value	Description
0	A new conversion will not be triggered on any incoming event.
1	A new conversion will be triggered on any incoming event.

39.7.4 Interrupt Enable Clear

Name: INTENCLR
Offset: 0x04
Reset: 0x00
Property: PAC Write-Protection

This register allows the user to disable an interrupt without doing a read-modify-write operation. Changes in this register will also be reflected in the Interrupt Enable Set register (INTENSET).

Bit	7	6	5	4	3	2	1	0
							EMPTY	UNDERRUN
Access							R/W	R/W
Reset							0	0

Bit 1 – EMPTY Data Buffer Empty Interrupt Enable
Writing a '0' to this bit has no effect.
Writing a '1' to this bit will clear the Data Buffer Empty Interrupt Enable bit, which disables the Data Buffer Empty interrupt.

Value	Description
0	The Data Buffer Empty interrupt is disabled.
1	The Data Buffer Empty interrupt is enabled.

Bit 0 – UNDERRUN Underrun Interrupt Enable
Writing a '0' to this bit has no effect.
Writing a '1' to this bit will clear the Data Buffer Underrun Interrupt Enable bit, which disables the Data Buffer Underrun interrupt.

Value	Description
0	The Data Buffer Underrun interrupt is disabled.
1	The Data Buffer Underrun interrupt is enabled.

39.7.5 Interrupt Enable Set

Name: INTENSET
Offset: 0x05
Reset: 0x00
Property: PAC Write-Protection

This register allows the user to disable an interrupt without doing a read-modify-write operation. Changes in this register will also be reflected in the Interrupt Enable Clear register (INTENCLR).

Bit	7	6	5	4	3	2	1	0
							EMPTY	UNDERRUN
Access							R/W	R/W
Reset							0	0

Bit 1 – EMPTY Data Buffer Empty Interrupt Enable
Writing a '0' to this bit has no effect.
Writing a '1' to this bit will set the Data Buffer Empty Interrupt Enable bit, which enables the Data Buffer Empty interrupt.

Value	Description
0	The Data Buffer Empty interrupt is disabled.
1	The Data Buffer Empty interrupt is enabled.

Bit 0 – UNDERRUN Underrun Interrupt Enable
Writing a '0' to this bit has no effect.
Writing a '1' to this bit will set the Data Buffer Underrun Interrupt Enable bit, which enables the Data Buffer Underrun interrupt.

Value	Description
0	The Data Buffer Underrun interrupt is disabled.
1	The Data Buffer Underrun interrupt is enabled.

39.7.6 Interrupt Flag Status and Clear

Name: INTFLAG
Offset: 0x06
Reset: 0x00
Property: -

Bit	7	6	5	4	3	2	1	0
							EMPTY	UNDERRUN
Access							R/W	R/W
Reset							0	0

Bit 1 – EMPTY Data Buffer Empty
This flag is cleared by writing a '1' to it or by writing new data to DATABUF.
This flag is set when data is transferred from DATABUF to DATA, and the DAC is ready to receive new data in DATABUF, and will generate an interrupt request if INTENCLR/SET.EMPTY is one.
Writing a '0' to this bit has no effect.
Writing a '1' to this bit will clear the Data Buffer Empty interrupt flag.
If the DAC is not set to run in standby sleep mode (CTRLA.RUNSTDBY=0) then the Data Buffer Empty (INTFLAG.EMPTY) bit will be set when exiting standby sleep mode. This flag can be ignored and cleared when necessary.

Bit 0 – UNDERRUN Underrun
This flag is cleared by writing a '1' to it.
This flag is set when a start conversion event occurs when DATABUF is empty, and will generate an interrupt request if INTENCLR/SET.UNDERRUN is one.
Writing a '0' to this bit has no effect.
Writing a '1' to this bit will clear the Underrun interrupt flag.

39.7.7 Status

Name: STATUS
Offset: 0x07
Reset: 0x00
Property: -

Bit	7	6	5	4	3	2	1	0
								READY
Access								R
Reset								0

Bit 0 – READY DAC Ready

Value	Description
0	DAC is not ready for conversion.
1	Startup time has elapsed, DAC is ready for conversion.

39.7.8 Data DAC

Name: DATA
Offset: 0x08
Reset: 0x0000
Property: PAC Write-Protection, Write-Synchronized

Note: This register is write-synchronized: SYNCBUSY.DATA must be checked to ensure the DATA register synchronization is complete.

Bit	15	14	13	12	11	10	9	8
	DATA[15:8]							
Access	W	W	W	W	W	W	W	W
Reset	0	0	0	0	0	0	0	0

Bit	7	6	5	4	3	2	1	0
	DATA[7:0]							
Access	W	W	W	W	W	W	W	W
Reset	0	0	0	0	0	0	0	0

Bits 15:0 – DATA[15:0] Data value to be converted
DATA register contains the 10-bit value that is converted to a voltage by the DAC. The adjustment of these 10 bits within the 16-bit register is controlled by CTRLB.LEFTADJ.
Four additional bits are also used for the dithering feature according to 39.6.8.4 Dithering mode.

Table 39-1. Valid Data Bits

CTRLB.DITHER	CTRLB.LEFTADJ	DATA	Description
0	0	DATA[9:0]	Right adjusted, 10-bits
0	1	DATA[15:6]	Left adjusted, 10-bits
1	0	DATA[13:4], DATA[3:0]	Right adjusted, 14-bits
1	1	DATA[15:6], DATA[5:2]	Left adjusted, 14-bits

39.7.9 Data Buffer

Name: DATABUF
Offset: 0x0C
Reset: 0x0000
Property: Write-Synchronized

Note: This register is write-synchronized: SYNCBUSY.DATABUF must be checked to ensure the DATABUF register synchronization is complete.

Bit	15	14	13	12	11	10	9	8
	DATABUF[15:8]							
Access	W	W	W	W	W	W	W	W
Reset	0	0	0	0	0	0	0	0

Bit	7	6	5	4	3	2	1	0
	DATABUF[7:0]							
Access	W	W	W	W	W	W	W	W
Reset	0	0	0	0	0	0	0	0

Bits 15:0 – DATABUF[15:0] Data Buffer
DATABUF contains the value to be transferred into DATA register.

39.7.10 Synchronization Busy

Name: SYNCBUSY
Offset: 0x10
Reset: 0x00000000
Property: -

Bit	31	30	29	28	27	26	25	24
Access								
Reset								

Bit	23	22	21	20	19	18	17	16
Access								
Reset								

Bit	15	14	13	12	11	10	9	8
Access								
Reset								

Bit	7	6	5	4	3	2	1	0
					DATABUF	DATA	ENABLE	SWRST
Access					R	R	R	R
Reset					0	0	0	0

Bit 3 – DATABUF Data Buffer DAC0
This bit is set when DATABUF register is written.
This bit is cleared when DATABUF synchronization is completed.

Value	Description
0	No ongoing synchronized access.
1	Synchronized access is ongoing.

Bit 2 – DATA Data
This bit is set when DATA register is written.
This bit is cleared when DATA synchronization is completed.

Value	Description
0	No ongoing synchronized access.
1	Synchronized access is ongoing.

Bit 1 – ENABLE DAC Enable Status
This bit is set when CTRLA.ENABLE bit is written.
This bit is cleared when CTRLA.ENABLE synchronization is completed.

Value	Description
0	No ongoing synchronization.
1	Synchronization is ongoing.

Bit 0 – SWRST Software Reset
This bit is set when CTRLA.SWRST bit is written.
This bit is cleared when CTRLA.SWRST synchronization is completed.

Value	Description
0	No ongoing synchronization.
1	Synchronization is ongoing.

39.7.11 Debug Control

Name: DBGCTRL
Offset: 0x14
Reset: 0x00
Property: PAC Write-Protection

Bit	7	6	5	4	3	2	1	0
								DBGRUN
Access								
Reset								0

Bit 0 – DBGRUN Debug Run
This bit is reset by a system software reset.
This bits controls the functionality when the CPU is halted by an external debugger.

Value	Description
0	The DAC is halted when the CPU is halted by an external debugger. Any ongoing conversion will complete.
1	The DAC continues normal operation when the CPU is halted by an external debugger.

40. Temperature Sensor (TSENS)

40.1 Overview

The TSENS can be used to measure the operating temperature of the device.

40.2 Features

- Measures temperature
- A selectable reference clock source

40.3 Block Diagram

Figure 40-1. Temperature Sensor Block Diagram.

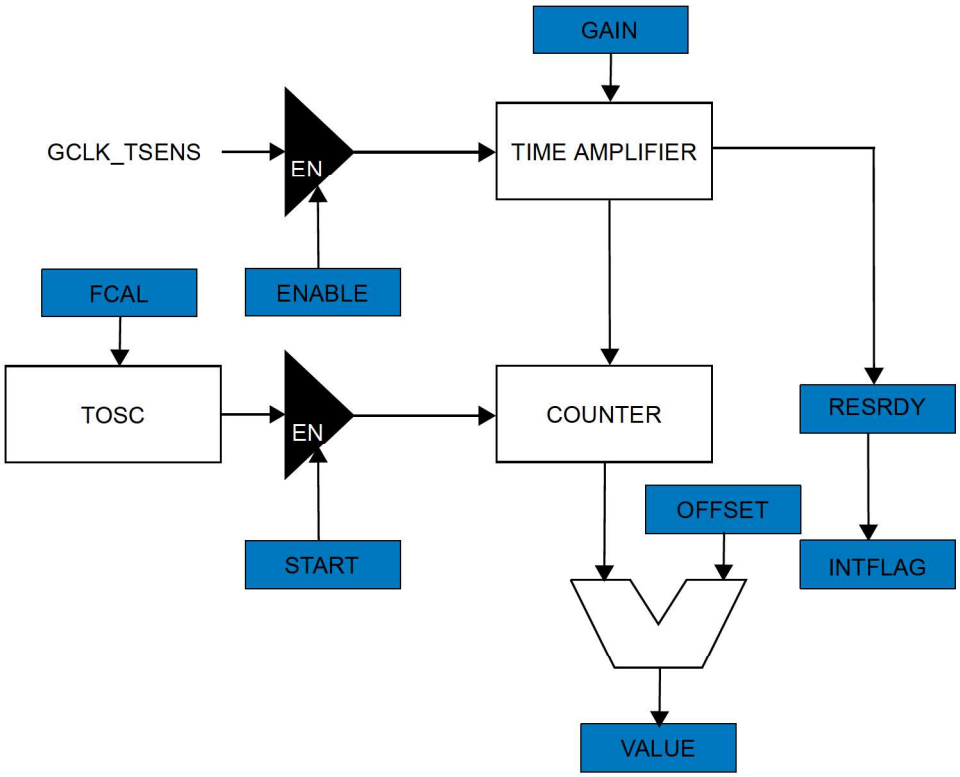

40.4 Peripheral Dependencies

Peripheral	Base Address	IRQ	AHB CLK	APB CLK	Generic CLK	PAC		Events		DMA	Sleep Walking
			Enabled at reset	Enabled at reset	Index	Index	Prot at reset	User	Generator	Index	
TSENS	0x40003000	5	-	N	5	12	N	-	-	-	-

40.5 Functional Description

40.5.1 Principle of Operation

The TSENS measures the operating temperature of the device by comparing the difference in two temperature dependent frequencies to a known frequency. The frequency of the temperature dependent oscillator (TOSC) is measured twice: first with the min configuration and next with the max configuration. The number of periods of GCLK_TSENS used for the measurement is defined by the GAIN register. The width of the resulting pulse is measured using a counter clocked by GCLK_TSENS in the up direction for the 1st phase and in the down 2nd phase.

The resulting signed value is proportional to the temperature and is corrected for offset by the contents of the OFFSET register.

$$\mathrm{VALUE} = \mathrm{OFFSET} + \mathrm{GAIN} \times \left(\frac{f_{\mathrm{TOSCMIN}}}{f_{\mathrm{GCLK}}} + - \frac{f_{\mathrm{TOSCMAX}}}{f_{\mathrm{GCLK}}} \right)$$

Notes:

- The values of GAIN and OFFSET are factory programmed to give a specific temperature slope when using the undivided internal 48 MHz oscillator (OSC48M) as the GCLK_TSENS source. Other frequencies/sources may be used, but the GAIN setting and/or expected slope will need to be scaled accordingly.
- The calibration value should be copied and written into the GAIN and OFFSET registers to get the specified accuracy.

40.5.2 Basic Operation

40.5.2.1 Initialization

The generic clocks (GCLK_TSENS) should be configured and enabled. Refer to the Generic Clock Controller chapter for details.

The following bits are enable-protected, meaning that they can only be written when the TSENS is disabled (40.6.1 CTRLA.ENABLE is zero):

- Run in Standby bit in Control A register (40.6.1 CTRLA.RUNSTDBY)

The following registers are enable-protected:

- Control C (40.6.3 CTRLC)
- Event Control (40.6.4 EVCTRL)
- Window Monitor Lower Threhold (40.6.11 WINLT)
- Window Monitor Upper Threshold (40.6.12 WINUT)
- Gain Correction (40.6.13 GAIN)
- Offset Correction (40.6.14 OFFSET)
- Calibration (40.6.15 CAL)

Enable-protection is denoted by the Enable-Protected property in the register description.

40.5.2.2 Enabling, Disabling and Resetting

The TSENS is enabled by writing a one to the Enable bit in the Control A register (CTRLA.ENABLE). The TSENS is disabled by writing a zero to CTRLA.ENABLE.

The TSENS is reset by writing a one to the Software Reset bit in the Control A register (CTRLA.SWRST). All registers in the TSENS will be reset to their initial state, and the TSENS will be disabled. Refer to 40.6.1 CTRLA for details.

40.5.2.3 Measurement

After the TSENS is enabled, a measurement can be started either manually, by writing a one to the START bit in Control B register (CTRLB.START), or automatically by configuring an event input. A free-running mode can be used to continuously measure the temperature. When the Free running bit in the Control C register (CTRLC.FREERUN) is written to one, there is no need for a trigger to start the measurement. It will start automatically at the end of previous measurement.

The result of the measurement is stored in the Value register (VALUE), overwriting the result from the previous measurement and setting the Result Ready flag in the Interrupt Flag Status and Clear register (INTFLAG.RESRDY). To avoid data loss, the conversion result must be read as soon as it is available. Failing to do so will result in an overrun error condition, indicated by the OVERRUN bit in the Interrupt Flag Status and Clear register (INTFLAG.OVERRUN).

To use an interrupt handler, the corresponding bit in the Interrupt Enable Set register (INTENSET) must be written to one.

To prevent any discrepancies in the temperature measurement, an average on 10 measurements is recommended.

40.5.2.4 Window Monitor

The window monitor feature allows the measurement result in the VALUE register to be compared to predefined threshold values. The window mode is selected by writing the Window Monitor Mode bits in the Control C register (CTRLC.WINMODE). Threshold values must be written in the Window Monitor Lower Threshold register (WINLT) and Window Monitor Upper Threshold register (WINUT).

40.5.3 DMA Operation

The TSENS generates the following DMA request:

- Result Ready (RESRDY): the request is set when a measurement result is available, and cleared when the VALUE register is read. The request is generated independent of any Window Monitor condition.

40.5.4 Interrupts

The TSENS has the following interrupt sources:

- Result Ready (RESRDY): Indicates when a measurement result is available.
- Window Monitor (WINMON): Generated when the measurement result matches the window monitor condition. Refer to 40.6.3 CTRLC for details.
- Overrun (OVERRUN): Indicates that a new result is ready before the previous result has been read.
- Overflow (OVF): Indicates that the result is invalid because the result required more than 16 bits and overflowed the VALUE register.

Each interrupt source has an interrupt flag associated with it. The interrupt flag in the Interrupt Flag Status and Clear (INTFLAG) register is set when the interrupt condition occurs. Each interrupt can be individually enabled by writing a one to the corresponding bit in the Interrupt Enable Set (INTENSET) register, and disabled by writing a one to the corresponding bit in the Interrupt Enable Clear (INTENCLR) register. An interrupt request is generated when the interrupt flag is set and the corresponding interrupt is enabled. The interrupt request remains active until the interrupt flag is cleared, the interrupt is disabled, or the TSENS is reset. See 40.6.7 INTFLAG for details on how to clear interrupt flags. All interrupt requests from the peripheral are ORed together on system level to generate one combined interrupt request to the NVIC. The user must read the INTFLAG register to determine which interrupt condition is present.

Note that interrupts must be globally enabled for interrupt requests to be generated.

40.5.5 Events

The TSENS can generate the following output event:

- Window Monitor (WINMON): Generated when the measurement results matches the window monitor condition. Refer to 40.6.3 CTRLC for details.

Writing a one to an Event Output bit in the Event Control Register (EVCTRL.WINEO) enables the corresponding output event. Writing a zero to this bit disables the corresponding output event. Refer to the Event System chapter for details on configuring the event system.

The TSENS can take the following action on an input event:

- Start measurement (START): Start a measurement. Refer to 40.6.2 CTRLB for details.

Writing a one to an Event Input bit into the Event Control register (EVCTRL.STARTEI) enables the corresponding action on input event. Writing a zero to this bit disables the corresponding action on input event. Refer to the Event System chapter for details. By default, the TSENS will detect a rising edge on the incoming event. If the TSENS

action must be performed on the falling edge of the incoming event, the event line must be inverted first, by writing to one the corresponding Event Invert Enable bit in Event Control register (EVCTRL.STARTINV).

40.5.6 Sleep Mode Operation

The Run in Standby bit in the Control A register (40.6.1 CTRLA.RUNSTDBY) controls the behavior of the TSENS during standby sleep mode, in cases where the TSENS is enabled (CTRLA.ENABLE = 1).

Table 40-1. TSENS Sleep Behavior

CTRLA.RUNSTDBY	CTRLC.FREERUN	CTRLA.ENABLE	Description
x	x	0	Disabled
0	0	1	Run in all sleep modes on request, except Standby mode.
0	1	1	Run in all sleep modes, except Standby mode.
1	0	1	Run in all sleep modes on request.
1	1	1	Run in all sleep modes.

40.5.7 Synchronization

Due to the asynchronicity between the main clock domain (CLK_TSENS_APB) and the peripheral clock domain (GCLK_TSENS) some registers are synchronized when written. When a write-synchronized register is written, the corresponding bit in the Synchronization Busy register (SYNCBUSY) is set immediately. When the write-synchronization is complete, this bit is cleared. Reading a write-synchronized register while the synchronization is ongoing will return the value written, and not the current value in the peripheral clock domain. To read the current value in the peripheral clock domain after writing a register, the user must wait for the corresponding SYNCBUSY bit to be cleared before reading the value.

If an operation that require synchronization is executed while its busy bit is on, the operation is discarded and a bus error is generated.

The following bits need synchronization when written:

- Software Reset bit in Control A register (40.6.1 CTRLA.SWRST)
- Enable bit in Control A register (40.6.1 CTRLA.ENABLE)

Write-synchronization is denoted by the Write-Synchronized property in the register description.

40.6 Register Summary

Offset	Name	Bit Pos.	7	6	5	4	3	2	1	0
0x00	CTRLA	7:0		RUNSTDBY					ENABLE	SWRST
0x01	CTRLB	7:0								START
0x02	CTRLC	7:0				FREERUN		WINMODE[2:0]		
0x03	EVCTRL	7:0						WINEO	STARTINV	STARTEI
0x04	INTENCLR	7:0					OVF	WINMON	OVERRUN	RESRDY
0x05	INTENSET	7:0					OVF	WINMON	OVERRUN	RESRDY
0x06	INTFLAG	7:0					OVF	WINMON	OVERRUN	RESRDY
0x07	STATUS	7:0								OVF
0x08	SYNCBUSY	7:0							ENABLE	SWRST
		15:8								
		23:16								
		31:24								
0x0C	VALUE	7:0	VALUE[7:0]							
		15:8	VALUE[15:8]							
		23:16	VALUE[23:16]							
		31:24								
0x10	WINLT	7:0	WINLT[7:0]							
		15:8	WINLT[15:8]							
		23:16	WINLT[23:16]							
		31:24								
0x14	WINUT	7:0	WINUT[7:0]							
		15:8	WINUT[15:8]							
		23:16	WINUT[23:16]							
		31:24								
0x18	GAIN	7:0	GAIN[7:0]							
		15:8	GAIN[15:8]							
		23:16	GAIN[23:16]							
		31:24								
0x1C	OFFSET	7:0	OFFSETC[7:0]							
		15:8	OFFSETC[15:8]							
		23:16	OFFSETC[23:16]							
		31:24								
0x20	CAL	7:0			FCAL[5:0]					
		15:8			TCAL[5:0]					
		23:16								
		31:24								
0x24	DBGCTRL	7:0								DBGRUN

40.6.1 Control A

Name: CTRLA
Offset: 0x00
Reset: 0x00
Property: PAC Write-Protection, Write-Synchronized (ENABLE, SWRST)

Bit	7	6	5	4	3	2	1	0
		RUNSTDBY					ENABLE	SWRST
Access		R/W					R/W	R/W
Reset		0					0	0

Bit 6 – RUNSTDBY Run in Standby
This bit controls how the TSENS behaves during Standby Sleep mode:
This bit is not synchronized.

Value	Description
0	The TSENS is halted during Standby Sleep mode.
1	The TSENS is not stopped in Standby Sleep mode. If CTRLC.FREERUN is zero, the TSENS will be running when a peripheral is requesting it. If CTRLC.FREERUN is one, the TSENS will always be running in Standby Sleep mode.

Bit 1 – ENABLE Enable
Due to synchronization there is delay from writing CTRLA.ENABLE until the peripheral is enabled/disabled. The value written to CTRLA.ENABLE will read back immediately and the ENABLE bit in the Synchronization Busy register (SYNCBUSY.ENABLE) will be set. SYNCBUSY.ENABLE will be cleared when the operation is complete.
This bit is not enable-protected.

Value	Description
0	The peripheral is disabled.
1	The peripheral is enabled.

Bit 0 – SWRST Software Reset
Writing a zero to this bit has no effect.
Writing a one to this bit resets all registers in the TSENS, except GAIN, OFFSET, CAL and DBGCTRL, to their initial state, and the TSENS will be disabled.
Writing a one to CTRLA.SWRST will always take precedence, meaning that all other writes in the same write-operation will be discarded.
Due to synchronization there is a delay from writing CTRLA.SWRST until the reset is complete. CTRLA.SWRST and SYNCBUSY.SWRST will both be cleared when the reset is complete.
This bit is not enable-protected.

Value	Description
0	There is no reset operation ongoing.
1	The reset operation is ongoing.

40.6.2 Control B

Name: CTRLB
Offset: 0x01
Reset: 0x00
Property: PAC Write-Protection

Note: PAC write protection will prevent the CTRLB register from write access, but will not trigger a PAC interrupt.

Bit	7	6	5	4	3	2	1	0
								START
Access								W
Reset								0

Bit 0 – START Start Measurement

Value	Description
0	Writing a zero to this bit has no effect.
1	Writing a one to this bit starts a measurement

40.6.3 Control C

Name: CTRLC
Offset: 0x02
Reset: 0x00
Property: PAC Write-Protection, Enable-protected

Bit	7	6	5	4	3	2	1	0
				FREERUN		WINMODE[2:0]		
Access				R/W		R/W	R/W	R/W
Reset				0		0	0	0

Bit 4 – FREERUN Free Running Measurement

Value	Description
0	TSENS operates in single measurement mode.
1	TSENS is in free running mode and a new measurement will be initiated when the previous measurement completes.

Bits 2:0 – WINMODE[2:0] Window Monitor Mode
These bits enable and define the window monitor mode.

Value	Name	Description
0x0	DISABLE	No window mode (default)
0x1	ABOVE	VALUE > WINLT
0x2	BELOW	VALUE < WINUT
0x3	INSIDE	WINLT < VALUE < WINUT
0x4	OUTSIDE	WINUT < VALUE < WINLT
0x5	HYST_ABOVE	VALUE > WINUT with hysteresis to WINLT
0x6	HYST_BELOW	VALUE < WINLT with hysteresis to WINUT
0x07		Reserved

40.6.4 Event Control

Name: EVCTRL
Offset: 0x03
Reset: 0x00
Property: PAC Write-Protection, Enable-protected

Bit	7	6	5	4	3	2	1	0
						WINEO	STARTINV	STARTEI
Access						R/W	R/W	R/W
Reset						0	0	0

Bit 2 – WINEO Window Monitor Event Out
This bit indicates whether the Window Monitor event output is enabled or not and an output event will be generated when the window monitor detects something.

Value	Description
0	Window Monitor event output is disabled and an event will not be generated.
1	Window Monitor event output is enabled and an event will be generated.

Bit 1 – STARTINV Start Conversion Event Invert Enable

Value	Description
0	start event input source is not inverted.
1	start event input source is inverted.

Bit 0 – STARTEI Start Conversion Event Input Enable

Value	Description
0	A new conversion will not be triggered on any incoming event.
1	A new conversion will be triggered on any incoming event.

40.6.5 Interrupt Enable Clear

Name: INTENCLR
Offset: 0x04
Reset: 0x00
Property: PAC Write-Protection

This register allows the user to disable an interrupt without doing a read-modify-write operation. Changes in this register will also be reflected in the Interrupt Enable Set (INTENSET) register.

Bit	7	6	5	4	3	2	1	0
					OVF	WINMON	OVERRUN	RESRDY
Access					R/W	R/W	R/W	R/W
Reset					0	0	0	0

Bit 3 – OVF Overflow Interrupt Enable
Writing a zero to this bit has no effect.
Writing a one to this bit will clear the Overflow Interrupt Enable bit, which disables the corresponding interrupt request.

Value	Description
0	The overflow interrupt is disabled.
1	The overflow interrupt is enabled, and an interrupt request will be generated when the Overflow interrupt flag is set.

Bit 2 – WINMON Window Monitor Interrupt Enable
Writing a zero to this bit has no effect.
Writing a one to this bit will clear the Window Monitor Interrupt Enable bit, which disables the corresponding interrupt request.

Value	Description
0	The window monitor interrupt is disabled.
1	The window monitor interrupt is enabled, and an interrupt request will be generated when the Window Monitor interrupt flag is set.

Bit 1 – OVERRUN Overrun Interrupt Enable
Writing a zero to this bit has no effect.
Writing a one to this bit will clear the Overrun Interrupt Enable bit, which disables the corresponding interrupt request.

Value	Description
0	The Overrun interrupt is disabled.
1	The Overrun interrupt is enabled, and an interrupt request will be generated when the Overrun interrupt flag is set.

Bit 0 – RESRDY Result Ready Interrupt Enable
Writing a zero to this bit has no effect.
Writing a one to this bit will clear the Result Ready Interrupt Enable bit, which disables the corresponding interrupt request.

Value	Description
0	The Result Ready interrupt is disabled.
1	The Result Ready interrupt is enabled, and an interrupt request will be generated when the Result Ready interrupt flag is set.

40.6.6 Interrupt Enable Set

Name: INTENSET
Offset: 0x05
Reset: 0x00
Property: PAC Write-Protection

This register allows the user to enable an interrupt without doing a read-modify-write operation. Changes in this register will also be reflected in the Interrupt Enable Clear (INTENCLR) register.

Bit	7	6	5	4	3	2	1	0
					OVF	WINMON	OVERRUN	RESRDY
Access					R/W	R/W	R/W	R/W
Reset					0	0	0	0

Bit 3 – OVF Overflow Interrupt Enable
Writing a zero to this bit has no effect.
Writing a one to this bit will set the Overflow Interrupt bit, which enables the Overflow interrupt.

Value	Description
0	The Overflow interrupt is disabled.
1	The Overflow interrupt is enabled.

Bit 2 – WINMON Window Monitor Interrupt Enable
Writing a zero to this bit has no effect.
Writing a one to this bit will set the Window Monitor Interrupt bit, which enables the Window Monitor interrupt.

Value	Description
0	The Window Monitor interrupt is disabled.
1	The Window Monitor interrupt is enabled.

Bit 1 – OVERRUN Overrun Interrupt Enable
Writing a zero to this bit has no effect.
Writing a one to this bit will set the Overrun Interrupt Enable bit, which enables the corresponding interrupt request.

Value	Description
0	The Overrun interrupt is disabled.
1	The Overrun interrupt is enabled.

Bit 0 – RESRDY Result Ready Interrupt Enable
Writing a zero to this bit has no effect.
Writing a one to this bit will set the Result Ready Interrupt bit, which enables the Result Ready interrupt.

Value	Description
0	The Result Ready interrupt is disabled.
1	The Result Ready interrupt is enabled.

40.6.7 Interrupt Flag Status and Clear

Name: INTFLAG
Offset: 0x06
Reset: 0x00
Property: –

Bit	7	6	5	4	3	2	1	0
					OVF	WINMON	OVERRUN	RESRDY
Access					R/W	R/W	R/W	R/W
Reset					0	0	0	0

Bit 3 – OVF Overflow
This flag is cleared by writing a one to the flag.
This flag is set when the conversion result requires more than 24 bits and overflows the VALUE register, and an interrupt request will be generated if INTENCLR/SET.OVF is one.
Writing a zero to this bit has no effect.
Writing a one to this bit clears the Overflow interrupt flag.

Bit 2 – WINMON Window Monitor
This flag is cleared by writing a one to the flag or by reading the VALUE register.
This flag is set on the next cycle after a match with the window monitor condition, and an interrupt request will be generated if INTENCLR/SET.WINMON is one.
Writing a zero to this bit has no effect.
Writing a one to this bit clears the Window Monitor interrupt flag.

Bit 1 – OVERRUN Overrun
This flag is cleared by writing a one to the flag.
This flag is set if a valid VALUE is updated before the previous valid value has been read by the CPU, and an interrupt will be generated if INTENCLR/SET.OVERRUN is one.
Writing a zero to this bit has no effect.
Writing a one to this bit clears the Overrun interrupt flag.

Bit 0 – RESRDY Result Ready
This flag is cleared by writing a one to the flag or by reading the VALUE register.
This flag is set when the conversion result is available, and an interrupt will be generated if INTENCLR/SET.RESRDY is one.
This flag will not set if an overflow occurs during the conversion.
Writing a zero to this bit has no effect.
Writing a one to this bit clears the Result Ready interrupt flag.

40.6.8 Status

Name: STATUS
Offset: 0x07
Reset: 0x00
Property: –

Bit	7	6	5	4	3	2	1	0
								OVF
Access								R
Reset								0

Bit 0 – OVF Result Overflow
Writing a zero to this bit has no effect.
Writing a one to this bit has no effect.

Value	Description
0	No overflow in the VALUE register has occurred. The result is valid.
1	An overflow occurred in the VALUE register. The result is not valid.

40.6.9 Synchronization Busy

Name: SYNCBUSY
Offset: 0x08
Reset: 0x00000000
Property: –

Bit	31	30	29	28	27	26	25	24
Access								
Reset								

Bit	23	22	21	20	19	18	17	16
Access								
Reset								

Bit	15	14	13	12	11	10	9	8
Access								
Reset								

Bit	7	6	5	4	3	2	1	0
							ENABLE	SWRST
Access							R	R
Reset							0	0

Bit 1 – ENABLE Enable Busy
This bit is cleared when the synchronization of CTRLA.ENABLE is complete.
This bit is set when the synchronization of CTRLA.ENABLE is started.

Bit 0 – SWRST Software Reset Busy
This bit is cleared when the synchronization of CTRLA.SWRST is complete.
This bit is set when the synchronization of CTRLA.SWRST is started.

40.6.10 Value

Name: VALUE
Offset: 0x0C
Reset: 0x0000
Property: –

Bit	31	30	29	28	27	26	25	24
Access								
Reset								

Bit	23	22	21	20	19	18	17	16
	VALUE[23:16]							
Access	R	R	R	R	R	R	R	R
Reset	0	0	0	0	0	0	0	0

Bit	15	14	13	12	11	10	9	8
	VALUE[15:8]							
Access	R	R	R	R	R	R	R	R
Reset	0	0	0	0	0	0	0	0

Bit	7	6	5	4	3	2	1	0
	VALUE[7:0]							
Access	R	R	R	R	R	R	R	R
Reset	0	0	0	0	0	0	0	0

Bits 23:0 – VALUE[23:0] Measurement Value
Result from measurement. This VALUE is in two's complement format.
Example: If the TSENS GAIN and OFFSET registers are setup with values stored in the 8.5 NVM Temperature Calibration Area Mapping, the TSENS resolution is set at 100 which will result in the following values

Temperature	VALUE
T = 25°C	2500 = 0x09C4
T = -25°C	-2500 = 0xFFF63C

40.6.11 Window Monitor Lower Threshold

Name: WINLT
Offset: 0x10
Reset: 0x0000
Property: PAC Write-Protection, Enable-Protected

Bit	31	30	29	28	27	26	25	24
Access								
Reset								

Bit	23	22	21	20	19	18	17	16
	WINLT[23:16]							
Access	R/W	R/W	R/W	R/W	R/W	R/W	R/W	R/W
Reset	0	0	0	0	0	0	0	0

Bit	15	14	13	12	11	10	9	8
	WINLT[15:8]							
Access	R/W	R/W	R/W	R/W	R/W	R/W	R/W	R/W
Reset	0	0	0	0	0	0	0	0

Bit	7	6	5	4	3	2	1	0
	WINLT[7:0]							
Access	R/W	R/W	R/W	R/W	R/W	R/W	R/W	R/W
Reset	0	0	0	0	0	0	0	0

Bits 23:0 – WINLT[23:0] Window Lower Threshold
If the window monitor is enabled, these bits define the lower threshold value. This WINLT value is in two's complement format.

40.6.12 Window Monitor Upper Threshold

Name: WINUT
Offset: 0x14
Reset: 0x0000
Property: PAC Write-Protection, Enable-Protected

Bit	31	30	29	28	27	26	25	24
Access								
Reset								

Bit	23	22	21	20	19	18	17	16
	WINUT[23:16]							
Access	R/W	R/W	R/W	R/W	R/W	R/W	R/W	R/W
Reset	0	0	0	0	0	0	0	0

Bit	15	14	13	12	11	10	9	8
	WINUT[15:8]							
Access	R/W	R/W	R/W	R/W	R/W	R/W	R/W	R/W
Reset	0	0	0	0	0	0	0	0

Bit	7	6	5	4	3	2	1	0
	WINUT[7:0]							
Access	R/W	R/W	R/W	R/W	R/W	R/W	R/W	R/W
Reset	0	0	0	0	0	0	0	0

Bits 23:0 – WINUT[23:0] Window Upper Threshold
If the window monitor is enabled, these bits define the upper threshold value. This WINUT value is in two's complement format.

40.6.13 Gain

Name: GAIN
Offset: 0x18
Reset: 0x0000
Property: Enable-Protected, PAC Write-Protection, not reset by a software reset

Bit	31	30	29	28	27	26	25	24
Access								
Reset								

Bit	23	22	21	20	19	18	17	16
	GAIN[23:16]							
Access	R/W	R/W	R/W	R/W	R/W	R/W	R/W	R/W
Reset	0	0	0	0	0	0	0	0

Bit	15	14	13	12	11	10	9	8
	GAIN[15:8]							
Access	R/W	R/W	R/W	R/W	R/W	R/W	R/W	R/W
Reset	0	0	0	0	0	0	0	0

Bit	7	6	5	4	3	2	1	0
	GAIN[7:0]							
Access	R/W	R/W	R/W	R/W	R/W	R/W	R/W	R/W
Reset	0	0	0	0	0	0	0	0

Bits 23:0 – GAIN[23:0] Time Amplifier Gain
This value from production test must be loaded from the NVM temperature calibration row into the register by software to achieve the specified accuracy.
The bitfield can also be written by CPU.
The GAIN value defines the number of GCLK_TSENS periods that will be used for a measurement cycle.

40.6.14 Offset

Name: OFFSET
Offset: 0x1C
Reset: 0x0000
Property: Enable-Protected, PAC Write-Protection, not reset by a software reset

Bit	31	30	29	28	27	26	25	24
Access								
Reset								

Bit	23	22	21	20	19	18	17	16
	OFFSETC[23:16]							
Access	R/W	R/W	R/W	R/W	R/W	R/W	R/W	R/W
Reset	0	0	0	0	0	0	0	0

Bit	15	14	13	12	11	10	9	8
	OFFSETC[15:8]							
Access	R/W	R/W	R/W	R/W	R/W	R/W	R/W	R/W
Reset	0	0	0	0	0	0	0	0

Bit	7	6	5	4	3	2	1	0
	OFFSETC[7:0]							
Access	R/W	R/W	R/W	R/W	R/W	R/W	R/W	R/W
Reset	0	0	0	0	0	0	0	0

Bits 23:0 – OFFSETC[23:0] Offset Correction
This value from production test must be loaded from the NVM temperature calibration row into the register by software to achieve the specified accuracy.
The bitfield can also be written by CPU.
These bits define how the TSENS measurement result is compensated for offset error before being written to the VALUE register. This OFFSET value is in two's complement format.

40.6.15 Calibration

Name: CAL
Offset: 0x20
Reset: 0x00000000
Property: Enable-Protected, PAC Write-Protection, not reset by a software reset

Bit	31	30	29	28	27	26	25	24
Access								
Reset								

Bit	23	22	21	20	19	18	17	16
Access								
Reset								

Bit	15	14	13	12	11	10	9	8
			TCAL[5:0]					
Access			R/W	R/W	R/W	R/W	R/W	R/W
Reset			0	0	0	0	0	0

Bit	7	6	5	4	3	2	1	0
			FCAL[5:0]					
Access			R/W	R/W	R/W	R/W	R/W	R/W
Reset			0	0	0	0	0	0

Bits 13:8 – TCAL[5:0] Temperature Calibration
This value from production test must be loaded from the NVM software calibration row into the CAL register by software to achieve the specified accuracy. The value must be copied only, and must not be changed.

Bits 5:0 – FCAL[5:0] Frequency Calibration
This value from production test must be loaded from the NVM software calibration row into the CAL register by software to achieve the specified accuracy. The value must be copied only, and must not be changed.

40.6.16 Debug Control

Name: DBGCTRL
Offset: 0x24
Reset: 0x00
Property: –

Bit	7	6	5	4	3	2	1	0
								DBGRUN
Access								R/W
Reset								0

Bit 0 – DBGRUN Debug Run
This bit is reset by a system software reset.
This bits controls the functionality when the CPU is halted by an external debugger.

Value	Description
0	The TSENS is halted when the CPU is halted by an external debugger. Any on-going measurement will complete.
1	The TSENS continues normal operation when the CPU is halted by an external debugger.

41. Frequency Meter (FREQM)

41.1 Overview

The Frequency Meter (FREQM) can be used to accurately measure the frequency of a clock by comparing it to a known reference clock.

41.2 Features

- Ratio can be measured with 24-bit accuracy
- Accurately measures the frequency of an input clock with respect to a reference clock
- Reference clock can be selected from the available GCLK_FREQM_REF sources
- Measured clock can be selected from the available GCLK_FREQM_MSR sources

41.3 Block Diagram

Figure 41-1. FREQM Block Diagram

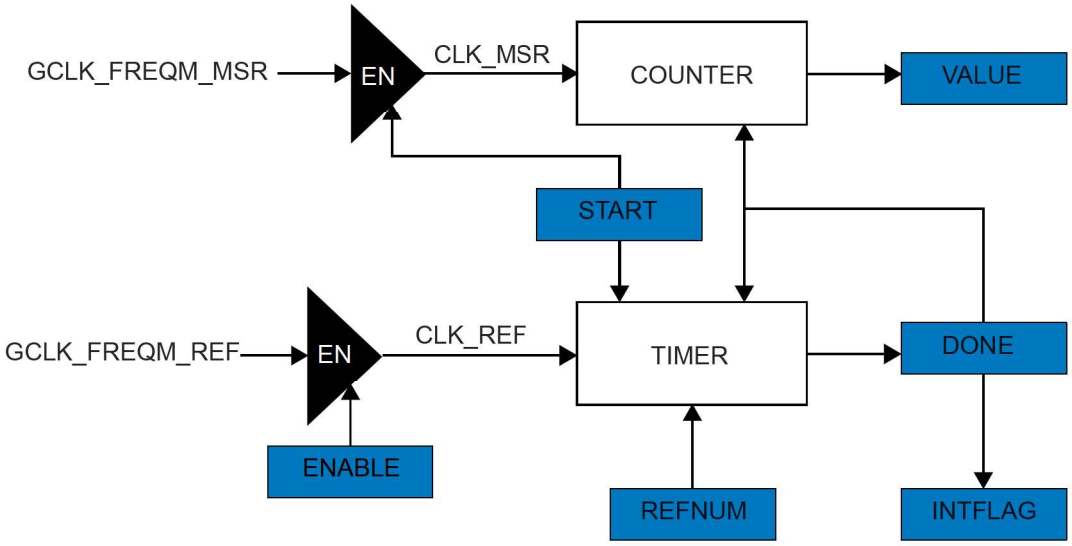

41.4 Peripheral Dependencies

Peripheral	Base Address	IRQ	AHB CLK	APB CLK	Generic CLK	PAC		Events		DMA	Sleep Walking
			Enabled at reset	Enabled at reset	Index	Index	Prot at reset	User	Generator	Index	
FREQM	0x40002C00	4	-	Y	3: Measure 4: Reference	11	N	-	-	-	-

41.5 Functional Description

41.5.1 Principle of Operation

FREQM counts the number of periods of the measured clock (GCLK_FREQM_MSR) with respect to the reference clock (GCLK_FREQM_REF). The measurement is done for a period of REFNUM/f_{CLK_REF} and stored in the Value

register (VALUE.VALUE). REFNUM is the number of Reference clock cycles selected in the Configuration A register (CFGA.REFNUM).

The frequency of the measured clock, f_{CLK_MSR}, is calculated by

$$f_{CLK_MSR} = \left(\frac{VALUE}{REFNUM}\right) f_{CLK_REF}$$

41.5.2 Basic Operation

41.5.2.1 Initialization

Before enabling FREQM, the device and peripheral must be configured:

- Each of the generic clocks (GCLK_FREQM_REF and GCLK_FREQM_MSR) must be configured and enabled. Find CLK_FREQM_REF and GCLK_FREQM_MSR values listed in Table 12-9. PCHCTRLm Mapping.



Important: The reference clock must be slower than the measurement clock.

- Write the number of Reference clock cycles for which the measurement is to be done in the Configuration A register (CFGA.REFNUM). This must be a non-zero number.

The following register is enable-protected, that is it can only be written when the FREQM is disabled: (CTRLA.ENABLE=0):The Configuration A register (CFGA)

Enable-protection is denoted by the "Enable-Protected" property in the register description.

41.5.2.2 Enabling, Disabling and Resetting

The FREQM is enabled by writing a '1' to the Enable bit in the Control A register (CTRLA.ENABLE). The peripheral is disabled by writing CTRLA.ENABLE=0.

The FREQM is reset by writing a '1' to the Software Reset bit in the Control A register (CTRLA.SWRST). On software reset, all registers in the FREQM will be reset to their initial state, and the FREQM will be disabled.

Then ENABLE and SWRST bits are write-synchronized.

For more information, refer to FREQM - Synchronization.

41.5.2.3 Measurement

In the Configuration A register, the Number of Reference Clock Cycles field (CFGA.REFNUM) selects the duration of the measurement. The measurement is given in number of GCLK_FREQM_REF periods.
Note: The REFNUM field must be written before the FREQM is enabled.

After the FREQM is enabled, writing a '1' to the START bit in the Control B register (CTRLB.START) starts the measurement. The BUSY bit in Status register (STATUS.BUSY) is set when the measurement starts, and cleared when the measurement is complete.

There is also an interrupt request for Measurement Done: When the Measurement Done bit in Interrupt Enable Set register (INTENSET.DONE) is '1' and a measurement is finished, the Measurement Done bit in the Interrupt Flag Status and Clear register (INTFLAG.DONE) will be set and an interrupt request is generated.

The result of the measurement can be read from the Value register (VALUE.VALUE). The frequency of the measured clock GCLK_FREQM_MSR is then:

$$f_{CLK_MSR} = \left(\frac{VALUE}{REFNUM}\right) f_{CLK_REF}$$

Note: In order to make sure the measurement result (VALUE.VALUE[23:0]) is valid, the overflow status (STATUS.OVF) should be checked.

In case an overflow condition occurred, indicated by the Overflow bit in the STATUS register (STATUS.OVF), either the number of reference clock cycles must be reduced (CFGA.REFNUM), or a faster reference clock must be configured. Once the configuration is adjusted, clear the overflow status by writing a '1' to STATUS.OVF. Then another measurement can be started by writing a '1' to CTRLB.START.

41.5.3 Interrupts

The FREQM has one interrupt source:

- DONE: A frequency measurement is done.

The interrupt flag in the Interrupt Flag Status and Clear (41.6.6 INTFLAG) register is set when the interrupt condition occurs. The interrupt can be enabled by writing a '1' to the corresponding bit in the Interrupt Enable Set (41.6.5 INTENSET) register, and disabled by writing a '1' to the corresponding bit in the Interrupt Enable Clear (41.6.4 INTENCLR) register.

An interrupt request is generated when the interrupt flag is set and the corresponding interrupt is enabled. The interrupt request remains active until the interrupt flag is cleared, the interrupt is disabled, or the FREQM is reset. See 41.6.6 INTFLAG for details on how to clear interrupt flags.

This interrupt is a synchronous wake-up source.

Note that interrupts must be globally enabled for interrupt requests to be generated.

41.5.4 Sleep Mode Operation

The FREQM will continue to operate in Idle Sleep mode where the selected source clock is running. The FREQM's interrupts can be used to wake up the device from Idle Sleep mode.

For lowest chip power consumption in sleep modes, FREQM should be disabled before entering a Sleep mode.

For more information, refer to the 16. Power Manager (PM).

41.5.5 Synchronization

Due to asynchronicity between the main clock domain and the peripheral clock domains, some registers need to be synchronized when written or read.

The following bits and registers are write-synchronized:

- Software Reset bit in Control A register (CTRLA.SWRST)
- Enable bit in Control A register (CTRLA.ENABLE)

Required write-synchronization is denoted by the "Write-Synchronized" property in the register description

For more information, refer to 11.3 Register Synchronization.

41.6 Register Summary

Offset	Name	Bit Pos.	7	6	5	4	3	2	1	0
0x00	CTRLA	7:0							ENABLE	SWRST
0x01	CTRLB	7:0								START
0x02	CFGA	7:0	REFNUM[7:0]							
		15:8								
0x04 ... 0x07	Reserved									
0x08	INTENCLR	7:0								DONE
0x09	INTENSET	7:0								DONE
0x0A	INTFLAG	7:0								DONE
0x0B	STATUS	7:0							OVF	BUSY
0x0C	SYNCBUSY	7:0							ENABLE	SWRST
		15:8								
		23:16								
		31:24								
0x10	VALUE	7:0	VALUE[7:0]							
		15:8	VALUE[15:8]							
		23:16	VALUE[23:16]							
		31:24								

41.6.1 Control A

Name: CTRLA
Offset: 0x00
Reset: 0x00
Property: PAC Write-Protection, Write-Synchronized Bits

Bit	7	6	5	4	3	2	1	0
							ENABLE	SWRST
Access							R/W	R/W
Reset							0	0

Bit 1 – ENABLE Enable
Note: This bit is write-synchronized: SYNCBUSY.ENABLE must be checked to ensure the CTRLA.ENABLE synchronization is complete.

Value	Description
0	The peripheral is disabled.
1	The peripheral is enabled.

Bit 0 – SWRST Software Reset
Writing a '0' to this bit has no effect.
Writing a '1' to this bit resets all registers in the FREQM to their initial state, and the FREQM will be disabled. Writing a '1' to this bit will always take precedence, meaning that all other writes in the same write-operation will be discarded.
Note: This bit is write-synchronized: SYNCBUSY.SWRST must be checked to ensure the CTRLA.SWRST synchronization is complete.

Value	Description
0	There is no ongoing Reset operation.
1	The Reset operation is ongoing.

41.6.2 Control B

Name: CTRLB
Offset: 0x01
Reset: 0x00
Property: –

Bit	7	6	5	4	3	2	1	0
								START
Access								W
Reset								0

Bit 0 – START Start Measurement
Note: Reading the START bit will result in a PAC error when PAC protection is enabled for the FREQM.

Value	Description
0	Writing a '0' has no effect.
1	Writing a '1' starts a measurement.

41.6.3 Configuration A

Name: CFGA
Offset: 0x02
Reset: 0x0000
Property: PAC Write-Protection, Enable-protected

Bit	15	14	13	12	11	10	9	8
Access								
Reset								

Bit	7	6	5	4	3	2	1	0
	REFNUM[7:0]							
Access	R/W	R/W	R/W	R/W	R/W	R/W	R/W	R/W
Reset	0	0	0	0	0	0	0	0

Bits 7:0 – REFNUM[7:0] Number of Reference Clock Cycles
Selects the duration of a measurement in number of CLK_FREQM_REF cycles. This must be a non-zero value, i.e. 0x01 (one cycle) to 0xFF (255 cycles).

41.6.4 Interrupt Enable Clear

Name: INTENCLR
Offset: 0x08
Reset: 0x00
Property: PAC Write-Protection

Bit	7	6	5	4	3	2	1	0
								DONE
Access								R/W
Reset								0

Bit 0 – DONE Measurement Done Interrupt Enable
Writing a '0' to this bit has no effect.
Writing a '1' to this bit will clear the Measurement Done Interrupt Enable bit, which disables the Measurement Done interrupt.

Value	Description
0	The Measurement Done interrupt is disabled.
1	The Measurement Done interrupt is enabled.

41.6.5 Interrupt Enable Set

Name: INTENSET
Offset: 0x09
Reset: 0x00
Property: PAC Write-Protection

Bit	7	6	5	4	3	2	1	0
								DONE
Access								R/W
Reset								0

Bit 0 – DONE Measurement Done Interrupt Enable
Writing a '0' to this bit has no effect.
Writing a '1' to this bit will set the Measurement Done Interrupt Enable bit, which enables the Measurement Done interrupt.

Value	Description
0	The Measurement Done interrupt is disabled.
1	The Measurement Done interrupt is enabled.

41.6.6 Interrupt Flag Status and Clear

Name: INTFLAG
Offset: 0x0A
Reset: 0x00
Property: –

Bit	7	6	5	4	3	2	1	0
								DONE
Access								R/W
Reset								0

Bit 0 – DONE Mesurement Done
This flag is cleared by writing a '1' to it.
This flag is set when the STATUS.BUSY bit has a one-to-zero transition.
Writing a '0' to this bit has no effect.
Writing a '1' to this bit will clear the DONE interrupt flag.

41.6.7 Status

Name: STATUS
Offset: 0x0B
Reset: 0x00
Property: –

Bit	7	6	5	4	3	2	1	0
							OVF	BUSY
Access							R/W	R
Reset							0	0

Bit 1 – OVF Sticky Count Value Overflow
This bit is cleared by writing a '1' to it.
This bit is set when an overflow condition occurs to the value counter.
Writing a '0' to this bit has no effect.
Writing a '1' to this bit will clear the OVF status.

Bit 0 – BUSY FREQM Status

Value	Description
0	No ongoing frequency measurement.
1	Frequency measurement is ongoing.

41.6.8 Synchronization Busy

Name: SYNCBUSY
Offset: 0x0C
Reset: 0x00000000
Property: –

Bit	31	30	29	28	27	26	25	24
Access								
Reset								

Bit	23	22	21	20	19	18	17	16
Access								
Reset								

Bit	15	14	13	12	11	10	9	8
Access								
Reset								

Bit	7	6	5	4	3	2	1	0
							ENABLE	SWRST
Access							R	R
Reset							0	0

Bit 1 – ENABLE Enable
This bit is cleared when the synchronization of CTRLA.ENABLE is complete.
This bit is set when the synchronization of CTRLA.ENABLE is started.

Bit 0 – SWRST Synchronization Busy
This bit is cleared when the synchronization of CTRLA.SWRST is complete.
This bit is set when the synchronization of CTRLA.SWRST is started.

41.6.9 Value

Name: VALUE
Offset: 0x10
Reset: 0x00000000
Property: –

Bit	31	30	29	28	27	26	25	24
Access								
Reset								

Bit	23	22	21	20	19	18	17	16
	VALUE[23:16]							
Access	R	R	R	R	R	R	R	R
Reset	0	0	0	0	0	0	0	0

Bit	15	14	13	12	11	10	9	8
	VALUE[15:8]							
Access	R	R	R	R	R	R	R	R
Reset	0	0	0	0	0	0	0	0

Bit	7	6	5	4	3	2	1	0
	VALUE[7:0]							
Access	R	R	R	R	R	R	R	R
Reset	0	0	0	0	0	0	0	0

Bits 23:0 – VALUE[23:0] Measurement Value
Result from measurement.

42. Position Decoder (PDEC)

42.1 Overview

The PDEC consists of a Quadrature / Hall decoder, followed by a counter, with two compare channels. The counter can be split into two parts to report the angular position and the number of revolutions. If the quadrature decoder feature is not suitable for specific applications, the PDEC module can be used as an additional time base.

42.2 Features

- Internal prescaler
- Selectable mode of operation:
  - QDEC, HALL or COUNTER
- QDEC
  - Angular and revolution counts
  - Synchronous and asynchronous velocity measurements
  - Direction change detection
  - Check valid quadrature transitions
  - Check index position versus angular position
  - Auto correction mode
- HALL
  - Window validation of Hall transitions
  - Hall code detection
  - Direction change detection
  - Check valid Hall transitions
  - Programmable event generation delay after a Hall transition
- COUNTER
  - 16-bit counter with two compare channels
  - One of the compare channels can be configured with period settings
  - Counter overflow interrupt and event generation option
  - Compare match interrupt and event generation option

42.3 Block Diagram

Figure 42-1. Block Diagram

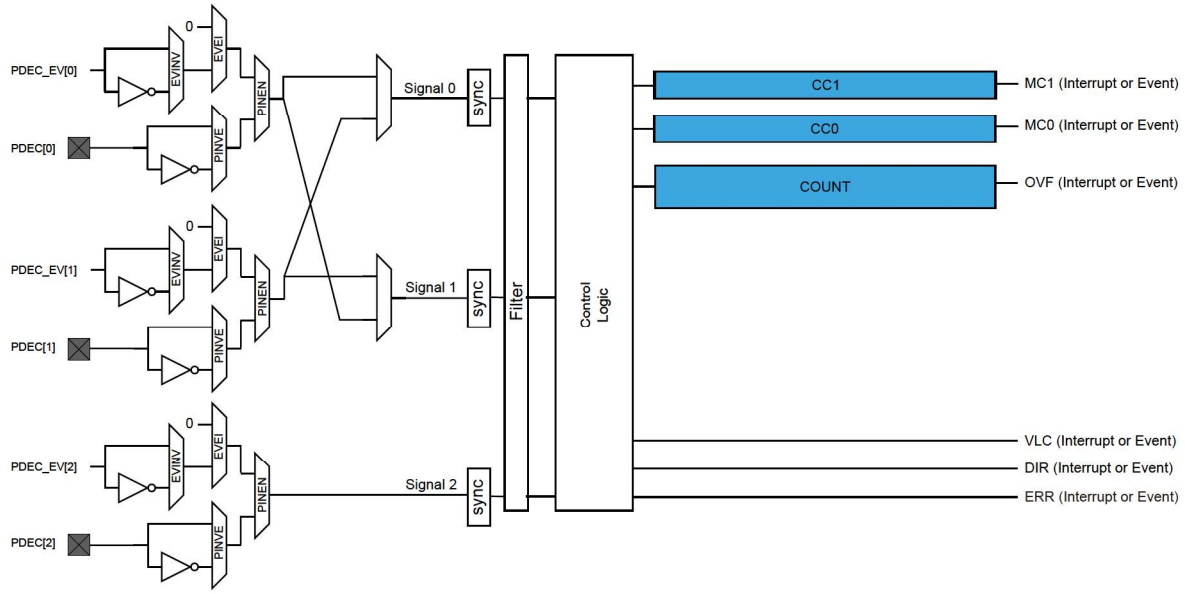

42.4 Signal Description

Signal Name	Type	Description
PDEC[2:0]	Digital input	PDEC inputs

Note: One signal can be mapped on one of several pins.

42.5 Peripheral Dependencies

Peripheral	Base Address	IRQ	AHB CLK	APB CLK	Generic CLK	PAC		Events		DMA	Sleep Walking
			Enabled at reset	Enabled at reset	Index	Index	Prot at reset	User	Generator	Index	
PDEC	0x42006800	26	-	N	34	26	N	44: EVU0	83: OVF	-	Y
									84: ERR		
								45: EVU1	85: DIR		
									86: VLC		
								46:EVU2	87:MC0		
									88: MC1		

42.6 Functional Description

42.6.1 Principle of Operation

The PDEC control logic can be driven by a set of three inputs signal coming from Event System channels or I/O input pins. These three inputs can be filtered prior to down-stream processing. The input polarity, phase definition and other factors are configurable. QDEC, HALL or COUNTER mode of operation are supported.

Depending of the mode configuration, specific input sequences can generate:

- State change
- Counter increment or decrement
- Interrupts
- Output events

42.6.2 Basic Operation

42.6.2.1 Initialization

The following PDEC registers are enable-protected, meaning they can only be written when the PDEC is disabled (CTRLA.ENABLE is zero):

- Event Control register (EVCTRL)

Enable-protection is denoted by the 'Enable-Protected' property in the register description.

The following register bits are enable-protected, meaning that they can only be written when the PDEC is disabled (CTRLA.ENABLE=0):

- Maximum Consecutive Missing Pulses bits in Control A register (CTRLA.MAXCMP[3:0])
- Angular Counter Length bits in Control A register (CTRLA.ANGULAR[2:0])
- I/O Pin x Invert Enable bits in Control A register (CTRLA.PINVEN[2:0])
- PDEC Input From Pin x Enable bits in Control A register (CTRLA.PINEN[2:0])
- Period Enable bit in Control A register (CTRLA.PEREN)
- PDEC Phase A and B Swap bit in Control A register (CTRLA.SWAP)
- Auto Lock bit in Control A register (CTRLA.ALOCK)
- PDEC Configuration bits in Control A register (CTRLA.CONF[2:0])
- Run in Standby bit in Control A register (CTRLA.RUNSTDBY)
- Operation Mode bits in Control A register (CTRLA.MODE[1:0])

Enable-protected bits in the CTRLA register can be written at the same time as CTRLA.ENABLE is written to '1', but not at the same time as CTRLA.ENABLE is written to '0'.

42.6.2.2 Enabling, Disabling, and Resetting

The PDEC must be configured before it is enabled by the following steps:

1. Enable the PDEC bus clock (CLK_PDEC_APB).
2. Select the mode of operation by writing the Mode bits in the Control A register (CTRLA.MODE).
3. Select the PDEC mode configuration by writing the Configuration bits in the Control A register (CTRLA.CONF).
4. Select the PDEC event or pin input signal source by writing the Event Enable Input bit in the Event Control register (EVCTRL.EVEI) or the Pin Enable bit in Control A register (CTRLA.PINEN).
5. Select the angular counter length value by writing the Angular bits in the Control A register (CTRLA.ANGULAR).

Optionally, the following configurations can be set before enabling PDEC:

- The GCLK_PDEC clock can be prescaled by writing to the Prescaler register (PRESC).
- A filter can be applied to the input signal by writing a corresponding value to the Filter register (FILTER).
- If the resolution of the rotary sensor is not a power of 2, an Angular period can be set (CTRLA.PEREN and CC0 register).

The PDEC is enabled by writing a '1' to the Enable bit in the Control A register (CTRLA.ENABLE). The PDEC is disabled by writing a '0' to CTRLA.ENABLE.

In QDEC or HALL operation modes, PDEC decoding is enabled writing a START command in the Control B Set register (CTRLBSET.CMD=START). The PDEC decoding is disabled writing a STOP command in the Control B Set register (CTRLBSET.CMD=STOP).

The PDEC is reset by writing a '1' to the Software Reset bit in the Control A register (CTRLA.SWRST). All registers in the PDEC, except DBGCTRL, will be reset to their initial state, and the PDEC will be disabled.

The PDEC should be disabled before the PDEC is reset to avoid undefined behavior.

42.6.2.3 Prescaler Selection

The GCLK_PDEC is fed into the internal prescaler. Prescaler outputs from 1 to 1/1024 are directly available for selection by the counter and all selections are available in Prescaler register (PRESC). If the prescaler value is higher than 0x01, the counter update condition is executed on the next prescaled clock pulse.

The prescaler clock is also enabled when the input filtering is required.

Figure 42-2. Prescaler Selection

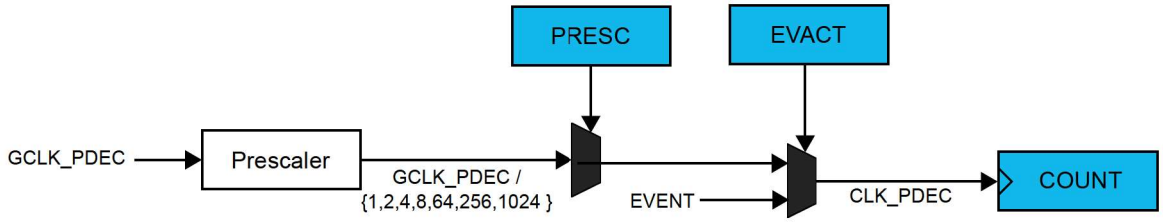

42.6.2.4 Input Selection and Filtering

The QDEC and HALL operations require three inputs, as shown in the Block Diagram. Each input can either be a dedicated I/O pin or an Event system channel. This is selected by writing to the corresponding Event x Enable bit in the Event Control register (EVCTRL.EVEIx) or Pin x Enable bit in the Control A register (CTRLA.PINENx).

The I/O input pin active level can be inverted by writing to the corresponding Pin x Inversion Enable bit in Control A register (CTRLA.PINVENx). In the same way, the event input active level can be inverted by writing to the corresponding Inverted Event x Input Enable bit in Event Control register (EVCTRL.EVINVx).

All input signals can be filtered before they are fed into the control logic. The FILTER register is used to configure the minimum duration for which the input signal has to be valid. The input signal minimum duration must be FILTER* t_{GCLK_PDEC} .

Figure 42-3. Input Signal Filtering

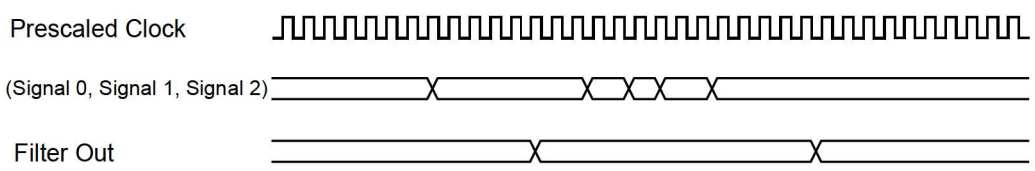

Only the first two input signals can be swapped by writing to the SWAP bit in the Control A register (CTRLA.SWAP).

42.6.2.5 Period Control

The Channel Compare 0 register (CC0) can act as a period register (PER) by writing the PEREN bit in the Control A register (CTRLA.PEREN) to '1'. The PER can be used to control the top value (TOP) of the counting operation:

When up-counting and the counter reaches the value of CC0, the counter is cleared to zero. When down-counting and the counter reaches zero, the counter is reloaded with the CC0 value.

42.6.2.6 QDEC Operation Mode

In QDEC mode of operation, Signal 0 and Signal 1 control logic inputs refer to Phase A and Phase B in X4 mode, and to count/direction in X2 mode. The Signal 2 control logic input refers to the Index, in both X4 and X2 mode of

operation. In X4 mode, a simultaneous transition on Phase A and Phase B will cause a QDEC error detection (STATUS.QERR).

Figure 42-4. QDEC Block Diagram

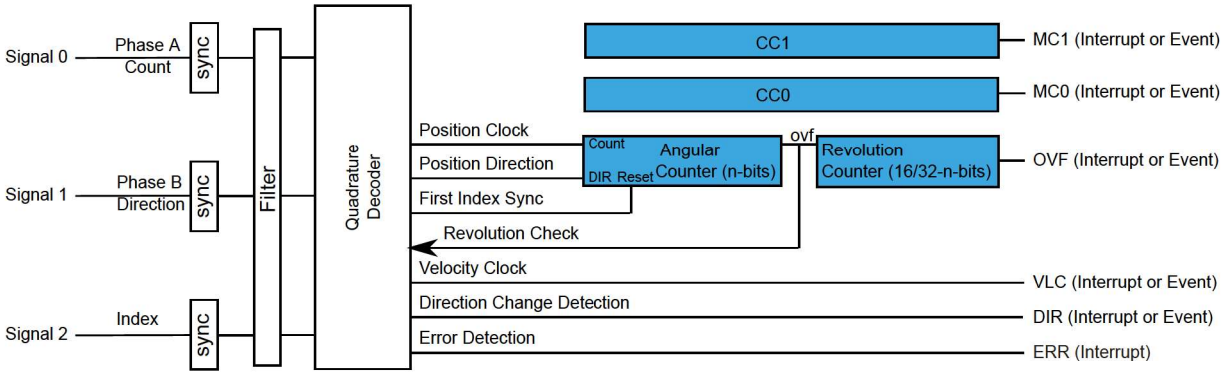

42.6.2.6.1 Position and Rotation Measurement

After filtering, the quadrature signals are analyzed to extract the rotation direction and edges in order to be counted by the counter.

The counter is split in two parts. The LSB part of the counter is used as Angular counter. The Phase A and B define the motor deplacement direction, which define the Angular and Revolution counting direction.

The Index can be enabled in two different ways:

- Set the PINEN[2] bit in the Control A register (CTRLA.PINEN[2]), if the Index is provided by the PIN2 IO pin directly
- Set the EVEI[2] bit in Event Control register (EVCTRL.EVEI[2]), if the INDEX is provided by a channel connected to the Event System
- If the signal polarity must be inverted, the user must program the PINVEN[2] in Control A register (CTRLA.PINVEN[2]) or EVINV[2] in Event Control register (EVCTRL.EVINV[2])

A valid Index is qualified with the two other inputs (PhaseA, PhaseB) at low level.

Each counter has a TOP value, defined as follows:

- If the Period is disabled (CTRLA.PEREN = 0), the TOP value for each counter represents the MAX value (all bit are one)
- If the Period is enabled (CTRLA.PEREN = 1), the Angular counter TOP value is the CC0 LSB portion, and the Revolution counter TOP value is the CC0 MSB portion. Refer to CTRLA.ANGULAR settings for details.

The "Signal 0" and "Signal 1" (refer to Figure 2-1 for details) edge detections define the motor axis position, which increments or decrements the Angular counter. The Angular counter will count up or down, depending on the counting direction. The counter is reloaded with its TOP or ZERO value depending on counting direction.

When the Index detection is disabled, the Angular counter is reloaded with its TOP or ZERO, depending on counter direction only, when the overflow (angular counter equals its TOP) or underflow (angular counter equals zero) conditions are met.

- When the counter is counting up and its TOP value is reached, the counter will be reloaded with ZERO value on the next tick (overflow) and the Overflow Interrupt Flag in the Interrupt Flag Status and Clear register (INTFLAG.OVF) will be set.
- When the counter is counting down and ZERO is reached, the counter will be reloaded with its TOP value on the next tick (underflow), and the INTFLAG.OVF will be set. INTFLAG.OVF can be used to trigger an interrupt or an event.

When the Index is enabled, additional actions will occur, depending on operating configuration (CTRLA.CONF):

- In X2 and X4 confirmation operating mode:
  - When the counter is counting up, a valid Index detection will reload the counter with ZERO value
  - When the counter is counting down, a valid Index detection will reload the counter with its TOP value
- In X2S and X4S confirmation operating mode:

  - The first valid Index detection after the module is enabled, will reload the counter with ZERO value
  - Any other valid Index detection which does not match the Angular counter overflow or underflow, will set the Index Error flag in Status register (STATUS.IDXERR). The Error Interrupt Flag is set (INTFLAG.ERR)and an optional interrupt can be generated.

The Revolution counter will count up or down, depending on the counting direction and configuration modes:

- In X2 and X4 confirmation operating mode:
  - If the Index is enabled, the counter is incremented (or decremented depending on counting direction) on each index detection
  - If the Index is disabled, the counter is incremented (or decremented depending on counting direction) on each Angular counter overflow/underflow
- In X2S and X4S confirmation operating mode, the counter is incremented (or decremented depending on counting direction) on each Angular counter overflow/underflow
  - If the Index is not detected after one Angular counter revolution, the Index Error flag in Status register (STATUS.IDXERR) is set. The Error Interrupt Flag is set (INTFLAG.ERR) and an optional interrupt can be generated.

When counting-up and its TOP value is reached, the Channel 0 Compare Match Interrupt Flag in the Interrupt Flag Status and Clear register (INTFLAG.MC0) will be set. When counting-down and ZERO is reached, the INTFLAG.MC0 will be set. The Channel 0 Compare Match condition can be enabled as source of interrupt or event generation.

Figure 42-5. Position and Rotation Measurement

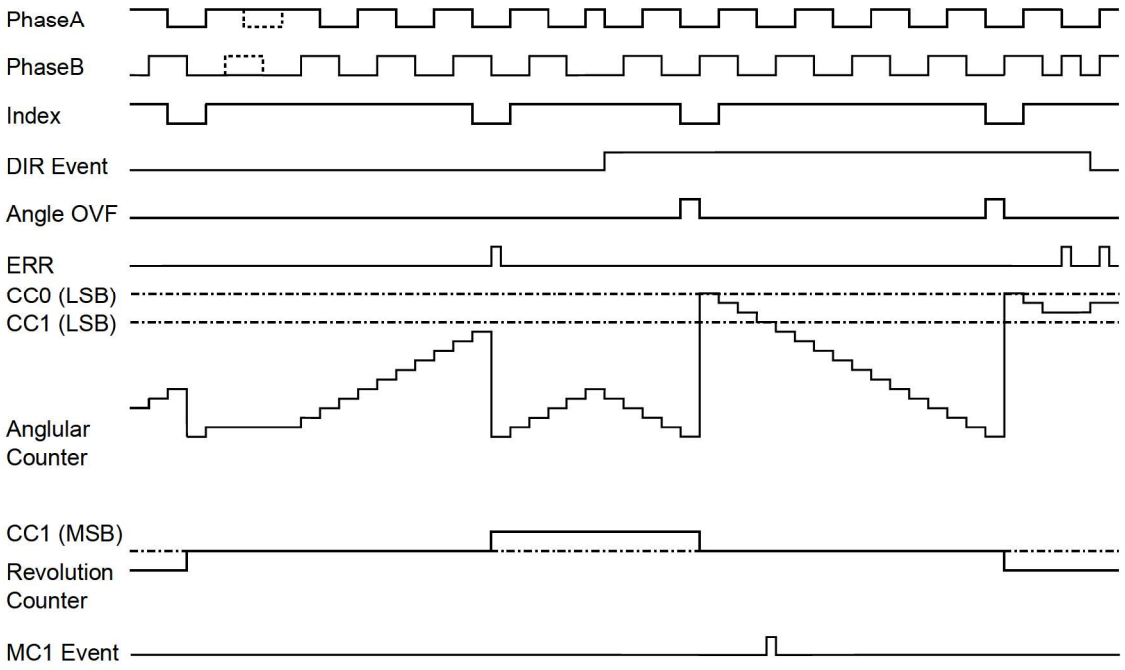

In X4 and X4S configuration, a valid index is detected when the three inputs (PhaseA, PhaseB and Index) are at low level.

In X2 and X2S configuration, a valid index is detected when the two inputs (Count and Index) are at low level.

In X2 and X4 configuration, depending on current detected direction, Index will reset or reload the Angular counter and increment or decrement the Revolution counter.

In X2S and X4S configuration, the Angular counter is reset on the first Index occurrence after the PDEC decoding is enabled. When any next Index occurrence does not match an Angular counter overflow or underflow, the Index Error

flag in Status register is set (STATUS.IDXERR). The Error Interrupt Flag is set (INTFLAG.ERR) and an optional interrupt can be generated.

An Index Error is also generated after the PDEC decoding is enabled and no Index has been detected after one Angular counter revolution.

42.6.2.6.2 Secure Decoder Detection

Position decoders are generally implemented using external photo-detectors, detecting a transmitted or reflected beam. Error detections or no detections may happen, and are due to:

- A transmitted bean locally stopped by a dust
- A reflected beam lost by a mat dust
- An additional parasitic reflected beam, due to a gloss metallic dust

When secure detection is enabled (CTRLA.CONF = X4S or CTRLA.CONF = X2S), the Index must be enabled. The Angular counter is restarted on the detection of each overflow. When the Angular counter value reaches its maximum period value (TOP), an Index is expected to be detected. In the same way, if the Index is detected, the Angular counter value is expected to be TOP. If one of these conditions is not met, an error is generated.

Note: The first error generation is masked, as the initial position of the wheel is in unknown state. The first index is used to synchronize the Angular counter on Revolution counter increment.

Figure 42-6. Secure Decoder Detections

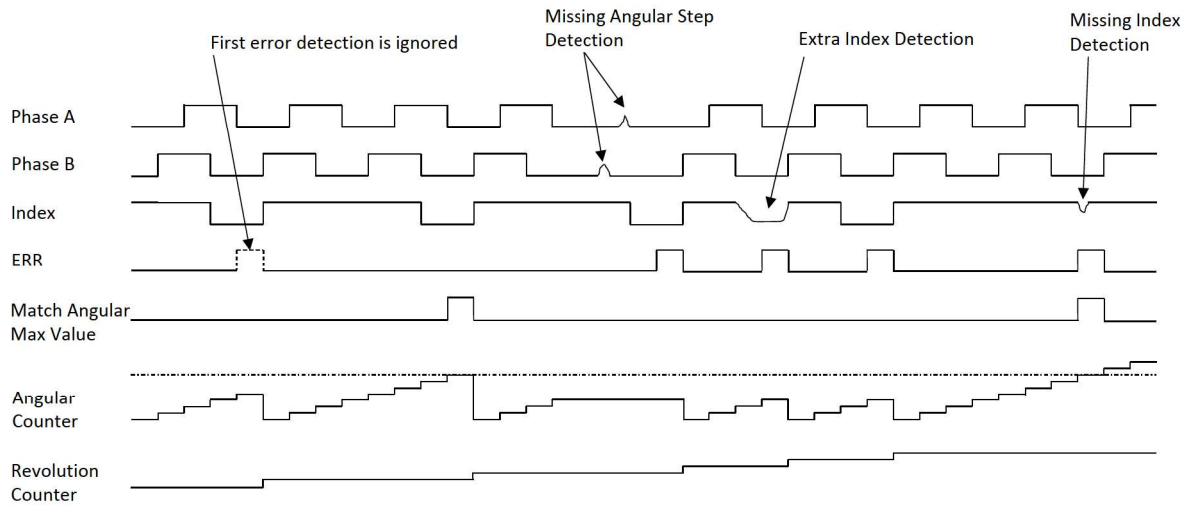

42.6.2.6.3 Direction Status and Change Detection

The direction (DIR) status can be directly read anytime in the STATUS register (STATUS.DIR). The polarity of the direction flag status depends of the input signal swap and active level configuration.

Each time a rotation direction change is detected, the Direction Change Interrupt Flag is set (INTFLAG.DIR) and an optional interrupt can be generated. The same interrupt condition is source of Direction event output.

Figure 42-7. Rotation Direction Change

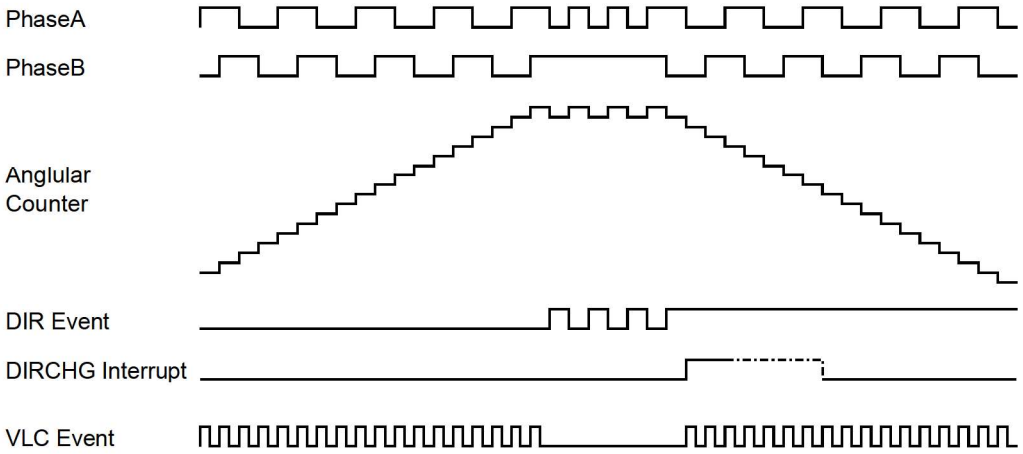

To avoid spurious interrupts when coding wheel is stopped, the direction change condition is reported as an interrupt, only on the second edge confirming the direction change.

Velocity output event is generated on each QDEC transition except when the direction changes.

42.6.2.6.4 Speed Measurement

Three types of speed measurement can be done using velocity event output (VLC) and Timer/Counter (TC/TCC) device resources.

- Continuous velocity measurement: TCz measures the time on which n VLC (TCy) output events occur
- Synchronous Velocity measurement: On a specific motor position TCCz, the time is measured on which n VLC (TCCy) output events occur.
- Slow Velocity measurement: measure the number of VLC output events (TCCy) plus the delay since the last VLC output event (TCCz) within a given time slot (TCk).

Figure 42-8. Speed Measurement

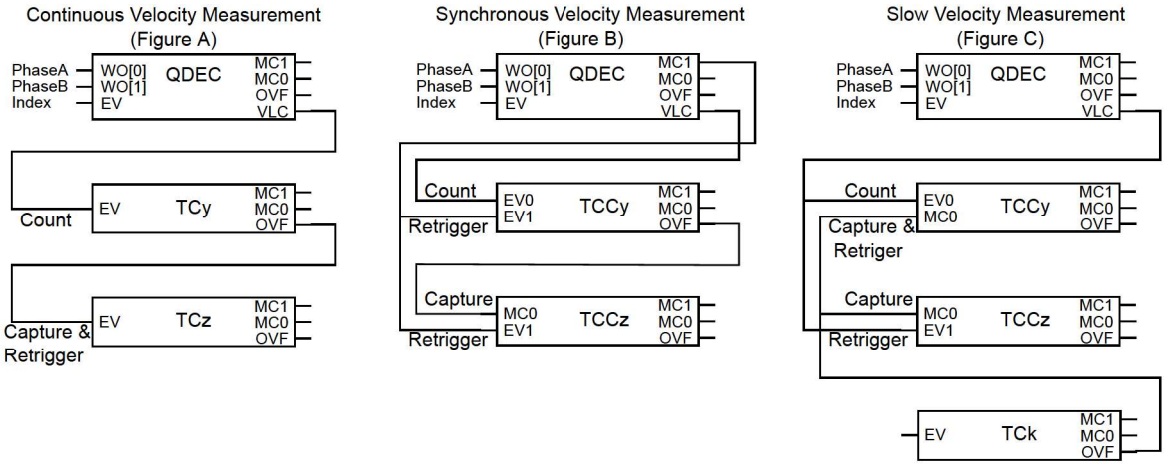

42.6.2.6.5 Missing Pulse Detection and Auto-Correction

The PDEC embeds circuitry to detect and correct errors that may result from contamination on optical disks or other sources producing quadrature phase signals.

The auto-correction works in QDEC X4 mode only. A missing pulse on a phase signal is automatically detected, and the pulse count reported in the Angular part of COUNT is automatically corrected.

There is no autocorrection if both phase signals are affected at the same location on the input signals, because the autocorrection requires a valid phase signal to detect contamination on the other phase signal.

If the quadrature source is undamaged, the number of pulses counted for a predefined period of time must be the same with or without detection and auto-correction. Therefore, if the measurement results differ, a contamination exists on the source producing the quadrature signals. This does not substitute the measurements of the number of pulses between two index pulses (if available) but provides an additional method to detect damaged quadrature sources.

When the source providing quadrature signals is strongly damaged, potentially leading to a number of consecutive missing pulses greater than 1, the quadrature decoder processing may be affected.

The Maximum Consecutive Missing Pulses bits in Control A register (CTRLA.MAXCMP) define the maximum acceptable number of consecutive missing pulses. If the limit is reached, the Missing Pulse Error flag in Status register (STATUS.MPERR) is set. The Error Interrupt flag is set (INTFLAG.ERR) and an optional interrupt can be generated.

Note: When the MAXCMP value is zero, the MPERR error flag is never set.

42.6.3 Additional Features

42.6.3.1 HALL Operation Mode

In HALL operation mode, control logic signal 0, 1 and 2 inputs represent the phase A, B and C of a Hall sensor, respectively.

A programmable delayed event can be generated to update a TCC pattern generator.

Figure 42-9. HALL Block Diagram

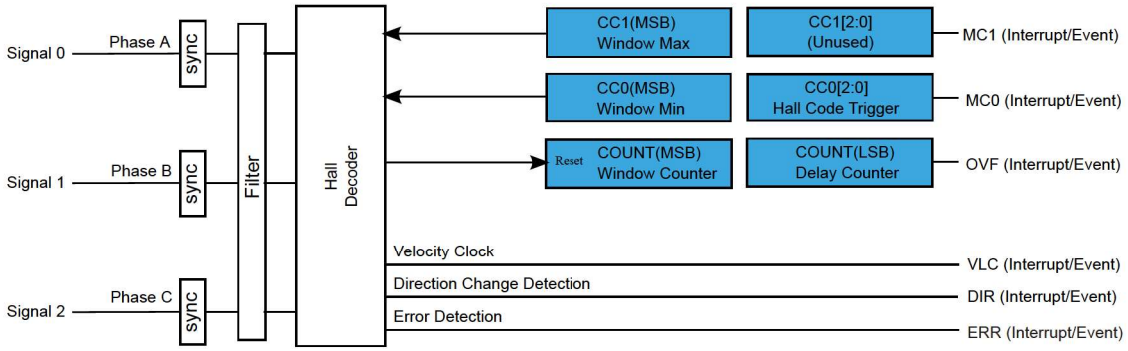

When positive rotation is detected, the DIR status bit is set (STATUS.DIR = 1). When a negative rotation sequence is detected, the DIR status bit is set (STATUS.DIR = 0).

Figure 42-10. Hall States Overview

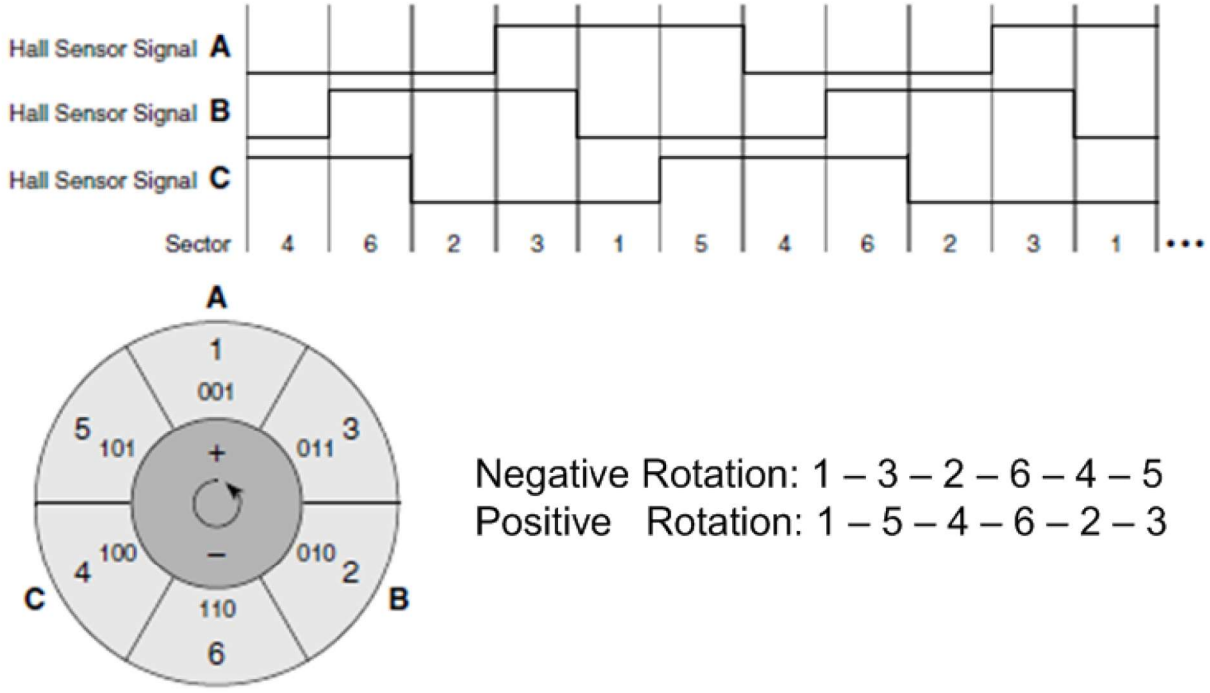

42.6.3.1.1 Hall Sensor Control

On any update of the filter output:

- The filter output value is checked to be a valid Hall value. If an invalid Hall code is reported, the Hall Error bit in Status register will be set (STATUS.HERR).
- The OVF Interrupt Flag bit is set (INTFLAG.OVF) if CC0[2:0] matches the filter output value, stored in LSB part of the COUNTER. An optional overflow interrupt or Event output is generated on the same condition detection.
- The window counter is checked to be between the value of the MSB part of CC0 and CC1, and reset to 0 value. If an error is detected, the Window Error bit in Status register (STATUS.WINERR) is set.
- The delay counter is started, and MC0 optional interrupt or event is generated when the delay counter matches the MSB part of CC0.
- Optional MC1 interrupt or event is generated when the delay counter matches the MSB part of CC1

Any error condition will set the Error Interrupt Flag (INTFLAG.ERR). An optional interrupt or event output is generated on the same condition detection.

Figure 42-11. Hall Waveforms

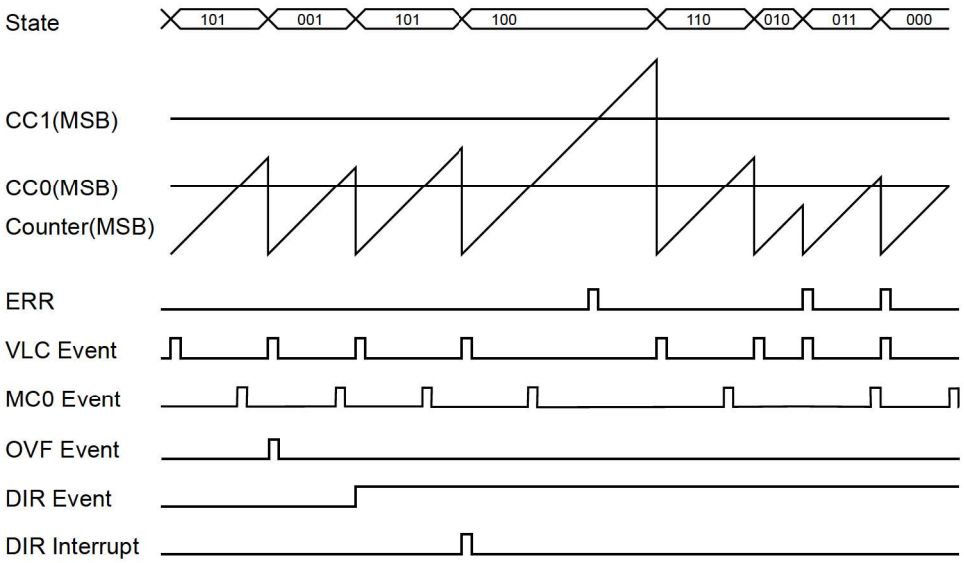

42.6.3.2 Counter Operation Mode

Depending on the mode of operation, the counter (Counter Value register COUNT) is cleared, reloaded, or incremented at each counter clock input.

The counter will count for each clock tick until it reaches TOP. When TOP is reached, the counter will be set to zero on the next clock input.

This comparison will set the Overflow Interrupt Flag in the Interrupt Flag Status and Clear register (INTFLAG.OVF) and can be used to trigger an interrupt or an event.

It is possible to change the counter value when the counter is running. The write access has higher priority than count, or clear. The COUNT value will always be zero when starting the PDEC, unless a different value has been written to it, or the PDEC has been disabled at a value other than zero. Due to asynchronous clock domains, the internal counter settings are written once the synchronization is complete.

42.6.3.3 Register Lock Update

Prescaler (PRESC), FILTER, and CCx registers are buffered (PRESCBUF, FILTERBUF, CCBUFx registers, respectively). When a new value is written in a buffer register, the corresponding Buffer Valid bit is set in the Buffer Status register (STATUS.FILTERBUFV, STATUS.PRESCBUFV, STATUS.CCBUFVx).

By default, a register is updated with its buffer register's value on UPDATE condition, which represents:

- The next filter transition in QDEC and HALL mode of operation
- The overflow/underflow or re-trigger event detection in COUNT mode of operation

The buffer valid flags in the STATUS register are automatically cleared by hardware when the data is copied from the buffer to the corresponding register.

It is possible to lock the updates by writing a '1' to the Lock Update bit in Control B Set register (CTRLBSET.LUPD).

The lock feature is disabled by writing a '1' to the Lock Update bit in Control B Clear register (CTRLBCLR.LUPD). When a buffer valid status flag is '1' and updating is not locked, the data from the buffer register will be copied into the corresponding register on UPDATE condition.

It is also possible to modify the LUPD bit behavior by hardware, by writing a '1' to the Auto-lock bit in Control A register (CTRLA.ALOCK). When the bit is '1', the Lock Update bit in Control B register (CTRLBSET.LUPD) is set when the UPDATE condition is detected.

42.6.3.4 Software Command and Event Actions

The PDEC peripheral supports software commands and event actions. The software commands are applied by the Software Command bit field in the Control B register (CTRLBSET.CMD, CTRLBCLR.CMD). The event actions are available in the Event Action bit-field in Event Control register (EVCTRL.EVACT).

42.6.3.4.1 Re-trigger Software Command or Event Action

A re-trigger command can be issued from software by using PDEC Command bits in Control B Set register (CTRLBSET.CMD = RETRIGGER) or when the re-trigger event action is configured in the Input Event Action bits in Event Control register (EVCTRL.EVACT = RETRIGGER) and an event is detected by hardware.

When the re-trigger command is detected during counting operation, the counter will be reloaded or cleared, depending on the counting direction (DIR). If the re-trigger command is detected when the counter is stopped, the counter will resume counting operation from the value in the COUNT register.

Note: When re-trigger event action is enabled, enabling the counter will start the counter. The counter will be reset on the next incoming event and restart on any following event.

42.6.3.4.2 Force Update Software Command

A Force Update command can be issued by writing the PDEC Command bits in Control B Set register (CTRLBSET.CMD = UPDATE). When the command is issued, the buffered registers will be updated.

42.6.3.4.3 Force Read Synchronization Software Command

A Force Read Synchronization command can be issued writing the PDEC Command bits in Control B Set register (CTRLBSET.CMD = READSYNC). When the command is issued, a COUNT register read synchronization is forced.
Note: This command should be used to read the most updated COUNT internal value.

42.6.4 Interrupts

The PDEC has the following interrupt sources:

- Overflow/Underflow: OVF
- Compare Channels: COMPx
- Error: ERR
- Velocity: VLC. This interrupt is available only in QDEC and HALL operation modes.
- Direction: DIR. This interrupt is available only in QDEC and HALL operation modes.

Each interrupt source has an interrupt flag associated with it. The interrupt flag in the Interrupt Flag Status and Clear register (INTFLAG) is set when the interrupt condition occurs. Each interrupt can be individually enabled by writing a '1' to the corresponding bit in the Interrupt Enable Set register (INTENSET), and disabled by writing a '1' to the corresponding bit in the Interrupt Enable Clear register (INTENCLR). As both INTENSET and INTENCLR always reflect the same value, the status of interrupt enablement can be read from either register.

An interrupt request is generated when the interrupt flag is set and the corresponding interrupt is enabled. The interrupt request remains active until the interrupt flag is cleared, the interrupt is disabled or the PDEC is reset. See the INTFLAG register description for details on how to clear interrupt flags.

The user must read the INTFLAG register to determine which interrupt condition is present.
Note: Interrupts must be globally enabled for interrupt requests to be generated. See the Nested Vector Interrupt Controller.

42.6.5 Events

The PDEC can generate the following output events:

- Overflow/Underflow: OVF
- Channel x Compare Match: MCx
- Error: ERR
- Velocity: VLC. This interrupt is available only in QDEC and HALL operation modes.
- Direction: DIR. This interrupt is available only in QDEC and HALL operation modes.

Writing a '1' to an Event Output bit in the Event Control register (EVCTRL.MCEO) enables the corresponding output event. Writing a '0' to this bit disables the corresponding output event.

In counter mode the PDEC can take action on an input event. PDEC counter event input are available for each of the three PDEC channels.

- Retrigger: Restart/retrigger on event

See the EVSYS for further information.

42.6.6 Sleep Mode Operation

The PDEC can be configured to operate in any sleep mode. To be able to run in standby, the RUNSTDBY bit in the Control A register (CTRLA.RUNSTDBY) must be written to '1'. The PDEC can wake up the device using interrupts from any sleep mode or perform actions through the Event System.

For more information, refer to:

- 16. Power Manager (PM)
- 16.5.3.3 Sleep Mode Controller

42.6.7 Synchronization

Due to asynchronicity between the main clock domain and the peripheral clock domains, some registers need to be synchronized when written or read.

The following bits are synchronized when written:

- Software Reset bit in the Control A register (CTRLA.SWRST)
- Enable bit in the Control A register (CTRLA.ENABLE)

The following registers need synchronization when written:

- Control B Clear and Control B Set registers (CTRLBCLR and CTRLBSET)
- Status register (STATUS)
- Prescaler and Prescaler Buffer registers (PRESC and PRESCBUF)
- Compare Value x and Compare Value x Buffer registers (CCx and CCBUFx)
- Filter Value and Filter Buffer Value registers (FILTER and FILTERBUF)
- Counter Value register (COUNT)

Required write synchronization is denoted by the "Write-Synchronized" property in the register description.

The following registers are synchronized when read:

- Counter Value register (COUNT): the synchronization is done on demand through READSYNC software command (CTRLBSET.CMD)

Required read synchronization is denoted by the "Read-Synchronized" property in the register description.

42.7 Register Summary

Offset	Name	Bit Pos.	7	6	5	4	3	2	1	0
0x00	CTRLA	7:0		RUNSTDBY			MODE[1:0]		ENABLE	SWRST
		15:8	PEREN	SWAP			ALOCK	CONF[2:0]		
		23:16		PINVEN2	PINVEN1	PINVEN0		PINEN2	PINEN1	PINEN0
		31:24	MAXCMP[3:0]					ANGULAR[2:0]		
0x04	CTRLBCLR	7:0	CMD[2:0]						LUPD	
0x05	CTRLBSET	7:0	CMD[2:0]						LUPD	
0x06	EVCTRL	7:0	EVEI[2:0]			EVINV[2:0]			EVACT[1:0]	
		15:8			MCEO1	MCEO0	VLCEO	DIREO	ERREO	OVFEO
0x08	INTENCLR	7:0			MC1	MC0	VLC	DIR	ERR	OVF
0x09	INTENSET	7:0			MC1	MC0	VLC	DIR	ERR	OVF
0x0A	INTFLAG	7:0			MC1	MC0	VLC	DIR	ERR	OVF
0x0B	Reserved									
0x0C	STATUS	7:0	DIR	STOP	HERR	WINERR		MPERR	IDXERR	QERR
		15:8			CCBUFV1	CCBUFV0			FILTERBUFV	PRESCBUFV
0x0E	Reserved									
0x0F	DBGCTRL	7:0								DBGRUN
0x10	SYNCBUSY	7:0	CC0	COUNT	FILTER	PRESC	STATUS	CTRLB	ENABLE	SWRST
		15:8								CC1
		23:16								
		31:24								
0x14	PRESC	7:0					PRESC[3:0]			
0x15	FILTER	7:0	FILTER[7:0]							
0x16 ... 0x17	Reserved									
0x18	PRESCBUF	7:0					PRESCBUF[3:0]			
0x19	FILTERBUF	7:0	FILTERBUF[7:0]							
0x1A ... 0x1B	Reserved									
0x1C	COUNT	7:0	COUNT[7:0]							
		15:8	COUNT[15:8]							
		23:16								
		31:24								
0x20	CC0	7:0	CC[7:0]							
		15:8	CC[15:8]							
		23:16								
		31:24								
0x24	CC1	7:0	CC[7:0]							
		15:8	CC[15:8]							
		23:16								
		31:24								
0x28 ... 0x2F	Reserved									
0x30	CCBUF0	7:0	CCBUF[7:0]							
		15:8	CCBUF[15:8]							
		23:16								
		31:24								
0x34	CCBUF1	7:0	CCBUF[7:0]							
		15:8	CCBUF[15:8]							
		23:16								
		31:24								

42.7.1 Control A

Name: CTRLA
Offset: 0x00
Reset: 0x00000000
Property: PAC Write-Protection, Enable-Protected Bits, Write-Synchronized Bits

Bit	31	30	29	28	27	26	25	24
	MAXCMP[3:0]					ANGULAR[2:0]		
Access	RW	RW	RW	RW		RW	RW	RW
Reset	0	0	0	0		0	0	0

Bit	23	22	21	20	19	18	17	16
		PINVEN2	PINVEN1	PINVEN0		PINEN2	PINEN1	PINEN0
Access		RW	RW	RW		RW	RW	RW
Reset		0	0	0		0	0	0

Bit	15	14	13	12	11	10	9	8
	PEREN	SWAP			ALOCK	CONF[2:0]		
Access	RW	RW			RW	RW	RW	RW
Reset	0	0			0	0	0	0

Bit	7	6	5	4	3	2	1	0
		RUNSTDBY			MODE[1:0]		ENABLE	SWRST
Access		RW			RW	RW	RW	W
Reset		0			0	0	0	0

Bits 31:28 – MAXCMP[3:0] Maximum Consecutive Missing Pulses
These bits define the threshold for the maximum consecutive missing pulses in AUTOC configuration of the QDEC mode.
Outside of AUTOC configuration of QDEC mode, these bits have no effect.
Note: This bit field is enable-protected. This bit field is not synchronized.

Bits 26:24 – ANGULAR[2:0] Angular Counter Length
In QDEC mode, these bits define the size of the Angular counter within COUNT. Angular counter size is equal to CTRLA.ANGULAR+9. The remaining MSB of the COUNTER register are used for counting revolutions.
For example, CTRLA.ANGULAR=0 defines the 9 LSB of COUNT as Angular counter and the residual 7 MSB of COUNT as Revolution counter. CTRLA.ANGULAR=7 will define a 16-bit Angular counter and no Revolution counter.
Outside of QDEC mode, these bits have no effect.
Note: This bit field is enable-protected. This bit field is not synchronized.

Table 42-1. Angular and Revolution Counters in COUNTER Register

ANGULAR[2:0]	Angular counter	Revolution counter
0x0	COUNTER[0:8]	COUNTER[9:15]
0x1	COUNTER[0:9]	COUNTER[10:15]
0x2	COUNTER[0:10]	COUNTER[11:15]
0x3	COUNTER[0:11]	COUNTER[12:15]
0x4	COUNTER[0:12]	COUNTER[13:15]
0x5	COUNTER[0:13]	COUNTER[14:15]
0x6	COUNTER[0:14]	COUNTER[15]
0x7	COUNTER[0:15]	no revolution counter

Bits 20, 21, 22 – PINVENx IO Pin x Invert Enable [x = 2..0]
When this bit is written to '1', the corresponding input pin active level is inverted. This bit has no effect if PINENx bit is zero.

In COUNTER mode only PINVEN[0] is significant.
Note: This bit is enable-protected. This bit is not synchronized.

Value	Description
0	Pin active level is not inverted.
1	Pin active level is inverted.

Bits 16, 17, 18 – PINENx PDEC Input From Pin x Enable [x = 2..0]
This bit enables the IO pin x as signal input.
In COUNTER mode, only PINEN[0] is significant.
Note: This bit is enable-protected. This bit is not synchronized.

Value	Description
0	Event line is the signal input.
1	I/O pin is the signal input.

Bit 15 – PEREN Period Enable
This bit is used to enable the CC0 register as counter period.
Note: This bit is enable-protected. This bit is not synchronized.

Value	Description
0	Period register function is disabled.
1	CC0 is acting as counter period register.

Bit 14 – SWAP PDEC Phase A and B Swap
This bit is used to swap input source of signal 0 and 1.
In COUNTER mode this bit has no effect.
Note: This bit is enable-protected. This bit is not synchronized.

Value	Description
0	The input sources of signal 0 and 1 are not swapped.
1	The input sources of signal 0 and 1 are swapped.

Bit 11 – ALOCK Auto Lock
When this bit is set, the Lock Update bit in Control B register (CTRLB.LUPD) is set by hardware when an UPDATE condition is detected.
Note: This bit is enable-protected. This bit is not synchronized.

Value	Description
0	Auto Lock is disabled.
1	Auto Lock is enabled.

Bits 10:8 – CONF[2:0] PDEC Configuration
These bits define the PDEC configuration.
Outside of QDEC mode, these bits have no effect.
Note: This bit field is enable-protected. This bit field is not synchronized.

Value	Name	Description
0	X4	Quadrature decoder direction
1	X4S	Secure Quadrature decoder direction
2	X2	Decoder direction
3	X2S	Secure decoder direction
4	AUTOC	Auto correction mode

Bit 6 – RUNSTDBY Run in Standby
This bit is used to keep the PDEC running in standby mode.
Note: This bit is enable-protected. This bit is not synchronized.

Value	Description
0	The PDEC is halted in standby.
1	The PDEC continues to run in standby.

Bits 3:2 – MODE[1:0] Operation Mode
These bits select one of the QDEC, HALL, COUNTER modes.
Note: This bit field is enable-protected. This bit field is not synchronized.

Value	Name	Description
0x0	QDEC	QDEC operating mode
0x1	HALL	HALL operating mode
0x2	COUNTER	COUNTER operating mode

Bit 1 – ENABLE Enable
Notes:

1. This bit is write-synchronized: SYNCBUSY.ENABLE must be checked to ensure the CTRLA.ENABLE synchronization is complete.
2. This bit is not enable-protected.

Value	Description
0	The peripheral is disabled.
1	The peripheral is enabled.

Bit 0 – SWRST Software Reset
Writing a '0' to this bit has no effect.
Writing a '1' to this bit resets all registers in the PDEC (except DBGCTRL) to their initial state, and the PDEC will be disabled.
Writing a '1' to CTRLA.SWRST will always take precedence; all other writes in the same write-operation will be discarded.
Notes:

1. This bit is write-synchronized: SYNCBUSY.SWRST must be checked to ensure the CTRLA.SWRST synchronization is complete.
2. This bit is not enable-protected.

Value	Description
0	There is no Reset operation ongoing.
1	A Reset operation is ongoing.

42.7.2 Control B Clear

Name: CTRLBCLR
Offset: 0x04
Reset: 0x00
Property: PAC Write-Protection, Read-Synchronized, Write-Synchronized

This register allows the user to change this register without doing a read-modify-write operation. Changes in this register will also be reflected in the Control B Set (CTRLBSET) register.

Note: This register is write-synchronized: SYNCBUSY.CTRLB must be checked to ensure the CTRLBCLR register synchronization is complete.

Bit	7	6	5	4	3	2	1	0
	CMD[2:0]						LUPD	
Access	RW	RW	RW				RW	
Reset	0	0	0				0	

Bits 7:5 – CMD[2:0] Command
These bits can be used for software control of the PDEC. When a command has been executed, the CMD bit group will read back zero. The commands are executed on the next prescaled GCLK_PDEC clock cycle.
Writing a zero to this bit group has no effect.
Writing a valid value to these bits will clear the corresponding pending command.
Writing a '0' to these bits has no effect.
Writing a '1' to an individual bit will clear the corresponding bit.

Value	Name	Description
0	NONE	No action
1	RETRIGGER	Force a counter restart or re-trigger
2	UPDATE	Force update of double buffered registers
3	READSYNC	Force a read synchronization of COUNT
4	START	Start QDEC/HALL
5	STOP	Stop QDEC/HALL

Bit 1 – LUPD Lock Update
This bit controls the update operation of the PDEC buffered registers.
When CTRLB.LUPD is set, no any update of the registers with value of its buffered register is performed on hardware UPDATE condition. Locking the update ensures that all buffer registers are valid before an hardware update is performed. After all the buffer registers are loaded correctly, the buffered registers can be unlocked.
Writing a '0' to this bit has no effect.
Writing a '1' to this will disable the lock update.

Value	Description
0	The PRESCBUF, FILTERBUF and CCBUFx buffer registers value are copied into CCx and PER registers on hardware update condition.
1	The PRESCBUF, FILTERBUF and CCBUFx buffer registers value are not copied into CCx and PER registers on hardware update condition.

42.7.3 Control B Set

Name: CTRLBSET
Offset: 0x05
Reset: 0x00
Property: PAC Write-Protection, Read-Synchronized, Write-Synchronized

This register allows the user to change this register without doing a read-modify-write operation. Changes in this register will also be reflected in the Control B Clear (CTRLBCLR) register.
Note: This register is write-synchronized: SYNCBUSY.CTRLB must be checked to ensure the CTRLBSET register synchronization is complete.

Bit	7	6	5	4	3	2	1	0
	CMD[2:0]						LUPD	
Access	RW	RW	RW				RW	
Reset	0	0	0				0	

Bits 7:5 – CMD[2:0] Command
These bits can be used for software control of the PDEC. When a command has been executed, the CMD bit group will read back zero. The commands are executed on the next prescaled GCLK_PDEC clock cycle.
Writing a zero to this bit group has no effect.
Writing a valid value to these bits will set the associated command.

Value	Name	Description
0	NONE	No action
1	RETRIGGER	Force a counter restart or retrigger
2	UPDATE	Force update of double buffered registers
3	READSYNC	Force a read synchronization of COUNT
4	START	Start QDEC/HALL
5	STOP	Stop QDEC/HALL

Bit 1 – LUPD Lock Update
This bit controls the update operation of the PDEC buffered registers.
When CTRLB.LUPD is set, no any update of the registers with value of its buffered register is performed on hardware UPDATE condition. Locking the update ensures that all buffer registers are valid before an hardware update is performed. After all the buffer registers are loaded correctly, the buffered registers can be unlocked.
Writing a '1' to this will enable the Lock Update.

Value	Description
0	The PRESCBUF, FILTERBUF and CCBUFx buffer registers value are copied into CCx and PER registers on hardware update condition.
1	The PRESCBUF, FILTERBUF and CCBUFx buffer registers value are not copied into CCx and PER registers on hardware update condition.

42.7.4 Event Control

Name: EVCTRL
Offset: 0x06
Reset: 0x0000
Property: Enable-Protected, PAC Write-Protection

Bit	15	14	13	12	11	10	9	8
			MCEO1	MCEO0	VLCEO	DIREO	ERREO	OVFEO
Access			RW	RW	RW	RW	RW	RW
Reset			0	0	0	0	0	0

Bit	7	6	5	4	3	2	1	0
	EVEI[2:0]			EVINV[2:0]			EVACT[1:0]	
Access	RW	RW	RW	RW	RW	RW	RW	RW
Reset	0	0	0	0	0	0	0	0

Bits 12, 13 – MCEOx Match Channel x Event Output Enable [x = 1..0]
These bits control whether event match on channel x is enabled or not and generated for every match.

Value	Description
0	Match event on channel x is disabled and will not be generated.
1	Match event on channel x is enabled and will be generated for every compare.

Bit 11 – VLCEO Velocity Output Event Enable
This bit is used to enable the velocity event. When enabled, an event level will be generated for each change on the qualified PDEC phases.
This bit has no effect when COUNTER operation mode is selected.

Value	Description
0	VLC output event is disabled and will not be generated.
1	VLC output is enabled and will be generated for every valid velocity condition.

Bit 10 – DIREO Direction Output Event Enable
This bit is used to enable the Direction event. When enabled, an event level output is generated to report the rotation direction.

Value	Description
0	DIR output event is disabled and will not be generated.
1	DIR output is enabled and changes the level when the rotation direction changes.

Bit 9 – ERREO Error Output Event Enable
This bit enables the output of the Error event (ERR).

Value	Description
0	ERR Event output is disabled.
1	ERR Event output is enabled.

Bit 8 – OVFEO Overflow/Underflow Output Event Enable
This bit is used to enable the Overflow/Underflow event. When enabled, an event will be generated when the Counter overflows/underflows.

Value	Description
0	Overflow/Underflow event is disabled and will not be generated.
1	Overflow/Underflow event is enabled and will be generated for every counter overflow/underflow.

Bits 7:5 – EVEI[2:0] Event Input Enable
This bit is used to enable asynchronous input event for the Retrigger action. The bit position of the EVEI[2:0] bitfield corresponds with the PDEC channel number.

Value	Description
0	Incoming events are disabled.

Value	Description
1	Incoming events are enabled.

Bits 4:2 – EVINV[2:0] Inverted Event Input Enable
This bit inverts the asynchronous input event for the Retrigger action. The bit position of the EVINV[2:0] bitfield corresponds with the PDEC channel number.

Value	Description
0	Input event source is not inverted.
1	Input event source is inverted.

Bits 1:0 – EVACT[1:0] Event Action
These bits have an effect only when COUNTER operation mode is selected, and ignored in all other operation modes.
These bits define the event action the counter will perform on an event.

Value	Name	Description
0	OFF	Event action disabled
1	RETRIGGER	Start, restart or retrigger on event
2	Reserved	-

42.7.5 Interrupt Enable Clear

Name: INTENCLR
Offset: 0x08
Reset: 0x00
Property: PAC Write-Protection

This register allows the user to change this register without doing a read-modify-write operation. Changes in this register will also be reflected in the Interrupt Enable Set (INTENSET) register.

Bit	7	6	5	4	3	2	1	0
			MC1	MC0	VLC	DIR	ERR	OVF
Access			RW	RW	RW	RW	RW	RW
Reset			0	0	0	0	0	0

Bits 4, 5 – MCx Channel x Compare Match Disable [x = 1..0]
Writing a '0' to MCx has no effect.
Writing a '1' to MCx will clear the corresponding Match Channel x Interrupt Disable/Enable bit, which disables the Match Channel x interrupt.

Value	Description
0	The Match Channel x interrupt is disabled.
1	The Match Channel x interrupt is enabled.

Bit 3 – VLC Velocity Interrupt Disable
Writing a '0' to this bit has no effect.
Writing a '1' to this bit will clear the Velocity Interrupt Disable/Enable bit, which disables the Velocity interrupt.
This bit has no effect when COUNTER operation mode is selected.

Value	Description
0	The Velocity interrupt is disabled.
1	The Velocity interrupt is enabled.

Bit 2 – DIR Direction Interrupt Disable
Writing a '0' to this bit has no effect.
Writing a '1' to this bit will clear the Direction Change Interrupt Disable/Enable bit, which disables the Direction Change interrupt.
This bit has no effect when COUNTER operation mode is selected.

Value	Description
0	The Direction Change interrupt is disabled.
1	The Direction Change interrupt is enabled.

Bit 1 – ERR Error Interrupt Disable
Writing a '0' to this bit has no effect.
Writing a '1' to this bit will clear the Error Interrupt Disable/Enable bit, which disables the Error interrupt.

Value	Description
0	The Error interrupt is disabled.
1	The Error interrupt is enabled.

Bit 0 – OVF Overflow/Underflow Interrupt Disable
Writing a '0' to this bit has no effect.
Writing a '1' to this bit will clear the Overflow Interrupt Disable/Enable bit, which disables the Overflow interrupt.

Value	Description
0	The Overflow interrupt is disabled.
1	The Overflow interrupt is enabled.

42.7.6 Interrupt Enable Set

Name: INTENSET
Offset: 0x09
Reset: 0x00
Property: PAC Write-Protection

This register allows the user to change this register without doing a read-modify-write operation. Changes in this register will also be reflected in the Interrupt Enable Clear (INTENCLR) register.

Bit	7	6	5	4	3	2	1	0
			MC1	MC0	VLC	DIR	ERR	OVF
Access			RW	RW	RW	RW	RW	RW
Reset			0	0	0	0	0	0

Bits 4, 5 – MCx Channel x Compare Match Enable [x = 1..0]
Writing a '0' to MCx has no effect.
Writing a '1' to MCx will set the corresponding Match Channel x Interrupt Disable/Enable bit, which enables the Match Channel x interrupt.

Value	Description
0	The Match Channel x interrupt is disabled.
1	The Match Channel x interrupt is enabled.

Bit 3 – VLC Velocity Interrupt Enable
Writing a '0' to this bit has no effect.
Writing a '1' to this bit will set the Velocity Interrupt Disable/Enable bit, which enables the Velocity interrupt.
This bit has no effect when COUNTER operation mode is selected.

Value	Description
0	The Velocity interrupt is disabled.
1	The Velocity interrupt is enabled.

Bit 2 – DIR Direction Interrupt Enable
Writing a '0' to this bit has no effect.
Writing a '1' to this bit will set the Direction Change Interrupt Disable/Enable bit, which enables the Direction Change interrupt.
This bit has no effect when COUNTER operation mode is selected.

Value	Description
0	The Direction Change interrupt is disabled.
1	The Direction Change interrupt is enabled.

Bit 1 – ERR Error Interrupt Enable
Writing a '0' to this bit has no effect.
Writing a '1' to this bit will set the Error Interrupt Disable/Enable bit, which enables the Error interrupt.

Value	Description
0	The Error interrupt is disabled.
1	The Error interrupt is enabled.

Bit 0 – OVF Overflow/Underflow Interrupt Enable
Writing a '0' to this bit has no effect.
Writing a '1' to this bit will set the Overflow Interrupt Disable/Enable bit, which enable the Overflow interrupt.

Value	Description
0	The Overflow interrupt is disabled.
1	The Overflow interrupt is enabled.

42.7.7 Interrupt Flag Status and Clear

Name: INTFLAG
Offset: 0x0A
Reset: 0x00
Property: -

Bit	7	6	5	4	3	2	1	0
			MC1	MC0	VLC	DIR	ERR	OVF
Access			RW	RW	RW	RW	RW	RW
Reset			0	0	0	0	0	0

Bits 4, 5 – MCx Channel x Compare Match [x = 1..0]
This flag is set on the next CLK_PDEC_CNT cycle after a match with the compare condition, and will generate an interrupt request if the corresponding Match Channel x Interrupt Enable bit in the Interrupt Enable Set register (INTENSET.MCx) is '1'.
Writing a '0' to one of these bits has no effect.
Writing a '1' to one of these bits will clear the corresponding Match Channel x interrupt flag.

Bit 3 – VLC Velocity
This flag is set if a velocity transition occurs, and will generate an interrupt request if the Velocity Interrupt Enable bit in Interrupt Enable Set register (INTENSET.VLC) is '1'.
Writing a '0' to this bit has no effect.
Writing a '1' to this bit clears the Velocity transition interrupt flag.
This flag is never set when COUNTER operation mode is selected.

Bit 2 – DIR Direction Change
This flag is set if a direction change occurs, and will generate an interrupt request if the Direction Change Interrupt Enable bit in Interrupt Enable Set register (INTENSET.DIR) is '1'.
Writing a '0' to this bit has no effect.
Writing a '1' to this bit clears the Velocity transition interrupt flag.
This flag is never set when COUNTER operation mode is selected.

Bit 1 – ERR Error
This flag is set when an error condition is detected, and will generate an interrupt request if the Error Interrupt Enable bit in the Interrupt Enable Set register (INTENSET.ERR) is '1'. The error source can be identified by reading the Status (STATUS) register.
Writing a '0' to this bit has no effect.
Writing a '1' to this bit clears the Error interrupt flag.

Bit 0 – OVF Overflow/Underflow
This flag is set on the next CLK_TC_CNT cycle after an overflow condition occurs, and will generate an interrupt request if the Overflow Interrupt Enable bit in the Interrupt Enable Set register (INTENSET.OVF) is '1'.
Writing a '0' to this bit has no effect.
Writing a '1' to this bit clears the Overflow interrupt flag.

42.7.8 Status

Name: STATUS
Offset: 0x0C
Reset: 0x0040
Property: Read-Synchronized, Write-Synchronized

Note: This register is write-synchronized: SYNCBUSY.STATUS must be checked to ensure the STATUS register synchronization is complete.

Bit	15	14	13	12	11	10	9	8
			CCBUFV1	CCBUFV0			FILTERBUFV	PRESCBUFV
Access			R	R			R	R
Reset			0	0			0	0

Bit	7	6	5	4	3	2	1	0
	DIR	STOP	HERR	WINERR		MPERR	IDXERR	QERR
Access	R	R	RW	RW		RW	RW	RW
Reset	0	1	0	0		0	0	0

Bits 12, 13 – CCBUFVx Compare Channel x Buffer Valid [x = 1..0]
The bit is set when a new value is written to the corresponding CCBUF register.
The bit is cleared by writing a '1' to the corresponding location or automatically cleared on an UPDATE condition.

Bit 9 – FILTERBUFV Filter Buffer Valid
This bit is set when a new value is written to the PRESCALERBUF register.
The bit is cleared by writing a '1' to the corresponding location or automatically cleared on an UPDATE condition.
This bit is always read '0' when COUNTER operation mode is selected.

Bit 8 – PRESCBUFV Prescaler Buffer Valid
This bit is set when a new value is written to the PRESC register.
The bit is cleared by writing a '1' to the corresponding location or automatically cleared on an UPDATE condition.

Bit 7 – DIR Direction Status Flag
This bit reflects the HALL/QDEC direction.
in COUNTER mode, this bits is always read '0'.

Value	Description
0	Clockwise direction.
1	Counter-clockwise direction.

Bit 6 – STOP Stop
This bit reflects the HALL/QDEC decoding status.
In COUNTER mode, this bits is always read '0'.

Value	Description
0	PDEC/HALL decoding is running.
1	PDEC/HALL decoding is stopped.

Bit 5 – HERR Hall Error Flag
This flag is set when an invalid HALL code is detected.
The flag is cleared by writing a '1' to this bit location.
Outside of HALL mode, this bits is always read '0'.

Bit 4 – WINERR Window Error Flag
This flag is set when the counter is outside the window monitor.
The flag is cleared by writing a '1' to this bit location.
Outside of HALL mode, this bits is always read '0'.

Bit 2 – MPERR Missing Pulse Error flag
This flag is set when a missing pulse error condition is detected.
The flag is cleared by writing a '1' to this bit location.
Outside of QDEC mode, this bits is always read '0'.

Bit 1 – IDXERR Index Error Flag
This flag is set when an index error condition is detected.
The flag is cleared by writing a '1' to this bit location.
Outside of QDEC mode, this bits is always read '0'.

Bit 0 – QERR Quadrature Error Flag
This flag is set when an invalid QDEC transition is detected.
The flag is cleared by writing a '1' to this bit location.
Outside of QDEC mode, this bits is always read '0'.

42.7.9 Debug Control

Name: DBGCTRL
Offset: 0x0F
Reset: 0x00
Property: PAC Write-Protection

Bit	7	6	5	4	3	2	1	0
								DBGRUN
Access								RW
Reset								0

Bit 0 – DBGRUN Debug Run Mode
This bit is not affected by software reset and should not be changed by software while the PDEC module is enabled.

Value	Description
0	The PDEC module is halted when the device is halted in debug mode.
1	The PDEC module continues normal operation when the device is halted in debug mode.

42.7.10 Synchronization Status

Name: SYNCBUSY
Offset: 0x10
Reset: 0x00000000
Property: Read-Only

Bit	31	30	29	28	27	26	25	24
Access								
Reset								

Bit	23	22	21	20	19	18	17	16
Access								
Reset								

Bit	15	14	13	12	11	10	9	8
								CC1
Access								R
Reset								0

Bit	7	6	5	4	3	2	1	0
	CC0	COUNT	FILTER	PRESC	STATUS	CTRLB	ENABLE	SWRST
Access	R	R	R	R	R	R	R	R
Reset	0	0	0	0	0	0	0	0

Bits 7, 8 – CC Compare Channel x Synchronization Busy
This bit is cleared when the synchronization of Compare Channel x (CCx) register between the clock domains is complete.
This bit is set when the synchronization of Compare Channel x (CCx) register between clock domains is started.

Bit 6 – COUNT Count Synchronization Busy
This bit is cleared when the synchronization of Count register between the clock domains is complete.
This bit is set when the synchronization of Count register between clock domains is started.

Bit 5 – FILTER Filter Synchronization Busy
This bit is cleared when the synchronization of Filter register between the clock domains is complete.
This bit is set when the synchronization of Filter register between clock domains is started.
This bit is always read '0' when COUNTER operation mode is selected.

Bit 4 – PRESC Prescaler Synchronization Busy
This bit is cleared when the synchronization of Prescaler register between the clock domains is complete.
This bit is set when the synchronization of Prescaler register between clock domains is started.

Bit 3 – STATUS Status Synchronization Busy
This bit is cleared when the synchronization of Status register between the clock domains is complete.
This bit is set when the synchronization of Status register between clock domains is started.

Bit 2 – CTRLB Control B Synchronization Busy
This bit is cleared when the synchronization of Control B register between the clock domains is complete.
This bit is set when the synchronization of Control B register between clock domains is started.

Bit 1 – ENABLE Enable Synchronization Busy
This bit is cleared when the synchronization of Enable register bit between the clock domains is complete.
This bit is set when the synchronization of Enable register bit between clock domains is started.

Bit 0 – SWRST Software Reset Synchronization Busy
This bit is cleared when the synchronization of Software Reset register bit between the clock domains is complete.
This bit is set when the synchronization of Software Reset register bit between clock domains is started.

42.7.11 Prescaler Value

Name: PRESC
Offset: 0x14
Reset: 0x00
Property: Write-Synchronized

Note: This register is write-synchronized: SYNCBUSY.PRESC must be checked to ensure the PRESC register synchronization is complete.

Bit	7	6	5	4	3	2	1	0
					PRESC[3:0]			
Access					RW	RW	RW	RW
Reset					0	0	0	0

Bits 3:0 – PRESC[3:0] Prescaler Value
These bits select the GCLK prescaler factor.

Value	Name	Description
0	DIV1	No division
1	DIV2	Divide by 2
2	DIV4	Divide by 4
3	DIV8	Divide by 8
4	DIV16	Divide by 16
5	DIV32	Divide by 32
6	DIV64	Divide by 64
7	DIV128	Divide by 128
8	DIV256	Divide by 256
9	DIV512	Divide by 512
10	DIV1024	Divide by 1024

42.7.12 Filter Value

Name: FILTER
Offset: 0x15
Reset: 0x00
Property: Write-Synchronized

Note: This register is write-synchronized: SYNCBUSY.FILTER must be checked to ensure the FILTER register synchronization is complete.

Bit	7	6	5	4	3	2	1	0
	FILTER[7:0]							
Access	RW	RW	RW	RW	RW	RW	RW	RW
Reset	0	0	0	0	0	0	0	0

Bits 7:0 – FILTER[7:0] Filter Value
These bits select the PDEC inputs filter length.
These bits have no effect when COUNTER operation mode is selected.

42.7.13 Prescaler Buffer Value

Name: PRESCBUF
Offset: 0x18
Reset: 0x00
Property: Write-Synchronized

Note: This register is write-synchronized: SYNCBUSY.PRESC must be checked to ensure the PRESC register synchronization is complete.

Bit	7	6	5	4	3	2	1	0
					PRESCBUF[3:0]			
Access					RW	RW	RW	RW
Reset					0	0	0	0

Bits 3:0 – PRESCBUF[3:0] Prescaler Buffer Value
These bits hold the value of the prescaler buffer register. The value is copied in the corresponding PRESC register on UPDATE condition.

Value	Name	Description
0	DIV1	No division
1	DIV2	Divide by 2
2	DIV4	Divide by 4
3	DIV8	Divide by 8
4	DIV16	Divide by 16
5	DIV32	Divide by 32
6	DIV64	Divide by 64
7	DIV128	Divide by 128
8	DIV256	Divide by 256
9	DIV512	Divide by 512
10	DIV1024	Divide by 1024

42.7.14 Filter Buffer Value

Name: FILTERBUF
Offset: 0x19
Reset: 0x00
Property: Write-Synchronized

Note: This register is write-synchronized: SYNCBUSY.FILTER must be checked to ensure the FILTERBUF register synchronization is complete.

Bit	7	6	5	4	3	2	1	0
	FILTERBUF[7:0]							
Access	RW	RW	RW	RW	RW	RW	RW	RW
Reset	0	0	0	0	0	0	0	0

Bits 7:0 – FILTERBUF[7:0] Filter Buffer Value
These bits hold the value of the filter buffer register. The value is copied in the corresponding FILTER register on UPDATE condition.
These bits have no effect when COUNTER operation mode is selected.

42.7.15 Counter Value

Name: COUNT
Offset: 0x1C
Reset: 0x00000000
Property: PAC Write-Protection, Read-Synchronized, Write-Synchronized

Note: This register is write-synchronized: SYNCBUSY.COUNT must be checked to ensure the COUNT register synchronization is complete.

Bit	31	30	29	28	27	26	25	24
Access								
Reset								

Bit	23	22	21	20	19	18	17	16
Access								
Reset								

Bit	15	14	13	12	11	10	9	8
	COUNT[15:8]							
Access	RW	RW	RW	RW	RW	RW	RW	RW
Reset	0	0	0	0	0	0	0	0

Bit	7	6	5	4	3	2	1	0
	COUNT[7:0]							
Access	RW	RW	RW	RW	RW	RW	RW	RW
Reset	0	0	0	0	0	0	0	0

Bits 15:0 – COUNT[15:0] Counter Value
These bits contain the counter value. To read the most updated counter value, the READSYNC software command must be applied first (CTRLBSET.CMD = READSYNC).

42.7.16 Channel x Compare Value

Name: CCx
Offset: 0x20 + x*0x04 [x=0..1]
Reset: 0x00000000
Property: Read-Synchronized, Write-Synchronized

Note: This register is write-synchronized: SYNCBUSY.CCx must be checked to ensure the CCx register synchronization is complete.

Bit	31	30	29	28	27	26	25	24
Access								
Reset								

Bit	23	22	21	20	19	18	17	16
Access								
Reset								

Bit	15	14	13	12	11	10	9	8
	CC[15:8]							
Access	RW	RW	RW	RW	RW	RW	RW	RW
Reset	0	0	0	0	0	0	0	0

Bit	7	6	5	4	3	2	1	0
	CC[7:0]							
Access	RW	RW	RW	RW	RW	RW	RW	RW
Reset	0	0	0	0	0	0	0	0

Bits 15:0 – CC[15:0] Channel Compare Value
These bits hold value of the channel x compare register.

42.7.17 Channel x Compare Buffer Value

Name: CCBUFx
Offset: 0x30 + x*0x04 [x=0..1]
Reset: 0x00000000
Property: Write-Synchronized

Note: This register is write-synchronized: SYNCBUSY.CCx must be checked to ensure the CCBUFx register synchronization is complete.

Bit	31	30	29	28	27	26	25	24
Access								
Reset								

Bit	23	22	21	20	19	18	17	16
Access								
Reset								

Bit	15	14	13	12	11	10	9	8
	CCBUF[15:8]							
Access	RW	RW	RW	RW	RW	RW	RW	RW
Reset	0	0	0	0	0	0	0	0

Bit	7	6	5	4	3	2	1	0
	CCBUF[7:0]							
Access	RW	RW	RW	RW	RW	RW	RW	RW
Reset	0	0	0	0	0	0	0	0

Bits 15:0 – CCBUF[15:0] Channel Compare Buffer Value
These bits hold the value of the channel x compare buffer register. The register is used as buffer for the associated compare register (CCx). Accessing this register using the CPU will affect the corresponding CCBVx status bit (STATUS.CCBUFVx).

43. Electrical Characteristics

Absolute maximum ratings for are listed below. Exposure to these maximum rating conditions for extended periods may affect device reliability. Functional operation of the device at these or any other conditions, above the parameters indicated in the operation listings of this specification, is not implied.

Table 43-1. Absolute Maximum Ratings (1)

Ambient temperature under bias	-40°C to +85°C
Storage temperature	-60°C to +150°C
Voltage on VDD with respect to GND	-0.0V to +6.1V
Voltage on VDDIO with respect to GND	-0.6V to +6.1V
Voltage on any pin with respect to GND	-0.6V to (VDD/VDDIO+0.6V)
Voltage on VREFA with respect to VDDANA	VDDANA-0.6V
Voltage on VREFB with respect to VDDANA	VDDANA-0.6V
Maximum total current out of all GND pin(s)	129 mA
Maximum total current into all VDDIN, VDDANA, and VDDIOx pin(s) (Note2)	129 mA
Maximum output current sourced/sunk by any Low Current Mode I/O pin	10 mA
Maximum output current sourced/sunk by any High Current Mode I/O pin	20 mA
Maximum current sunk by all ports	129 mA
Maximum current sourced by all ports (Note 2)	129 mA
Maximum Junction Temperature	+105°C
Human Body Model (HBM) per JESD22-A114	2000 V
Charged Device Model (CDM) (ANSI/ESD STM 5.3.1) (All pins / Corner pins)	500 V / 750 V

Notes:

1. Stresses above those listed under “Absolute Maximum Ratings” may cause permanent damage to the device. This is a stress rating only and functional operation of the device at those or any other conditions, above those indicated in the operation listings of this specification, is not implied. Exposure to maximum rating conditions for extended periods may affect device reliability.
2. Maximum allowable current is a function of device maximum power dissipation.

43.1 Operating Frequencies and Thermal Limitations

Table 43-2. Operating Frequency vs. Voltage

Param. No.	VDDIO, VDDIN, VDDANA Range	Temp. Range (in °C)	Max CPU Frequency	Comments
DC_5	2.7 to 5.5V(1,2,3)	-40°C to +85°C	48 Mhz	Industrial

Notes:

1. With BODVDD disabled.
2. The same voltage must be applied to VDDIN and VDDANA. This common voltage is referred to as VDD in the data sheet. VDDIO should be lower or equal to VDD = VDDIN = VDDANA.
3. Some I/Os are in the VDDIO cluster, but can be multiplexed as analog functions (inputs or outputs). In such a case, VDDANA is used to power the I/O. Using this configuration may result in an electrical conflict if the VDDIO voltage is lower than VDD = VDDIN = VDDANA.

Table 43-3. Thermal Operating Conditions

Rating	Symbol	Min.	Typ.	Max.	Unit
Operating Ambient Temperature Range	TA	-40	—	85	°C
Operating Junction Temperature Range	TJ	—	—	(1)	°C
Power Dissipation: Internal Chip Power Dissipation: PINT = VDD x (IDD –∑ IOH) I/O Pin Power Dissipation: PI/O = ∑ (({VDD – VOH} x IOH) + ∑ (VOL x IOL))	PD	PINT + PI/O			W
Maximum Allowed Power Dissipation	PDMAX	(TJ – TA)/θJA			W

Note:

1. See Absolute Maximum Ratings.

Table 43-4. Thermal Packaging Characteristics

Characteristics	Symbol	Typ.	Max.	Unit	Comments
Thermal Resistance, 32-pin TQFP (7x7x1 mm) Package	θJA	63.1	—	°C/W	Note (1)
Thermal Resistance, 48-pin TQFP (7x7x1 mm) Package	θJA	62.7	—	°C/W	
Thermal Resistance, 32-pin VQFN (5x5x0.9 mm) Package	θJA	40.5	—	°C/W	
Thermal Resistance, 48-pin VQFN (7x7x0.9 mm) Package	θJA	30.9	—	°C/W	

Note:

1. Junction to ambient thermal resistance, Theta-JA (θJA) numbers are achieved by package simulations.

43.2 Power Supply

Table 43-5. Power Supply Electrical Specifications

DC CHARACTERISTICS			Standard Operating Conditions: VDD and VDDIO 2.7V to 5.5V (unless otherwise stated) Operating temperature: -40°C ≤ TA ≤ +85°C for Industrial				
Param. No.	Symbol	Characteristics	Min.	Typical	Max.	Units	Conditions
REG_1	VDDCORE_CIN	VDDCORE Input Bypass parallel Capacitor pair	0.8	1	1.2	µF	Bulk Ceramic or solid Tantalum with ESR <0.5Ω (Immediately adjacent to pin)
REG_3			80	100	—	nF	Ceramic XR7 with ESR <0.5Ω (Immediately adjacent to pin)
REG_4	VDDIO_CIN	VDDIO Input Bypass parallel Capacitor pair	8	10(5)	—	µF	Bulk Ceramic or solid Tantalum with ESR <0.5Ω (1)
REG_5			80	100	—	nF	Ceramic XR7 with ESR <0.5Ω (Immediately adjacent to all VDDIO pins)

.....continued

DC CHARACTERISTICS			Standard Operating Conditions: VDD and VDDIO 2.7V to 5.5V (unless otherwise stated) Operating temperature: -40°C ≤ TA ≤ +85°C for Industrial				
Param. No.	Symbol	Characteristics	Min.	Typical	Max.	Units	Conditions
REG_7	VDDIN_CIN	VDDIN Input Bypass parallel Capacitor pair	8	10(6)	—	µF	Bulk Ceramic or solid Tantalum with ESR <0.5Ω (1)
REG_8			80	100	—	nF	Ceramic XR7 with ESR <0.5Ω (Immediately adjacent to all VDDIN pins)
REG_9a	VREFA_CIN	External VREFA Input Bypass parallel Capacitor pair (7)	3.76	4.7	—	µF	Bulk Ceramic or solid Tantalum with ESR <0.5Ω
REG_11a			80	100	—	nF	Ceramic XR7 with ESR <0.5Ω (Immediately adjacent to pin)
REG_9b	VREFB_CIN	External VREFB Input Bypass parallel Capacitor pair (7)	3.76	4.7		µF	Bulk Ceramic or solid Tantalum with ESR <0.5Ω
REG_11b			80	100	—	nF	Ceramic XR7 with ESR <0.5Ω (Immediately adjacent to pin)
REG_17	VDDANA_CIN	VDDANA Input Bypass parallel Capacitor pair	8	10	—	µF	Bulk Ceramic or solid Tantalum with ESR <0.5Ω (1) (as close as possible to pin)
REG_19			80	100	—	nf	Ceramic XR7 with ESR <0.5Ω (Immediately adjacent to pin)
REG_23	VDDANA_LEXT	VDDANA series Ferrite Bead DCR (DC Resistance)	—	—	0.1	Ω	≥600 Ohms @ 100MHz
REG_25		Ferrite Bead current rating	500	—	—	mA	
REG_37	VDDIO, VDDIN, VDDANA (2)	VDDIO, VDDIN, VDDANA Input Voltage Range	2.7	—	5.5	V	—
REG_39	VDDCORE	DC calibrated output voltage	—	1.23	—	V	—
REG_43	SVDDIO/VDD_R	VDDIN, VDDANA, VDDIO Rise Ramp Rate to Ensure Internal Power-on Reset Signal	—	—	0.1	V/µs	Failure to meet this specification may lead to start-up or unexpected behaviors
REG_44	SVDDIO/VDD_F	VDDIO Falling Ramp Rate to Ensure Internal Power-on Reset Signal	—	—	0.05	V/µs	Failure to meet this specification may cause the device to not detect reset
REG_45A	VPOR+	VDDIO/VDD Rising Power-on Reset	2.49	—	2.58	V	VDDIO Power up/Down (See Param REG_43, VDDIO/VDD Ramp Rate)
REG_45B	VPOR-	VDDIO/VDD Falling Power-on Reset	1.64	—	1.92	V	VDDIO Power up/Down (See Param REG_43, VDDIO/VDD Ramp Rate)

.....continued

DC CHARACTERISTICS			Standard Operating Conditions: VDD and VDDIO 2.7V to 5.5V (unless otherwise stated) Operating temperature: -40°C ≤ TA ≤ +85°C for Industrial				
Param. No.	**Symbol**	**Characteristics**	**Min.**	**Typical**	**Max.**	**Units**	**Conditions**
REG_47	VBODVDD (3)	VDDIO BOD (All modes)	2.74	2.80	2.86	V	(Default Setting) LEVEL[5:0] = 0x8 (3) HYST[0]= 0x0
			2.74	2.86	2.94	V	(Default Setting) LEVEL[5:0] = 0x8 (3,4) HYST[0] = 0x1
			5.27	5.41	5.48	V	LEVEL[5:0] = 0x3F (3) HYST[0]= 0x0
			5.27	5.50	5.57	V	LEVEL[5:0] = 0x3F (3,4) HYST[0]= 0x1
REG_51	VBODVDDLEVEL_STEP	VBODVDD step size, LEVEL[5:0]	—	46	—	mV	
REG_52	VBODVDDHYST_STEP(4)	VBODVDD Hysterisis	—	See note (4)	—		
REG_53	TRST	External RESET valid active pulse width	1.1	—	—	µs	Minimum reset active time to guarantee CPU reset

Notes:

1. In single power supply configuration, only one bulk capacitor (REG_4 or REG_7) is enough for both VDDIN and VDDIO. In dual power supply configuration, two bulk capacitors are needed: REG_4 for VDDIO and REG_7 for VDDIN.
2. VDDIN and VDDANA must be at the same voltage level. VDDIO should be lower or equal to VDDIN/ VDDANA. The common voltage is referred to as VDD in the data sheet. Some I/O are in the VDDIO cluster, but can be multiplexed as analog inputs or outputs (e.g. TCC[n] pads). In such a case, VDDANA is used to power the I/O. Using this configuration may result in an electrical conflict if the VDDIO voltage is lower than the VDDIN/VDDANA.
3. VBODVDD-(min) = 2.372 + (BODVDD.LEVEL[5:0]) * 0.0460
4. $VBODVDD_{HYST_STEP}$ Graph:
   VBODVDD(max)@BODVDD.HYST[0] =1 = VBODVDD(max)@BODVDD.HYST[0]=0 + VBODVDDHYST_STEP

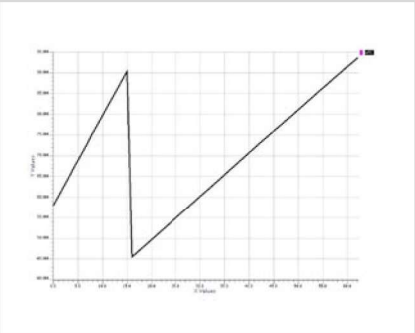

5. Shared between VDDIO, VDDIN and VDDANA in case of a common power supply VDD = VDDIO = VDDIN = VDDANA.
6. Shared between VDDIO, VDDIN and VDDANA in case of a common power supply VDD = VDDIO = VDDIN = VDDANA. Else, shared between VDDIN = VDDANA.
7. If the VREF is not used, then the caps are not needed.

43.3 CPU Active Power

Table 43-6. CPU Active Current Consumption Electrical Specifications

DC CHARACTERISTICS			Standard Operating Conditions: VDDIO=VDDANA 2.7V to 5.5V (unless otherwise stated) Operating temperature: -40°C ≤ TA ≤ +85°C for Industrial				
Param. No.	Symbol	Characteristics	VDD = VDDIO	Typ.(1)	Max.	Units	Conditions
APWR_1	IDD_ACTIVE (2,3)	CPU IDD in active mode	5.0v	99.6	112.9	µA/Mhz	Notes, 2, 3
APWR_3			3.3v	97.3	110	µA/Mhz	

Notes:

1. Typical values at 25°C only.
2. Conditions:
   - No peripheral modules are operating (i.e., all peripherals inactive)
   - All clock sources disabled except XOSC32K running with external 32kHz crystal and FDPLL96M using XOSC32K as reference and running at 48MHz
   - GCLK clock generators 1 to 8 stopped (GENCTRL[8:1].GENEN = 0)
   - AHB/APB clocks not needed are masked: AHBMASK=0x70, APB(A/B/C/D)MASK=0x0
   - CPU and AHB clocks undivided
   - All I/O pins configured as input pins pulled down or tied to GND
   - WDT, RTC, CFD Clock Fail Detect disabled
   - RESET# = VDDIO
   - CPU is running on Flash with 2 Wait States
     NVMCTRL cache enabled
   - BODVDD disabled
   - **Note:** µa/MHz varies over temperature. Worst case is given by max.
3. CPU Running CoreMark® Test Suite.

Figure 43-1. Power Consumption over Temperature in Active Mode (Typical values for guidance only, not tested in manufacturing)

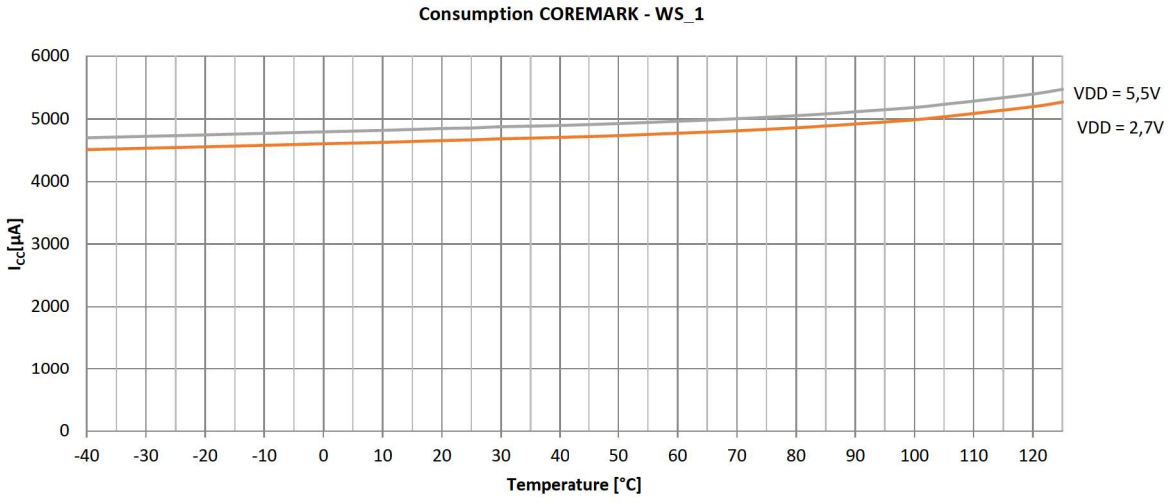

43.4 CPU Idle Power

Table 43-7. CPU Idle Current Consumption Electrical Specifications

DC CHARACTERISTICS			Standard Operating Conditions: VDD and VDDIO 2.7V to 5.5V (unless otherwise stated) Operating temperature: -40°C ≤ TA ≤ +85°C for Industrial				
Param. No.	Symbol	Characteristics	VDD = VDDIO	Typ.(1)	Max.	Units	Conditions
IPWR_13	IDD_IDLE (2)	CPU IDD in IDLE mode	5.0V	19.1	25	µA/MHz	Note 2
IPWR_15			3.3V	19	24.8	µA/MHz	

Notes:

1. Typical values at 25°C only.
2. Conditions:
   - No peripheral modules are operating (i.e., all peripherals inactive)
   - All clock sources disabled except XOSC32K running with external 32kHz crystal and FDPLL96M using XOSC32K as reference and running at 48MHz
   - GCLK clock generators 1 to 8 stopped (GENCTRL[8:1].GENEN = 0)
   - AHB/APB clocks not needed are masked: AHBMASK = 0x70, APB(A/B/C/D)MASK=0x0
   - CPU stopped and AHB clocks undivided
   - All I/O pins configured as input pins pulled down or tied to GND
   - WDT, RTC, CFD Clock Fail Detect disabled
   - RESET# = VDDIO
   - NVMCTRL cache enabled

     BODVDD disabled
   - **Note:** µa/MHz varies over temperature. Worst case is given by max.

Figure 43-2. Power Consumption at Over Temperature in IDLE Mode (typical Values for guidance only, not characterized over process / voltage)

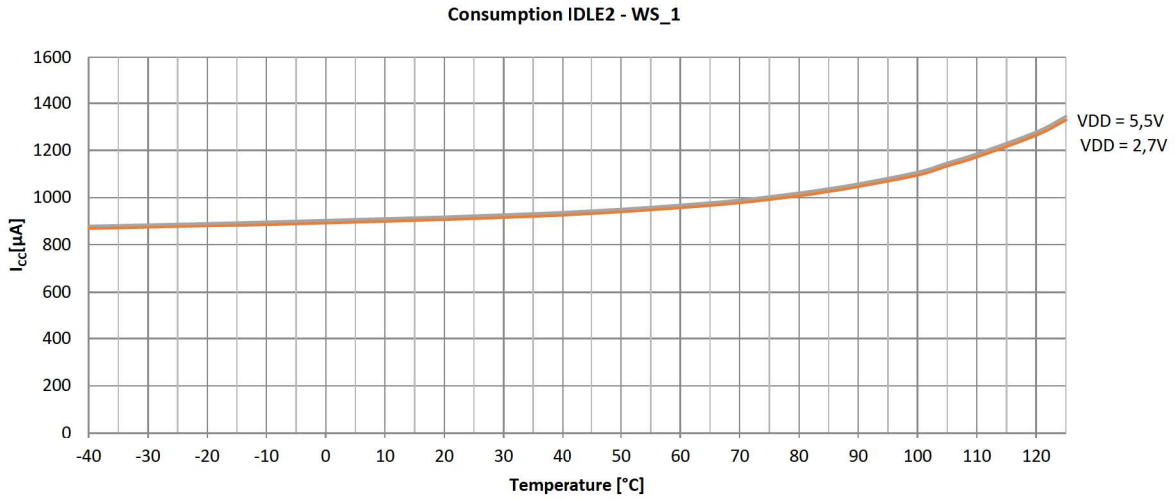

Operation Conditions

- VDD = VDDIO = 5.0V
- Cf Table xx Note 2 above

43.5 CPU Standby Power

Table 43-8. CPU Standby Current Consumption Electrical Specifications

DC CHARACTERISTICS			Standard Operating Conditions: VDD and VDDIO 2.7V to 5.5V (unless otherwise stated) Operating temperature -40°C ≤ TA ≤ +85°C for Industrial				
Param. No.	Symbol	Characteristics	VDD = VDDIO	Typ.(1)	Max.	Units	Conditions
SPWR_1	IDD_STANDBY(2)	CPU IDD in Standby mode XOSC32K running RTC running at 1 kHz	5.0V	15.1	139.3	µA	SRAM in Back Bias mode (PM.STDBYCFG.BBIASHS=0x1), Low Power regulator is used (PM.STDBYCFG.VREGSMODE=0x2)
SPWR_3			3.3V	13.7	137	µA	
SPWR_5			5.0V	309.1	433.4	µA	SRAM in Back Bias mode (PM.STDBYCFG.BBIASHS=0x1), Main Regulator used (PM.STDBYCFG.VREGSMODE=0x1)
SPWR_7			3.3V	306.1	428.7	µA	
SPWR_9			5.0V	16	163.9	µA	SRAM in No Back Bias mode (PM.STDBYCFG.BBIASHS=0x0), Low Power regulator is used (PM.STDBYCFG.VREGSMODE=0x2)
SPWR_11			3.3V	14.5	161.3	µA	
SPWR_13			5.0V	309.9	458.2	µA	SRAM in No Back Bias mode (PM.STDBYCFG.BBIASHS=0x0), Main Regulator used (PM.STDBYCFG.VREGSMODE=0x1)
SPWR_15			3.3V	306.9	453.4	µA	
SPWR_29		CPU IDD in Standby mode XOSC32K stopped RTC stopped	5.0V	13.6	136.4	µA	SRAM in Back Bias mode (PM.STDBYCFG.BBIASHS=0x1), Low Power regulator is used (PM.STDBYCFG.VREGSMODE=0x2)
SPWR_31			3.3V	12.6	134.7	µA	
SPWR_33			5.0V	307.5	429.5	µA	SRAM in Back Bias mode (PM.STDBYCFG.BBIASHS=0x1), Main Regulator is used (PM.STDBYCFG.VREGSMODE=0x1)
SPWR_35			3.3V	305	425.5	µA	
SPWR_37			5.0V	14.4	162.1	µA	SRAM in No Back Bias mode (PM.STDBYCFG.BBIASHS=0x0), Low Power regulator used (PM.STDBYCFG.VREGSMODE=0x2)
SPWR_39			3.3V	13.5	160.2	µA	
SPWR_41			5.0V	308.4	455.5	µA	SRAM in No Back Bias mode (PM.STDBYCFG.BBIASHS=0x0), Main Regulator used (PM.STDBYCFG.VREGSMODE=0x1)
SPWR_43			3.3V	305.9	451.3	µA	

.....continued

DC CHARACTERISTICS			Standard Operating Conditions: VDD and VDDIO 2.7V to 5.5V (unless otherwise stated) Operating temperature -40°C ≤ TA ≤ +85°C for Industrial				
Param. No.	Symbol	Characteristics	VDD = VDDIO	Typ.(1)	Max.	Units	Conditions

Notes:

1. Typical values at 25°C only.
2. Conditions:
   - System in standby mode
   - No SleepWalking (except RTC when indicated)
   - Peripheral modules are inactive (except RTC when indicated)
   - All clocks stopped (CPU, AHB, APB, Main, GCLK, except RTC running at 1KHz from XOSC32K when indicated)
   - All clock generation sources disabled except XOSC32K running with external 32kHz crystal when indicated
   - All I/O pins configured as input pins pulled down or tied to GND
   - WDT, CFD Clock Fail Detect disabled
   - BODVDD disabled
   - RESET# = VDDIO.

Figure 43-3. Power Consumption Over Temperature in Standby Sleep Mode with RTC

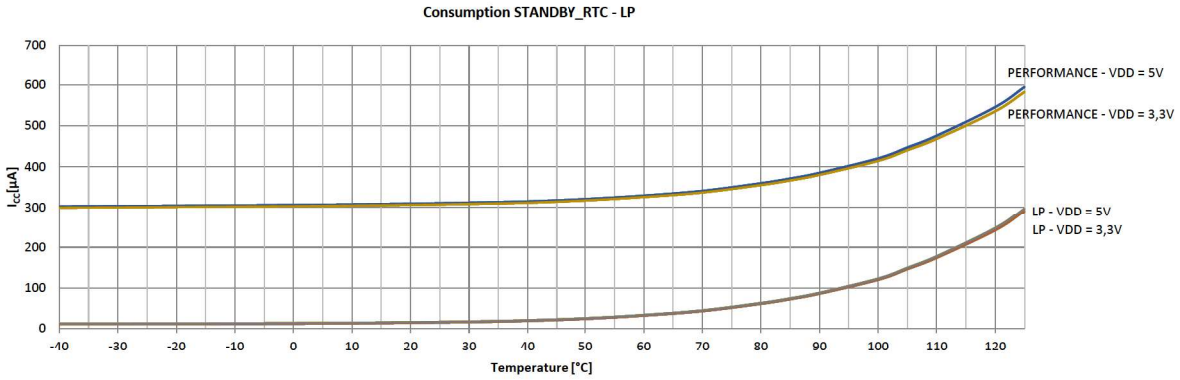

Operating Conditions:

- VDD = VDDIO = 5.0V
- Cf Table xx Note 2 above

43.6 Peripheral Active Current

Table 43-9. Peripheral Active Current Electrical Specifications(1)

DC CHARACTERISTICS			Standard Operating Conditions: VDD and VDDIO 2.7V to 5.5V (unless otherwise stated) Operating temperature: -40°C ≤ TA ≤ +85°C for Industrial		
Param. No.	Symbol	Characteristics	Max.	Units	Conditions(1)
MODULES/PERIPHERALS ACTIVE CURRENTS ≤ 100µA					
PAI_100	IRC32K	RC32K current	1.2	µA	VDDANA=VDDIO=5.0V
PAI_101	IXOSC32K	XOSC32K current	1.8	µA	VDDANA=VDDIO=5.0V
PAI_102	IEVSYS	EVSYS current	56	µA	One channel operating, Synchronous mode
PAI_103	ICCL	CCL current	63	µA	All LUT Active, Filter Enabled

.....continued

DC CHARACTERISTICS			Standard Operating Conditions: VDD and VDDIO 2.7V to 5.5V (unless otherwise stated) Operating temperature: -40°C ≤ TA ≤ +85°C for Industrial		
Param. No.	**Symbol**	**Characteristics**	**Max.**	**Units**	**Conditions(1)**
PAI_104	IBOD50	BOD50 current	81	µA	Continuous mode, VDDANA=VDDIO=5.0V
PAI_105	IWDT	WDT current	82	µA	
MODULES/PERIPHERALS ACTIVE CURRENTS ≤ 300µA					
PAI_300	IEIC	EIC/NMI current	177	µA	One EIC line operating, Filter Enabled
PAI_301	IRC48M	RC48M current	199	µA	VDDANA=VDDIO=5.0V
PAI_302	ITC4	TC current	226	µA	Normal Frequency mode, Counter in 16bits mode
PAI_303	IAC	AC current	256	µA	COMP0 and COMP1 operating in low speed, Vscaler0=Vscaler1=VDDANA
PAI_304	IPDEC	PDEC current	285	µA	Counter Mode
MODULES/PERIPHERALS ACTIVE CURRENTS ≤ 1mA					
PAI_1000	ISERCOMx	SERCOM current	307	µA	USART Mode, no communication
PAI_1001	ITCC2	TCC Current	350	µA	Normal Frequency mode
PAI_1002	ITC0/1/2/3	TC current	375	µA	Normal Frequency mode, Counter in 16bits mode
PAI_1003	IDAC	DAC current	526	µA	VREF=VDDANA, DAC DATA=0x3FF (2)
PAI_1004	ITSENS	TSENS current	615	µA	Free-Running Mode
PAI_1005	IDPLL	DPLL Current	653	µA	Fout=48MHz, VDDANA=VDDIO=5.0V
PAI_1006	IFREQM	FREQM current	720	µA	Reference running at 48MHz and Measure clock running at 96MHz (3)
PAI_1007	ISDADC	SDADC current	933	µA	Free-Running Mode
PAI_1008	IDPLL	DPLL Current	998	µA	Fout=96MHz, VDDANA=VDDIO=5.0V
MODULES/PERIPHERALS ACTIVE CURRENTS ≤ 2.6mA					
PAI_2600	ITCC0/1	TCC Current	1.53	mA	Normal Frequency mode (3)
PAI_2601	IADC	ADC current	2.09	mA	Free-Running, 1 Msps, VDDANA=VREF=5,5V (4)
PAI_2602	IDMA	DMA current	2.34	mA	RAM-to-RAM transfer, one channel operating

.....continued

DC CHARACTERISTICS			Standard Operating Conditions: VDD and VDDIO 2.7V to 5.5V (unless otherwise stated) Operating temperature: -40°C ≤ TA ≤ +85°C for Industrial		
Param. No.	Symbol	Characteristics	Max.	Units	Conditions(1)
PAI_2603	IXOSC	XOSC current	204	µA	F = 2MHz - CL=20pF XOSC.GAIN=0, AMPGC=ON, VDDANA=VDDIO=5.0V
PAI_2604			212	µA	F = 2MHz - CL=20pF XOSC.GAIN=0, AMPGC=OFF, VDDANA=VDDIO=5.0V
PAI_2605			256	µA	F = 4MHz - CL=20pF XOSC.GAIN=1, AMPGC=ON, VDDANA=VDDIO=5.0V
PAI_2606			289	µA	F = 4MHz - CL=20pF XOSC.GAIN=1, AMPGC=OFF, VDDANA=VDDIO=5.0V
PAI_2607			321	µA	F = 8MHz - CL=20pF XOSC.GAIN=2, AMPGC=ON, VDDANA=VDDIO=5.0V
PAI_2608	IXOSC	XOSC current	438	µA	F = 8MHz - CL=20pF XOSC.GAIN=2, AMPGC=OFF, VDDANA=VDDIO=5.0V
PAI_2609			681	µA	F = 16MHz - CL=20pF XOSC.GAIN=3, AMPGC=ON, VDDANA=VDDIO=5.0V
PAI_2610			873	µA	F = 16MHz - CL=20pF XOSC.GAIN=3, AMPGC=OFF, VDDANA=VDDIO=5.0V
PAI_2611			1281	µA	F = 32MHz - CL=12pF XOSC.GAIN=4, AMPGC=ON, VDDANA=VDDIO=5.0V
PAI_2612			2596	µA	F = 32MHz - CL=12pF XOSC.GAIN=4, AMPGC=OFF, VDDANA=VDDIO=5.0V

.....continued

DC CHARACTERISTICS			Standard Operating Conditions: VDD and VDDIO 2.7V to 5.5V (unless otherwise stated) Operating temperature: -40°C ≤ TA ≤ +85°C for Industrial		
Param. No.	Symbol	Characteristics	Max.	Units	Conditions(1)

Notes:

1. Conditions:
   - Only mentioned peripheral module is operating (i.e. rest of the peripherals are inactive)
   - MCLK all APB clock masked except MCLK and NVMCTRL and selected peripheral
   - MCLK.AHBMASK = 0x00005FF
   - All clock generation sources disabled unless otherwise specified. (i.e. XOSC32 = Off)
   - All clock sources disabled except XOSC32K running with external 32kHz crystal and FDPLL96M using XOSC32K as reference and running at 96MHz divided by 2 on GCLK0
   - GCLK clock generators 1 to 8 stopped (GENCTRL[8:1].GENEN = 0)
   - CPU and AHB clocks undivided
   - All I/O pins configured as input pins pulled down or tied to GND
   - WDT, RTCC, CFD Clock Fail Detect disabled
   - RESET# = VDDIO
   - CPU is running on Flash with 2 Wait States
   - NVMCTRL cache enabled
   - BODVDD disabled
   - Measure is differential between active and inactive module in those conditions
2. Conditions:
   - Same Conditions than Note 1
   - GCLK1 running on FDPLL96M at 96 MHz divided by 96
3. Conditions:
   - Same Conditions than Note 1
   - GCLK1 running on FDPLL96M at 96 MHz not divided
4. Conditions:
   - Same Conditions than Note 1
   - GCLK1 running on FDPLL96M at 96 MHz divided by 6

43.7 Wake-up Timing

Table 43-10. Wake-Up Timing from Low-Power Modes Electrical Specifications

AC CHARACTERISTICS			Standard Operating Conditions: VDD and VDDIO 2.7V to 5.5V (unless otherwise stated) Operating temperature: -40°C ≤ TA ≤ +85°C for Industrial				
Param. No.	Symbol	Characteristics	Min.	Typ	Max.	Units	Conditions
WKUP_2	WKUP_IDLE	Wake from IDLE mode (1)	—	16.8	—	µs	Note 1
WKUP_3	WKUP_STDBY	Wake from STANDBY Mode	—	35.1	—	µs	Note 1

Note:

1.
   - VDD = VDDIO = 5.0V
   - CPU clock = 8 MHz from OSC48M
   - 0 wait states
   - Flash in WAKEUPINSTANT mode (NVMCTRL.CTRLB.SLEEPRM=1)
   - Cache enabled/disabled

43.8 I/O Pin Electrical Specifications

Table 43-11. I/O Pin Electrical Specifications

DC CHARACTERISTICS			Standard Operating Conditions: VDD and VDDIO 2.7V to 5.5V (unless otherwise stated) Operating temperature: -40°C ≤ TA ≤ +85°C for Industrial				
Param. No.	Symbol	Characteristics(1)	Min.	Typical	Max.	Units	Conditions
DI_1	VIL	Input Low-Voltage I/O Pins	GND	—	0.3*VDD	V	2.7V ≤ VDD/VDDIO ≤ 5.5V
DI_3	VIH	Input High Voltage	0.7*VDD	—	VDD/VDDIO	V	
DI_5	VOL	Output voltage low (Standard pins, Low Drv Strength, DRVSTR = 0)(6)	—	—	0.2*VDD	V	2.7V ≤ VDD/VDDIO ≤ 5.5V @ IOL (2.7V ≤ VDD < 4.5V) = 2.5mA, IOL (4.5V ≤ VDD ≤ 5.5V) = 5mA
DI_6		Output voltage low (High Sink, Low Drv Strength, DRVSTR = 0) (5)					2.7V ≤ VDD/VDDIO ≤ 5.5V @ IOL (2.7V ≤ VDD < 4.5V) = 5 mA, IOL (4.5V ≤ VDD ≤ 5.5V) = 10mA
DI_7		Output voltage low (Standard pins, High Drv Strength, DRVSTR = 1)(6)					2.7V ≤ VDD/VDDIO ≤ 5.5V @ IOL (2.7V ≤ VDD < 4.5V) = 5 mA, IOL (4.5V ≤ VDD ≤ 5.5V) = 10mA
DI_8		Output voltage low (High Sink, High Drv Strength, DRVSTR = 1) (5)					2.7V ≤ VDD/VDDIO ≤ 5.5V @ IOL (2.7V ≤ VDD < 4.5V) = 10 mA, IOL (4.5V ≤ VDD ≤ 5.5V) = 20mA
DI_9	VOH	Output voltage High (Standard pins, Low Drv Strength, DRVSTR = 0)(6)	0.8*VDD	—	—	—	2.7V ≤ VDD/VDDIO ≤ 5.5V @ IOL (2.7V ≤ VDD < 4.5V) = 1.5 mA, IOL (4.5V ≤ VDD ≤ 5.5V) = 3mA
DI_10		Output voltage High (High Sink, Low Drv Strength, DRVSTR = 0) (5)					2.7V ≤ VDD/VDDIO ≤ 5.5V @ IOL (2.7V ≤ VDD < 4.5V) = 3 mA, IOL (4.5V ≤ VDD ≤ 5.5V) = 6mA
DI_11		Output voltage High (Standard pins, High Drv Strength, DRVSTR = 1)(6)					2.7V ≤ VDD/VDDIO ≤ 5.5V @ IOL (2.7V ≤ VDD < 4.5V) = 3 mA, IOL (4.5V ≤ VDD ≤ 5.5V) = 6mA
DI_12		Output voltage High (High Sink, High Drv Strength, DRVSTR = 1) (5)					2.7V ≤ VDD/VDDIO ≤ 5.5V @ IOL (2.7V ≤ VDD < 4.5V) = 6 mA, IOL (4.5V ≤ VDD ≤ 5.5V) = 12 mA
DI_13	IIL	Input pin leakage current	—	—	1	µA	GND ≤ VPIN ≤ 5.5V (VPIN = Voltage present on Pin)

.....continued

DC CHARACTERISTICS			Standard Operating Conditions: VDD and VDDIO 2.7V to 5.5V (unless otherwise stated) Operating temperature: -40°C ≤ TA ≤ +85°C for Industrial				
Param. No.	Symbol	Characteristics(1)	Min.	Typical	Max.	Units	Conditions
DI_15	RPDWN	Internal Pull-Dwn (DIR = OUT = 0, PULLEN = 1)	—	—	60	kΩ	2.7V ≤ VDD/VDDIO ≤ 5.5V
DI_17	RPUP	Internal Pull-Up (DIR= 0, OUT=PULLEN = 1)	—	—	60	kΩ	
DI_19	IICL	Input Low Injection Current	-1	—	—	mA	NOTE: 1,3,4 This parameter applies to all I/O pins.
DI_21	IICH	Input High Injection Current	—	—	1	mA	NOTE: 2,3,4 This parameter applies to all pins
DI_23	∑IICT	Total Input Injection Current (sum of all I/O and control pins) Absolute value of | ∑IICT |	—	—	45	mA	Absolute instantaneous sum of all ± input injection currents from all I/O pins. (| IICL | + | IICH |) ≤ ∑IICT
DI_25	TRISE	I/O pin Rise Time (Standard pins, Low Drv Strength, DRVSTR = 0) (6)	—	—	15	ns	VDD = VDDIO = 5V, C_{LOAD}= 20 pF (MIN)
		I/O pin Rise Time (High Sink, Low Drv Strength, DRVSTR = 0) (5)	—	—	12	ns	
		I/O pin Rise Time (Standard pins, High Drv Strength, DRVSTR = 1) (6)	—	—	8	ns	
		I/O pin Rise Time (High Sink, High Drv Strength, DRVSTR = 1) (5)	—	—	7	ns	
DI_27	TFALL	I/O pin Fall Time (Standard pins, Low Drv Strength, DRVSTR = 0) (6)	—	—	14	ns	
		I/O pin Fall Time (High Sink, Low Drv Strength, DRVSTR = 0) (5)	—	—	11	ns	
		I/O pin Fall Time (Standard pins, High Drv Strength, DRVSTR = 1) (6)	—	—	7	ns	
		I/O pin Fall Time (High Sink, High Drv Strength, DRVSTR = 1) (5)	—	—	7	ns	

.....continued

DC CHARACTERISTICS			Standard Operating Conditions: VDD and VDDIO 2.7V to 5.5V (unless otherwise stated) Operating temperature: -40°C ≤ TA ≤ +85°C for Industrial				
Param. No.	Symbol	Characteristics(1)	Min.	Typical	Max.	Units	Conditions

Notes:

1. VIL source < (GND - 0.6). Characterized but not tested.
2. 5.5V < VIH source ≤ 6.1V. Characterized but not tested.
3. If the sum of all injection currents are > | ∑IICT | it can affect the ADC results by approximately 4 to 6 counts (i.e., VIH Source > (VDDIO + 0.6) or VIL source < (GND - 0.6)).
4. Any number and/or combination of I/O pins not excluded under IICL or IICH conditions are permitted provided the "absolute instantaneous" sum of the input injection currents from all pins do not exceed the specified ∑IICT limit. To limit the injection current the user must insert a resistor in series RSERIES, (i.e. RS), between input source voltage and device pin. The resistor value is calculated according to:
   - For negative Input voltages less than (GND-0.6): RS ≥ absolute value of | ((VIL source - (GND - 0.6)) / IICL) |
   - For negative Input voltages less than (GND-0.6): RS ≥ absolute value of | ((VIL source - (GND - 0.6)) / IICL) |
   - For Vpin voltages >VDDIO +0.6 and <GND-0.6 then RS = the larger of the values calculated above.
5. The following pins are High Sink pins and have different properties than standard pins: PA10, PA11, PB10, PB11.
6. The following pins are TWIHS pins and have the same properties as standard pins when not used as SERCOM I2C pins: PA08, PA09, PA12, PA13, PA16, PA17, PA22, PA23. When used in SERCOM I2C mode, refer to I2CM_5/7 and I2CS_5/7 parameters.

43.9 Internal Voltage Reference Specifications

Table 43-12. Internal Voltage Reference Electrical Specifications

DC CHARACTERISTICS			Standard Operating Conditions: VDD and VDDIO 2.7V to 5.5V (unless otherwise stated) Operating temperature: -40°C ≤ TA ≤ +85°C for Industrial				
Param. No.	Symbol	Characteristics	Min.	Typical (1)	Max.	Units	Conditions
VR_1	IREF (2,3)	Internal Voltage Reference ADC.REFCTRL.REFSEL = INTREF DAC.CTRLB.REFSEL = INTREF SDADC.REFCTRL.REFSEL = INTREF	3.992	4.096	4.164	V	VDDANA(min) ≥ INTERNAL Voltage VREF.SEL = 3
VR_9	ACIREF(4)	Internal Voltage Reference Comparator AC.COMPCTRLn.MUXNEG = INTREF	3.992	4.096	4.164	V	VREF.SEL = 3
VR_11			1.996	2.048	2.082	V	VREF.SEL = 2
VR_13			0.998	1.024	1.041	V	VREF.SEL = 0
VR_25	TDRIFT	Internal Voltage Reference Temperature Drift	-0.019	-	0.006	%/°C	Over [-40, +25]°C
			-0.002	-	0.009	%/°C	Over [+25, +85]°C
VR_27	VDRIFT	Internal Voltage Reference Voltage Drift	-0.138	-	0.209	%/V	Over full operating voltage range

Notes:

1. Typical values at 25°C only.
2. ADC, DAC, SDADC Internal Voltage Reference voltage 2.4V ≤ IREF ≤ VDDANA.
3. ADC, DAC, SDADC reference voltages < 2.4V, (i.e. < 500µV/step), is not practical and peripheral performance is not guaranteed.
4. Comparator Ref voltage cannot exceed (VIN(max)-VIOFF(max)-200mV) ≥ CMP VREF ≥ (VIN(min)+VIOFF(min)+200mV) (i.e. VIN = Parameter CMP_4, VIOFF = Parameter CMP_1).

43.10 Maximum Clock Frequencies Electrical Specifications

Table 43-13. Maximum Clock Frequencies Electrical Specifications

AC CHARACTERISTICS		Standard Operating Conditions: VDD and VDDIO 2.7V to 5.5V (unless otherwise stated) Operating temperature: -40°C ≤ TA ≤ +85°C for Industrial		
Param. No.	Symbol	Characteristics	Max	Units
FCLK_1	f_{CPU}	CPU clock freq	48	MHz
FCLK_3	f_{AHB}	AHB clock freq	48	MHz
FCLK_5	f_{APBn}	APBA, APBB, APBC clock freq	48	MHz
FCLK_7	f_{GCLK_DPLLx}	FDPLL96M reference clock freq	2	MHz
FCLK_9	$f_{GCLK_DPLLx_32K}$	FDPLL96M 32k reference clock freq	32	kHz
FCLK_11	f_{GCLK_EIC}	EIC input clock freq	48	MHz
FCLK_13	$f_{GCLK_FREQM_MSR}$	FREQM Measure	96	MHz
FCLK_15	$f_{GCLK_FREQM_REF}$	FREQM Reference	48	MHz
FCLK_17	$f_{GCLK_EVSYS_CHANNELx}$	EVSYS channel x input clock freq	48	MHz
FCLK_19	$f_{GCLK_SERCOMx_SLOW}$	Common SERCOM slow input clock freq	5	MHz
FCLK_21	$f_{GCLK_SERCOMx_CORE}$	SERCOMx input clock freq	48	MHz
FCLK_23	$f_{GCLK_TCC0/1}$	TCC0/1 input clock freq	96	MHz
FCLK_25	f_{GCLK_TCC2}	TCC2 input clock freq	48	MHz
FCLK_27	f_{GCLK_TCx}	TCx input clock freq	48	MHz
FCLK_29	f_{GCLK_PDEC}	PDEC input clock freq	96	MHz
FCLK_31	f_{GCLK_CCL}	CCL input clock freq	48	MHz
FCLK_33	$f_{GCLK_GCLKINx}$	External GCLKx input clock freq	48	MHz
FCLK_35	f_{GCLK_AC}	Analog comparator peripheral module clock freq	48	MHz
FCLK_37	f_{GCLK_ADCx}	ADCx input clock freq	48	MHz
FCLK_39	f_{GCLK_SDADC}	SDADC input clock freq	48	MHz
FCLK_41	f_{GCLK_DAC}	DAC input clock freq	48	MHz

43.11 External Crystal Oscillator and Clock (XOSC) Electrical Specifications

Table 43-14. External Crystal Oscillator and Clock Electrical Specifications

AC CHARACTERISTICS			Standard Operating Conditions: VDD and VDDIO 2.7V to 5.5V (unless otherwise stated) Operating temperature -40°C ≤ TA ≤ +85°C for Industrial				
Param. No.	Symbol	Characteristics	Min.	Typical	Max.	Units	Conditions (1)
XOSC_1	FOSC_XOSC	XOSC Crystal Frequency	0.4	—	32	MHz	XOSCCTRL.XTALEN = 1 XIN, XOUT Primary Osc
XOSC_1A	TOSC	TOSC = 1/ FOSC_XOSC	31.25	—	2500	ns	See parameter XOSC_1 for FOSC_XOSC value

.....continued

AC CHARACTERISTICS			Standard Operating Conditions: VDD and VDDIO 2.7V to 5.5V (unless otherwise stated) Operating temperature -40°C ≤ TA ≤ +85°C for Industrial				
Param. No.	Symbol	Characteristics	Min.	Typical	Max.	Units	Conditions (1)
XOSC_2	XOSC_ST	XOSC Crystal Stabilisation Time(2) XOSC Crystal FOSC = 2 - 32 MHz	—	12300	—	TOSC	CL = 20pF, XOSC.GAIN = 0,1,2,3,4
XOSC_3	CXIN	XOSC XIN parasitic pin capacitance	—	6.2	—	pF	
XOSC_5	CXOUT	XOSC XOUT parasitic pin capacitance	—	3	—	pF	
XOSC_11	C_{LOAD} (3)	XOSC Crystal FOSC = 0.455 MHz	—	—	100	pF	
XOSC_13		XOSC Crystal FOSC = 2 MHz	—	—	20	pF	
XOSC_15		XOSC Crystal FOSC = 4 MHz	—	—	20	pF	
XOSC_17		XOSC Crystal FOSC = 8 MHz	—	—	20	pF	
XOSC_19		XOSC Crystal FOSC = 16 MHz	—	—	20	pF	
XOSC_20		XOSC Crystal FOSC = 32 MHz	—	—	12	pF	
XOSC_21	ESR	XOSC Crystal FOSC = 0.455 MHz	—	—	443	Ω	CL = 100 pF, XOSC.GAIN = 0
XOSC_23		XOSC Crystal FOSC = 2 MHz	—	—	383	Ω	CL = 20 pF, XOSC.GAIN = 0
XOSC_25		XOSC Crystal FOSC = 4 MHz	—	—	218	Ω	CL = 20 pF, XOSC.GAIN = 1
XOSC_27		XOSC Crystal FOSC = 8 MHz	—	—	114	Ω	CL = 20 pF, XOSC.GAIN = 2
XOSC_29		XOSC Crystal FOSC = 16 MHz	—	—	58	Ω	CL = 20 pF, XOSC.GAIN = 3
XOSC_31		XOSC Crystal FOSC = 32 MHz	—	—	62	Ω	CL = 12 pF, XOSC.GAIN = 4
XOSC_35	FOSC_XCLK	Ext Clock Oscillator Input Freq (XIN pin)	2 * FDPLL_1_min(4)	—	48000	KHz	XOSCCTRL.XTALEN = 0
XOSC_37	XCLK_DC	Ext Clock Oscillator (XIN) Duty Cycle	40	50	60	%	XOSCCTRL.XTALEN = 0
XOSC_39	XCLK_FST	Primary XIN Clock Fail Safe Time-out Period	—	4*1/ (OSC48M_1/2^CFDPRESC)	—	µs	

.....continued

AC CHARACTERISTICS			Standard Operating Conditions: VDD and VDDIO 2.7V to 5.5V (unless otherwise stated) Operating temperature -40°C ≤ TA ≤ +85°C for Industrial				
Param. No.	Symbol	Characteristics	Min.	Typical	Max.	Units	Conditions (1)

Notes:

1. 2.7V ≤ VDDIO = VADDANA ≤ 5.5V.
2. Crystal stabilization time only, not Oscillator Ready. This is for guidance only. A major component of crystal start-up time is based on the second party crystal MFG parasitics that are outside the scope of this specification.
3. CRYSTAL LOAD CAPACITOR CALCULATION GIVEN:
   - Standard PCB trace capacitance = 1.5 pf per 12.5 mm(0.5 inches) (i.e., PCB STD TRACE W = 0.175 mm, H = 36 µm, T=113 µm)
   - Xtal PCB capacitance typical therefore ~= 2.5 pF for a tight PCB xtal layout
   - For CXIN and CXOUT within 4 pF of each other, Assume CXTAL_EFF = ((CXIN+CXOUT) / 2)
     Note: Averaging CXIN and CXOUT will effect final calculated CLOAD value by less than 0.25 pF.

   EQUATION 1:

   MFG C_{LOAD} Spec = {([C_{XIN} + C1] * [C_{XOUT} + C2]) / [C_{XIN} + C1 + C2 + C_{XOUT}] } + estimated oscillator PCB stray capacitance

   - Assuming C1 = C2 and C_{XIN} ~= C_{XOUT}, the formula can be further simplified and restated to solve for C1 and C2 by:

   EQUATION 2: (Simplified version of equation 1)

   C1 = C2 = ((2 * MFG C_{LOAD} spec) - C_{XTAL_EFF} - (2 * PCB capacitance))

   EXAMPLE ONLY:

   - XTAL Mfg C_{LOAD} Data Sheet Spec = 12 pF
   - PCB XTAL trace Capacitance = 2.5pF
   - C_{XIN} pin = 6.5 pF, C_{XOUT} pin = 4.5 pF. Therefore C_{XTAL_EFF} = ((C_{XIN}+C_{XOUT}) / 2)

   C_{XTAL_EFF} = ((6.5 + 4.5)/2) = 5.5 pF

   C1 = C2 = ((2 * MFG C_{LOAD} spec) - C_{XTAL_EFF} - (2 * PCB capacitance))

   C1 = C2 = (24 - 5.5 - (2 * 2.5))

   C1 = C2 = 13.5 pF (Always rounded down)

   C1 = C2 = 13 pF (i.e. for hypothectical example crystal external load capacitors)

   User C1 = C2 = 13 pF ≤ C_{LOAD}(max) spec

   Figure 43-4. XTAL

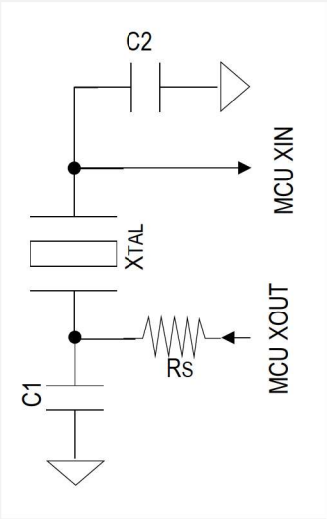

4. Minimum value to respect the FDPLL96M minimum input frequency parameter (FDPLL_1). Only applicable when XOSC is used to feed the FDPLL96M.

43.12 External 32kHz Crystal Oscillator (XOSC32K) Electrical Specifications

Table 43-15. 32.768 kHz Crystal Oscillator (XOSC32K) Electrical Specifications

AC CHARACTERISTICS			Standard Operating Conditions: VDD and VDDIO 2.7V to 5.5V (unless otherwise stated) Operating temperature -40°C ≤ TA ≤ +85°C for Industrial				
Param. No.	Symbol	Characteristics	Min.	Typical	Max.	Units	Conditions (1)
XOSC32_1	FOSC_XOSC32	XOSC32 Oscillator Crystal Frequency	—	32.768	—	kHz	XIN32, XOUT32 Secondary Osc
XOSC32_3	CXIN32	XOSC32 XIN32 parasitic pin capacitance	—	3	—	pF	
XOSC32_5	CXOUT32	XOSC32 XOUT32 parasitic pin capacitance	—	3.1	—	pF	
XOSC32_11	C_{LOAD_X32} (2)	32.768kz Crystal Load Capacitance	—	—	12.5	pF	XOSC32K.XTALEN = 1 XOSC32K.ENABLE = 1
XOSC32_13	ESR_X32	32.768kz Crystal ESR	—	—	70	kΩ	XOSC32K.XTALEN = 1 XOSC32K.ENABLE = 1 CLOAD = 12.5 pF
XOSC32_15	TOSC32	TOSC32 = 1/ FOSC_XOSC32	—	30.5176	—	us	See parameter XOSC32_1 for FOSC_XOSC32 value
XOSC32_17	XOSC32_ST	XOSC32 Crystal Stabilization Time (3)	—	16000	—	TOSC32	32.768 kHz Crystal
XOSC32_19	FOSC_XCLK32	Ext Clock Oscillator Input Freq (XIN32 pin)(4)	32	32.768	100	kHz	XOSC32K.XTALEN = 0
XOSC32_21	XCLK32_DC	Ext Clock Oscillator Duty Cycle	40	50	60	%	XOSC32K.XTALEN = 0
XOSC32_23	XCLK32_FST	XIN32 Clock Fail Safe Time-out Period	—	4*1/(ULPRC32K_1/2^CFDPRESC)	—	ms	

.....continued

AC CHARACTERISTICS			Standard Operating Conditions: VDD and VDDIO 2.7V to 5.5V (unless otherwise stated) Operating temperature -40°C ≤ TA ≤ +85°C for Industrial				
Param. No.	Symbol	Characteristics	Min.	Typical	Max.	Units	Conditions (1)

Notes:

1. 2.7V ≤ VDDIO = VDDANA ≤ 5.5V.
2. CRYSTAL LOAD CAPACITOR CALCULATION GIVEN:
   - Standard PCB trace capacitance = 1.5 pF per 12.5 mm(0.5 inches) (i.e. PCB STD TRACE W=0.175 mm, H = 36 µm, T = 113 µm)
   - Xtal PCB capacitance typical therefore ~= 2.5pF for a tight PCB xtal layout
   - For CXIN and CXOUT within 4pF of each other, Assume CXTAL_EFF = ((C_{XIN}+C_{XOUT}) / 2)
     Note: Averaging CXIN and CXOUT will effect final calculated C_{LOAD} value by less than 0.25pF.

   EQUATION 1:

   MFG C_{LOAD} Spec = {([C_{XIN} + C1] * [C_{XOUT} + C2]) / [C_{XIN} + C1 + C2 + C_{XOUT}] } + estimated oscillator PCB stray capacitance
   - Assuming C1 = C2 and C_{XIN} ~= C_{XOUT}, the formula can be further simplified and restated to solve for C1 and C2 by:

   EQUATION 2: (Simplified Equation 1)

   C1 = C2 = ((2 * MFG C_{LOAD} spec) - C_{XTAL_EFF} - (2 * PCB capacitance))

   EXAMPLE ONLY:
   - XTAL Mfg C_{LOAD} Data Sheet Spec = 12 pF
   - PCB XTAL trace Capacitance = 2.5 pF
   - C_{XIN} pin = 6.5 pF, C_{XOUT} pin = 4.5 pF. Therefore C_{XTAL_EFF} = ((C_{XIN}+C_{XOUT}) / 2)

   C_{XTAL_EFF} = ((6.5 + 4.5)/2) = 5.5 pF

   C1 = C2 = ((2 * MFG C_{LOAD} spec) - C_{XTAL_EFF} - (2 * PCB capacitance))

   C1 = C2 = (24 - 5.5 - (2 * 2.5))

   C1 = C2 = (24 - 5.5 - 5)

   C1 = C2 = 13.5 pF (Always rounded down)

   C1 = C2 = 13 pF (i.e., for hypothetical example crystal external load capacitors)

   User C1 = C2 = 13 pF ≤ C_{LOAD_X32} (max) spec

   Figure 43-5. XTAL

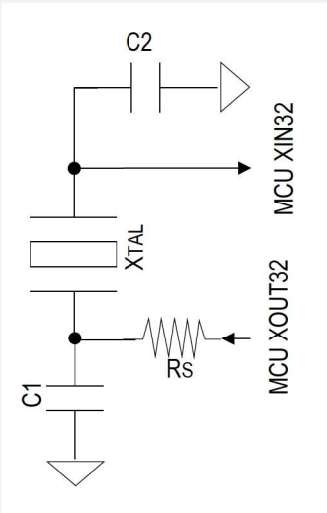

3. Crystal stabilization time only, not Oscillator Ready. This is for guidance only. A major component of crystal start-up time is based on the 2nd party crystal MFG parasitics that are outside the scope of this specification. If this is a major concern the customer would need to characterize this based on their design choices.
4. Minimum value in order to respect the FDPLL96M minimum input frequency parameter (FDPLL_1). Only applicable when XOSC32K is used to feed the FDPLL96M.

43.13 Internal 32.768 kHz RC Oscillator (OSC32K)

Table 43-16. Internal 32.768 kHz RC Oscillator (OSC32K) Electrical Specifications

AC CHARACTERISTICS			Standard Operating Conditions: VDD and VDDIO 2.7V to 5.5V (unless otherwise stated) Operating temperature -40°C ≤ TA ≤ +85°C for Industrial				
Param. No.	Symbol	Characteristics	Min.	Typ	Max.	Units	Conditions
OSC32K_1	FOSC_OSC32K	Output Frequency	—	32.768	—	kHz	25 °C , VDDANA = 5.0V
OSC32K_3a	OSC32K_ACC	Accuracy	-1.5	—	1.5	%	TA=25°C, VDDANA = 5.0V
OSC32K_3b			-18	—	13	%	TA=25°C, 2.7V ≤ VDDANA ≤ 5.5V
OSC32K_3c			-21	—	15	%	-40°C ≤ TA ≤ +85°C, 2.7V ≤ VDDANA ≤ 5.5V
OSC32K_9	OSC32K_Duty	Duty Cycle	—	50	—	%	25 °C , VDDANA = 5.0V

43.14 Internal 48MHz RC Oscillator (OSC48M)

Table 43-17. Internal 48MHz RC Oscillator (OSC48M) Electrical Specifications

AC CHARACTERISTICS			Standard Operating Conditions: VDD and VDDIO 2.7V to 5.5V (unless otherwise stated) Operating temperature -40°C ≤ TA ≤ +85°C for Industrial				
Param. No.	Symbol	Characteristics	Min.	Typical	Max.	Units	Conditions
OSC48M_1	FOSC48M	OSC48M Oscillator Frequency	46.7	—	48.9	MHz	0 to 85℃
			47	—	48.8		25℃ to 85℃
			46	—	49.3		-40 to 85°C
OSC48M_3	OSC48M_Duty	OSC48M Oscillator Duty Cycle	40	—	60	%	
OSC48M_5	OSC48M_ST	OSC48M Oscillator Start-up Time	—	3.9(1)	15	µs	

Note:
1. 25°C, VDD = VDDIO = 5.0V.

43.15 Ultra Low Power internal 32kHz RC Oscillator (OSCULP32K)

Table 43-18. Ultra Low Power internal 32kHz RC Oscillator (OSCULP32K) Electrical Specifications

AC CHARACTERISTICS			Standard Operating Conditions: VDD and VDDIO 2.7V to 5.5V (unless otherwise stated) Operating temperature: -40°C ≤ TA ≤ +85°C for Industrial				
Param. No.	Symbol	Characteristics	Min.	Typ	Max.	Units	Conditions
ULPRC32K_1	FOSC_ULPRC32K	Output Frequency	—	32.768	—	kHz	25 °C , VDDANA= 5.0V
ULPRC32K_3	ULPRC32K_ACC	Accuracy	-4.4	—	2.4	%	25℃ @VDDANA=5V
			-25		21	%	-40°C ≤ TA ≤ +85°C , 2.7V ≤ VDDANA ≤ 5.5V
ULPRC32K_9	ULPRC32K_Duty	Duty Cycle	—	50	—	%	25 °C , VDDANA = 5.0V

43.16 Fractional Digital Phase Locked Loop (FDPLL96M)

Table 43-19. CPU Frequency Electrical Specifications

AC CHARACTERISTICS			Standard Operating Conditions: VDD and VDDIO 2.7V to 5.5V (unless otherwise stated) Operating temperature: -40°C ≤ TA ≤ +85°C for Industrial				
Param. No.	Symbol	Characteristics	Min.	Typ	Max.	Units	Conditions
CPU_1	FCY	CPU Frequency of operation	0.032	—	48	MHz	2.7V ≤ VDD=VDDIO ≤ 5.5V
CPU_3	TCY	CPU Clock Period	1 / FCY			µs	

Table 43-20. Fractional Digital Phase Locked Loop (FDPLL96M) Electrical specifications

AC CHARACTERISTICS			Standard Operating Conditions: VDD and VDDIO 2.7V to 5.5V (unless otherwise stated) Operating temperature: -40°C ≤ TA ≤ +85°C for Industrial				
Param. No.	Symbol	Characteristics	Min.	Typ	Max.	Units	Conditions
FDPLL_1	FDPLL_FIN	FDPLL96M Input Frequency Range	32	—	2000	kHz	
FDPLL_3	FDPLL_FOUT	FDPLL96M Output Clock Frequency	48	—	96	MHz	
FDPLL_5	FDPLL_Jitter	FDPLL96M Period Jitter Pk-to-Pk (1)	1.4	—	3.6	%	VDD = VDDIO = 5.0v, f_{IN} = 32.768 kHz from XOSC32K, f_{OUT} = 48MHz PPM≤100.
			1	—	8.6	%	VDD = VDDIO = 5.0v, f_{IN} = 32.768 kHz from XOSC32K, f_{OUT} = 96MHz PPM≤100.
FDPLL_7			1.4	—	3.9	%	VDD = VDDIO = 5.0v, f_{IN} = 2 MHz from XOSC, f_{OUT} = 48MHz PPM≤100.
			1	—	6.8	%	VDD = VDDIO = 5.0v, f_{IN} = 2 MHz from XOSC, f_{OUT} = 96MHz PPM≤100.
FDPLL_11	FDPLL_SRT	FDPLL96M Start-Up / Lock Time Time (1)	—	1.1	—	ms	VDD = VDDIO = 5.0v, f_{IN} = 32.768 kHz from XOSC32K, f_{OUT} = 96MHz PPM≤100.
			—	25	—	µs	VDD = VDDIO = 5.0v, f_{IN} = 2 MHz from XOSC, f_{OUT} = 96MHz PPM≤100.

Note:
1. REFCLK for FDPLL96M is XOSC or XOSC32K.

43.17 Digital-to-Analog Converter (DAC) Electrical Specifications

Table 43-21. Digital-to-Analog Converter (DAC) Electrical Specifications

AC CHARACTERISTICS			Standard Operating Conditions: VDD and VDDIO 2.7V to 5.5V (unless otherwise stated) Operating temperature: -40°C ≤ TA ≤ +85°C for Industrial				
Param. No.	Symbol	Characteristics	Min.	Typical	Max.	Units	Conditions
DAC_1	DRES	DAC Resolution	—	—	10	Bits	—

.....continued

AC CHARACTERISTICS				Standard Operating Conditions: VDD and VDDIO 2.7V to 5.5V (unless otherwise stated) Operating temperature: -40°C ≤ TA ≤ +85°C for Industrial				
Param. No.	**Symbol**	**Characteristics**		**Min.**	**Typical**	**Max.**	**Units**	**Conditions**
DAC_3	DCLK	Internal DAC Clock Frequency (GCLK_DAC)		—	—	48	MHz	VDDANA = 2.7V
DAC_5	DSAMP	DAC Sampling Rate		—	—	350	ksps	+/-4LSB of final value for step size≤100Lsb @ C_{LOAD} & R_{LOAD} w/VDDANA=5.0V
DAC_7	VOUT	Output Voltage Range		GNDANA +0.05V	—	VDDANA-0.05V	V	Ext Pin(Buffered) VREFA=VDDANA @ C_{LOAD} & R_{LOAD}
				GNDANA +0.05V	—	VREF	V	Ext Pin(Buffered) @ C_{LOAD} & R_{LOAD} (VREFA < (VDDANA-50mv))
				GNDANA	—	VREF	V	Internal connection to another module (e.g. AC) (No buffer)
DAC_9	VREF (1,2)	DAC Reference Input Option (1,2)	VDDANA CTRLB.REFSEL = 0x1	VDDANA			V	
			VREFA pin CTRLB.REFSEL = 0x2	2.4V (1,2)	—	VDDANA - 0.6V	V	VDDANA ≥ VREF + 0.6V
			INTREF CTRLB.REFSEL = 0x0	2.4V (1,2)	VR_1	VDDANA - 0.6V	V	See parameter VR_1
DAC_11	CLOAD	DAC Out max load to meet VOUT & TSET		—	—	100	pF	—
DAC_13	RLOAD	DAC Out max load to meet VOUT & TSET		5	—	—	kΩ	—
SINGLE ENDED MODE (1,2,3)								
SDAC_19	INL(4)	Integral Non Linearity		-1.2	—	1.2	LSB	CTRLB.REFSEL = 0x1 VREF = VDDANA = 5.0V w/ C_{LOAD} & R_{LOAD}
				-1.2	—	1.2	LSB	CTRLB.REFSEL = 0x2 VDDANA = 5.0V VREF = VREFA pin = 3.0V w/ C_{LOAD} & R_{LOAD}
SDAC_21	DNL(4)	Differential Non Linearity		-1.4	—	1.4	LSB	CTRLB.REFSEL = 0x1 VREF = VDDANA = 5.0V w/ C_{LOAD} & R_{LOAD}
				-1.5	—	1.5	LSB	CTRLB.REFSEL = 0x2 VDDANA = 5.0V VREF = VREFA pin = 3.0V w/ C_{LOAD} & R_{LOAD}

.....continued

AC CHARACTERISTICS			Standard Operating Conditions: VDD and VDDIO 2.7V to 5.5V (unless otherwise stated) Operating temperature: -40°C ≤ TA ≤ +85°C for Industrial				
Param. No.	Symbol	Characteristics	Min.	Typical	Max.	Units	Conditions
SDAC_23	GERR (4)	Gain Error	-0.52	—	0.52	%FS	CTRLB.REFSEL = 0x1 DAC reference = VDDANA = 5.0V w/ C_{LOAD} & R_{LOAD}
			-0.7	—	0.7	%FS	CTRLB.REFSEL = 0x2 VDDANA = 5.0V DAC reference = VREFA pin = 3.0V w/ C_{LOAD} & R_{LOAD}
SDAC_25	EOFF (4)	Offset Error	-17	—	17	mV	CTRLB.REFSEL = 0x1 DAC reference = VDDANA = 5.0V w/ C_{LOAD} & R_{LOAD}
			-19	—	19	mV	CTRLB.REFSEL = 0x2 VDDANA = 5.0V DAC reference = VREFA pin = 3.0V w/ C_{LOAD} & R_{LOAD}

Notes:

1. DAC Internal Bandgap Reference voltage 4.096V when used.
2. DAC functional device operation with either internal or external VREF<2.4v is guaranteed, but not characterized. DAC will function, but with degraded performance. DAC accuracy is limited by users application noise/accuracy on VDDANA, GNDANA and VREF accuracy/drift.
3. 10-bit mode.
4. Over VOUT range defined by DAC_7 parameter.

43.18 Analog to Digital Converter (ADC) Electrical Specifications

Table 43-22. ADC Electrical Specifications

AC CHARACTERISTICS			Standard Operating Conditions: VDD and VDDIO 2.7V to 5.5V (unless otherwise stated) Operating temperature -40°C ≤ TA ≤ +85°C for Industrial				
Param. No.	Symbol	Characteristics	Min.	Typical	Max.	Units	Conditions
Device Supply							
ADC_1	VDDANA	ADC Module Supply	2.7V	—	5.5V	V	VDD = VDDIO
Reference Inputs							

.....continued

AC CHARACTERISTICS			Standard Operating Conditions: VDD and VDDIO 2.7V to 5.5V (unless otherwise stated) Operating temperature -40°C ≤ TA ≤ +85°C for Industrial				
Param. No.	Symbol	Characteristics	Min.	Typical	Max.	Units	Conditions
ADC_3	VREF(1)	ADC Reference Voltage	2.7 (1)	—	VDDANA	V	V_{REF} = VDDANA (REFCTRL.REFSEL = 0x5)
			2.4(1)		VDDANA - 0.6V	V	VDDANA ≥ V_{REF} + 0.6V, V_{REF} = INTREF (REFCTRL.REFSEL = 0x0), V_{REF} = VDDANA /1.6 (REFCTRL.REFSEL = 0x1), V_{REF} = VDDANA / 2 (REFCTRL.REFSEL = 0x2), V_{REF} = VREFA pin (REFCTRL.REFSEL = 0x3), V_{REF} = DAC output (REFCTRL.REFSEL = 0x4)
Analog Input Range							
ADC_7	AFS	Full-Scale Analog Input Signal Range (Single-Ended)	GNDANA	—	VREF	V	
ADC_9		Full-Scale Analog Input Signal Range (Differential)	-VREF	—	VREF	V	
ADC_10	VCMIN	Input common mode voltage	0.2	—	VREF-0.2	V	CTRLC.R2R = 1
			VREF/2 - 0.2	—	VREF/2 + 0.2	V	CTRLC.R2R = 0
ADC_11	TSETTLING	ADC Stabilization Time	—	10	—	µs	CTRLA.ENABLE=1 or CTRLA.ONDEMAND=1

Note:

1. ADC functional device operation with either internal or external VREF<2.4v is functional, but not characterized. ADC will function, but with degraded accuracy of approximately ~((0.06 * 2n) / VREF), where "n"=#bits. ADC accuracy is limited by internal VREF accuracy + drift, MCU generated noise plus users application noise/accuracy on VDDANA, GNDANA.

Table 43-23. Single Ended Mode ADC Electrical Specifications

AC CHARACTERISTICS			Standard Operating Conditions: VDD and VDDIO 2.7V to 5.5V (unless otherwise stated) Operating temperature: -40°C ≤ TA ≤ +85°C for Industrial				
Param. No.	Symbol	Characteristics	Min.	Typical	Max.	Units	Conditions
SINGLE ENDED MODE ADC Accuracy							
SADC_11	Res	Resolution	8	—	12	bits	Selectable 8, 10, 12 bit Resolution Ranges
SADC_13a	ENOB (1,2,3)	Effective Number of bits	9.4	—	—	bits	1 Msps, REFCTRL.REFSEL = 0x5 = VDDANA V_{REF} = VDDANA = 5.0V
SADC_13b			9.4	—	—	bits	1 Msps, REFCTRL.REFSEL = 0x5 = VDDANA V_{REF} = VDDANA = 3.3V
SADC_13c			9.4	—	—	bits	1 Msps, REFCTRL.REFSEL = 0x3 = VREFA pin VDDANA = 5.0V V_{REF} = VREFA = 3.0V
SADC_13d			9	—	—	bits	1 Msps, REFCTRL.REFSEL = 0x0 = INTREF VDDANA = 5.0V Internal V_{REF} = INTREF = 4.096V

.....continued

AC CHARACTERISTICS			Standard Operating Conditions: VDD and VDDIO 2.7V to 5.5V (unless otherwise stated) Operating temperature: -40°C ≤ TA ≤ +85°C for Industrial				
Param. No.	Symbol	Characteristics	Min.	Typical	Max.	Units	Conditions
SADC_19	INL (3)	Integral Nonlinearity	-4.5	—	4.5	LSb	1 Msps, REFCTRL.REFSEL = 0x5 = VDDANA V_{REF} = VDDANA = 5.0V (5)
SADC_19b			-4.2	—	4.2	LSb	1 Msps, REFCTRL.REFSEL = 0x5 = VDDANA V_{REF} = VDDANA = 3.3V (5)
SADC_19c			-4.2	—	4.2	LSb	1 Msps, REFCTRL.REFSEL = 0x3 = VREFA pin VDDANA = 5.0V V_{REF} = VREFA = 3.0V (6)
SADC_19d			-6.5	—	6.5	LSb	1 Msps, REFCTRL.REFSEL = 0x0 = INTREF VDDANA = 5.0V Internal V_{REF} = INTREF = 4.096V (6)
SADC_25a	DNL (3)	Differential Nonlinearity	-0.99	—	1.5	LSb	1 Msps, REFCTRL.REFSEL = 0x5 = VDDANA V_{REF} = VDDANA = 5.0V (5)
SADC_25b			-0.99	—	1.6	LSb	1 Msps, REFCTRL.REFSEL = 0x5 = VDDANA V_{REF} = VDDANA = 3.3V (5)
SADC_25c			-0.99	—	1.5	LSb	1 Msps, REFCTRL.REFSEL = 0x3 = VREFA pin VDDANA = 5.0V V_{REF} = VREFA = 3.0V (6)
SADC_25d			-0.99	—	2.1	LSb	1 Msps, REFCTRL.REFSEL = 0x0 = INTREF VDDANA = 5.0V Internal V_{REF} = INTREF = 4.096V (6)
SADC_31a	GERR (3)	Gain Error	-0.30	—	0.06	%	1 Msps, REFCTRL.REFSEL = 0x5 = VDDANA V_{REF} = VDDANA = 5.0V (5)
SADC_31b			-0.38	—	0.10	%	1 Msps, REFCTRL.REFSEL = 0x5 = VDDANA V_{REF} = VDDANA = 3.3V (5)
SADC_31c			-0.69	—	0.44	%	1 Msps, REFCTRL.REFSEL = 0x3 = VREFA pin VDDANA = 5.0V V_{REF} = VREFA = 3.0V(6)
SADC_31d			-3.2	—	1.6	%	1 Msps, REFCTRL.REFSEL = 0x0 = INTREF VDDANA = 5.0V Internal V_{REF} = INTREF = 4.096V (6)
SADC_37a	EOFF (3)	Offset Error	-52	—	57	mV	1 Msps, REFCTRL.REFSEL = 0x5 = VDDANA V_{REF} = VDDANA = 5.0V (5)
SADC_37b			-32	—	41	mV	1 Msps, REFCTRL.REFSEL = 0x5 = VDDANA V_{REF} = VDDANA = 3.3V (5)
SADC_37c			-30	—	39	mV	1 Msps, REFCTRL.REFSEL = 0x3 = VREFA pin VDDANA = 5.0V V_{REF} = VREFA = 3.0V (6)
SADC_37d			-39	—	51	mV	1 Msps, REFCTRL.REFSEL = 0x0 = INTREF VDDANA = 5.0V Internal V_{REF} = INTREF = 4.096V (6)
SADC_43a	TUE (3)	Total Unadjusted Error	3.5	—	27	LSb	1 Msps, REFCTRL.REFSEL = 0x5 = VDDANA V_{REF} = VDDANA = 5.0V (5)
SADC_43b			3.1	—	30	LSb	1 Msps, REFCTRL.REFSEL = 0x5 = VDDANA V_{REF} = VDDANA = 3.3V (5)
SADC_43c			2.7	—	29	LSb	1 Msps, REFCTRL.REFSEL = 0x3 = VREFA pin VDDANA = 5.0V V_{REF} = VREFA = 3.0V (6)
SADC_43d			6.9	—	91	LSb	1 Msps, REFCTRL.REFSEL = 0x0 = INTREF VDDANA = 5.0V Internal V_{REF} = INTREF = 4.096V (6)
SINGLE ENDED MODE ADC Dynamic Performance							

.....continued

AC CHARACTERISTICS			Standard Operating Conditions: VDD and VDDIO 2.7V to 5.5V (unless otherwise stated) Operating temperature: -40°C ≤ TA ≤ +85°C for Industrial				
Param. No.	Symbol	Characteristics	Min.	Typical	Max.	Units	Conditions
SADC_49a	SINAD (1,2,3)	Signal to Noise and Distortion	58	—	—	dB	1 Msps, REFCTRL.REFSEL = 0x5 = VDDANA V_{REF} = VDDANA = 5.0V
SADC_49b			58	—	—		1 Msps, REFCTRL.REFSEL = 0x5 = VDDANA V_{REF} = VDDANA = 3.3V
SADC_49c			58	—	—		1 Msps, REFCTRL.REFSEL = 0x3 = VREFA pin VDDANA = 5.0V V_{REF} = VREFA = 3.0V
SADC_49d			56	—	—		1 Msps, REFCTRL.REFSEL = 0x0 = INTREF VDDANA = 5.0V Internal V_{REF} = INTREF = 4.096V
SADC_51a	SNR (1,2,3)	Signal to Noise ratio	59	—	—		1 Msps, REFCTRL.REFSEL = 0x5 = VDDANA V_{REF} = VDDANA = 5.0V
SADC_51b			59	—	—		1 Msps, REFCTRL.REFSEL = 0x5 = VDDANA V_{REF} = VDDANA = 3.3V
SADC_51c			59	—	—		1 Msps, REFCTRL.REFSEL = 0x3 = VREFA pin VDDANA = 5.0V V_{REF} = VREFA = 3.0V
SADC_51d			55	—	—		1 Msps, REFCTRL.REFSEL = 0x0 = INTREF VDDANA = 5.0V Internal V_{REF} = INTREF = 4.096V
SADC_53a	SFDR (1,2,3)	Spurious Free Dynamic Range	64	—	—		1 Msps, REFCTRL.REFSEL = 0x5 = VDDANA V_{REF} = VDDANA = 5.0V
SADC_53b			65	—	—		1 Msps, REFCTRL.REFSEL = 0x5 = VDDANA V_{REF} = VDDANA = 3.3V
SADC_53c			64	—	—		1 Msps, REFCTRL.REFSEL = 0x3 = VREFA pin VDDANA = 5.0V V_{REF} = VREFA = 3.0V
SADC_53d			63	—	—		1 Msps, REFCTRL.REFSEL = 0x0 = INTREF VDDANA = 5.0V Internal V_{REF} = INTREF = 4.096V
SADC_55a	THD (1,2,3,4)	Total Harmonic Distortion	—	—	-63		1 Msps, REFCTRL.REFSEL = 0x5 = VDDANA V_{REF} = VDDANA = 5.0V
SADC_55b			—	—	-63		1 Msps, REFCTRL.REFSEL = 0x5 = VDDANA V_{REF} = VDDANA = 3.3V
SADC_55c			—	—	-62		1 Msps, REFCTRL.REFSEL = 0x3 = VREFA pin VDDANA = 5.0V V_{REF} = VREFA = 3.0V
SADC_55d			—	—	-63		1 Msps, REFCTRL.REFSEL = 0x0 = INTREF VDDANA = 5.0V Internal V_{REF} = INTREF = 4.096V

Notes:

1. Characterized with an analog input sine wave = (FTP(max) / 100). Example: FTP(max)=1Msps/100 = 10kHz sine wave.
2. Sinewave peak amplitude = 96% ADC Full Scale amplitude input with 12bit resolution.
3. Spec values collected under the following additional conditions:
   - 3.1. 12bit resolution mode.
   - 3.2. All registers at reset default value otherwise not mentioned.
4. Value taken over 7 harmonics.
5. SAMPCTRL.OFFCOMP=0, SAMPCTRL.SAMPLEN=[5:0]=3.
6. SAMPCTRL.OFFCOMP=0 and REFCTRL.REFCOMP=0 , SAMPCTRL.SAMPLEN=[5:0]=3.

Table 43-24. Differential Mode ADC Electrical Specifications

AC CHARACTERISTICS			Standard Operating Conditions: VDD and VDDIO 2.7V to 5.5V (unless otherwise stated) Operating temperature: -40°C ≤ TA ≤ +85°C for Industrial				
Param. No.	Symbol	Characteristics	Min.	Typical	Max.	Units	Conditions
DIFFERENTIAL MODE ADC Accuracy							
DADC_11	Res	Resolution	8	—	12	bits	Selectable 8, 10, 12 bit Resolution Ranges
DADC_13a	ENOB (1,2,3)	Effective Number of bits	10.5	—	—	bits	1 Msps, REFCTRL.REFSEL = 0x5 = VDDANA V_{REF} = VDDANA = 5.0V
DADC_13b			10.5	—	—	bits	1 Msps, REFCTRL.REFSEL = 0x5 = VDDANA V_{REF} = VDDANA = 3.3V
DADC_13c			10.4	—	—	bits	1 Msps, REFCTRL.REFSEL = 0x3 = VREFA pin VDDANA = 5.0V V_{REF} = VREFA = 3.0V
DADC_13d			9.9	—	—	bits	1 Msps, REFCTRL.REFSEL = 0x0 = INTREF VDDANA = 5.0V Internal V_{REF} = INTREF = 4.096V
DADC_19a	INL (3)	Integral Nonlinearity	-2.2	—	2.2	LSb	1 Msps, REFCTRL.REFSEL = 0x5 = VDDANA V_{REF} = VDDANA = 5.0V (5)
DADC_19b			-2.0	—	2.0	LSb	1 Msps, REFCTRL.REFSEL = 0x5 = VDDANA V_{REF} = VDDANA = 3.3V (5)
DADC_19c			-2.2	—	2.2	LSb	1 Msps, REFCTRL.REFSEL = 0x3 = VREFA pin VDDANA = 5.0V V_{REF} = VREFA = 3.0V (6)
DADC_19d			-6.0	—	6.0	LSb	1 Msps, REFCTRL.REFSEL = 0x0 = INTREF VDDANA = 5.0V Internal V_{REF} = INTREF = 4.096V (6)
DADC_25a	DNL (3)	Differential Nonlinearity	-0.99	—	1.2	LSb	1 Msps, REFCTRL.REFSEL = 0x5 = VDDANA V_{REF} = VDDANA = 5.0V (5)
DADC_25b			-0.99	—	1.3	LSb	1 Msps, REFCTRL.REFSEL = 0x5 = VDDANA V_{REF} = VDDANA = 3.3V (5)
DADC_25c			-0.99	—	1.3	LSb	1 Msps, REFCTRL.REFSEL = 0x3 = VREFA pin VDDANA = 5.0V V_{REF} = VREFA = 3.0V (6)
DADC_25d			-0.99	—	6.0	LSb	1 Msps, REFCTRL.REFSEL = 0x0 = INTREF VDDANA = 5.0V Internal V_{REF} = INTREF = 4.096V (6)
DADC_31a	GERR (3)	Gain Error	-0.04	—	0.14	%	1 Msps, REFCTRL.REFSEL = 0x5 = VDDANA V_{REF} = VDDANA = 5.0V (5)
DADC_31b			-0.10	—	0.16	%	1 Msps, REFCTRL.REFSEL = 0x5 = VDDANA V_{REF} = VDDANA = 3.3V (5)
DADC_31c			-0.03	—	0.14	%	1 Msps, REFCTRL.REFSEL = 0x3 = VREFA pin VDDANA = 5.0V V_{REF} = VREFA = 3.0V (6)
DADC_31d			-3.0	—	1.7	%	1 Msps, REFCTRL.REFSEL = 0x0 = INTREF VDDANA = 5.0V Internal V_{REF} = INTREF = 4.096V (6)

.....continued

AC CHARACTERISTICS			Standard Operating Conditions: VDD and VDDIO 2.7V to 5.5V (unless otherwise stated) Operating temperature: -40°C ≤ TA ≤ +85°C for Industrial				
Param. No.	**Symbol**	**Characteristics**	**Min.**	**Typical**	**Max.**	**Units**	**Conditions**
DADC_37a	EOFF (3)	Offset Error	-6.6	—	6.9	mV	1 Msps, REFCTRL.REFSEL = 0x5 = VDDANA V_{REF} = VDDANA = 5.0V (5)
DADC_37b			-5.1	—	6.1	mV	1 Msps, REFCTRL.REFSEL = 0x5 = VDDANA V_{REF} = VDDANA = 3.3V (5)
DADC_37c			-4.5	—	8.6	mV	1 Msps, REFCTRL.REFSEL = 0x3 = VREFA pin VDDANA = 5.0V V_{REF} = VREFA = 3.0V (6)
DADC_37d			-5.0	—	6.7	mV	1 Msps, REFCTRL.REFSEL = 0x0 = INTREF VDDANA = 5.0V Internal V_{REF} = INTREF = 4.096V (6)
DADC_43a	TUE (3)	Total Unadjusted Error	1.7	—	5.0	LSb	1 Msps, REFCTRL.REFSEL = 0x5 = VDDANA V_{REF} = VDDANA = 5.0V (5)
DADC_43b			1.5	—	4.5	LSb	1 Msps, REFCTRL.REFSEL = 0x5 = VDDANA V_{REF} = VDDANA = 3.3V (5)
DADC_43c			2.1	—	6.4	LSb	1 Msps, REFCTRL.REFSEL = 0x3 = VREFA pin VDDANA = 5.0V V_{REF} = VREFA = 3.0V (6)
DADC_43d			2.4	—	41	LSb	1 Msps, REFCTRL.REFSEL = 0x0 = INTREF VDDANA = 5.0V Internal V_{REF} = INTREF = 4.096V (6)
DIFFERENTIAL MODE ADC Dynamic Performance							

.....continued

AC CHARACTERISTICS			Standard Operating Conditions: VDD and VDDIO 2.7V to 5.5V (unless otherwise stated) Operating temperature: -40°C ≤ TA ≤ +85°C for Industrial				
Param. No.	Symbol	Characteristics	Min.	Typical	Max.	Units	Conditions
DADC_49a	SINAD (1,2,3)	Signal to Noise and Distortion	64	—	—	dB	1 Msps, REFCTRL.REFSEL = 0x5 = VDDANA V_{REF} = VDDANA = 5.0V
DADC_49b			65	—	—		1 Msps, REFCTRL.REFSEL = 0x5 = VDDANA V_{REF} = VDDANA = 3.3V
DADC_49c			64	—	—		1 Msps, REFCTRL.REFSEL = 0x3 = VREFA pin VDDANA = 5.0V V_{REF} = VREFA = 3.0V
DADC_49d			61	—	—		1 Msps, REFCTRL.REFSEL = 0x0 = INTREF VDDANA = 5.0V Internal V_{REF} = INTREF = 4.096V
DADC_51a	SNR (1,2,3)	Signal to Noise ratio	65	—	—		1 Msps, REFCTRL.REFSEL = 0x5 = VDDANA V_{REF} = VDDANA = 5.0V
DADC_51b			65	—	—		1 Msps, REFCTRL.REFSEL = 0x5 = VDDANA V_{REF} = VDDANA = 3.3V
DADC_51c			65	—	—		1 Msps, REFCTRL.REFSEL = 0x3 = VREFA pin VDDANA = 5.0V V_{REF} = VREFA = 3.0V
DADC_51d			61	—	—		1 Msps, REFCTRL.REFSEL = 0x0 = INTREF VDDANA = 5.0V Internal V_{REF} = INTREF = 4.096V
DADC_53a	SFDR (1,2,3)	Spurious Free Dynamic Range	70	—	—		1 Msps, REFCTRL.REFSEL = 0x5 = VDDANA V_{REF} = VDDANA = 5.0V
DADC_53b			71	—	—		1 Msps, REFCTRL.REFSEL = 0x5 = VDDANA V_{REF} = VDDANA = 3.3V
DADC_53c			69	—	—		1 Msps, REFCTRL.REFSEL = 0x3 = VREFA pin VDDANA = 5.0V V_{REF} = VREFA = 3.0V
DADC_53d			69	—	—		1 Msps, REFCTRL.REFSEL = 0x0 = INTREF VDDANA = 5.0V Internal V_{REF} = INTREF = 4.096V
DADC_55a	THD (1,2,3,4)	Total Harmonic Distortion	—	—	-70		1 Msps, REFCTRL.REFSEL = 0x5 = VDDANA V_{REF} = VDDANA = 5.0V
DADC_55b			—	—	-70		1 Msps, REFCTRL.REFSEL = 0x5 = VDDANA V_{REF} = VDDANA = 3.3V
DADC_55c			—	—	-69		1 Msps, REFCTRL.REFSEL = 0x3 = VREFA pin VDDANA = 5.0V V_{REF} = VREFA = 3.0V
DADC_55d			—	—	-69		1 Msps, REFCTRL.REFSEL = 0x0 = INTREF VDDANA = 5.0V Internal V_{REF} = INTREF = 4.096V

Notes:

1. Characterized with an analog input sine wave = (FTP(max) / 100). Example: FTP(max)=1Msps/100 = 10Khz sine wave.
2. Sinewave peak amplitude = 96% ADC_ Full Scale amplitude input with 12bit resolution c) 12bit resolution mode.
3. Spec values collected under the following additional conditions:
   - 12bit resolution mode
   - All registers at reset default value otherwise not mentioned
4. Value taken over 7 harmonics.
5. SAMPCTRL.OFFCOMP=1.
6. SAMPCTRL.OFFCOMP=1 and REFCTRL.REFCOMP=1.

Table 43-25. ADC Conversion Timing Requirements

AC CHARACTERISTICS			Standard Operating Conditions: VDD and VDDIO 2.7V to 5.5V (unless otherwise stated) Operating temperature: -40°C ≤ TA ≤ +85°C for Industrial				
Param. No.	Symbol	Characteristics	Min.	Typical	Max.	Units	Conditions
ADC_ Clock Requirements							
ADC_57	TAD	ADC Clock Period	62.5	—	6250	ns	
ADC_58	fGCLK_ADCx	ADCx Module GCLK max input freq	—	—	48	MHz	
ADC Single-Ended Throughput Rates							
ADC_59	FTP (Single-Ended Mode)	Throughput Rate (3) (Single-Ended)	—	—	1.231	Msps	12-bit resolution, Rsource ≤298 Ω, SAMPCTRL.SAMPLEN=0 (1)
			—	—	1.333		10-bit resolution, Rsource ≤633 Ω, SAMPCTRL.SAMPLEN=0 (1)
			—	—	1.6		8-bit resolution, Rsource ≤1,103 Ω, SAMPCTRL.SAMPLEN=0 (1)
			—	—	1	Msps	12 bit resolution, Rsource ≤6,335Ω SAMPCTRL.SAMPLEN=n/a (2)
			—	—	1.067		10-bit resolution, Rsource ≤7,677 Ω SAMPCTRL.SAMPLEN=n/a (2)
			—	—	1.231		8-bit resolution, Rsource ≤9,556 Ω SAMPCTRL.SAMPLEN=n/a (2)
ADC Differential Mode Throughput Rates							
ADC_61	FTP (Differential Mode)	Throughput Rate (3) (Differential Mode)	—	—	1.231	Msps	12-bit resolution, Rsource ≤298 Ω, SAMPCTRL.SAMPLEN=0 (1)
			—	—	1.455		10-bit resolution, Rsource ≤633 Ω, SAMPCTRL.SAMPLEN=0 (1)
			—	—	1.778		8-bit resolution, Rsource ≤1,103 Ω, SAMPCTRL.SAMPLEN=0 (1)
			—	—	1	Msps	12-bit resolution, Rsource ≤6,335Ω SAMPCTRL.SAMPLEN=n/a (2)
			—	—	1.143		10-bit resolution, Rsource ≤7,677 Ω SAMPCTRL.SAMPLEN=n/a (2)
			—	—	1.333		8-bit resolution, Rsource ≤9,556 Ω SAMPCTRL.SAMPLEN=n/a (2)

Notes:

1. ADC Sample time = ((SAMPCTRL.SAMPLEN + 1) * TAD) and SAMPCTRL.OFFCOMP=0.
2. ADC HDW forces sample time to 4*TAD when SAMPCTRL.OFFCOMP=1, user SAMPCTRL.SAMPLEN is ignored.
3. ADC Throughput Rate FTP = ((1 / ((TSAMP + TCNV) * TAD)) / (# of user active analog inputs in use on specific target ADC module)).

Table 43-26. ADC Sample Timing Requirements

AC CHARACTERISTICS			Standard Operating Conditions: VDD and VDDIO 2.7V to 5.5V (unless otherwise stated) Operating temperature: -40°C ≤ TA ≤ +85°C for Industrial				
Param. No.	Symbol	Characteristics	Min.	Typical	Max.	Units	Conditions
ADC_63	TSAMP	ADC Sample Time (1,2,3)	1 (1)	—	—	TAD	12-bit resolution, TAD(min), Ext Analog Input Rsource ≤ 298 Ω
							10-bit resolution, TAD(min), Ext Analog Input Rsource ≤ 633 Ω
							8-bit resolution, TAD(min), Ext Analog Input Rsource ≤ 1,103 Ω
			2 (1)	—	—		12-bit resolution, TAD(min), Ext Analog Input Rsource ≤ 2,310 Ω
							10-bit resolution, TAD(min), Ext Analog Input Rsource ≤ 2,981 Ω
							8-bit resolution, TAD(min), Ext Analog Input Rsource ≤ 3,921 Ω
			3 (1)	—	—		12-bit resolution, TAD(min), Ext Analog Input Rsource ≤ 4,323 Ω
							10-bit resolution, TAD(min), Ext Analog Input Rsource ≤ 5,329 Ω
							8-bit resolution, TAD(min), Ext Analog Input Rsource ≤ 6,738 Ω
			4 (1,2)	—	—		12-bit resolution, TAD(min), Ext Analog Input Rsource ≤ 6,335 Ω
							10-bit resolution, TAD(min), Ext Analog Input Rsource ≤ 7,678 Ω
							8-bit resolution, TAD(min), Ext Analog Input Rsource ≤ 9,556 Ω
			5 (1)	—	—		12-bit resolution, TAD(min), Ext Analog Input Rsource ≤ 8,348 Ω
							10-bit resolution, TAD(min), Ext Analog Input Rsource ≤ 10,026 Ω
							8-bit resolution, TAD(min), Ext Analog Input Rsource ≤ 12,374 Ω
			6 (1)	—	—		12-bit resolution, TAD(min), Ext Analog Input Rsource ≤ 10,361 Ω
							10-bit resolution, TAD(min), Ext Analog Input Rsource ≤ 12,374 Ω
							8-bit resolution, TAD(min), Ext Analog Input Rsource ≤ 15,192 Ω
			3000	—	—	ns	With DAC as input

.....continued

AC CHARACTERISTICS			Standard Operating Conditions: VDD and VDDIO 2.7V to 5.5V (unless otherwise stated) Operating temperature: -40°C ≤ TA ≤ +85°C for Industrial				
Param. No.	Symbol	Characteristics	Min.	Typical	Max.	Units	Conditions
ADC_65	TCNV	Conversion Time (3) (Single-Ended Mode)		12		TAD	12-bit resolution
				11			10-bit resolution
				9			8-bit resolution
ADC_67		Conversion Time (3) (Differential Mode)		12		TAD	12-bit resolution
				10			10-bit resolution
				8			8-bit resolution
ADC_69	CSAMPLE	ADC Internal Sample Cap	—	—	3.2	pF	
ADC_71	RSAMPLE	ADC Internal impedance	—	—	1715	Ω	

Notes:

1. When SAMPCTRL.OFFCOMP = 0:
   - TSAMP = (((RSAMPLE + RSOURCE) * CSAMPLE * ((#Bits Resolution+2) * ln(2)))) / TAD)+1 rounded down to nearest whole integer
   - User SAMPCTRL.SAMPLEN = (TSAMP - 1)
2. When SAMPCTRL.OFFCOMP=1:
   - TSAMP = 4 (Forced by HDW)
   - User SAMPCTRL.SAMPLEN = (n/a, Ignored by HDW)
3. ADC Throughput Rate FTP = ((1 / ((TSAMP + TCNV) * TAD)) / (# of user active analog inputs in use on specific target ADC module)).

43.19 Sigma-Delta Analog to Digital Converter (SDADC) Electrical Specifications

Table 43-27. SDADC Electrical Specifications

AC CHARACTERISTICS			Standard Operating Conditions: VDD and VDDIO 2.7V to 5.5V (unless otherwise stated) Operating temperature: -40°C ≤ TA ≤ +85°C for Industrial				
Param. No.	Symbol	Characteristics	Min.	Typical	Max.	Units	Conditions
Device Supply							
SDADC_1	VDDANA	ADC Module Supply	2.7V	—	5.5V	V	VDD = VDDIO
Reference Inputs							
SDADC_3	VREF(2)	ADC Reference Voltage	2.7	—	VDDANA	V	V_{REF} = VDDANA (REFCTRL.REFSEL = 0x3)
			2.4		VDDANA	V	V_{REF} ≤ VDDANA V_{REF} = INTREF (REFCTRL.REFSEL = 0x0) V_{REF} = VREFB pin (REFCTRL.REFSEL = 0x1) V_{REF} = DAC output (REFCTRL.REFSEL = 0x2)
Analog Input Range							

.....continued

AC CHARACTERISTICS			Standard Operating Conditions: VDD and VDDIO 2.7V to 5.5V (unless otherwise stated) Operating temperature: -40°C ≤ TA ≤ +85°C for Industrial				
Param. No.	Symbol	Characteristics	Min.	Typical	Max.	Units	Conditions
SDADC_7	AFS	Full-Scale Analog Input Signal Range (Single-Ended (1))	GNDANA	—	+VREF	V	V_{REF}<VDDANA-0.3V, Gaincorr = 0x1
SDADC_8			GNDANA	—	+0.7 * VREF	V	V_{REF}>=VDDANA-0.3V, Gaincorr = 0x1
SDADC_9		Full-Scale Analog Input Signal Range (Differential)	-VREF	—	+VREF	V	V_{REF}<VDDANA-0.3V, Gaincorr = 0x1
SDADC_10			-0.7*VREF	—	+0.7 * VREF	V	V_{REF}>=VDDANA-0.3V, Gaincorr = 0x1
SDADC_11	Vcom	Input Common mode voltage	GNDANA	—	AFS(max)	V	Differential mode

Notes:

1. This mode corresponds to a differential mode where the selected AINx pin is externally grounded.
2. SDADC functional device operation with either internal or external VREF<2.4V is functional, but not characterized. SDADC will function, but with degraded accuracy of approximately ~((0.06 * 2n) /VREF). Where "n" = #bits. SDADC accuracy is limited by internal VREF accuracy + drift, MCU generated noise plus users application noise/accuracy on VDDANA, GNDANA.

Table 43-28. SDADC Differential Mode Electrical Specifications

AC CHARACTERISTICS			Standard Operating Conditions: VDD and VDDIO 2.7V to 5.5V (unless otherwise stated) Operating temperature: -40°C ≤ TA ≤ +85°C for Industrial				
Param. No.	Symbol	Characteristics	Min.	Typical	Max.	Units	Conditions
DIFFERENTIAL MODE ADC Accuracy							
DSDADC_11	Res	Resolution		16		bits	
DSDADC_13	ENOB (1,2,3,5)	Effective Number of bits	13	—	—	bits	FTP(max), REFCTRL.REFSEL = 0x3 = VDDANA V_{REF} = VDDANA = 5.0V
DSDADC_19	INL(3,5)	Integral Nonlinearity	-7.9	—	8.7	LSb	
DSDADC_25	DNL(3,5)	Differential Nonlinearity	-1.0	—	3.3	LSb	
DSDADC_31	GERR (3,5)	Gain Error	-1.2	—	0.5	%	
DSDADC_37	EOFF(3,5)	Offset Error	-17	—	12	mV	
DIFFERENTIAL MODE ADC Dynamic Performance							
DSDADC_49	SINAD (1,2,3,5)	Signal to Noise and Distortion	80.1	—	—	dB	FTP(max), REFCTRL.REFSEL = 0x3 = VDDANA V_{REF} = VDDANA = 5.0V
DSDADC_51	SNR (1,2,3,6)	Signal to Noise ratio	85.0	—	—		
DSDADC_53	DR (1,2,3,6)	Dynamic Range	78.0	—	—		
DSDADC_55	THD (1,2,3,4,5)	Total Harmonic Distortion	—	—	-77.3		

Notes:

1. Characterized with an analog input sine wave at 500Hz with OSR=256.
2. Sinewave peak amplitude = -3dB SDADC_ Full Scale amplitude input with 16bit resolution.
3. Spec values collected under the following additional conditions:
   - All registers at reset default value otherwise not mentioned
4. Value taken over 7 harmonics.
5. Differential input mode, OSR = 256, SDADC Clock Period=166.7ns (6MHz), Chopper OFF (ANACTRL.ONCHOP = 0).

Table 43-29. SDADC Conversion Timing Requirements

AC CHARACTERISTICS			Standard Operating Conditions: VDD and VDDIO 2.7V to 5.5V (unless otherwise stated) Operating temperature: -40°C ≤ TA ≤ +85°C for Industrial				
Param. No.	**Symbol**	**Characteristics**	**Min.**	**Typical**	**Max.**	**Units**	**Conditions**
SDADC_ Clock Requirements							
SDADC_57	TAD	SDADC Clock Period	166.7	—	1000	ns	
SDADC_58	fGCLK_SDADC	SDADC Module GCLK max input freq	—	—	48	MHz	
SDADC_60	OSR	Oversampling ratio	64	256	1024	TAD	
SDADC Differential Mode Throughput Rates							
SDADC_61	FTP	Throughput Rate (1) Free Running mode	—	—	1/(TAD*4*OSR)	ksps	CTRLC.FREERUN=1
		Throughput Rate (1) Single Shot mode	—	—	1/(TAD*4*(N+1)*OSR)		CTRLC.FREERUN=0, N=SKPCNT

Note:

1. SDADC Throughput Rate FTP is divided by # of user active analog inputs in use on specific target SDADC module.

Table 43-30. SDADC Sample Timing Requirements

AC CHARACTERISTICS			Standard Operating Conditions: VDD and VDDIO 2.7V to 5.5V (unless otherwise stated) Operating temperature -40°C ≤ TA ≤ +85°C for Industrial				
Param. No.	**Symbol**	**Characteristics**	**Min.**	**Typical**	**Max.**	**Units**	**Conditions**
SDADC_63	SKPCNT	skip count (1)	2	—	15	TAD	register bits: CTRLB.SKPCNT[3:0]
SDADC_67	T_{CNV}	Conversion Time	(1/FTP)/TAD			TAD	
SDADC_69	C_{SAMPLE}	Internal Sample Cap	0.425	0.5	0.575	pF	
SDADC_71	R_{SAMPLE}	Internal input impedance	1/(Csample*1/(4*TAD))			kΩ	Differential mode
			1/(2 * Csample*1/(4*TAD))				Single-Ended mode
SDADC_72	Rext	Input anti-aliasing filter recommendation (2)	—	1	—	kΩ	
	Cext		3.3	—	10	nF	

Notes:

1. Number of skip samples before retrieve the first valid sample. The first valid sample starts from the (SKPCNT+1)th sample onward.
2. External anti-alias filter must be placed in front of each SDADC input to ensure high-frequency signals to not alias into measurement bandwidth. Use capacitors of X5R type for DC measurement, or capacitors of COG or NPO type for AC measurement.

43.20 Temperature Sensor (TSENS) Electrical Specifications

AC CHARACTERISTICS			Standard Operating Conditions: VDD and VDDIO 2.7V to 5.5V (unless otherwise stated) Operating temperature: -40°C ≤ TA ≤ +85°C for Industrial				
Param. No.	**Symbol**	**Characteristics**	**Min.**	**Typ**	**Max.**	**Units**	**Conditions**
TSENS_1	$TSENS_{ACC}$	Accuracy	-11.3	—	6.2	°C	0°C ≤ TA ≤ 60°C
			-14.6	—	10.5	°C	-40°C ≤ TA ≤ 85°C

43.21 Analog Comparator (AC) Electrical Specifications

Table 43-31. Analog Comparator Module Electrical Specifications

AC CHARACTERISTICS			Standard Operating Conditions: VDD and VDDIO 2.7V to 5.5V (unless otherwise stated) Operating temperature -40°C ≤ TA ≤ +85°C for Industrial				
Param. No.	Symbol	Characteristics	Min.	Typical(1)	Max.	Units	Conditions
CMP_1	VIOFF_00	Input Offset Voltage	-26	—	26	mV	COMPCTRLx.HYST = 0x0 COMPCTRLx.SPEED = 0x0
	VIOFF_01		-32	—	32	mV	COMPCTRLx.HYST = 0x1 COMPCTRLx.SPEED = 0x0
	VIOFF_02		-14	—	14	mV	COMPCTRLx.HYST = 0x0 COMPCTRLx.SPEED = 0x3
	VIOFF_03		-16	—	16	mV	COMPCTRLx.HYST = 0x1 COMPCTRLx.SPEED = 0x3
CMP_3	VICM	Input Common Mode Voltage	GNDNANA	—	VDDANA - 0.5V	V	
CMP_4	VIN	Input Voltage Range	GNDANA	—	VDDANA	V	With respect to GND and VDDANA
CMP_5	VHYST_00	Input Hysteresis Voltage	25	—	161	mV	COMPCTRLx.HYST = 0x1 COMPCTRLx.SPEED = 0x0
	VHYST_01	Input Hysteresis Voltage	50	—	141	mV	COMPCTRLx.HYST = 0x1 COMPCTRLx.SPEED = 0x3
CMP_15	$TRESP_{SS_LS}$(4)	Small Signal Response Time, low speed	—	—	219	ns	Comparator ref voltage=VDDANA/2 COMPCTRLx.HYST = 0x0 Input overdrive = ± 100mv COMPCTRL.SPEED = 0x0
CMP_17	$TRESP_{SS_HS}$(4)	Small Signal Response Time, high speed	—	—	65	ns	Comparator ref voltage=VDDANA/2 COMPCTRLx.HYST = 0x0 Input overdrive = ± 100mv COMPCTRLx.SPEED = 0x3
CMP_19	C_{OUTVAL_01}	Comparator Enabled to Output Valid	—	—	12.7	ms	Comparator module is configured before enabling it COMPCTRLx.SPEED = 0x0
	C_{OUTVAL_02}		—	—	3.8	ms	Comparator module is configured before enabling it COMPCTRLx.SPEED = 0x3
CMP_21	AC_{IREF}	Comparator Internal Band Gap Voltage Reference	(3)	(3)	(3)	V	See ACIREF Spec Parameters: VR_9-VR_13
CMP_23	$C_{VREFRNG}$	Comparator Voltage Reference Input Range	(2)	—	(2)	V	See NOTE(2)
CMP_25	F_{GCLK_AC}	Analog comparator peripheral module clock freq	—	—	FCLK_49	MHz	See parameter FCLK_49 in Maximum Clock Frequency Table

.....continued

AC CHARACTERISTICS			Standard Operating Conditions: VDD and VDDIO 2.7V to 5.5V (unless otherwise stated) Operating temperature -40°C ≤ TA ≤ +85°C for Industrial				
Param. No.	Symbol	Characteristics	Min.	Typical(1)	Max.	Units	Conditions

Notes:

1. Values in TYPICAL column are taken at 25°C.
2. Comparator Ref voltage cannot exceed (VIN(max) - VIOFF(max) - (CMP_5(max) + 50mV)) ≥ CMP VREF ≥ (VIN(min) + VIOFF(min) + (CMP_5(max) + 50mV)).
3. See Internal Voltage Ref Spec Parameters: VR_9-VR_13.
4. TRESP is measured from Vin transition to ACOUT (AC direct output) toggle. It takes into account only analog propagation delay.

43.22 Serial Peripheral Interface (SERCOM SPI) Mode Electrical Specifications

Figure 43-6. SERCOMx SPI Master Module CPHA=0 AC Timing Diagrams

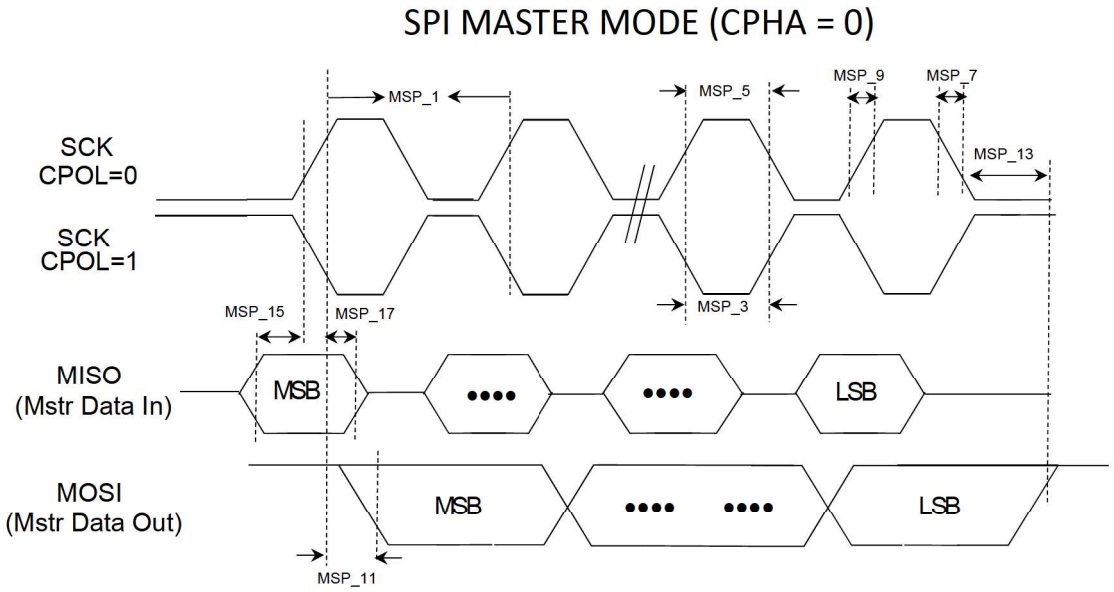

Figure 43-7. SERCOMx SPI Master Module CPHA=1 AC Timing Diagrams

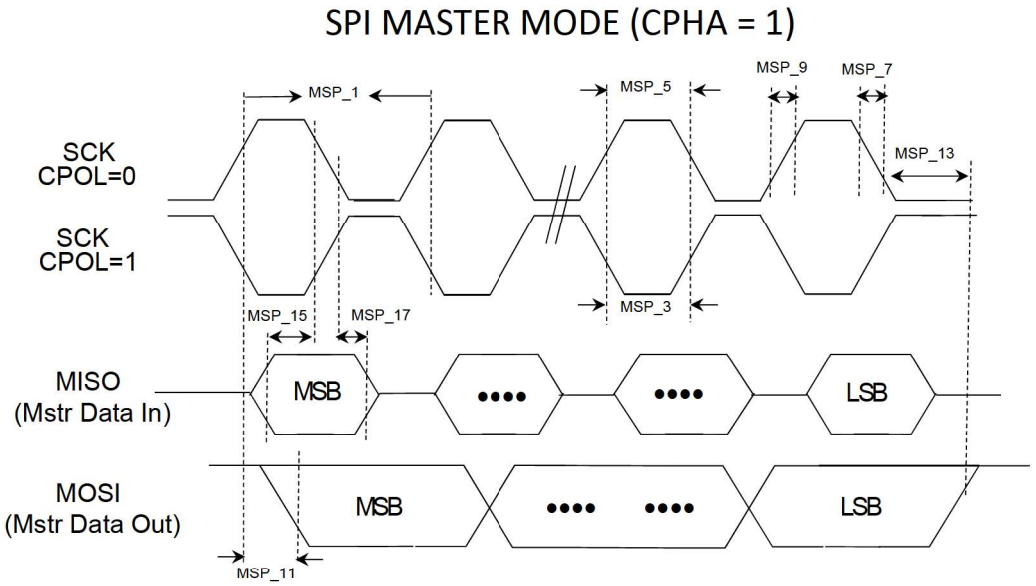

Table 43-32. SPIx Module Master Mode Electrical Specifications (1)

AC CHARACTERISTICS			Standard Operating Conditions: VDD and VDDIO 2.7V to 5.5V (unless otherwise stated) Operating temperature: -40°C ≤ TA ≤ +85°C for Industrial				
Param. No.	**Symbol**	**Characteristics(1)**	**Min.**	**Typical**	**Max.**	**Units**	**Conditions**
MSP_1	FSCK	SCK Frequency	—	—	4.8	MHz	VDDIO = 3.3V, C_{LOAD}=30pF(MIN)
			—	—	4.8		VDDIO = 5.0V, C_{LOAD}=30pF(MIN)
MSP_3	TSCL	SCK Output Low Time	1/(2*FSCK)	—	—	ns	—
MSP_5	TSCH	SCK Output High Time	1/(2*FSCK)	—	—	ns	—
MSP_7	TSCF	SCK & MOSI Output Fall Time	—	—	DI_27	ns	See parameter DI_27 I/O spec
MSP_9	TSCR	SCK & MOSI Output Rise Time	—	—	DI_25	ns	See parameter DI_25 I/O spec
MSP_11	TMOV	MOSI Data Output Valid after SCK	—	—	42.3	ns	VDDIO = 2.7V, C_{LOAD}=30pF(MIN)
MSP_13	TMOH	MOSI hold after SCK	11.6	—	—	ns	
MSP_15	TMIS	MISO Setup Time of Data Input to SCK	62.5	—	—	ns	
MSP_17	TMIH	MISO Hold Time of Data Input to SCK	10.6	—	—	ns	
MSP_19	SPI_GCLK	SERCOM SPI input clk freq, GCLK_SPI	—	—	48	MHz	

Note:

1. Assumes VDDIO = 2.7V and 30pF external load on all SPIx pins unless otherwise noted.

Figure 43-8. SERCOMx SPI Slave Module (CPHA=0) AC Timing Diagram

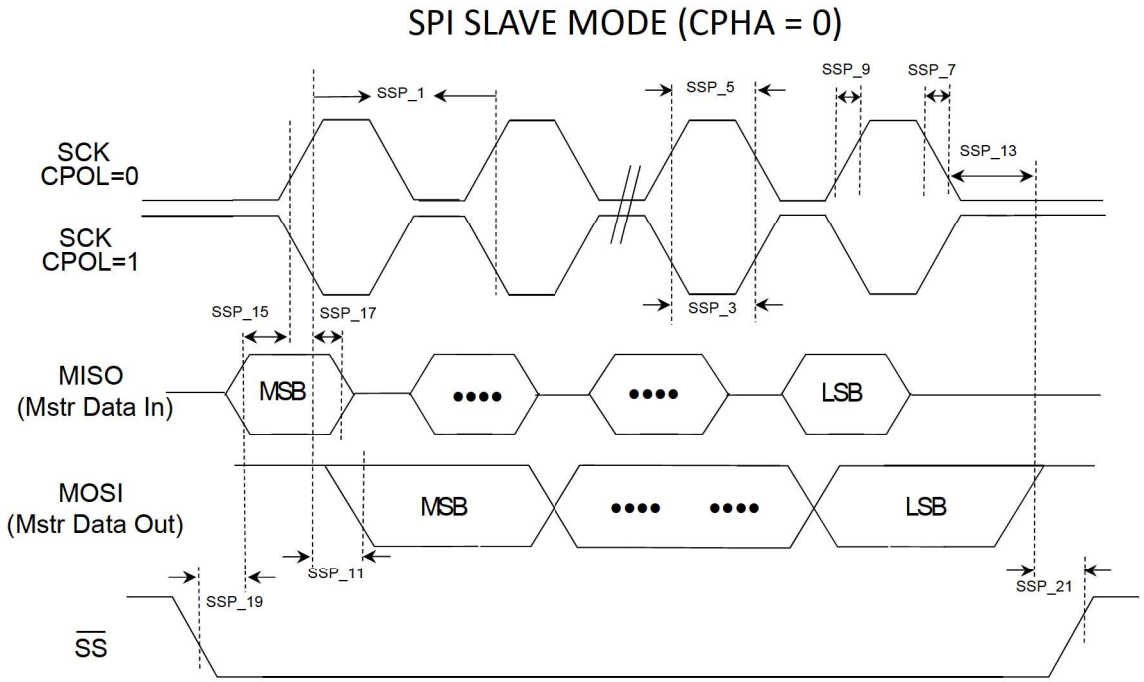

Figure 43-9. SERCOMx SPI Slave Module (CPHA=1) AC Timing Diagram

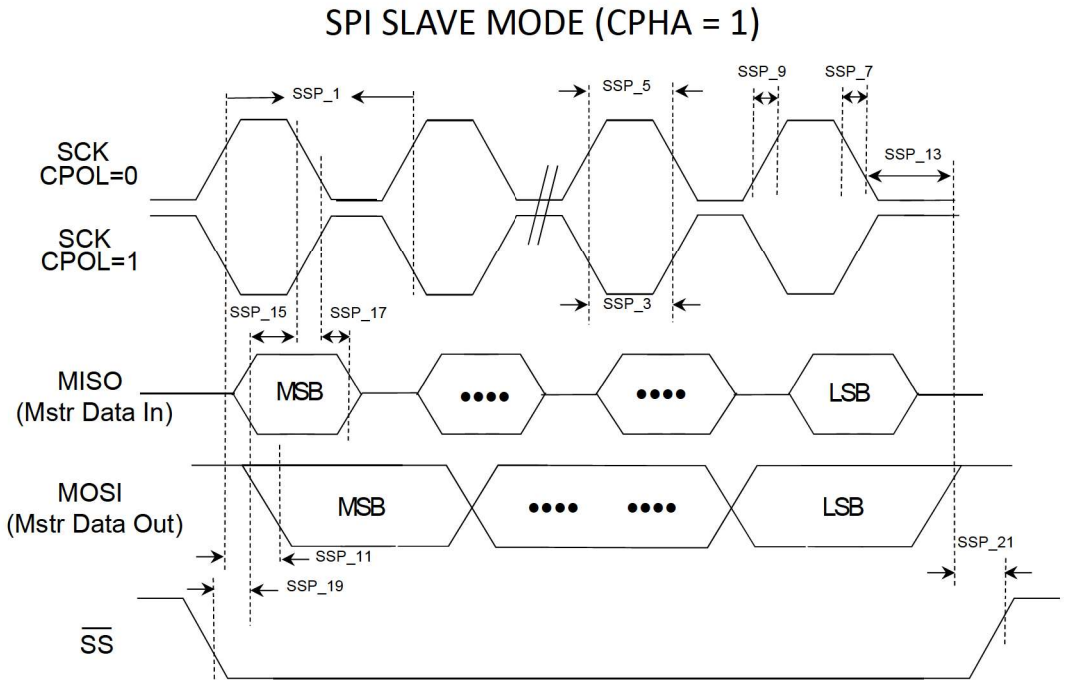

Table 43-33. SPIx Module Slave Mode Electrical Specifications (1)

AC CHARACTERISTICS			Standard Operating Conditions: VDD and VDDIO 2.7V to 5.5V (unless otherwise stated) Operating temperature: -40°C ≤ TA ≤ +85°C for Industrial				
Param. No.	Symbol	Characteristics(1)	Min.	Typical	Max.	Units	Conditions
SSP_1	FSCK	SCK Frequency	—	—	4.8	MHz	VDDIO = 3,3V, C_{LOAD}=30pF(MIN)
			—	—	4.8		VDDIO = 5.0V, C_{LOAD}=30pF(MIN)
SSP_3	TSCL	SCK Output Low Time	1/(2*FSCK)	—	—	ns	—
SSP_5	TSCH	SCK Output High Time	1/(2*FSCK)	—	—	ns	—
SSP_7	TSCF	SCK & MISO Output Fall Time	—	—	DI_27	ns	See parameter DI_27 I/O spec
SSP_9	TSCR	SCK & MISO Output Rise Time	—	—	DI_25	ns	See parameter DI_25 I/O spec
SSP_11	TSOV	MISO Data Output Valid after SCK	—	—	80.43	ns	VDDIO = 2.7V, C_{LOAD}=30pF(MIN)
SSP_13	TSOH	MISO hold after SCK	22.3	—	—	ns	
SSP_15	TSIS	MOSI Setup Time of Data Input to SCK	14.1	—	—	ns	
SSP_17	TSIH	MOSI Hold Time of Data Input to SCK	8.49	—	—	ns	
SSP_19	TSSS	SS setup to SCK (PRELOADEN=1)	2*tck_APB+20.86	—	—	ns	
		SS setup to SCK (PRELOADEN=0)	20.86	—	—	ns	
SSP_21	TSSH	SS hold after SCK Slave	2.07	—	—	ns	
SSP_23	SPI_GCLK	SERCOM SPI input clk freq, GCLK_SPI	—	—	48	MHz	

Note:
1. Assumes VDDIO = 2.7V and 30pF external load on all SPIx pins unless otherwise noted.

43.23 SERCOM Universal Synchronous and Asynchronous Receiver and Transmitter (SERCOM USART)

Table 43-34. SERCOM USART Electrical Specifications

AC CHARACTERISTICS				Standard Operating Conditions: VDD and VDDIO 2.7V to 5.5V (unless otherwise stated) Operating temperature: -40°C ≤ TA ≤ +85°C for Industrial				
Param. No.	Symbol	Characteristics		Min.	Typical	Max.(1)	Units	Conditions
UT_1	FBRATE	Baud Rate	Asynchronous Arithmetic SAMPR = 16x	—	—	3	Mbps	VDDIO = 2.7V
UT_3			Asynchronous Arithmetic SAMPR = 8x	—	—	6	Mbps	
UT_5			Asynchronous Arithmetic SAMPR = 3x	—	—	6	Mbps	
UT_21			Synchronous Mode, External clock, (i.e. XCK)	—	—	2.4	Mbps	VDDIO = 2.7V
UT_23	FUSART	USART max GCLK_SERCOM		—	—	48	MHz	VDDIO = 2.7V
UT_25	FXCK	USART External Clock Input		—	—	48	MHz	

Note:
1. These parameters are characterized, but not tested in manufacturing.

43.24 SERCOM Inter-Integrated Circuit (SERCOM I²C) Electrical Specifications

Figure 43-10. I²C Start/Stop Bits Master Mode Timing Diagrams

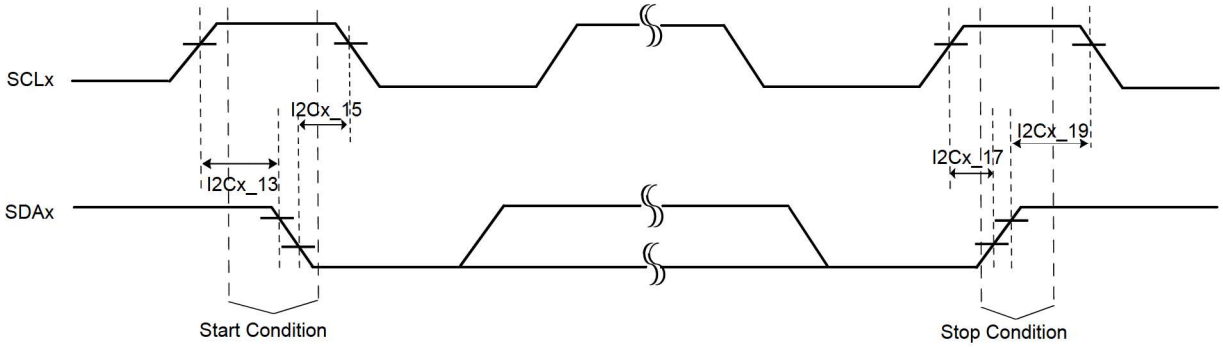

Figure 43-11. I²C Bus Data Master Mode Timing Diagrams

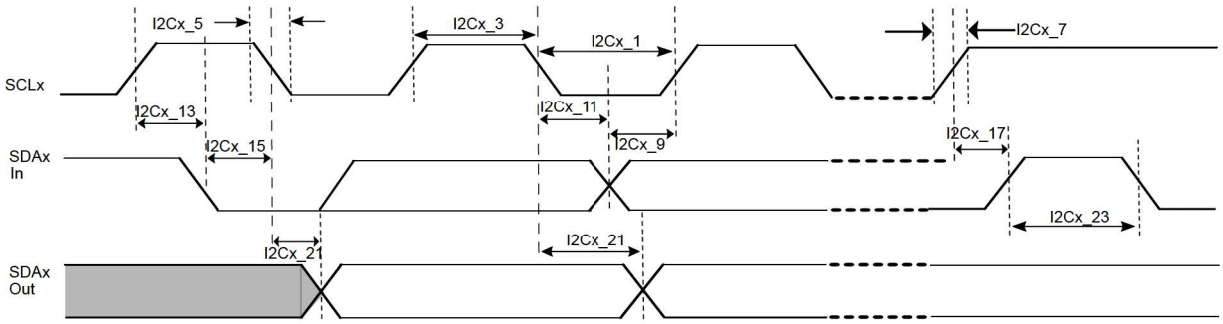

Table 43-35. I²C Master Mode Electrical Specifications

AC CHARACTERISTICS_				Standard Operating Conditions: VDD and VDDIO 2.7V to 5.5V (unless otherwise stated) Operating temperature: -40°C ≤ TA ≤ +85°C for Industrial			
Param. No.	Symbol	Characteristics(1)		Min.	Max.	Units	Conditions
I2CM_1	TL0:SCL	Mstr Clock Low Time	100 kHz mode	4.7	—	µs	VDDIO = 5.0V, $I_{PULL-UP}$ = 3ma, C_{LOAD}=400pF
			400 kHz mode	1.3	—	µs	
			1 MHz mode	0.5	—	µs	VDDIO = 5.0V, $I_{PULL-UP}$ = 20ma, C_{LOAD}=550pF
			3.4 MHz mode	160	—	ns	VDDIO = 5.0V, $I_{PULL-UP}$ = 20ma, C_{LOAD}=100pF
I2CM_3	THI:SCL	Mstr Clock High Time	100 kHz mode	5.3	—	µs	VDDIO = 5.0V, $I_{PULL-UP}$ = 3ma, C_{LOAD}=400pF
			400 kHz mode	1.2	—	µs	
			1 MHz mode	0.5	—	µs	VDDIO = 5.0V, $I_{PULL-UP}$ = 20ma, C_{LOAD}=550pF
			3.4 MHz mode	134	—	ns	VDDIO = 5.0V, $I_{PULL-UP}$ = 20ma, C_{LOAD}=100pF

.....continued

AC CHARACTERISTICS_				Standard Operating Conditions: VDD and VDDIO 2.7V to 5.5V (unless otherwise stated) Operating temperature: -40°C ≤ TA ≤ +85°C for Industrial			
Param. No.	Symbol	Characteristics(1)		Min.	Max.	Units	Conditions
I2CM_5	TF:SCL	SDAx and SCLx Fall Time	100 kHz mode	—	250	ns	VDDIO = 5.0V, $I_{PULL-UP}$ = 3ma, C_{LOAD}=400pF
			400 kHz mode	—	250	ns	
			1 MHz mode	—	250	ns	VDDIO = 5.0V, $I_{PULL-UP}$ = 20ma, C_{LOAD}=550pF
			3.4 MHz mode	—	40	ns	VDDIO = 5.0V, $I_{PULL-UP}$ = 20ma, C_{LOAD}=100pF
I2CM_7	TR:SCL	SDAx and SCLx Rise Time	100 kHz mode	—	1000	ns	VDDIO = 5.0V, $I_{PULL-UP}$ = 3ma, C_{LOAD}=400pF
			400 kHz mode	—	300	ns	
			1 MHz mode	—	120	ns	VDDIO = 5.0V, $I_{PULL-UP}$ = 20ma, C_{LOAD}=550pF
			3.4 MHz mode	—	40	ns	VDDIO = 5.0V, $I_{PULL-UP}$ = 20ma, C_{LOAD}=100pF
I2CM_9	TSU:DAT	Data Input Setup Time	100 kHz mode	104	—	ns	VDDIO = 5.0V, IPULL-UP = 3ma, C_{LOAD}=400pF
			400 kHz mode	104	—	ns	
			1 MHz mode	104	—	ns	VDDIO = 5.0V, $I_{PULL-UP}$ = 20ma, C_{LOAD}=550pF
			3.4 MHz mode	104	—	ns	VDDIO = 5.0V, $I_{PULL-UP}$ = 20ma, C_{LOAD}=100pF
I2CM_11	THD:DAT	Data Input Hold Time	100 kHz mode	9	—	ns	VDDIO = 5.0V, $I_{PULL-UP}$ = 3ma, C_{LOAD}=400pF
			400 kHz mode	9	—	ns	
			1 MHz mode	9	—	ns	VDDIO = 5.0V, $I_{PULL-UP}$ = 20ma, C_{LOAD}=550pF
			3.4 MHz mode	9	—	ns	VDDIO = 5.0V, $I_{PULL-UP}$ = 20ma, C_{LOAD}=100pF
I2CM_13	TSU:STA	Start Condition Setup Time	100 kHz mode	4.7	—	µs	VDDIO = 5.0V, $I_{PULL-UP}$ = 3ma, C_{LOAD}=400pF
			400 kHz mode	1.3	—	µs	
			1 MHz mode	507	—	ns	VDDIO = 5.0V, $I_{PULL-UP}$ = 20ma, C_{LOAD}=550pF
			3.4 MHz mode	167	—	ns	VDDIO = 5.0V, $I_{PULL-UP}$ = 20ma, C_{LOAD}=100pF
I2CM_15	THD:STA	Start Condition Hold Time	100 kHz mode	4.7		µs	VDDIO = 5.0V, $I_{PULL-UP}$ = 3ma, C_{LOAD}=400pF
			400 kHz mode	1.3	—	µs	
			1 MHz mode	491	—	ns	VDDIO = 5.0V, $I_{PULL-UP}$ = 20ma, C_{LOAD}=550pF
			3.4 MHz mode	151	—	ns	VDDIO = 5.0V, $I_{PULL-UP}$ = 20ma, C_{LOAD}=100pF

.....continued

AC CHARACTERISTICS_				Standard Operating Conditions: VDD and VDDIO 2.7V to 5.5V (unless otherwise stated) Operating temperature: -40°C ≤ TA ≤ +85°C for Industrial			
Param. No.	Symbol	Characteristics(1)		Min.	Max.	Units	Conditions
I2CM_17	TSU:ST0	Stop Condition Setup Time	100 kHz mode	4.7	—	µs	VDDIO = 5.0V, $I_{PULL-UP}$ = 3ma, C_{LOAD}=400pF
			400 kHz mode	1.3	—	µs	
			1 MHz mode	509	—	ns	VDDIO = 5.0V, $I_{PULL-UP}$ = 20ma, C_{LOAD}=550pF
			3.4 MHz mode	169	—	ns	VDDIO = 5.0V, $I_{PULL-UP}$ = 20ma, C_{LOAD}=100pF
I2CM_19	THD:ST0	Stop Condition Hold Time	100 kHz mode	21	—	ns	VDDIO = 5.0V, $I_{PULL-UP}$ = 3ma, C_{LOAD}=400pF
			400 kHz mode	21	—	ns	
			1 MHz mode	21	—	ns	VDDIO = 5.0V, $I_{PULL-UP}$ = 20ma, C_{LOAD}=550pF
			3.4 MHz mode	21	—	ns	VDDIO = 5.0V, $I_{PULL-UP}$ = 20ma, C_{LOAD}=100pF
I2CM_21	TAA:SCL	0utput Valid from Clock	100 kHz mode	—	176	ns	VDDIO = 5.0V, $I_{PULL-UP}$ = 3ma, C_{LOAD}=400pF
			400 kHz mode	—	137	ns	
			1 MHz mode	—	170	ns	VDDIO = 5.0V, $I_{PULL-UP}$ = 20ma, C_{LOAD}=550pF
			3.4 MHz mode	—	167	ns	VDDIO = 5.0V, $I_{PULL-UP}$ = 20ma, C_{LOAD}=100pF
I2CM_23	TBF:SDA	Bus Free Time (1)	100 kHz mode	4.7	—	µs	VDDIO = 5.0V, $I_{PULL-UP}$ = 3ma, C_{LOAD}=400pF
			400 kHz mode	1.3	—	µs	
			1 MHz mode	500	—	ns	VDDIO = 5.0V, $I_{PULL-UP}$ = 20ma, C_{LOAD}=550pF
			3.4 MHz mode	160	—	ns	VDDIO = 5.0V, $I_{PULL-UP}$ = 20ma, C_{LOAD}=100pF

Note:

1. The amount of time the bus must be free before a new transmission can start (STOP condition to START condition).

Figure 43-12. I²C Start/Stop Bits Slave Mode Timing Diagram

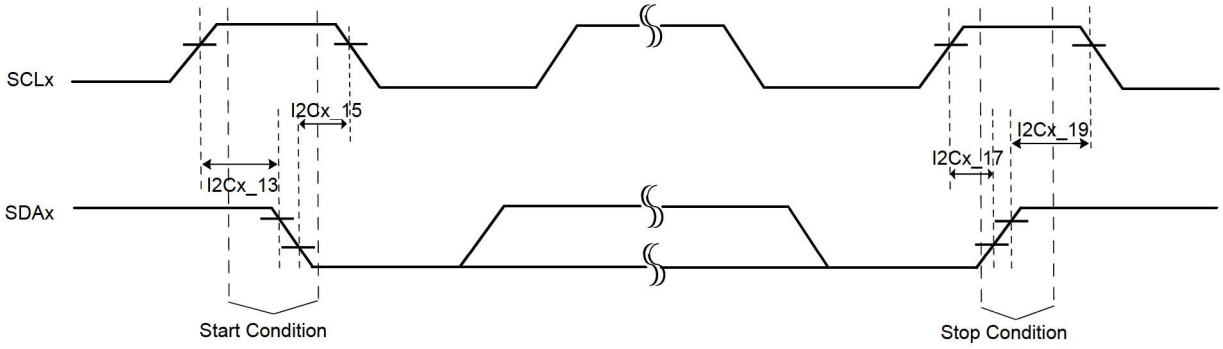

Figure 43-13. I²C Bus Data Slave Mode Timing Diagrams

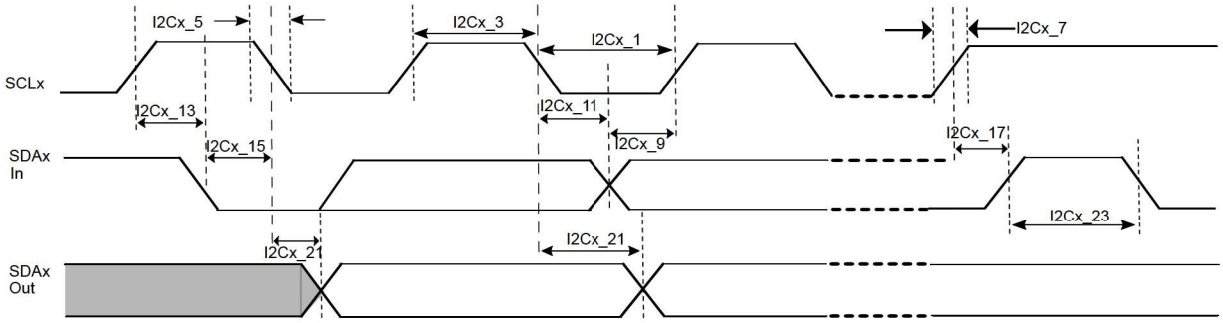

Table 43-36. I²C Slave Mode Electrical Specifications

AC CHARACTERISTI2CS_				Standard Operating Conditions: VDD and VDDIO 2.7V to 5.5V (unless otherwise stated) Operating temperature: -40°C ≤ TA ≤ +85°C for Industrial			
Param. No.	**Symbol**	**Characteristics(1)**		**Min.**	**Max.**	**Units**	**Conditions**
I2CS_1	TL0:SCL	Slave Clock Low Time	100 kHz mode	4.7	—	µs	VDDIO = 5.0V, $I_{PULL-UP}$ = 3ma, C_{LOAD}=400pF
			400 kHz mode	1.3	—	µs	
			1 MHz mode	500	—	ns	VDDIO = 5.0V, $I_{PULL-UP}$ = 20ma, C_{LOAD}=550pF
			3.4 MHz mode	160	—	ns	VDDIO = 5.0V, $I_{PULL-UP}$ = 20ma, C_{LOAD}=100pF
I2CS_3	THI:SCL	Slave Clock High Time	100 kHz mode	5.3	—	µs	VDDIO = 5.0V, $I_{PULL-UP}$ = 3ma, C_{LOAD}=400pF
			400 kHz mode	1.2	—	µs	
			1 MHz mode	500	—	ns	VDDIO = 5.0V, $I_{PULL-UP}$ = 20ma, C_{LOAD}=550pF
			3.4 MHz mode	134	—	ns	VDDIO = 5.0V, $I_{PULL-UP}$ = 20ma, C_{LOAD}=100pF
I2CS_5	TF:SCL	SDAx and SCLx Fall Time	100 kHz mode	—	250	ns	VDDIO = 5.0V, $I_{PULL-UP}$ = 3ma, C_{LOAD}=400pF
			400 kHz mode	—	250	ns	
			1 MHz mode	—	250	ns	VDDIO = 5.0V, $I_{PULL-UP}$ = 20ma, C_{LOAD}=550pF
			3.4 MHz mode	—	40	ns	VDDIO = 5.0V, $I_{PULL-UP}$ = 20ma, C_{LOAD}=100pF
I2CS_7	TR:SCL	SDAx and SCLx Rise Time	100 kHz mode	—	1000	ns	VDDIO = 5.0V, $I_{PULL-UP}$ = 3ma, C_{LOAD}=400pF
			400 kHz mode	—	300	ns	
			1 MHz mode	—	120	ns	VDDIO = 5.0V, $I_{PULL-UP}$ = 20ma, C_{LOAD}=550pF
			3.4 MHz mode	—	40	ns	VDDIO = 5.0V, $I_{PULL-UP}$ = 20ma, C_{LOAD}=100pF

.....continued

AC CHARACTERISTI2CS_				Standard Operating Conditions: VDD and VDDIO 2.7V to 5.5V (unless otherwise stated) Operating temperature: -40°C ≤ TA ≤ +85°C for Industrial			
Param. No.	Symbol	Characteristics(1)		Min.	Max.	Units	Conditions
I2CS_9	TSU:DAT	Data Input Setup Time	100 kHz mode	51	—	ns	VDDIO = 5.0V, $I_{PULL-UP}$ = 3ma, C_{LOAD}=400pF
			400 kHz mode	51	—	ns	
			1 MHz mode	51	—	ns	VDDIO = 5.0V, $I_{PULL-UP}$ = 20ma, C_{LOAD}=550pF
			3.4 MHz mode	51	—	ns	VDDIO = 5.0V, $I_{PULL-UP}$ = 20ma, C_{LOAD}=100pF
I2CS_11	THD:DAT	Data Input Hold Time	100 kHz mode	71	—	ns	VDDIO = 5.0V, $I_{PULL-UP}$ = 3ma, C_{LOAD}=400pF
			400 kHz mode	71	—	ns	
			1 MHz mode	71	—	ns	VDDIO = 5.0V, $I_{PULL-UP}$ = 20ma, C_{LOAD}=550pF
			3.4 MHz mode	71	—	ns	VDDIO = 5.0V, $I_{PULL-UP}$ = 20ma, C_{LOAD}=100pF
I2CS_13	TSU:STA	Start Condition Setup Time	100 kHz mode	156	—	ns	VDDIO = 5.0V, $I_{PULL-UP}$ = 3ma, C_{LOAD}=400pF
			400 kHz mode	114	—	ns	
			1 MHz mode	108	—	ns	VDDIO = 5.0V, $I_{PULL-UP}$ = 20ma, C_{LOAD}=550pF
			3.4 MHz mode	106	—	ns	VDDIO = 5.0V, $I_{PULL-UP}$ = 20ma, C_{LOAD}=100pF
I2CS_15	THD:STA	Start Condition Hold Time	100 kHz mode	43	—	ns	VDDIO = 5.0V, $I_{PULL-UP}$ = 3ma, C_{LOAD}=400pF
			400 kHz mode	64	—	ns	
			1 MHz mode	70	—	ns	VDDIO = 5.0V, $I_{PULL-UP}$ = 20ma, C_{LOAD}=550pF
			3.4 MHz mode	73	—	ns	VDDIO = 5.0V, $I_{PULL-UP}$ = 20ma, C_{LOAD}=100pF
I2CS_17	TSU:ST0	Stop Condition Setup Time	100 kHz mode	156	—	ns	VDDIO = 5.0V, $I_{PULL-UP}$ = 3ma, C_{LOAD}=400pF
			400 kHz mode	114	—	ns	
			1 MHz mode	108	—	ns	VDDIO = 5.0V, $I_{PULL-UP}$ = 20ma, C_{LOAD}=550pF
			3.4 MHz mode	106	—	ns	VDDIO = 5.0V, $I_{PULL-UP}$ = 20ma, C_{LOAD}=100pF
I2CS_19	THD:ST0	Stop Condition Hold Time	100 kHz mode	43		ns	VDDIO = 5.0V, $I_{PULL-UP}$ = 3ma, C_{LOAD}=400pF
			400 kHz mode	65	—	ns	
			1 MHz mode	70	—	ns	VDDIO = 5.0V, $I_{PULL-UP}$ = 20ma, C_{LOAD}=550pF
			3.4 MHz mode	73	—	ns	VDDIO = 5.0V, $I_{PULL-UP}$ = 20ma, C_{LOAD}=100pF

.....continued

AC CHARACTERISTI2CS_				Standard Operating Conditions: VDD and VDDIO 2.7V to 5.5V (unless otherwise stated) Operating temperature: -40°C ≤ TA ≤ +85°C for Industrial			
Param. No.	Symbol	Characteristics(1)		Min.	Max.	Units	Conditions
I2CS_21	TAA:SCL	Output Valid from Clock	100 kHz mode	—	189	ns	VDDIO = 5.0V, $I_{PULL-UP}$ = 3ma, C_{LOAD}=400pF
			400 kHz mode	—	151	ns	
			1 MHz mode	—	182	ns	VDDIO = 5.0V, $I_{PULL-UP}$ = 20ma, C_{LOAD}=550pF
			3.4 MHz mode	—	180	ns	VDDIO = 5.0V, $I_{PULL-UP}$ = 20ma, C_{LOAD}=100pF
I2CS_23	TBF:SDA	Bus Free Time (1)	100 kHz mode	4.7	—	µs	VDDIO = 5.0V, $I_{PULL-UP}$ = 3ma, C_{LOAD}=400pF
			400 kHz mode	1.3	—	µs	
			1 MHz mode	500	—	ns	VDDIO = 5.0V, $I_{PULL-UP}$ = 20ma, C_{LOAD}=550pF
			3.4 MHz mode	160	—	ns	VDDIO = 5.0V, $I_{PULL-UP}$ = 20ma, C_{LOAD}=100pF

Note:

1. The amount of time the bus must be free before a new transmission can start (STOP condition to START condition).

43.25 Timer Counter (TC) Module Electrical Specifications

Figure 43-14. TCx Timer Capture Input Module Timing Diagram

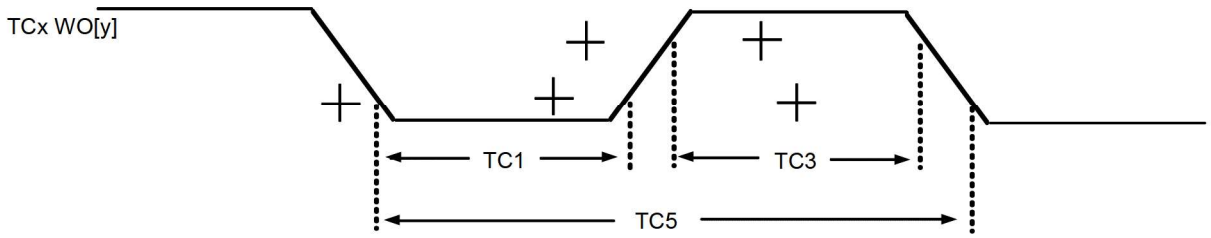

Figure 43-15. TCx Timer Compare Output Module Timing Diagram

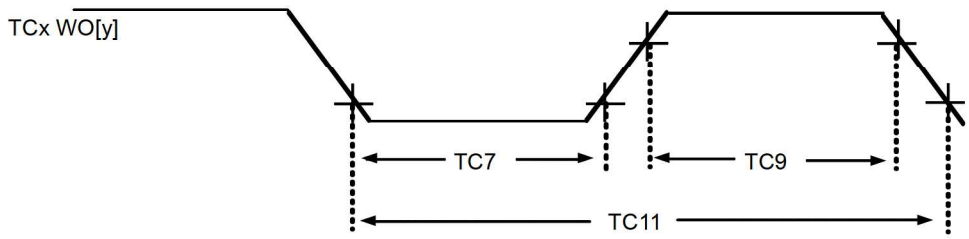

Table 43-37. TCx Timer Capture Module Electrical Specifications

AC CHARACTERISTICS			Standard Operating Conditions: VDD and VDDIO 2.7V to 5.5V (unless otherwise stated) Operating temperature: -40°C ≤ TA ≤ +85°C for Industrial				
Param. No.	Symbol	Characteristics	Min.	Typical	Max.	Units	Conditions
TC_1	TC_{INLOW}	Capture TCx Input Low Time	$2/f_{GLK_TCx}$	—	—	ns	VDDIO = 2.7V and meet TC_5 spec
TC_3	TC_{INHIGH}	Capture TCx Input High Time	$2/f_{GLK_TCx}$	—	—	ns	VDDIO = 2.7V and meet TC_5 spec
TC_5	$TC_{INPERIOD}$	Capture Input Period	$4/f_{GLK_TCx}$	—	—	ns	VDDIO = 2.7V
TC_7	TC_{OUTLOW}	Compare TCx Output Low Time	33	—	—	ns	VDDIO = 2.7V and meet TC_11 spec
TC_9	$TC_{OUTHIGH}$	Compare TCx Output High Time	33	—	—	ns	VDDIO = 2.7V and meet TC_11 spec
TC_11	$TC_{OUTPERIOD}$	Compare Output Period	66	—	—	ns	VDDIO = 2.7V
TC_13	f_{GCLK_TCx}	TC peripheral module clock frequency	—	—	48	MHz	VDDIO = 2.7V

43.26 Timer/Counter for Control (TCC) Applications Electrical Specifications

Figure 43-16. TCCx Timer Capture Input Module Timing Diagrams

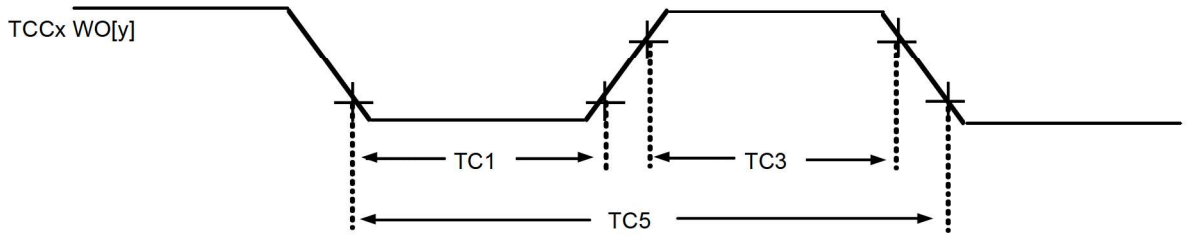

Figure 43-17. TCCx Timer Compare Output Module Timing Diagrams

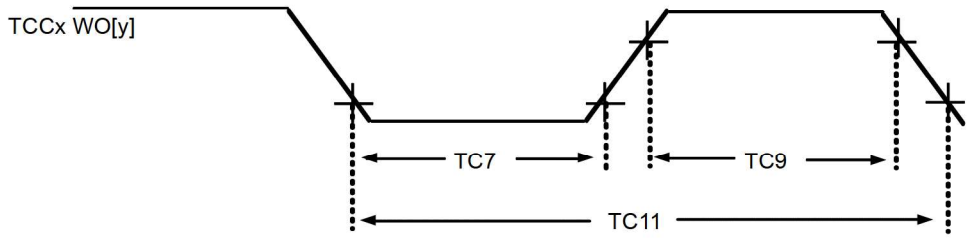

Figure 43-18. TCCx Timer Compare Fault Output Module Timing Diagrams

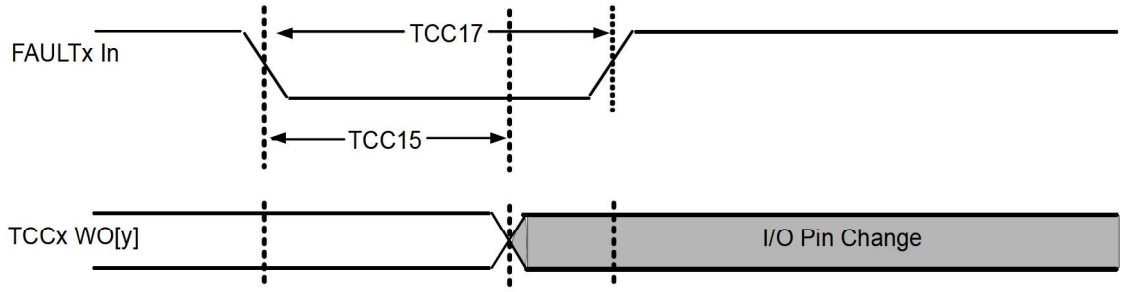

Table 43-38. TCC0, 1 Timer Capture Module Electrical Specifications

AC CHARACTERISTICS			Standard Operating Conditions: VDD and VDDIO 2.7V to 5.5V (unless otherwise stated) Operating temperature: -40°C ≤ TA ≤ +85°C for Industrial				
Param. No.	Symbol	Characteristics	Min.	Typical	Max.	Units	Conditions
TCC_1	TCC_{INLOW}	Capture TCCx Input Low Time	$2/f_{GLK_TCCx}$	—	—	ns	VDDIO = 2.7V and meet TCC_5 spec
TCC_3	TCC_{INHIGH}	Capture TCCx Input High Time	$2/f_{GLK_TCCx}$	—	—	ns	VDDIO = 2.7V and meet TCC_5 spec
TCC_5	$TCC_{INPERIOD}$	Capture Input Period	$4/f_{GLK_TCCx}$	—	—	ns	VDDIOx(min)
TCC_7	TCC_{OUTLOW}	Compare TCCx Output Low Time	33	—	—	ns	VDDIO = 2.7V and meet TCC_11 spec
TCC_9	$TCC_{OUTHIGH}$	Compare TCCx Output High Time	33	—	—	ns	VDDIO = 2.7V and meet TCC_11 spec
TCC_11	$TCC_{OUTPERIOD}$	Compare Output Period	66	—	—	ns	VDDIO = 2.7V
TCC_13	f_{GCLK_TCCx}	TCC peripheral module clock frequency	—	—	96	MHz	

Table 43-39. TCC2 Timer Capture Electrical Specifications

AC CHARACTERISTICS			Standard Operating Conditions: VDD and VDDIO 2.7V to 5.5V (unless otherwise stated) Operating temperature: -40°C ≤ TA ≤ +85°C for Industrial				
Param. No.	Symbol	Characteristics	Min.	Typical	Max.	Units	Conditions
TCC_19	TCC_{INLOW}	Capture TCC2 Input Low Time	$2/f_{GLK_TCC2}$	—	—	ns	VDDIO = 2.7V and meet TCC_23 spec
TCC_21	TCC_{INHIGH}	Capture TCC2 Input High Time	$2/f_{GLK_TCC2}$	—	—	ns	VDDIO = 2.7V and meet TCC_23 spec
TCC_23	$TCC_{INPERIOD}$	Capture Input Period	$4/f_{GLK_TCC2}$	—	—	ns	VDDIO = 2.7V
TCC_25	TCC_{OUTLOW}	Compare TCC2 Output Low Time	33	—	—	ns	VDDIO = 2.7V and meet TCC_29 spec
TCC_27	$TCC_{OUTHIGH}$	Compare TCC2 Output High Time	33	—	—	ns	VDDIO = 2.7V and meet TCC_29 spec
TCC_29	$TCC_{OUTPERIOD}$	Compare Output Period	66	—	—	ns	VDDIO = 2.7V
TCC_31	f_{GCLK_TCC2}	TCC peripheral module clock frequency	—	—	48	MHz	

43.27 Frequency Meter (FREQM) Electrical Specifications

Table 43-40. Frequency Meter AC Electrical Specifications

AC CHARACTERISTICS			Standard Operating Conditions: VDD and VDDIO 2.7V to 5.5V (unless otherwise stated) Operating temperature: -40°C ≤ TA ≤ +85°C for Industrial				
Param. No.	Symbol	Characteristics	Min.	Typical	Max.	Units	Conditions
FM_1	FM_{LOW}	GCLK_IOx Input Low Time	10.5	—	—	ns	VDDIO = 2.7V and meet FM5 spec
FM_3	FM_{HIGH}	GCLK_IOx Input High Time	10.5	—	—	ns	
FM_5	FM_{PERIOD}	GCLK_IOx Input Period	21	—	—	ns	VDDIO = 2.7V
FM_7	$f_{GCLK_FREQM_REF}$	FREQM Reference	—	—	FCLK_17	MHz	VDDIO = 2.7V See parameter FCLK_17 in Maximum Clock Frequency table
FM_9	$f_{GCLK_FREQM_MSR}$	FREQM Measure	—	—	FCLK_15	MHz	VDDIO = 2.7V See parameter FCLK_15 in Maximum Clock Frequency table

43.28 Flash NVM Electrical Specifications

Table 43-41. Flash NVM AC Electrical Specifications

AC CHARACTERISTICS				Standard Operating Conditions: VDD and VDDIO 2.7V to 5.5V (unless otherwise stated) Operating temperature -40°C ≤ TA ≤ +85°C for Industrial				
Param. No.	**Symbol**	**Characteristics**		**Min.**	**Typical**	**Max.**	**Units**	**Conditions**
NVM_1	F_{RETEN}	Flash Data Retention		20	—	—	Yrs	Under all conditions less than Absolute Maximum Ratings specifications
NVM_3	EP	Cell Endurance (Flash Erase and Wite Operation)		25000	—	—	Cycles	
NVM_5	F_{READ}	Flash Read	0 Wait States	—	—	23	MHz	VDDIO = 5.0V
			1 Wait States	—	—	46		
			2 Wait States	—	—	48		
			0 Wait States	—	—	22	MHz	VDDIO = 3.3V
			1 Wait States	—	—	45		
			2 Wait States	—	—	48		
NVM_7	T_{FPW}	Program Cycle Time	Write Page	—	—	2.5	ms	
NVM_9	T_{CE}		Erase Chip	—	—	260	ms	
NVM_11	T_{FER}		Erase Row	—	—	6	ms	
NVM_13	IDD_{PROG}	Supply Current during Programming of a page		—	—	1.2	mA	VDDIO=5.0V
NVM_15	IDD_{ERASE}	Supply Current during Erasing of a row		—	—	2.2	mA	VDDIO=5.0V

Note:

1. Maximum FLASH operating frequencies are given in the table above, but are limited by the Embedded Flash access time when the processor is fetching code out of it. Theses tables provide the device maximum operating frequency defined by the field RWS of the NVMCTRL CTRLA register. This field defines the number of Wait states required to access the Embedded Flash Memory.

43.29 Position Decoder (PDEC) Electrical Specifications

Table 43-42. Position Decoder Interface AC Electrical Specifications

AC CHARACTERISTICS			Standard Operating Conditions: VDD and VDDIO 2.7V to 5.5V (unless otherwise stated) Operating temperature: -40°C ≤ TA ≤ +85°C for Industrial				
Param. No.	Symbol	Characteristics	Min.	Typ	Max.	Units	Conditions
PDEC_1	TtPH	TPCK high time	21	—	—	ns	VDDIO 2.7V to 5.5V
PDEC_3	TtPL	TPCK low time	21	—	—	ns	
PDEC_5	TtPP	TPCK input period	42	—	—	ns	
PDEC_7	TCKEXTDLY	Delay from External TxCK Clock Edge to counter Increment	—	—	4/f_{GCLK_PDEC}	ns	
PDEC_11	TPDH	Position Decoder Input High Time	2/f_{GCLK_PDEC}	—	—	ns	
PDEC_13	TPDL	Position Decoder Input Low Time	2/f_{GCLK_PDEC}	—	—	ns	
PDEC_15	TPDIN	Position Decoder Input Period	4/f_{GCLK_PDEC}	—	—	ns	
PDEC_21	TPDFH	Filter Time to Recognize High, with Digital Filter	4/f_{GCLK_PDEC}	—	—	ns	
PDEC_23	TPDFL	Filter Time to Recognize Low, with Digital Filter	4/f_{GCLK_PDEC}	—	—	ns	
PDEC_24	PDECCLK	GCLK_PDEC	—	—	FCLK_29	MHz	VDDIO 2.7V to 5.5V. See parameter FCLK_29 in Maximum Clock Frequency table

44. Packaging Information

44.1 Package Marking Information

All devices are marked with the Microchip logo and the ordering code.

- "XXXXXX": Part Number (row 1)
- "XXXXXXX": Part Number (row 2)
- "YYWWNNN": Trace Code



Where:

- "Y" or "YY": Manufacturing Year (last OR two last digit(s))
- "WW": Manufacturing Week
- "NNN": Internal Code

44.2 Package Drawings

Note: For current package drawings, refer to the Microchip Packaging Specification, which is available at http://www.microchip.com/packaging.

44.2.1 48-Pin TQFP

48-Lead Plastic Thin Quad Flatpack (Y8X) - 7x7x1.0 mm Body [TQFP]

Note:	For the most current package drawings, please see the Microchip Packaging Specification located at http://www.microchip.com/packaging

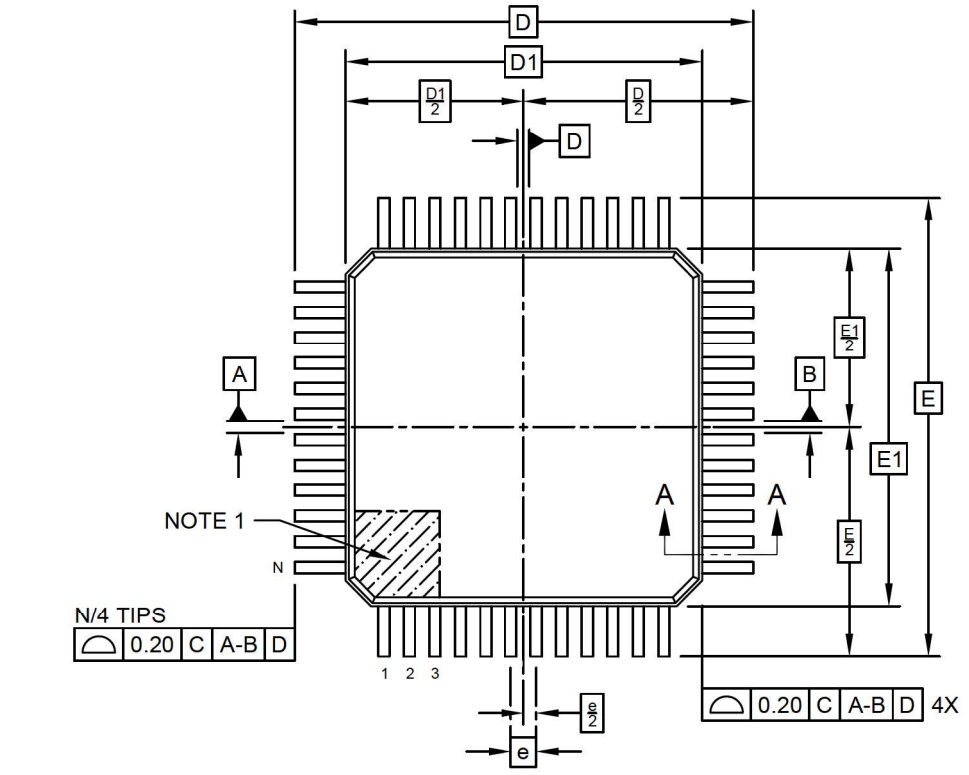

TOP VIEW

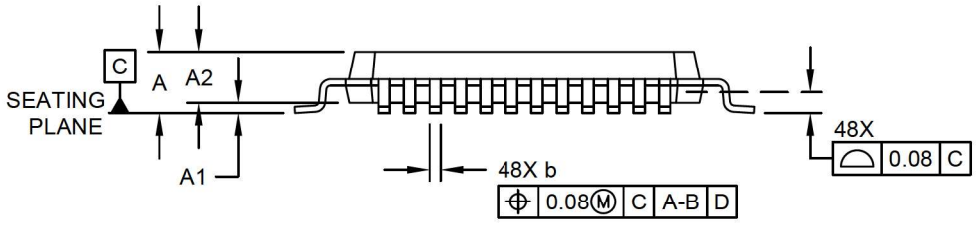

SIDE VIEW

Microchip Technology Drawing C04-300-Y8X Rev D Sheet 1 of 2

48-Lead Plastic Thin Quad Flatpack (Y8X) - 7x7x1.0 mm Body [TQFP]

Note: For the most current package drawings, please see the Microchip Packaging Specification located at http://www.microchip.com/packaging

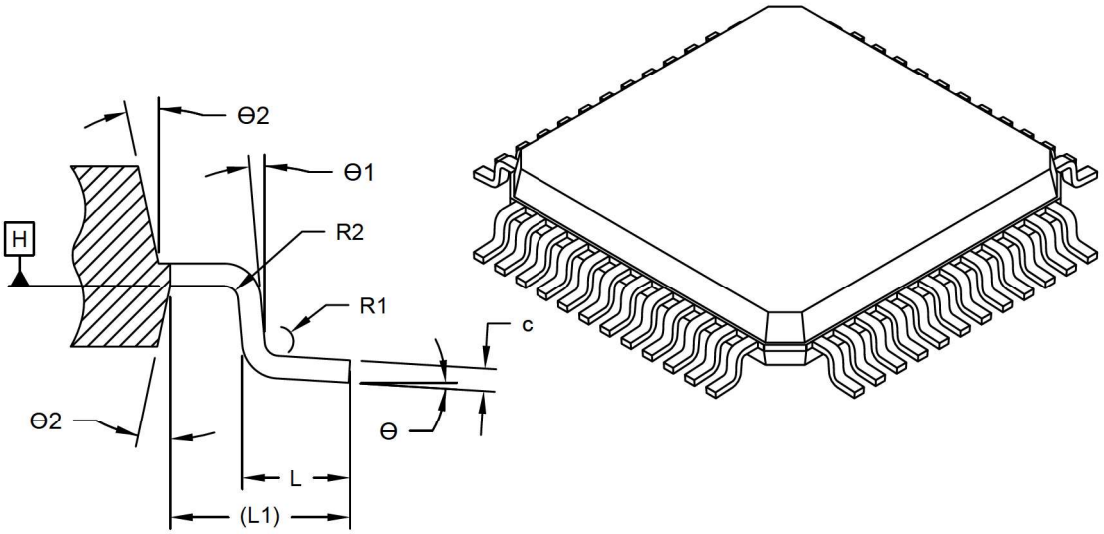

SECTION A-A

Units		MILLIMETERS		
Dimension Limits		MIN	NOM	MAX
Number of Terminals	N		48	
Pitch	e		0.50 BSC	
Overall Height	A	-	-	1.20
Standoff	A1	0.05	-	0.15
Molded Package Thickness	A2	0.95	1.00	1.05
Overall Length	D		9.00 BSC	
Molded Package Length	D1		7.00 BSC	
Overall Width	E		9.00 BSC	
Molded Package Width	E1		7.00 BSC	
Terminal Width	b	0.17	0.22	0.27
Terminal Thickness	c	0.09	-	0.16
Terminal Length	L	0.45	0.60	0.75
Footprint	L1		1.00 REF	
Lead Bend Radius	R1	0.08	-	-
Lead Bend Radius	R2	0.08	-	0.20
Foot Angle	Θ	0°	3.5°	7°
Lead Angle	Θ1	0°	-	-
Mold Draft Angle	Θ2	11°	12°	13°

Notes:

1. Pin 1 visual index feature may vary, but must be located within the hatched area.
2. Dimensioning and tolerancing per ASME Y14.5M
   BSC: Basic Dimension. Theoretically exact value shown without tolerances.
   REF: Reference Dimension, usually without tolerance, for information purposes only.

Microchip Technology Drawing C04-300-Y8X Rev D Sheet 2 of 2

48-Lead Plastic Thin Quad Flatpack (Y8X) - 7x7x1.0 mm Body [TQFP]

Note: For the most current package drawings, please see the Microchip Packaging Specification located at http://www.microchip.com/packaging

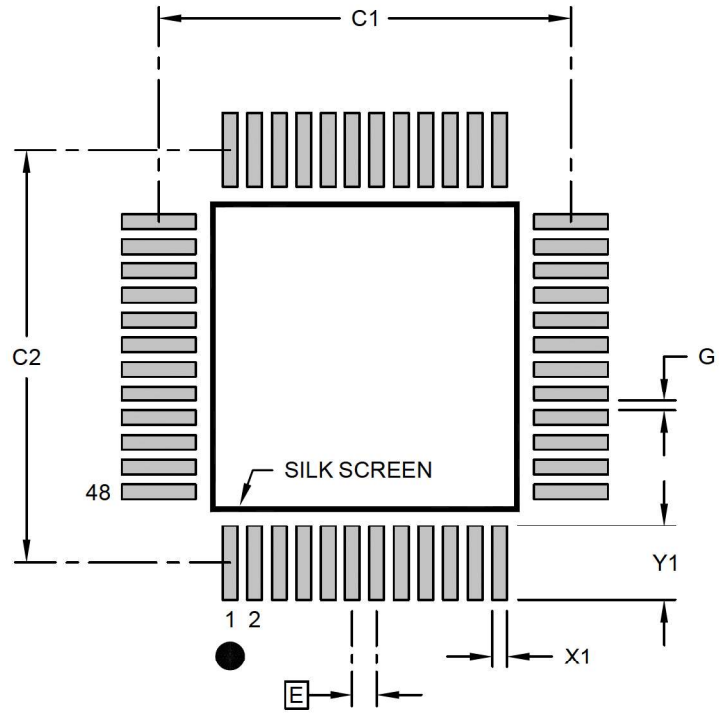

RECOMMENDED LAND PATTERN

Units		MILLIMETERS		
Dimension Limits		MIN	NOM	MAX
Contact Pitch	E		0.50 BSC	
Contact Pad Spacing	C1		8.40	
Contact Pad Spacing	C2		8.40	
Contact Pad Width (X48)	X1			0.30
Contact Pad Length (X48)	Y1			1.50
Distance Between Pads	G	0.20		

Notes:

1. Dimensioning and tolerancing per ASME Y14.5M
   BSC: Basic Dimension. Theoretically exact value shown without tolerances.
2. For best soldering results, thermal vias, if used, should be filled or tented to avoid solder loss during reflow process

Microchip Technology Drawing C04-2300-Y8X Rev D

Table 44-1. Device and Package Maximum Weight

140	mg

Table 44-2. Package Reference

Package Outline Drawing MCHP reference	C04-00300
JESD97 Classification	E3

44.2.2 48-Pin VQFN

48-Lead Very Thin Plastic Quad Flat, No Lead Package (U5B) - 7x7 mm Body [VQFN] With 5.15 mm Exposed Pad and Stepped Wettable Flanks; Atmel Legacy ZLH

Note:	For the most current package drawings, please see the Microchip Packaging Specification located at http://www.microchip.com/packaging

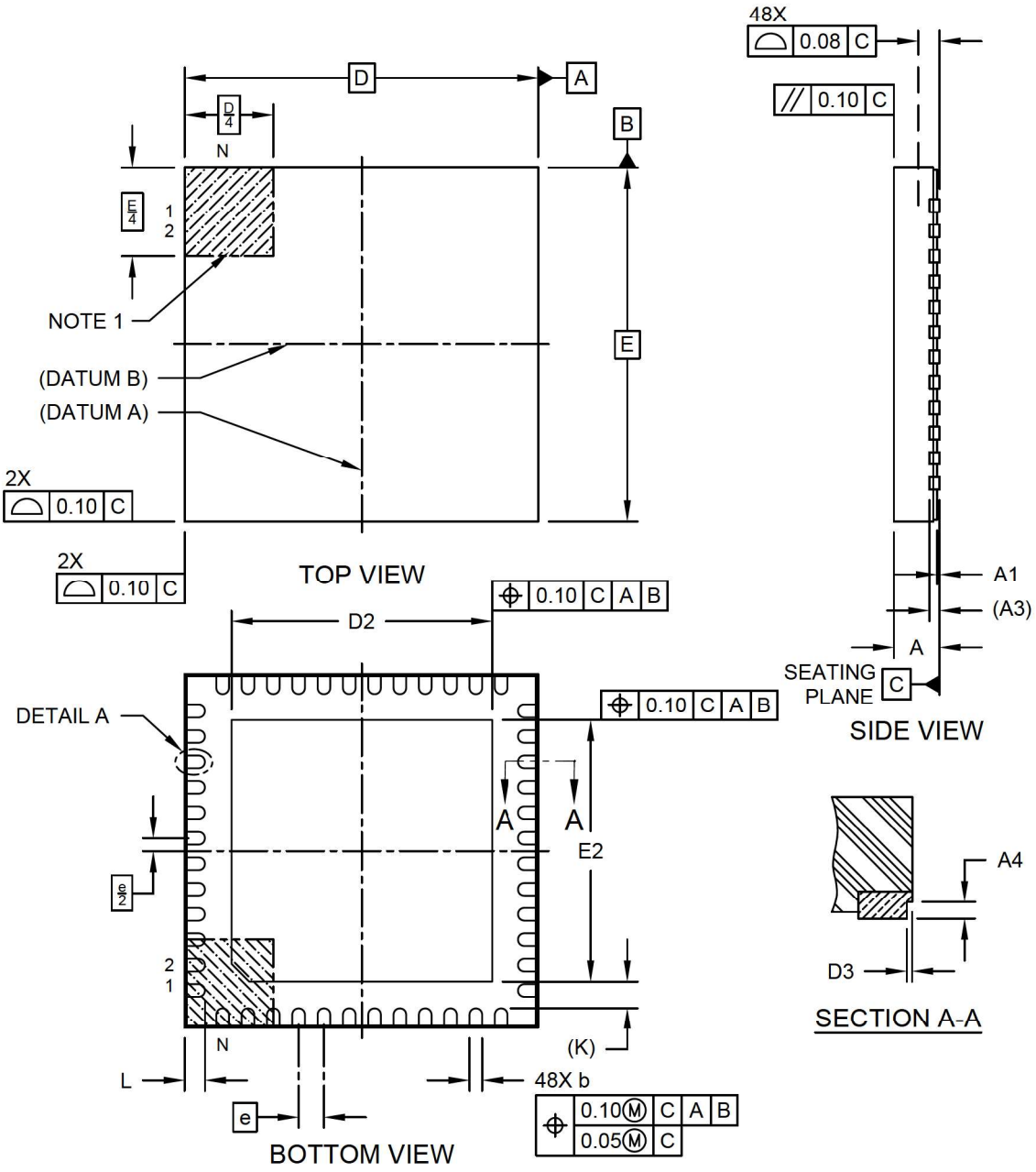

Microchip Technology Drawing C04-21493 Rev A Sheet 1 of 2

48-Lead Very Thin Plastic Quad Flat, No Lead Package (U5B) - 7x7 mm Body [VQFN] With 5.15 mm Exposed Pad and Stepped Wettable Flanks; Atmel Legacy ZLH

Note: For the most current package drawings, please see the Microchip Packaging Specification located at http://www.microchip.com/packaging

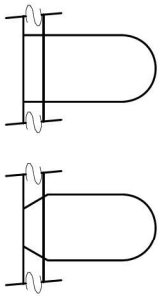

DETAIL 1
ALTERNATE TERMINAL CONFIGURATIONS

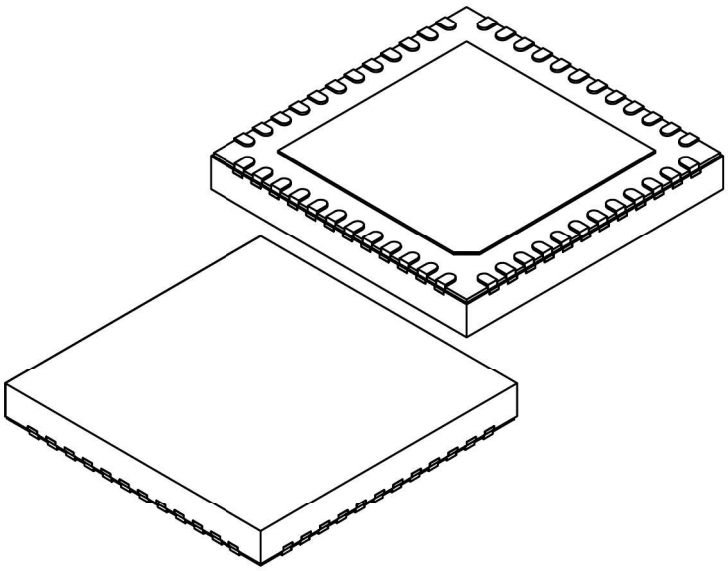

Units		MILLIMETERS		
Dimension Limits		MIN	NOM	MAX
Number of Terminals	N		48	
Pitch	e		0.50 BSC	
Overall Height	A	0,80	0.85	0.90
Standoff	A1	0.00	0.02	0.05
Terminal Thickness	A3		0.203 REF	
Overall Length	D		7.00 BSC	
Exposed Pad Length	D2	5.05	5.15	5.25
Overall Width	E		7.00 BSC	
Exposed Pad Width	E2	5.05	5.15	5.25
Terminal Width	b	0.20	0.25	0.30
Terminal Length	L	0.35	0.40	0.45
Terminal-to-Exposed-Pad	K		0.53 REF	
Wettable Flank Step Length	D3	-	-	0.085
Wettable Flank Step Height	A4	0.10	-	0.19

Notes:

1. Pin 1 visual index feature may vary, but must be located within the hatched area.
2. Package is saw singulated
3. Dimensioning and tolerancing per ASME Y14.5M
   BSC: Basic Dimension. Theoretically exact value shown without tolerances.
   REF: Reference Dimension, usually without tolerance, for information purposes only.

Microchip Technology Drawing C04-21493 Rev A Sheet 2 of 2

48-Lead Very Thin Plastic Quad Flat, No Lead Package (U5B) - 7x7 mm Body [VQFN] With 5.15 mm Exposed Pad and Stepped Wettable Flanks; Atmel Legacy ZLH

Note: For the most current package drawings, please see the Microchip Packaging Specification located at http://www.microchip.com/packaging

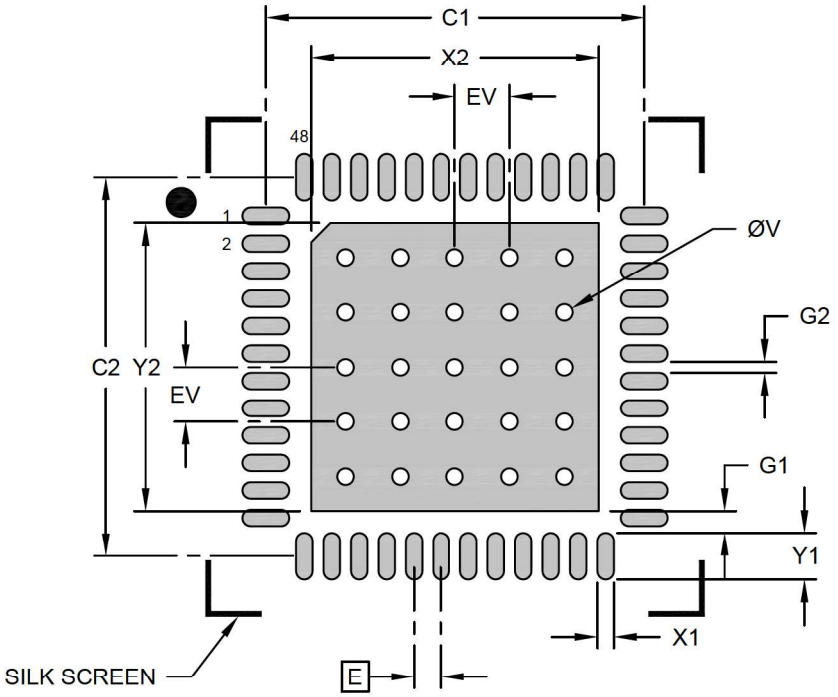

RECOMMENDED LAND PATTERN

Units		MILLIMETERS		
Dimension Limits		MIN	NOM	MAX
Contact Pitch	E		0.50 BSC	
Optional Center Pad Width	X2			5.25
Optional Center Pad Length	Y2			5.25
Contact Pad Spacing	C1		6.90	
Contact Pad Spacing	C2		6.90	
Contact Pad Width (X48)	X1			0.30
Contact Pad Length (X48)	Y1			0.85
Contact Pad to Center Pad (X48)	G1	0.20		
Contact Pad to Center Pad (X44)	G2	0.40		
Thermal Via Diameter	V		0.30	
Thermal Via Pitch	EV		1.00	

Notes:

1. Dimensioning and tolerancing per ASME Y14.5M
   BSC: Basic Dimension. Theoretically exact value shown without tolerances.
2. For best soldering results, thermal vias, if used, should be filled or tented to avoid solder loss during reflow process

Microchip Technology Drawing C04-23493 Rev A

Note: The exposed die attach pad is not connected electrically inside the device.

Table 44-3. Device and Package Maximum Weight

140	mg

Table 44-4. Package Reference

Package Outline Drawing MCHP reference	C04-21493
JESD97 Classification	E3

44.2.3 32-Pin TQFP

32-Lead Plastic Thin Quad Flatpack (PT) - 7x7x1.0 mm Body [TQFP]
2.00 mm Footprint; Also Atmel Legacy Global Package Code AUT

Note:	For the most current package drawings, please see the Microchip Packaging Specification located at http://www.microchip.com/packaging

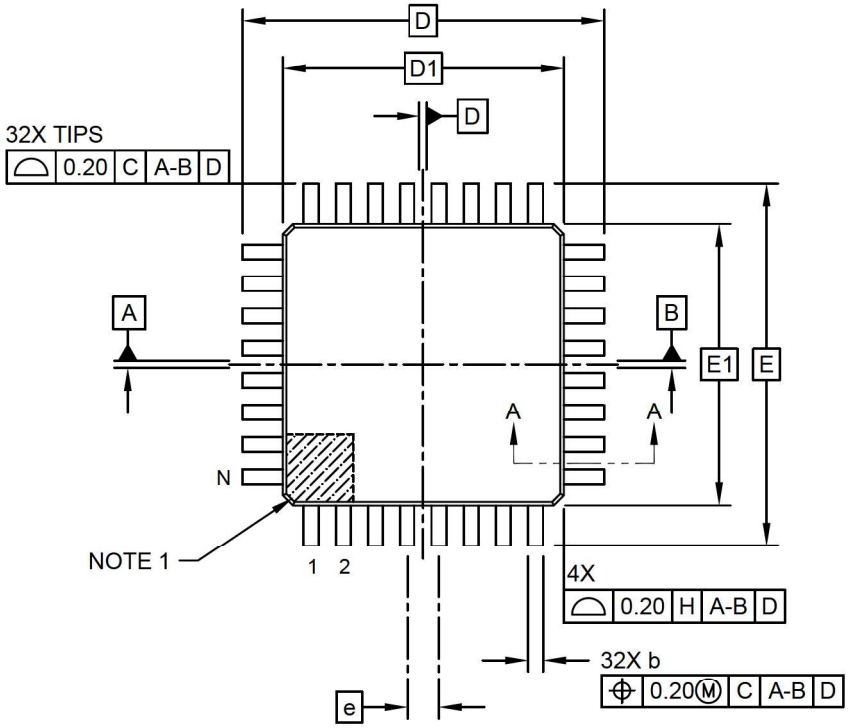

TOP VIEW

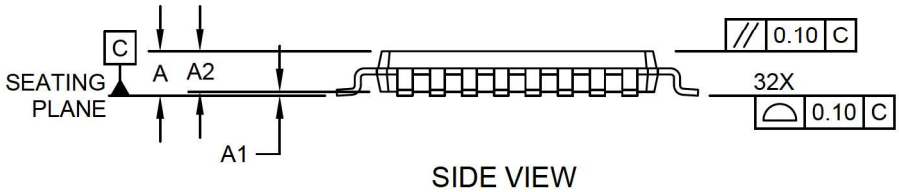

SIDE VIEW

Microchip Technology Drawing C04-074 Rev C Sheet 1 of 2

32-Lead Plastic Thin Quad Flatpack (PT) - 7x7x1.0 mm Body [TQFP]
2.00 mm Footprint; Also Atmel Legacy Global Package Code AUT

Note: For the most current package drawings, please see the Microchip Packaging Specification located at http://www.microchip.com/packaging

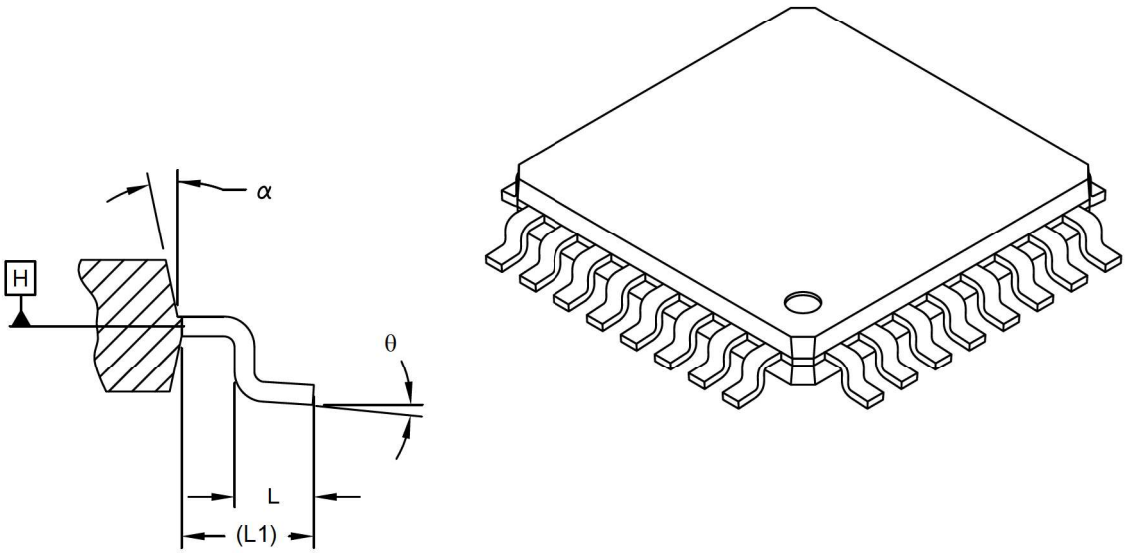

SECTION A-A

Units		MILLIMETERS		
Dimension Limits		MIN	NOM	MAX
Number of Leads	N		32	
Lead Pitch	e		0.80 BSC	
Overall Height	A	-	-	1.20
Standoff	A1	0.05	-	0.15
Molded Package Thickness	A2	0.95	1.00	1.05
Foot Length	L	0.45	0.60	0.75
Footprint	L1		1.00 REF	
Foot Angle	θ	0°	-	7°
Overall Width	E		9.00 BSC	
Overall Length	D		9.00 BSC	
Molded Package Width	E1		7.00 BSC	
Molded Package Length	D1		7.00 BSC	
Lead Width	b	0.30	0.37	0.45
Mold Draft Angle Top	α	11°	-	13°

Notes:

1. Pin 1 visual index feature may vary, but must be located within the hatched area.
2. Dimensioning and tolerancing per ASME Y14.5M

   BSC: Basic Dimension. Theoretically exact value shown without tolerances.

   REF: Reference Dimension, usually without tolerance, for information purposes only.

Microchip Technology Drawing C04-074 Rev C Sheet 2 of 2

32-Lead Thin Plastic Quad Flatpack (PT) - 7x7 mm Body [TQFP]
2.00 mm Footprint; Also Atmel Legacy Global Package Code AUT

Note: For the most current package drawings, please see the Microchip Packaging Specification located at http://www.microchip.com/packaging

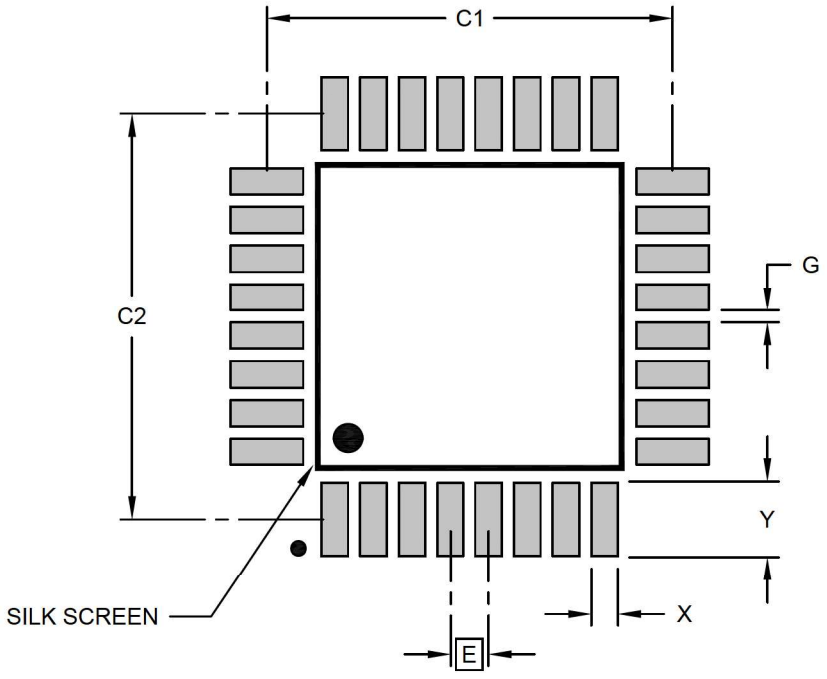

RECOMMENDED LAND PATTERN

Units		MILLIMETERS		
Dimension Limits		MIN	NOM	MAX
Contact Pitch	E	0.80 BSC		
Contact Pad Spacing	C1		8.40	
Contact Pad Spacing	C2		8.40	
Contact Pad Width (Xnn)	X			0.55
Contact Pad Length (Xnn)	Y			1.55
Contact Pad to Contact Pad (Xnn)	G	0.25		

Notes:

1. Dimensioning and tolerancing per ASME Y14.5M
   BSC: Basic Dimension. Theoretically exact value shown without tolerances.

Microchip Technology Drawing C04-2074 Rev C

Table 44-5. Device and Package Maximum Weight

100	mg

Table 44-6. Package Reference

Package Outline Drawing MCHP reference	C04-00074
JESD97 Classification	E3

44.2.4 32-pin VQFN

32-Lead Very Thin Plastic Quad Flat, No Lead Package (RTB) - 5x5 mm Body [VQFN] With 3.6x3.6 mm Exposed Pad and Stepped Wettable Flanks; Atmel Legacy ZBS

Note: For the most current package drawings, please see the Microchip Packaging Specification located at http://www.microchip.com/packaging

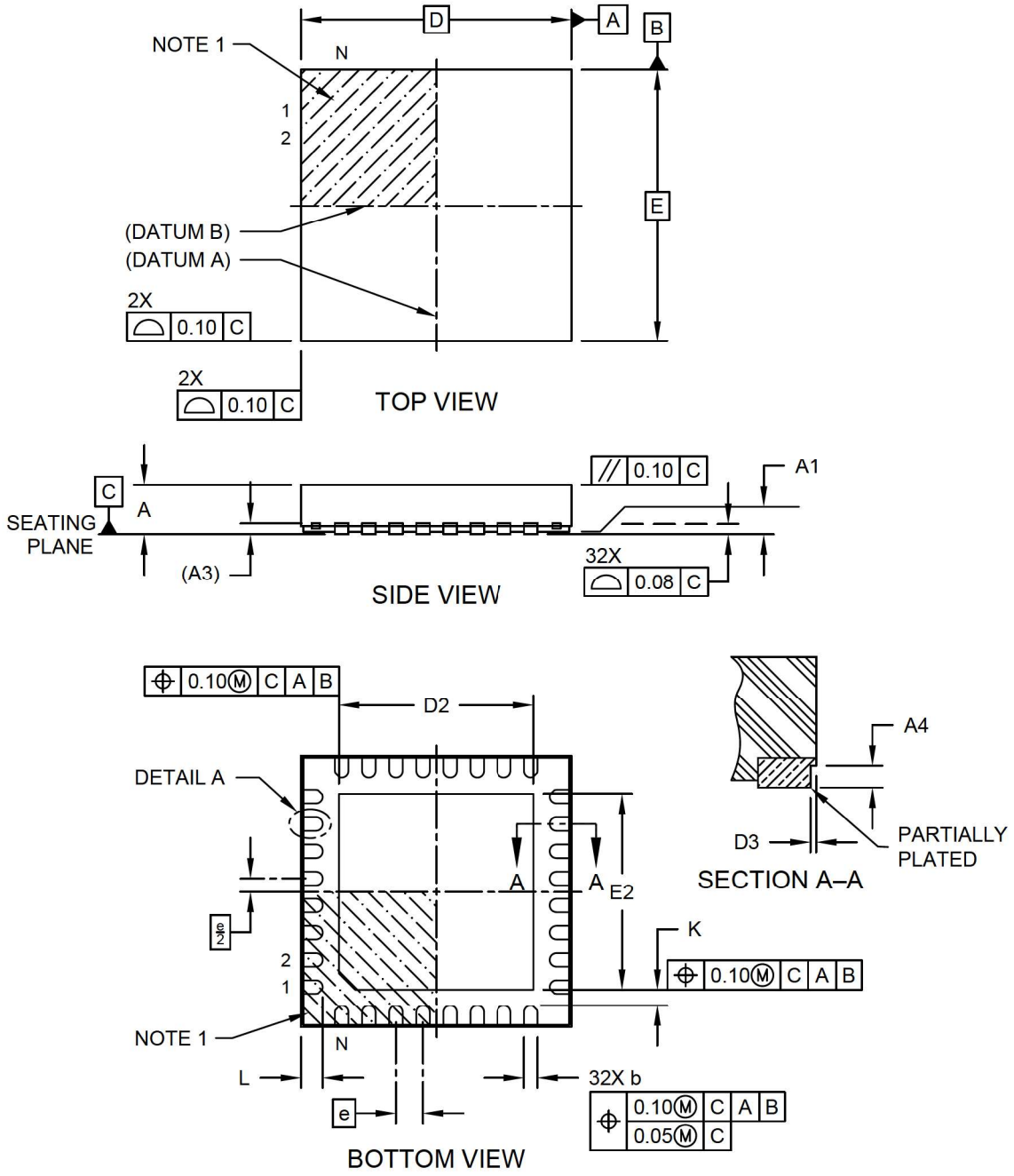

Microchip Technology Drawing C04-21391 RevE Sheet 1 of 2

32-Lead Very Thin Plastic Quad Flat, No Lead Package (RTB) - 5x5 mm Body [VQFN] With 3.6x3.6 mm Exposed Pad and Stepped Wettable Flanks; Atmel Legacy ZBS

Note: For the most current package drawings, please see the Microchip Packaging Specification located at http://www.microchip.com/packaging

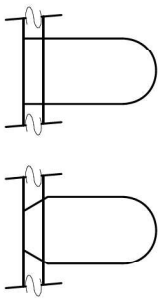

DETAIL 1
ALTERNATE TERMINAL CONFIGURATIONS

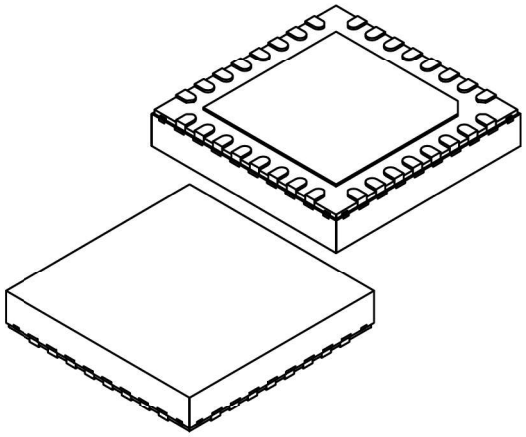

Units		MILLIMETERS		
Dimension Limits		MIN	NOM	MAX
Number of Terminals	N		32	
Pitch	e		0.50 BSC	
Overall Height	A	0.80	0.90	1.00
Standoff	A1	0.00	0.035	0.05
Terminal Thickness	A3		0.203 REF	
Overall Length	D		5.00 BSC	
Exposed Pad Length	D2	3.50	3.60	3.70
Overall Width	E		5.00 BSC	
Exposed Pad Width	E2	3.50	3.60	3.70
Terminal Width	b	0.20	0.25	0.30
Terminal Length	L	0.35	0.40	0.45
Terminal-to-Exposed-Pad	K	0.20	-	-
Wettable Flank Step Cut Width	D3	-	-	0.085
Wettable Flank Step Cut Depth	A4	0.10	-	0.19

Dimensions D3 and A4 above apply to all new products released after November 1, and all products shipped after January 1, 2019, and supersede dimensions D3 and A4 below.
No physical changes are being made to any package; this update is to align cosmetic and tolerance variations from existing suppliers.

Wettable Flank Step Length	D3	0.035	0.06	0.085
Wettable Flank Step Height	A4	0.10	-	0.19

Notes:

1. Pin 1 visual index feature may vary, but must be located within the hatched area.
2. Package is saw singulated
3. Dimensioning and tolerancing per ASME Y14.5M

   BSC: Basic Dimension. Theoretically exact value shown without tolerances.
   REF: Reference Dimension, usually without tolerance, for information purposes only.

Microchip Technology Drawing C04-21391 Rev E Sheet 2 of 2

32-Lead Very Thin Plastic Quad Flat, No Lead Package (RTB) - 5x5 mm Body [VQFN] With 3.6x3.6 mm Exposed Pad and Stepped Wettable Flanks; Atmel Legacy ZBS

Note: For the most current package drawings, please see the Microchip Packaging Specification located at http://www.microchip.com/packaging

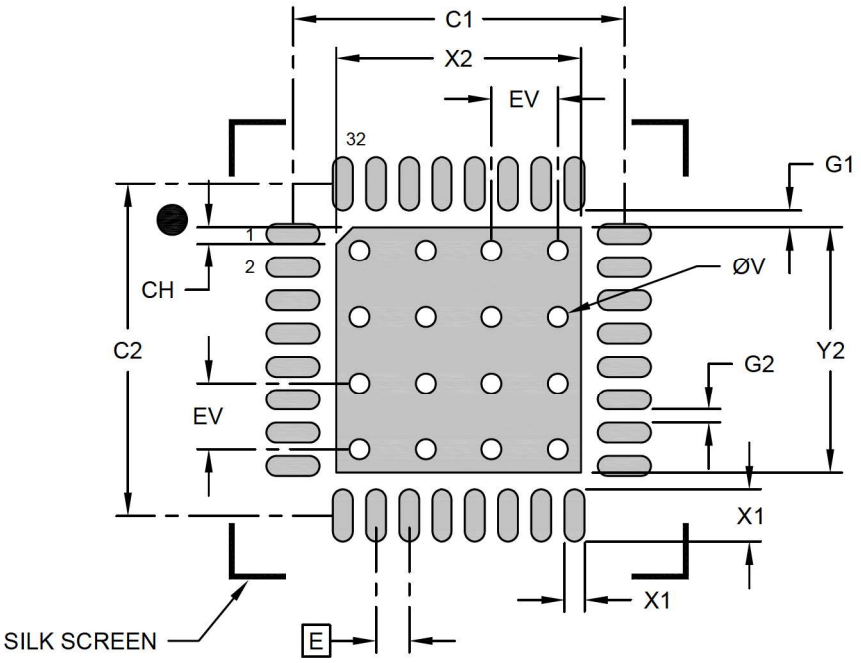

RECOMMENDED LAND PATTERN

Units		MILLIMETERS		
Dimension Limits		MIN	NOM	MAX
Contact Pitch	E		0.50 BSC	
Optional Center Pad Width	X2			3.70
Optional Center Pad Length	Y2			3.70
Exposed Pad 45° Corner Chamfer	CH		0.25	
Contact Pad Spacing	C1		5.00	
Contact Pad Spacing	C2		5.00	
Contact Pad Width (X32)	X1			0.30
Contact Pad Length (X32)	Y1			0.80
Contact Pad to Center Pad (X32)	G1	0.25		
Contact Pad to Contact Pad (X28)	G2	0.20		
Thermal Via Diameter	V		0.30	
Thermal Via Pitch	EV		1.00	

Notes:

1. Dimensioning and tolerancing per ASME Y14.5M
   BSC: Basic Dimension. Theoretically exact value shown without tolerances.
2. For best soldering results, thermal vias, if used, should be filled or tented to avoid solder loss during reflow process

Microchip Technology Drawing C04-23391 Rev. E

Table 44-7. Device and Package Maximum Weight

100	mg

Table 44-8. Package Reference

Package Outline Drawing MCHP reference	C04-21391
JESD97 Classification	E3

44.3 Soldering Profile

The following table gives the recommended soldering profile from J-STD-20.

Table 44-9. Recommended Soldering Profile

Profile Feature	Green Package
Average Ramp-up Rate (217°C to peak)	3°C/s max.
Preheat Temperature 175°C ±25°C	150-200°C
Time Maintained Above 217°C	60-150s
Time within 5°C of Actual Peak Temperature	30s
Peak Temperature Range	260°C
Ramp-down Rate	6°C/s max.
Time 25°C to Peak Temperature	8 minutes max.

A maximum of three reflow passes is allowed per component.

45. Schematic Checklist

45.1 Introduction

This chapter describes a common checklist which should be used when starting and reviewing the schematics for a PIC32CM MC design. This chapter illustrates the recommended power supply connections, how to connect external analog references, programmer, debugger, oscillator and crystal.

45.2 Operation in Noisy Environment

If the device is operating in an environment with much electromagnetic noise it must be protected from this noise to ensure reliable operation. In addition to following best practice EMC design guidelines, the recommendations listed in the schematic checklist sections must be followed. In particular placing decoupling capacitors very close to the power pins, a RC-filter on the $\overline{\text{RESET}}$ pin, and a pull-up resistor on the SWCLK pin is critical for reliable operations. It is also relevant to eliminate or attenuate noise in order to avoid that it reaches supply pins, I/O pins and crystals.

45.3 Power Supply

This device supports a single power supply or dual power supplies from 2.7 to 5.5V.

45.3.1 Power Supply Connections

Figure 45-1. Single Power Supply Schematic

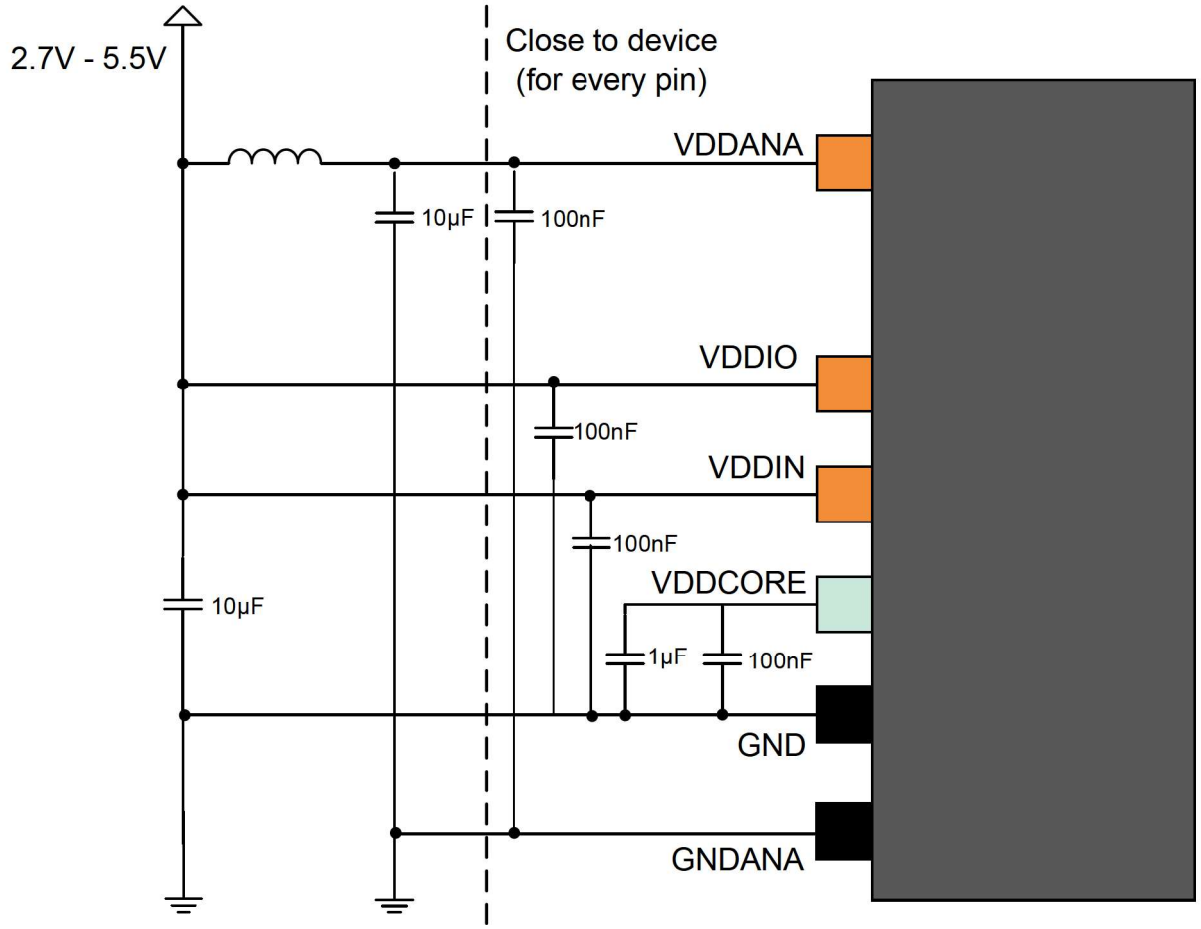

Figure 45-2. Dual Power Supply Schematic

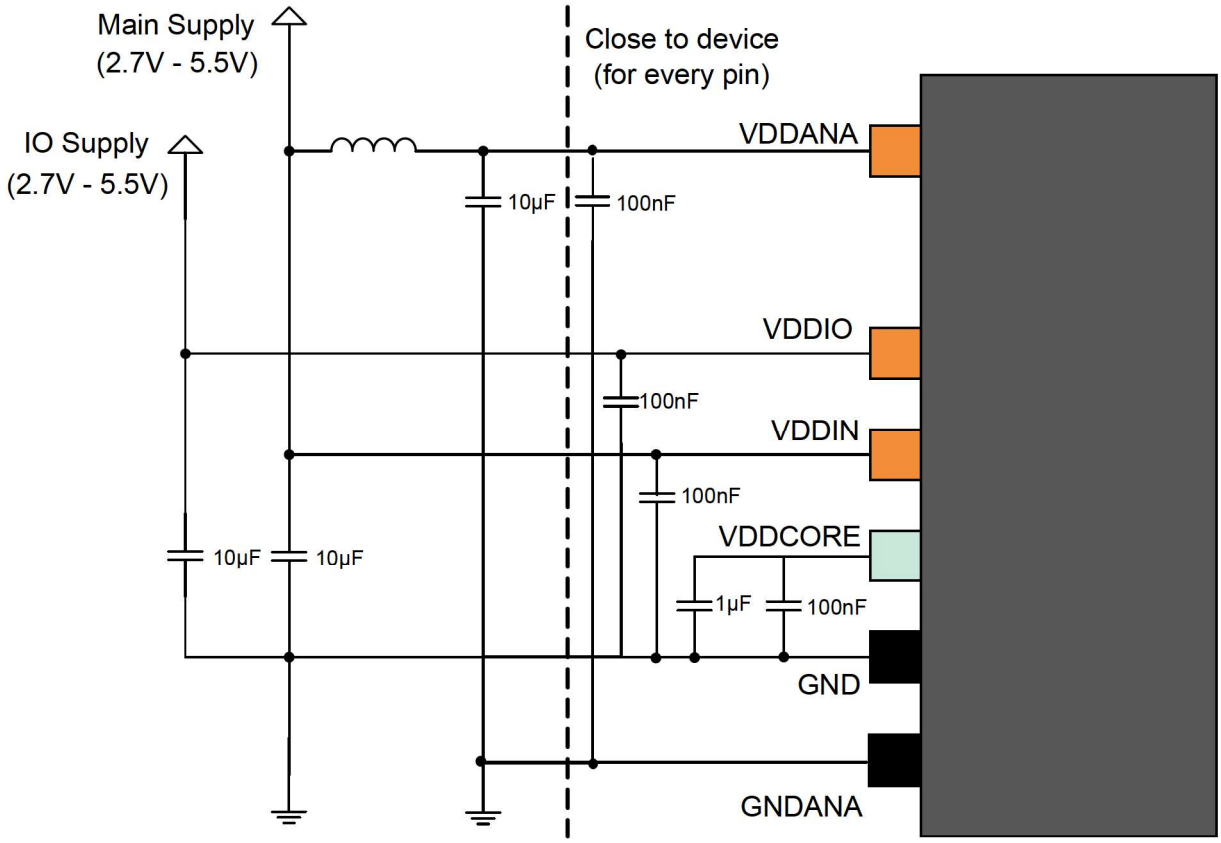

Table 45-1. Power Supply Connections, V_{DDCORE} From Internal Regulator

Signal Name	Recommended Pin Connection	Description
V_{DDIO}	2.7V to 5.5V Decoupling/filtering capacitors 100nF(1)(2) and 10µF(1) Decoupling/filtering inductor 10µH(1)(3)	I/O supply voltage
V_{DDANA}	2.7V to 5.5V Decoupling/filtering capacitors 100nF(1)(2) and 10µF(1) Ferrite bead(4) prevents the V_{DD} noise interfering with V_{DDANA}	Analog supply voltage
V_{DDIN}	2.7V to 5.5V Decoupling/filtering capacitors 100nF(1)(2) and 10µF(1) Decoupling/filtering inductor 10µH(1)(3)	Digital supply voltage
V_{DDCORE}	1.1V to 1.3V typical Decoupling/filtering capacitors 100nF(1)(2)and 1µF(1)	Core supply voltage / external decoupling pin
GND		Ground
GND_{ANA}		Ground for the analog power domain

1. These values are only given as a typical example.

2. Decoupling capacitors should be placed close to the device for each supply pin pair in the signal group, low ESR capacitors should be used for better decoupling.

3. An inductor should be added between the external power and the V_{DD} for power filtering.

4. A ferrite bead has better filtering performance compared to standard inductor at high frequencies. A ferrite bead can be added between the main power supply (V_{DD}) and V_{DDANA} to prevent digital noise from entering the analog power domain. The bead should provide enough impedance (e.g. 50Ω at 20MHz and 220Ω at 100MHz) to separate the digital and analog power domains. Make sure to select a ferrite bead designed for filtering applications with a low DC resistance to avoid a large voltage drop across the ferrite bead.

45.4 External Analog Reference Connections

The following schematic checklist is only necessary if the application is using the external analog reference. If the internal reference is used instead, the following circuits are not necessary.

Figure 45-3. External Analog Reference Schematic With Two References

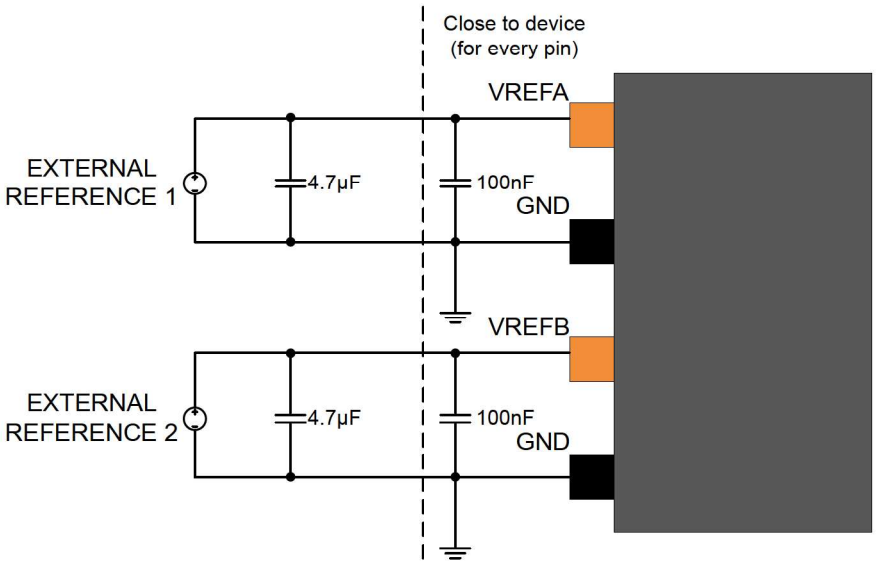

Figure 45-4. External Analog Reference Schematic With One Reference

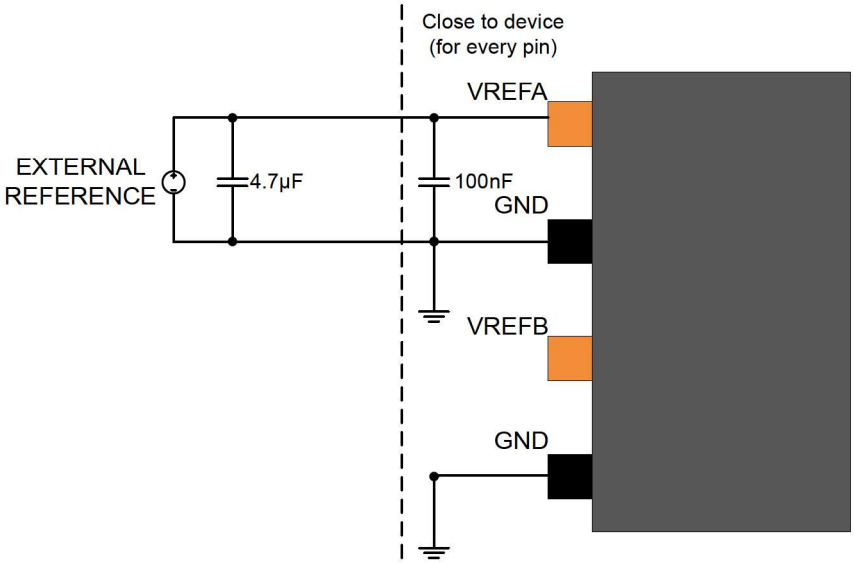

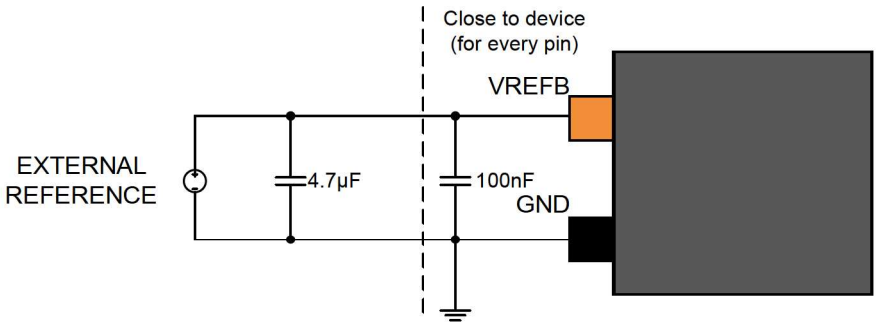

Table 45-2. External Analog Reference Connections

Signal Name	Recommended Pin Connection	Description
VREFx	2.4V to V_{DDANA} - 0.6V for ADC (2) 2.4V to V_{DDANA} - 0.6V for DAC (2) Decoupling/filtering capacitors: 100nF(1,2,3) and 4.7µF(1)	External reference from VREFx pin on the analog port.
GND		Ground

Notes:

1. Refer to Power Supply Electrical Specifications from the Electrical Characteristics chapter.
2. Refer to the *Electrical Characteristics* chapter for the intended peripheral to be used with VREFx to determine suggested operational conditions. These peripherals include ADC, DAC, AC, and SDADC.
3. Decoupling capacitor must be placed close to the device for each supply pin pair in the signal group.

45.5 External Reset Circuit

The external Reset circuit is connected to the $\overline{\text{RESET}}$ pin when the external Reset function is used. The circuit is not necessary when the $\overline{\text{RESET}}$ pin is not driven LOW externally by the application circuitry.

The reset switch can also be removed, if a manual reset is not desired. The $\overline{\text{RESET}}$ pin itself has an internal pull-up resistor, therefore it is optional to add any external pull-up resistor.

A pull-up resistor makes sure that the reset does not go low and unintentionally causing a device reset. An additional resistor has been added in series with the switch to safely discharge the filtering capacitor, that is preventing a current surge when shorting the filtering capacitor which again can cause a noise spike that can have a negative effect on the system.

Figure 45-5. External Reset Circuit Schematic (General Purpose)(2)

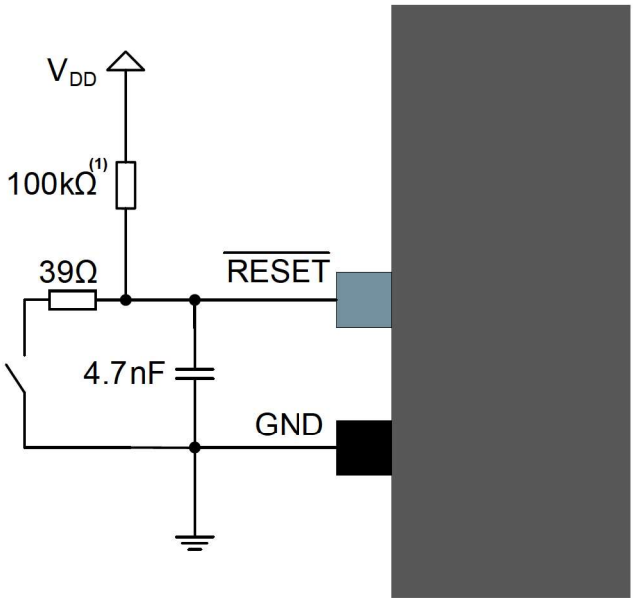

The following reset circuit is intended to improve EFT immunity but does not filter low frequency glitches which makes it unsuitable as an example for applications requiring debouncing on a reset button.

Figure 45-6. External Reset Circuit Schematic (EFT Immunity Enhancement) (2)

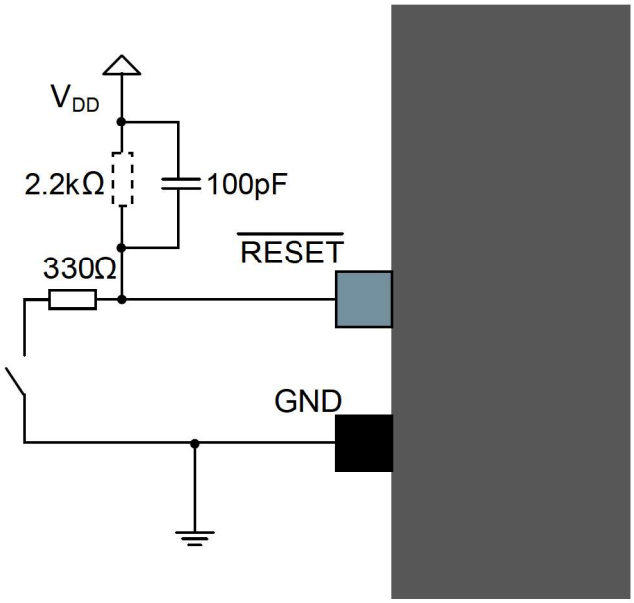

Notes:

1. The device features an internal pull-up resistor on the $\overline{\text{RESET}}$ pin; therefore, an external pull-up is optional.
2. These values are only given as a typical example. Reference the Power Supply Electrical Characteristics to determine proper values given system parameters to meet reset timing requirements (TRST).

45.6 Unused or Unconnected Pins

For unused pins, the default state of the pins will give the lowest current leakage. Therefore, no need to configure the unused pins to reduce the power consumption.

45.7 Clocks and Crystal Oscillators

The device can be run from internal or external clock sources, or a mix of internal and external sources. An example of usage will be to use the internal 48 MHz oscillator as source for the system clock, and an external 32.768 kHz crystal as clock source for the Real-Time counter (RTC).

45.7.1 External Clock Source

Figure 45-7. External Clock Source Schematic

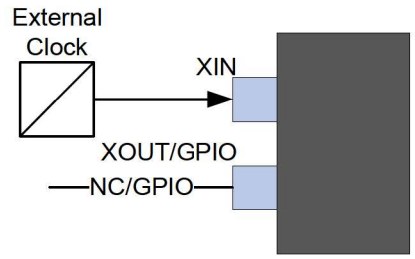

Table 45-3. External Clock Source Connections

Signal Name	Description	Recommended Pin Connection
XIN	Input for inverting oscillator pin External Clock frequency range specified in the XOSC Electrical Specifications (XOSC35 parameter)	Input for an external clock signal
XOUT/GPIO	Available for use as GPIO	NC/GPIO

45.7.2 Crystal Oscillator

Figure 45-8. Crystal Oscillator Schematic

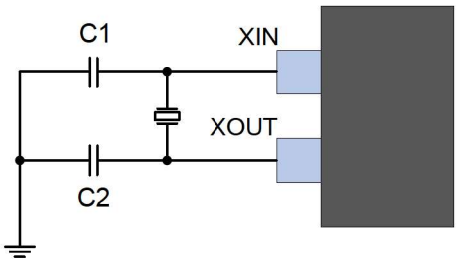

The crystal should be located as close to the device as possible. Long signal lines may cause too high of a load to operate the crystal, and cause crosstalk to other parts of the system.

Note: Crystal selection must be done using both the crystal data sheet and the crystal oscillator parameters given in the XOSC Electrical Specifications from Electrical Characteristics chapter.

Table 45-4. Crystal Oscillator Checklist

Signal Name	Description	Recommended Pin Connection
XIN	External Crystal Crystal frequency range specified in the XOSC Electrical Specifications (XOSC_1 parameter)	C1 Load Capacitor (1,2)
XOUT		C2 Load Capacitor (1,2)

Notes:

1. The capacitors should be placed close to the device.
2. Crystal Load Capacitors Calculation is given in the XOSC Electrical Specifications.

45.7.3 External Slow Clock Source

Figure 45-9. External Slow Clock Source Schematics

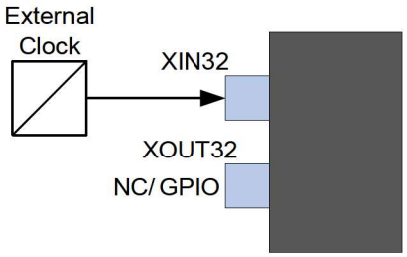

Table 45-5. External Slow Clock Source Connections

Signal Name	Description	Recommended Pin Connection
XIN32	Input for inverting oscillator pin External Clock frequency range specified in the XOSC32K Electrical Specifications (XOSC32K_19 parameter)	XIN32 is used as input for an external clock signal
XOUT32/GPIO	NC/GPIO	Available for use as a GPIO

45.7.4 32.768 kHz Crystal Oscillator

PIC32CM MC00 32.768 kHz crystal oscillator is optimized for very low-power consumption, hence close attention must be made when selecting crystals.

Figure 45-10. 32.768 kHz Crystal Oscillator Schematics

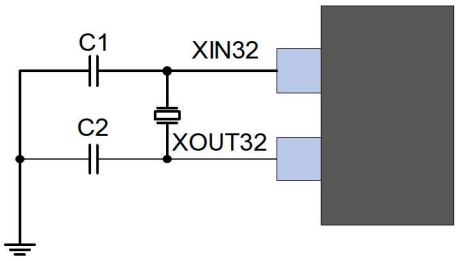

Note: 32.768 kHz crystal selection must be done using both the crystal data sheet and the crystal oscillator parameters given in the “XOSC32K Electrical Specifications” from the “Electrical Characteristics” chapter.

Table 45-6. 32.768 kHz Crystal Oscillator Checklist

Signal Name	Description	Recommended Pin Connection
XIN32	External Crystal Crystal frequency range specified in the XOSC32K Electrical Characteristics (XOSC32K_1 parameter)	C1 Load Capacitor (1,2)
XOUT32		C2 Load Capacitor (1,2)

Notes:

1. The capacitors must be placed close to the device.
2. Crystal Load Capacitors Calculation is given in the XOSC32K Electrical Characteristics.

45.8 Programming and Debug Ports

For programming and debugging the PIC32CM MC00, the device must be connected using the Serial Wire Debug (SWD) interface. Currently the SWD interface is supported by several Microchip and third party programmers and debuggers.

The PIC32CM MC00 Curiosity Pro evaluation board supports programming and debugging through the onboard embedded debugger, therefore external programmer or debugger is not required.

Refer to the related Microchip user's guides for details on debugging and programming connections and options. For connecting to any third party programming or debugging tool, refer to their specific programmer or debugger user's guide.

By default, the SWCLK pin is internally pulled-up after reset.

An external pull-up resistor on the SWCLK pin is critical for reliable operations.

Figure 45-11. SWCLK Circuit Connections

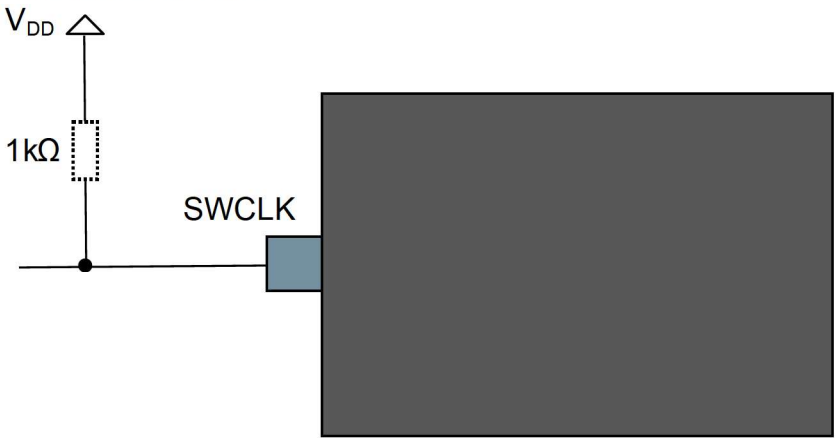

Table 45-7. SWCLK Circuit Connections

Pin Name	Description	Recommended Pin Connection
SWCLK	Serial wire clock pin	Pull-up resistor 1kΩ

45.8.1 Cortex Debug Connector (10-pin)

For debuggers and/or programmers that support the Cortex Debug Connector (10-pin) interface the signals should be connected as shown in Figure 45-12 with details described in Table 45-8.

Figure 45-12. Cortex Debug Connector (10-pin)

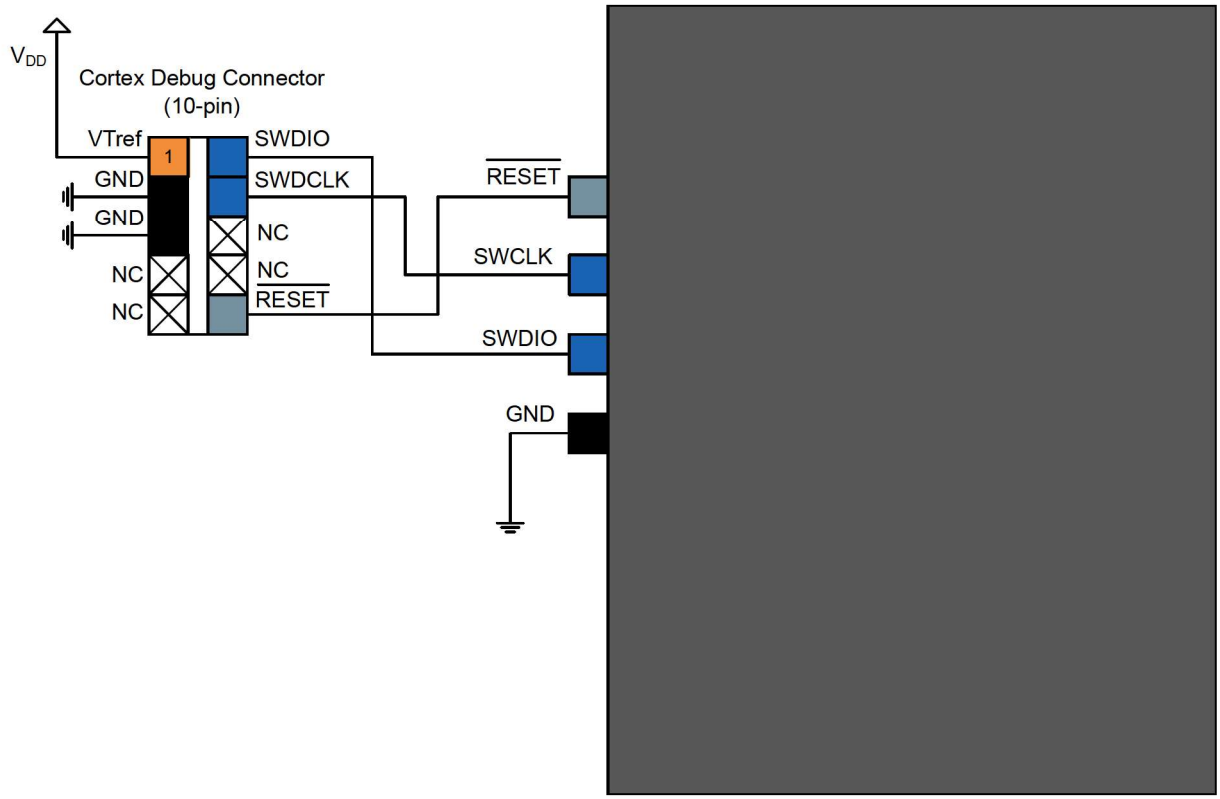

Table 45-8. Cortex Debug Connector (10-pin)

Header Signal Name	Description
SWDCLK	Serial wire clock pin
SWDIO	Serial wire bidirectional data pin
$\overline{\text{RESET}}$	Target device reset pin, active low
VTref	Target voltage sense, should be connected to the device V_{DD}
GND	Ground

45.8.2 20-pin IDC JTAG Connector

For debuggers and/or programmers that support the 20-pin IDC JTAG Connector, e.g. the SAM-ICE, the signals should be connected as shown in Figure 45-13 with details described in Table 45-9.

Figure 45-13. 20-pin IDC JTAG Connector

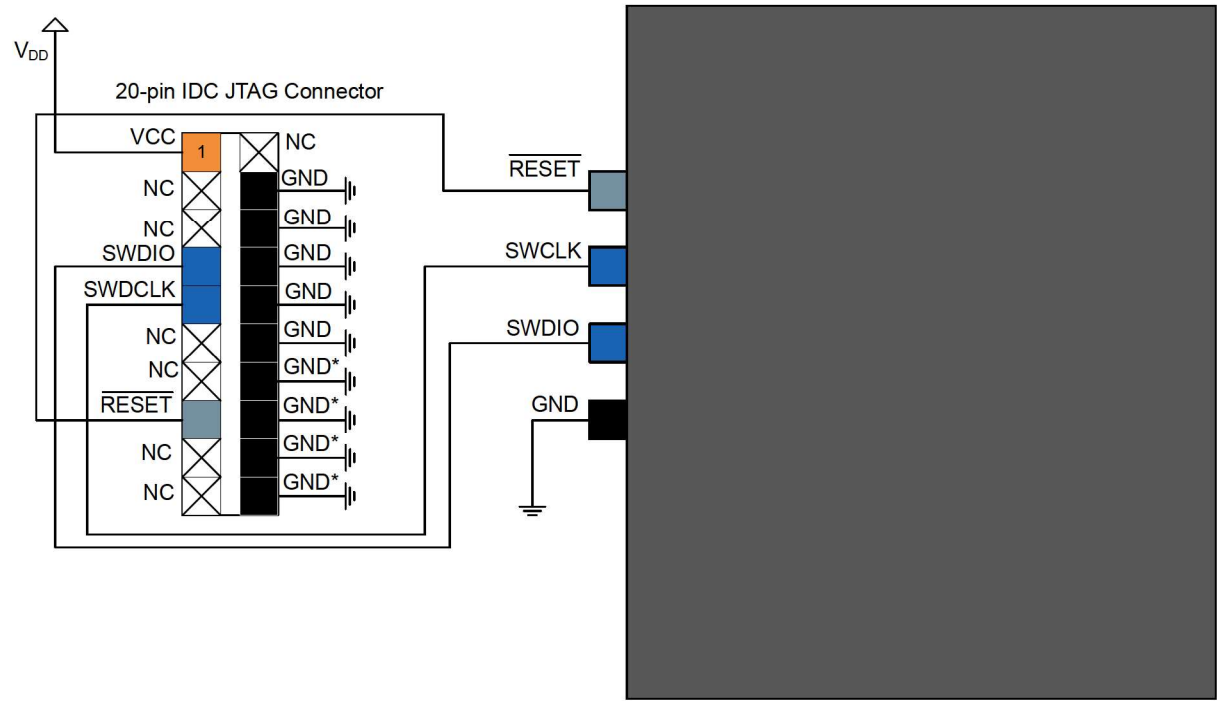

Table 45-9. 20-pin IDC JTAG Connector

Header Signal Name	Description
SWDCLK	Serial wire clock pin
SWDIO	Serial wire bidirectional data pin
$\overline{\text{RESET}}$	Target device reset pin, active low
VCC	Target voltage sense, should be connected to the device V_{DD}
GND	Ground
GND*	These pins are reserved for firmware extension purposes. They can be left unconnected or connected to GND in normal debug environment. They are not essential for SWD in general.

46. Revision History

Revision B - November 2020
This revision contains numerous typographical updates throughout the document. All other updates are listed in the following table:

Section	Updates
Pinout	• Updated the 32-pin VQFN diagrams with proper pin numbering. Updated Note 1 in the Pinout table. • Updated the 48-pin VQFN diagrams with proper pin numbering. Updated Note 1 in the Pinout table.
General	For each chapter the topic “Product Dependencies” was renamed to “Peripheral Dependencies” and the content was condensed into a table.
Power Supply and Start-Up Considerations	Removed redundant images from Typical Powering Schematics and added a cross reference to the proper schematics.
Processor and Architecture	New verbiage was added to the SysTick section of Cortex-M0+ Peripherals.
Product Mapping	Updated the diagram with a new section for PORT, DIVAS, and Reserved off the IOBUS section.
NVM User Row Mapping	Updated the BODCORE calibration with a new Production Setting.
Clock System	Updated the Diagram in On-Demand, Clock Requests changing CLKEN to CHEN.
GCLK	Added new information about the Peripheral channel to the second line item in Initialization.
OSCCTRL	• Added new verbiage regarding the XOSC Register to External Multipurpose Crystal Oscillator (XOSC) Operation • Added new Verbiage to the Clock Failure detection section of Clock Failure Detection Operation • Added new verbiage for OSC48M Operation at the end of 48 MHz Internal Oscillator (OSC48M) Operation • New verbiage for configuration was added to Loop Divider Ratio Rates • The following register was updated with new verbiage to notes and/or bitfields: – OSC48MDIV
OSC32KCTRL	• Updated 32.768 kHz External Crystal Oscillator (XOSC32K) Operation with new verbiage regarding disabling the XOSC32K bit • Updated Clock Failure Detection Operation with new verbiage at the end of the Clock Failure Detection Section
SUPC	Added content for the SDADC to the SEL bitfield of the VREF register
DSU	Updated the REVISION bit of the DID Register with new text for device revision.
PM	Updated verbiage for the SysTick Overflow Interrupt in SRAM Automatic Low-Power Mode.
PAC	• Removed erroneous text from the Interrupts section • Added new notes to the PERID bit of the WRCTRL Register • Removed the TSENS bit from the INTFLAGA and STATUSA Registers

.....continued

Section	Updates
RTC	• Added verbiage for STANDBY Sleep Mode to Sleep Mode Operation • Updated the following registers with new verbiage for the bitfield COUNT: – COUNT32 – COUNT16 • Added a new note to the CLOCK register
EIC	Updated Asynchronous Edge detection Mode with new verbiage for asynchronous edge detection.
NVMCTRL	Updated Command and Data Interface with verbiage for confirming INTFLAG.READY is '1'.
PORT	Updated PORT Access Priority with new verbiage about IOBUS writes.
EVSYS	• Added new verbiage to Event System Channel for the busy bit • Updated Channel Path with new verbiage regarding 2.5 GCLK_EVSYS periods • Added new verbiage to The Overrun Channel n Interrupt regarding the GCLK • Added new verbiage to Software Event for channels with a resynchronized path • Updated the User Multiplexer Number table in the USERm Register
SERCOM USART	• Updated Collision Detection with verbiage for the Peripheral Bus (APB) • Updated Interrupts with new verbiage for the Data Register Empty interrupt • Updated Sleep Mode Operation with new verbiage for the FERR, PERR, and STANDBY power consumption • Removed erroneous DBGCTRL register • Updated the following registers with new FERR and PERR information: – INTENSET – INTFLAG
SERCOM SPI	• Updated Preloading of the Slave Shift Register to avoid the Preload function • Updated Interrupts with new verbiage for the Data Register Empty interrupt • Updated the following registers with new verbiage: – CTRLB – DBGCTRL
SERCOM I^2C	• Updated 10-Bit Addressing to show it is not available in Slave mode • Updated Quick Command with new verbiage for the Quick Command mode • Updated Slave DMA with new verbiage for transaction length of data • Updated Interrupts with new verbiage for the DRDY, AMATCH, PREC, SB, and MB interrupts • Updated the STATUS Register with new verbiage for the SEXTOUT, CLKHOLD, LOWTOUT, COLL, and BUSERR bits • Removed the TENBITEN bit from the ADDR Register and updated the ADDRMASK and ADDR bits with new bit lengths

.....continued

Section	Updates
TC	• Updated Double Buffering with new verbiage for the STATUS Register • Updated Sleep Mode Operation with information about STANDBY Sleep mode • Updated the following 8 bit registers with new verbiage: – STATUS – DBGCTRL • Updated the following 16 bit registers with new verbiage: – STATUS – DBGCTRL – SYNCBUSY • Updated the following 32 bit registers with new verbiage: – STATUS – DBGCTRL
TCC	• Updated the Configuration Summary to display a 16-bit Counter Size for TCC#1 • Updated Double Buffering with new verbiage for clearing the STATUS bits twice • Updated Dithering Operation with verbiage regarding avoiding an external retrigger event • Updated RAMP2 Operation in Ramp Operation with verbiage for supporting counting up mode • Added new verbiage to the Counter Re-trigger sections of Events detailing the non-support of dithering or if RAMP2 operation is used with a prescaler • Added new verbiage to Sleep Mode Operation detailing STANDBY Sleep mode • Updated the following registers: – CTRLA - Removed the ALOCK bit – CTRLBCLR - new verbiage to the IDXCMD bit – DBGCTRL - new verbiage for the DBGRUN bit – EVCTRL - Updated the EVACT1 and EVACT0 bit descriptions – STATUS - Removed the WAVEBUFV bit and added new text to the register description
CCL	• Updated Initialization with text for disabling • Updated Enabling, Disabling and Resetting with new verbiage about the PAC being enabled • Updated SEQCTRL with new verbiage in the note • Updated LUTCTRLn with new verbiage in the note
ADC	• Updated Offset and Gain Correction with new verbiage to not use it for 8 and 10-bit conversion resolution • Updated Reference Buffer Compensation Offset with new information regarding discarding conversions of the ADC • Removed the DAC from the Diagram in Master/Slave Operation • Updated Sleep Mode Operation with new information for STANDBY Sleep mode • Updated the following registers: – REFCTRL - New verbiage for discarding ADC conversions – INPUTCTRL - Removal of DAC reference from the MUXPOS bit – OFFSETCORR - Updated text for not using Offset correction for 8-bit and 10-bit conversion resolution – DBGCTRL - New verbiage for DBGRUN bit

.....continued

Section	Updates
SDADC	• Updated Features to display 2 external analog differential pairs • Added a new paragraph for STANDBY Sleep Mode to Sleep Mode Operation • Updated the following registers: – REFCTRL - new values in the table for REFSEL – DBGCTRL - Updated verbiage for the DBGRUN bit
AC	Updated the DBGCTRL register with new verbiage for the DBGRUN bit.
DAC	• Updated Sleep Mode Operation with new verbiage for STANDBY • Updated the INTFLAG register with new verbiage for the EMPTY bit • Updated the DBGCTRL Register with new verbiage for the DBGRUN bit
TSENS	• Updated Overview and Features to remove erroneous wording • Updated the CTRLB register with a new register property and note • Updated the DBGCTRL register with new verbiage for the DBGRUN bit
FREQM	Updated the CTRLB Register with a new note.
PDEC	• Updated Prescaler Selection to remove erroneous text • In Position and Rotation Measurement all references starting with Q, such as Q4, Q4S, etc were changed to read X4, and X4S etc • Removed the Count Event Action topic • Removed The description for “Count” from the bulleted item list in Events • Updates were done to the following registers: – EVCTRL - Updated verbiage for the EVE, EVEI, EVINV, and EVACT1 bits

.....continued

Section	Updates
Electrical Characteristics	Updates to formatting, notes, min, typ and max specs were made to the tables and content of the following topics: • Operating Frequencies and Thermal Limitations • Power Supply • CPU Active Power • CPU Idle Power • CPU Standby Power • Peripheral Active Current • Wake-up Timing • I/O Pin Electrical Specifications • Internal Voltage Reference Specifications • Maximum Clock Frequencies Electrical Specifications • XOSC Electrical Specifications • XOSC32K Electrical Specifications • Internal 32.768 kHz RC Oscillator (OSC32K) • Internal 48MHz RC Oscillator (OSC48M) • Ultra Low Power internal 32kHz RC Oscillator (OSCULP32K) • Frequency Digital Phase Locked Loop (FDPLL96M) • Digital-to-Analog Converter (DAC) Module • ADC Electrical Specifications • SDADC Electrical Specifications • Temperature Sensor (TSENS) Electrical Specifications • Analog Comparator (AC) Electrical Specifications • SERCOM SPIx Mode Electrical Specifications • SERCOM USART Electrical Specifications • SERCOM I^2C Electrical Specifications • TC Input Module Electrical Specifications • TCC Module Electrical Specifications • FREQM Electrical Specifications • Flash NVM Electrical Specifications • Position Decoder (PDEC) Electrical Specifications
Packaging	Removed the Packaging table for moisture sensitivity from the following packages: • 48-pin TQFP • 48-pin VQFN • 32-pin TQFP Added in packaging tables for the following package: • 32-pin VQFN Updated the Package Marking Information, and removed the Thermal Considerations topics.

.....continued	
Section	**Updates**
Schematic Checklist	• Modified the following schematics: – Single Power Supply Schematic – Dual Power Supply Schematic • Modified the External Analog Reference Connections table and associated notes • Added notes to the schematics in External Reset Circuit and removed a redundant table • Replaced the text in Unused or Unconnected Pins • Modified the External Clock Source Connections table • Updated the schematics and table in Crystal Oscillator • Added in two new topics: – External Slow Clock Source – 32.768 kHz Crystal Oscillator • Replaced the opening text in Programming and Debug Ports

Revision A - July 2020
This is the initial released version of this document.

The Microchip Website

Microchip provides online support via our website at www.microchip.com/. This website is used to make files and information easily available to customers. Some of the content available includes:

- **Product Support** – Data sheets and errata, application notes and sample programs, design resources, user's guides and hardware support documents, latest software releases and archived software
- **General Technical Support** – Frequently Asked Questions (FAQs), technical support requests, online discussion groups, Microchip design partner program member listing
- **Business of Microchip** – Product selector and ordering guides, latest Microchip press releases, listing of seminars and events, listings of Microchip sales offices, distributors and factory representatives

Product Change Notification Service

Microchip's product change notification service helps keep customers current on Microchip products. Subscribers will receive email notification whenever there are changes, updates, revisions or errata related to a specified product family or development tool of interest.

To register, go to www.microchip.com/pcn and follow the registration instructions.

Customer Support

Users of Microchip products can receive assistance through several channels:

- Distributor or Representative
- Local Sales Office
- Embedded Solutions Engineer (ESE)
- Technical Support

Customers should contact their distributor, representative or ESE for support. Local sales offices are also available to help customers. A listing of sales offices and locations is included in this document.

Technical support is available through the website at: www.microchip.com/support

Microchip Devices Code Protection Feature

Note the following details of the code protection feature on Microchip devices:

- Microchip products meet the specifications contained in their particular Microchip Data Sheet.
- Microchip believes that its family of products is secure when used in the intended manner and under normal conditions.
- There are dishonest and possibly illegal methods being used in attempts to breach the code protection features of the Microchip devices. We believe that these methods require using the Microchip products in a manner outside the operating specifications contained in Microchip's Data Sheets. Attempts to breach these code protection features, most likely, cannot be accomplished without violating Microchip's intellectual property rights.
- Microchip is willing to work with any customer who is concerned about the integrity of its code.
- Neither Microchip nor any other semiconductor manufacturer can guarantee the security of its code. Code protection does not mean that we are guaranteeing the product is "unbreakable." Code protection is constantly evolving. We at Microchip are committed to continuously improving the code protection features of our products. Attempts to break Microchip's code protection feature may be a violation of the Digital Millennium Copyright Act. If such acts allow unauthorized access to your software or other copyrighted work, you may have a right to sue for relief under that Act.

© 2020 Microchip Technology Inc.

Legal Notice

Information contained in this publication is provided for the sole purpose of designing with and using Microchip products. Information regarding device applications and the like is provided only for your convenience and may be superseded by updates. It is your responsibility to ensure that your application meets with your specifications.

THIS INFORMATION IS PROVIDED BY MICROCHIP “AS IS”. MICROCHIP MAKES NO REPRESENTATIONS OR WARRANTIES OF ANY KIND WHETHER EXPRESS OR IMPLIED, WRITTEN OR ORAL, STATUTORY OR OTHERWISE, RELATED TO THE INFORMATION INCLUDING BUT NOT LIMITED TO ANY IMPLIED WARRANTIES OF NON-INFRINGEMENT, MERCHANTABILITY, AND FITNESS FOR A PARTICULAR PURPOSE OR WARRANTIES RELATED TO ITS CONDITION, QUALITY, OR PERFORMANCE.

IN NO EVENT WILL MICROCHIP BE LIABLE FOR ANY INDIRECT, SPECIAL, PUNITIVE, INCIDENTAL OR CONSEQUENTIAL LOSS, DAMAGE, COST OR EXPENSE OF ANY KIND WHATSOEVER RELATED TO THE INFORMATION OR ITS USE, HOWEVER CAUSED, EVEN IF MICROCHIP HAS BEEN ADVISED OF THE POSSIBILITY OR THE DAMAGES ARE FORESEEABLE. TO THE FULLEST EXTENT ALLOWED BY LAW, MICROCHIP'S TOTAL LIABILITY ON ALL CLAIMS IN ANY WAY RELATED TO THE INFORMATION OR ITS USE WILL NOT EXCEED THE AMOUNT OF FEES, IF ANY, THAT YOU HAVE PAID DIRECTLY TO MICROCHIP FOR THE INFORMATION. Use of Microchip devices in life support and/or safety applications is entirely at the buyer’s risk, and the buyer agrees to defend, indemnify and hold harmless Microchip from any and all damages, claims, suits, or expenses resulting from such use. No licenses are conveyed, implicitly or otherwise, under any Microchip intellectual property rights unless otherwise stated.

Trademarks

The Microchip name and logo, the Microchip logo, Adaptec, AnyRate, AVR, AVR logo, AVR Freaks, BesTime, BitCloud, chipKIT, chipKIT logo, CryptoMemory, CryptoRF, dsPIC, FlashFlex, flexPWR, HELDO, IGLOO, JukeBlox, KeeLoq, Kleer, LANCheck, LinkMD, maXStylus, maXTouch, MediaLB, megaAVR, Microsemi, Microsemi logo, MOST, MOST logo, MPLAB, OptoLyzer, PackeTime, PIC, picoPower, PICSTART, PIC32 logo, PolarFire, Prochip Designer, QTouch, SAM-BA, SenGenuity, SpyNIC, SST, SST Logo, SuperFlash, Symmetricom, SyncServer, Tachyon, TempTrackr, TimeSource, tinyAVR, UNI/O, Vectron, and XMEGA are registered trademarks of Microchip Technology Incorporated in the U.S.A. and other countries.

APT, ClockWorks, The Embedded Control Solutions Company, EtherSynch, FlashTec, Hyper Speed Control, HyperLight Load, IntelliMOS, Libero, motorBench, mTouch, Powermite 3, Precision Edge, ProASIC, ProASIC Plus, ProASIC Plus logo, Quiet-Wire, SmartFusion, SyncWorld, Temux, TimeCesium, TimeHub, TimePictra, TimeProvider, Vite, WinPath, and ZL are registered trademarks of Microchip Technology Incorporated in the U.S.A.

Adjacent Key Suppression, AKS, Analog-for-the-Digital Age, Any Capacitor, AnyIn, AnyOut, BlueSky, BodyCom, CodeGuard, CryptoAuthentication, CryptoAutomotive, CryptoCompanion, CryptoController, dsPICDEM, dsPICDEM.net, Dynamic Average Matching, DAM, ECAN, EtherGREEN, In-Circuit Serial Programming, ICSP, INICnet, Inter-Chip Connectivity, JitterBlocker, KleerNet, KleerNet logo, memBrain, Mindi, MiWi, MPASM, MPF, MPLAB Certified logo, MPLIB, MPLINK, MultiTRAK, NetDetach, Omniscient Code Generation, PICDEM, PICDEM.net, PICkit, PICtail, PowerSmart, PureSilicon, QMatrix, REAL ICE, Ripple Blocker, SAM-ICE, Serial Quad I/O, SMART-I.S., SQI, SuperSwitcher, SuperSwitcher II, Total Endurance, TSHARC, USBCheck, VariSense, ViewSpan, WiperLock, Wireless DNA, and ZENA are trademarks of Microchip Technology Incorporated in the U.S.A. and other countries.

SQTP is a service mark of Microchip Technology Incorporated in the U.S.A.

The Adaptec logo, Frequency on Demand, Silicon Storage Technology, and Symmcom are registered trademarks of Microchip Technology Inc. in other countries.

GestIC is a registered trademark of Microchip Technology Germany II GmbH & Co. KG, a subsidiary of Microchip Technology Inc., in other countries.

All other trademarks mentioned herein are property of their respective companies.

© 2020, Microchip Technology Incorporated, Printed in the U.S.A., All Rights Reserved.

ISBN: 978-1-5224-7166-0

Quality Management System

For information regarding Microchip's Quality Management Systems, please visit www.microchip.com/quality.

Worldwide Sales and Service

AMERICAS	ASIA/PACIFIC	ASIA/PACIFIC	EUROPE
Corporate Office 2355 West Chandler Blvd. Chandler, AZ 85224-6199 Tel: 480-792-7200 Fax: 480-792-7277 Technical Support: www.microchip.com/support Web Address: www.microchip.com **Atlanta** Duluth, GA Tel: 678-957-9614 Fax: 678-957-1455 **Austin, TX** Tel: 512-257-3370 **Boston** Westborough, MA Tel: 774-760-0087 Fax: 774-760-0088 **Chicago** Itasca, IL Tel: 630-285-0071 Fax: 630-285-0075 **Dallas** Addison, TX Tel: 972-818-7423 Fax: 972-818-2924 **Detroit** Novi, MI Tel: 248-848-4000 **Houston, TX** Tel: 281-894-5983 **Indianapolis** Noblesville, IN Tel: 317-773-8323 Fax: 317-773-5453 Tel: 317-536-2380 **Los Angeles** Mission Viejo, CA Tel: 949-462-9523 Fax: 949-462-9608 Tel: 951-273-7800 **Raleigh, NC** Tel: 919-844-7510 **New York, NY** Tel: 631-435-6000 **San Jose, CA** Tel: 408-735-9110 Tel: 408-436-4270 **Canada - Toronto** Tel: 905-695-1980 Fax: 905-695-2078	**Australia - Sydney** Tel: 61-2-9868-6733 **China - Beijing** Tel: 86-10-8569-7000 **China - Chengdu** Tel: 86-28-8665-5511 **China - Chongqing** Tel: 86-23-8980-9588 **China - Dongguan** Tel: 86-769-8702-9880 **China - Guangzhou** Tel: 86-20-8755-8029 **China - Hangzhou** Tel: 86-571-8792-8115 **China - Hong Kong SAR** Tel: 852-2943-5100 **China - Nanjing** Tel: 86-25-8473-2460 **China - Qingdao** Tel: 86-532-8502-7355 **China - Shanghai** Tel: 86-21-3326-8000 **China - Shenyang** Tel: 86-24-2334-2829 **China - Shenzhen** Tel: 86-755-8864-2200 **China - Suzhou** Tel: 86-186-6233-1526 **China - Wuhan** Tel: 86-27-5980-5300 **China - Xian** Tel: 86-29-8833-7252 **China - Xiamen** Tel: 86-592-2388138 **China - Zhuhai** Tel: 86-756-3210040	**India - Bangalore** Tel: 91-80-3090-4444 **India - New Delhi** Tel: 91-11-4160-8631 **India - Pune** Tel: 91-20-4121-0141 **Japan - Osaka** Tel: 81-6-6152-7160 **Japan - Tokyo** Tel: 81-3-6880- 3770 **Korea - Daegu** Tel: 82-53-744-4301 **Korea - Seoul** Tel: 82-2-554-7200 **Malaysia - Kuala Lumpur** Tel: 60-3-7651-7906 **Malaysia - Penang** Tel: 60-4-227-8870 **Philippines - Manila** Tel: 63-2-634-9065 **Singapore** Tel: 65-6334-8870 **Taiwan - Hsin Chu** Tel: 886-3-577-8366 **Taiwan - Kaohsiung** Tel: 886-7-213-7830 **Taiwan - Taipei** Tel: 886-2-2508-8600 **Thailand - Bangkok** Tel: 66-2-694-1351 **Vietnam - Ho Chi Minh** Tel: 84-28-5448-2100	**Austria - Wels** Tel: 43-7242-2244-39 Fax: 43-7242-2244-393 **Denmark - Copenhagen** Tel: 45-4485-5910 Fax: 45-4485-2829 **Finland - Espoo** Tel: 358-9-4520-820 **France - Paris** Tel: 33-1-69-53-63-20 Fax: 33-1-69-30-90-79 **Germany - Garching** Tel: 49-8931-9700 **Germany - Haan** Tel: 49-2129-3766400 **Germany - Heilbronn** Tel: 49-7131-72400 **Germany - Karlsruhe** Tel: 49-721-625370 **Germany - Munich** Tel: 49-89-627-144-0 Fax: 49-89-627-144-44 **Germany - Rosenheim** Tel: 49-8031-354-560 **Israel - Ra'anana** Tel: 972-9-744-7705 **Italy - Milan** Tel: 39-0331-742611 Fax: 39-0331-466781 **Italy - Padova** Tel: 39-049-7625286 **Netherlands - Drunen** Tel: 31-416-690399 Fax: 31-416-690340 **Norway - Trondheim** Tel: 47-72884388 **Poland - Warsaw** Tel: 48-22-3325737 **Romania - Bucharest** Tel: 40-21-407-87-50 **Spain - Madrid** Tel: 34-91-708-08-90 Fax: 34-91-708-08-91 **Sweden - Gothenberg** Tel: 46-31-704-60-40 **Sweden - Stockholm** Tel: 46-8-5090-4654 **UK - Wokingham** Tel: 44-118-921-5800 Fax: 44-118-921-5820