EFM32 Gecko Family
EFM32WG Data Sheet

The EFM32 Gecko MCUs are the world's most energy-friendly microcontrollers.

The EFM32WG offers unmatched performance and ultra-low power consumption in both active and sleep modes. EFM32WG devices consume as little as 0.65 µA in Stop mode and 211 µA/MHz in Run mode. It also features autonomous peripherals, high overall chip and analog integration, and the performance of the industry standard 32-bit ARM Cortex-M4 with Floating-Point Unit (FPU) processor, making it perfect for battery-powered systems and systems with high-performance, low-energy requirements.

EFM32WG applications include the following:

- Energy, gas, water, and smart metering
- Health and fitness applications
- Smart accessories
- Alarm and security systems
- Industrial and home automation

KEY FEATURES

- ARM Cortex-M4 with Floating-Point Unit (FPU) at 48 MHz
- Ultra-low power operation
  - 0.65 µA current in Stop (EM3) with brown-out detection and RAM retention
  - 63 µA/MHz in EM1
  - 211 µA/MHz in Run mode (EM0)
- Fast wake-up time of 2 µs
- Hardware cryptography (AES)
- Up to 256 kB of flash and 32 kB of RAM

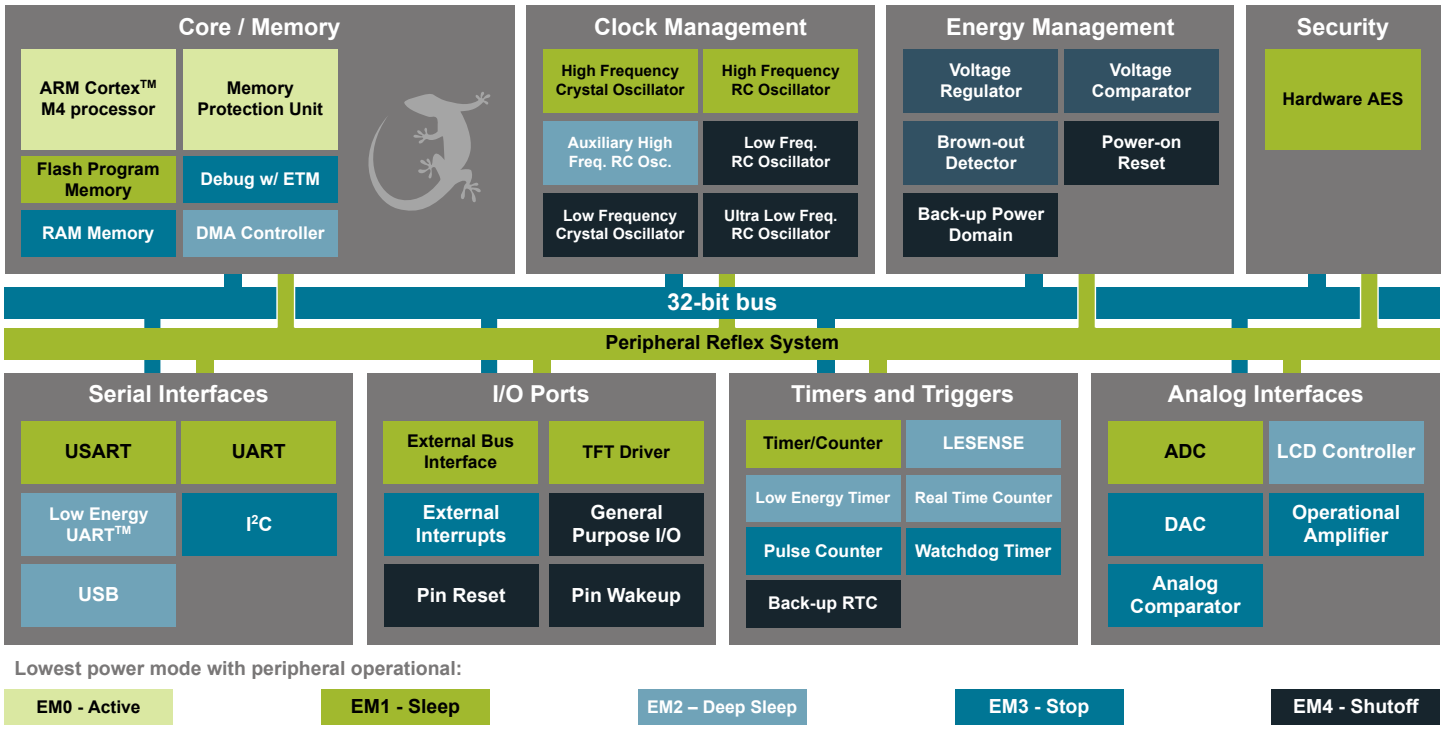

Lowest power mode with peripheral operational:

EM0 - Active | EM1 - Sleep | EM2 – Deep Sleep | EM3 - Stop | EM4 - Shutoff

 Copyright © 2025 by Silicon Laboratories

1. Feature List

- ARM Cortex-M4 CPU platform
  - High-performance 32-bit processor @ up to 48 MHz
  - DSP instruction support and floating-point unit
  - Memory Protection Unit
- Flexible Energy Management System
  - 20 nA @ 3 V Shutoff Mode
  - 0.4 µA @ 3 V Shutoff Mode with RTC
  - 0.65 µA @ 3 V Stop Mode, including Power-on Reset, Brown-out Detector, RAM and CPU retention
  - 0.95 µA @ 3 V Deep Sleep Mode, including RTC with 32.768 kHz oscillator, Power-on Reset, Brown-out Detector, RAM and CPU retention
  - 63 µA/MHz @ 3 V Sleep Mode
  - 211 µA/MHz @ 3 V Run Mode, with code executed from flash
- 256/128/64 kB flash
- 32 kB RAM
- Up to 93 General Purpose I/O pins
  - Configurable push-pull, open-drain, pull-up/down, input filter, drive strength
  - Configurable peripheral I/O locations
  - 16 asynchronous external interrupts
  - Output state retention and wake-up from Shutoff Mode
- 12 Channel DMA Controller
- 12 Channel Peripheral Reflex System (PRS) for autonomous inter-peripheral signaling
- Hardware AES with 128/256-bit keys in 54/75 cycles
- Timers/Counters
  - 4× 16-bit Timer/Counter
    - 4×3 Compare/Capture/PWM channels
    - Dead-Time Insertion on TIMER0
  - 16-bit Low Energy Timer
  - 1× 24-bit Real-Time Counter and 1× 32-bit Real-Time Counter
  - 3× 16/8-bit Pulse Counter
  - Watchdog Timer with dedicated RC oscillator @ 50 nA
- Integrated LCD Controller for up to 8×36 segments
  - Voltage boost, adjustable contrast, and autonomous animation
- Backup Power Domain
  - RTC and retention registers in a separate power domain, available in all energy modes
  - Operation from backup battery when main power drains out
- External Bus Interface for up to 4x256 MB of external memory mapped space
  - TFT Controller with Direct Drive
- Communication interfaces
  - Up to 3× Universal Synchronous/Asynchronous Receiver/Transmitter
    - UART/SPI/SmartCard (ISO 7816)/IrDA/I2S
  - 2× Universal Asynchronous Receiver/Transmitter
  - 2× Low Energy UART
    - Autonomous operation with DMA in Deep Sleep Mode
  - 2× I^2C Interface with SMBus support
    - Address recognition in Stop Mode
  - Universal Serial Bus (USB) with Host & OTG support
    - Fully USB 2.0 compliant
    - On-chip PHY and embedded 5 to 3.3 V regulator

- Ultra-low power precision analog peripherals
  - 12-bit 1 Msamples/s Analog to Digital Converter
    - 8 single-ended channels/4 differential channels
    - On-chip temperature sensor
  - 12-bit 500 ksamples/s Digital to Analog Converter
  - 2× Analog Comparator
    - Capacitive sensing with up to 16 inputs
  - 3× Operational Amplifier
    - 6.1 MHz GBW, Rail-to-rail, Programmable Gain
  - Supply Voltage Comparator
- Low Energy Sensor Interface (LESENSE)
  - Autonomous sensor monitoring in Deep Sleep Mode
  - Wide range of sensors supported, including LC sensors and capacitive buttons
- Ultra efficient Power-on Reset and Brown-Out Detector
- Debug Interface
  - 2-pin Serial Wire Debug interface
    - 1-pin Serial Wire Viewer
  - Embedded Trace Module v3.5 (ETM)
- Pre-programmed USB/UART Bootloader
- Temperature range -40 to 85 ºC
- Single power supply 1.98 to 3.8 V
- Packages:
  - BGA112
  - BGA120
  - LQFP100
  - TQFP64
  - QFN64

2. Ordering Information

The following table shows the available EFM32WG devices.

Table 2.1. Ordering Information

Ordering Code	Flash (kB)	RAM (kB)	Max Speed (MHz)	Supply Voltage (V)	Temperature (ºC)	Package
EFM32WG230F64-B-QFN64[1]	64	32	48	1.98 - 3.8	-40 - 85	QFN64
EFM32WG230F128-B-QFN64[1]	128	32	48	1.98 - 3.8	-40 - 85	QFN64
EFM32WG230F256-B-QFN64	256	32	48	1.98 - 3.8	-40 - 85	QFN64
EFM32WG232F64-B-QFP64[1]	64	32	48	1.98 - 3.8	-40 - 85	TQFP64
EFM32WG232F128-B-QFP64[1]	128	32	48	1.98 - 3.8	-40 - 85	TQFP64
EFM32WG232F256-B-QFP64[1]	256	32	48	1.98 - 3.8	-40 - 85	TQFP64
EFM32WG280F64-B-QFP100[1]	64	32	48	1.98 - 3.8	-40 - 85	LQFP100
EFM32WG280F128-B-QFP100[1]	128	32	48	1.98 - 3.8	-40 - 85	LQFP100
EFM32WG280F256-B-QFP100	256	32	48	1.98 - 3.8	-40 - 85	LQFP100
EFM32WG290F64-B-BGA112[1]	64	32	48	1.98 - 3.8	-40 - 85	BGA112
EFM32WG290F128-B-BGA112[1]	128	32	48	1.98 - 3.8	-40 - 85	BGA112
EFM32WG290F256-B-BGA112[1]	256	32	48	1.98 - 3.8	-40 - 85	BGA112
EFM32WG295F64-B-BGA120[1]	64	32	48	1.98 - 3.8	-40 - 85	BGA120
EFM32WG295F128-B-BGA120[1]	128	32	48	1.98 - 3.8	-40 - 85	BGA120
EFM32WG295F256-B-BGA120[1]	256	32	48	1.98 - 3.8	-40 - 85	BGA120
EFM32WG330F64-B-QFN64[1]	64	32	48	1.98 - 3.8	-40 - 85	QFN64
EFM32WG330F128-B-QFN64[1]	128	32	48	1.98 - 3.8	-40 - 85	QFN64
EFM32WG330F256-B-QFN64	256	32	48	1.98 - 3.8	-40 - 85	QFN64
EFM32WG332F64-B-QFP64[1]	64	32	48	1.98 - 3.8	-40 - 85	TQFP64
EFM32WG332F128-B-QFP64[1]	128	32	48	1.98 - 3.8	-40 - 85	TQFP64
EFM32WG332F256-B-QFP64[1]	256	32	48	1.98 - 3.8	-40 - 85	TQFP64
EFM32WG360F64G-B-CSP81[1]	64	32	48	1.98 - 3.8	-40 - 85	CSP81
EFM32WG360F128G-B-CSP81[1]	128	32	48	1.98 - 3.8	-40 - 85	CSP81
EFM32WG360F256G-B-CSP81[1]	256	32	48	1.98 - 3.8	-40 - 85	CSP81
EFM32WG380F64-B-QFP100[1]	64	32	48	1.98 - 3.8	-40 - 85	LQFP100
EFM32WG380F128-B-QFP100[1]	128	32	48	1.98 - 3.8	-40 - 85	LQFP100
EFM32WG380F256-B-QFP100	256	32	48	1.98 - 3.8	-40 - 85	LQFP100
EFM32WG390F64-B-BGA112[1]	64	32	48	1.98 - 3.8	-40 - 85	BGA112
EFM32WG390F128-B-BGA112[1]	128	32	48	1.98 - 3.8	-40 - 85	BGA112
EFM32WG390F256-B-BGA112[1]	256	32	48	1.98 - 3.8	-40 - 85	BGA112

Ordering Code	Flash (kB)	RAM (kB)	Max Speed (MHz)	Supply Voltage (V)	Temperature (ºC)	Package
EFM32WG395F64-B-BGA120[1]	64	32	48	1.98 - 3.8	-40 - 85	BGA120
EFM32WG395F128-B-BGA120[1]	128	32	48	1.98 - 3.8	-40 - 85	BGA120
EFM32WG395F256-B-BGA120[1]	256	32	48	1.98 - 3.8	-40 - 85	BGA120
EFM32WG840F64-B-QFN64[1]	64	32	48	1.98 - 3.8	-40 - 85	QFN64
EFM32WG840F128-B-QFN64[1]	128	32	48	1.98 - 3.8	-40 - 85	QFN64
EFM32WG840F256-B-QFN64[1]	256	32	48	1.98 - 3.8	-40 - 85	QFN64
EFM32WG842F64-B-QFP64[1]	64	32	48	1.98 - 3.8	-40 - 85	TQFP64
EFM32WG842F128-B-QFP64[1]	128	32	48	1.98 - 3.8	-40 - 85	TQFP64
EFM32WG842F256-B-QFP64[1]	256	32	48	1.98 - 3.8	-40 - 85	TQFP64
EFM32WG880F64-B-QFP100[1]	64	32	48	1.98 - 3.8	-40 - 85	LQFP100
EFM32WG880F128-B-QFP100[1]	128	32	48	1.98 - 3.8	-40 - 85	LQFP100
EFM32WG880F256-B-QFP100	256	32	48	1.98 - 3.8	-40 - 85	LQFP100
EFM32WG890F64-B-BGA112[1]	64	32	48	1.98 - 3.8	-40 - 85	BGA112
EFM32WG890F128-B-BGA112[1]	128	32	48	1.98 - 3.8	-40 - 85	BGA112
EFM32WG890F256-B-BGA112	256	32	48	1.98 - 3.8	-40 - 85	BGA112
EFM32WG895F64-B-BGA120[1]	64	32	48	1.98 - 3.8	-40 - 85	BGA120
EFM32WG895F128-B-BGA120[1]	128	32	48	1.98 - 3.8	-40 - 85	BGA120
EFM32WG895F256-B-BGA120[1]	256	32	48	1.98 - 3.8	-40 - 85	BGA120
EFM32WG900F256G-B-D1I [2]	256	32	48	1.98 - 3.8	-40 - 85	Wafer
EFM32WG940F64-B-QFN64[1]	64	32	48	1.98 - 3.8	-40 - 85	QFN64
EFM32WG940F128-B-QFN64[1]	128	32	48	1.98 - 3.8	-40 - 85	QFN64
EFM32WG940F256-B-QFN64[1]	256	32	48	1.98 - 3.8	-40 - 85	QFN64
EFM32WG942F64-B-QFP64[1]	64	32	48	1.98 - 3.8	-40 - 85	TQFP64
EFM32WG942F128-B-QFP64[1]	128	32	48	1.98 - 3.8	-40 - 85	TQFP64
EFM32WG942F256-B-QFP64[1]	256	32	48	1.98 - 3.8	-40 - 85	TQFP64
EFM32WG980F64-B-QFP100[1]	64	32	48	1.98 - 3.8	-40 - 85	LQFP100
EFM32WG980F128-B-QFP100[1]	128	32	48	1.98 - 3.8	-40 - 85	LQFP100
EFM32WG980F256-B-QFP100[1]	256	32	48	1.98 - 3.8	-40 - 85	LQFP100
EFM32WG990F64-B-BGA112[1]	64	32	48	1.98 - 3.8	-40 - 85	BGA112
EFM32WG990F128-B-BGA112[1]	128	32	48	1.98 - 3.8	-40 - 85	BGA112
EFM32WG990F256-B-BGA112	256	32	48	1.98 - 3.8	-40 - 85	BGA112
EFM32WG995F64-B-BGA120[1]	64	32	48	1.98 - 3.8	-40 - 85	BGA120
EFM32WG995F128-B-BGA120[1]	128	32	48	1.98 - 3.8	-40 - 85	BGA120
EFM32WG995F256-B-BGA120[1]	256	32	48	1.98 - 3.8	-40 - 85	BGA120

Ordering Code	Flash (kB)	RAM (kB)	Max Speed (MHz)	Supply Voltage (V)	Temperature (ºC)	Package

Note:

1. End of Life (EOL).
2. Not Recommended for New Design (NRND).

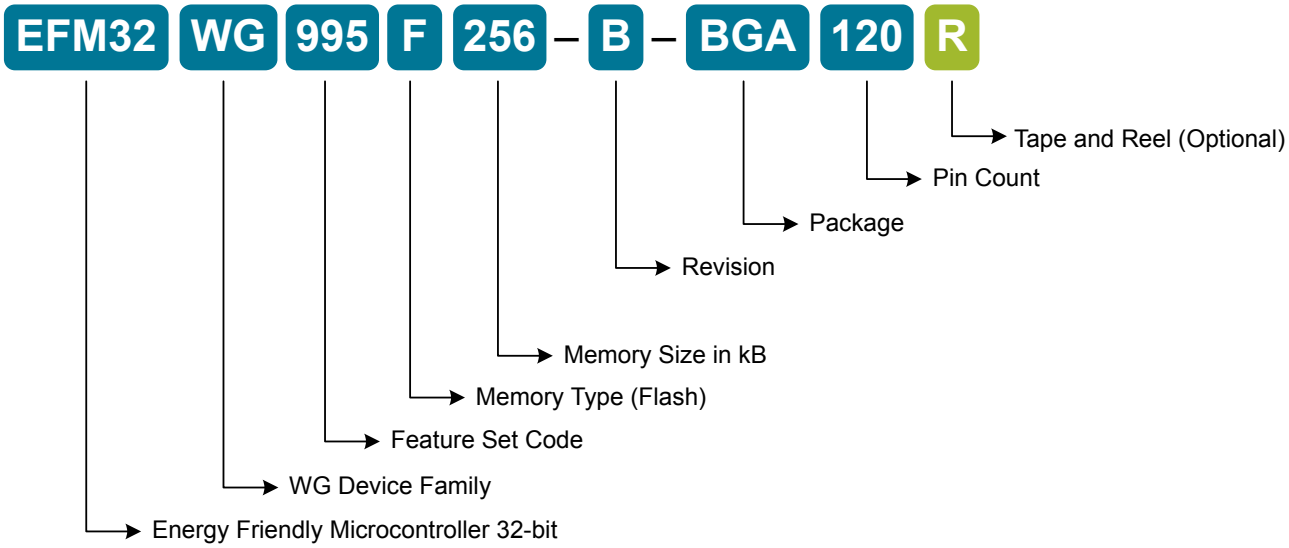

Figure 2.1. Ordering Code Decoder

Adding the suffix 'R' to the part number (e.g. EFM32WG995F256-B-BGA120R) denotes tape and reel packaging.

Visit www.silabs.com for information on global distributors and representatives.

Table of Contents

1. Feature List . . . 2

2. Ordering Information . . . 4

3. System Summary . . . 13

3.1 System Introduction . . . 13
3.1.1 ARM Cortex-M4 Core . . . 13
3.1.2 Debug Interface (DBG) . . . 13
3.1.3 Memory System Controller (MSC) . . . 13
3.1.4 Direct Memory Access Controller (DMA) . . . 14
3.1.5 Reset Management Unit (RMU) . . . 14
3.1.6 Energy Management Unit (EMU) . . . 14
3.1.7 Clock Management Unit (CMU) . . . 14
3.1.8 Watchdog (WDOG) . . . 14
3.1.9 Peripheral Reflex System (PRS) . . . 14
3.1.10 External Bus Interface (EBI) . . . 14
3.1.11 TFT Direct Drive . . . 14
3.1.12 Universal Serial Bus Controller (USB) . . . 14
3.1.13 Inter-Integrated Circuit Interface (I2C) . . . 15
3.1.14 Universal Synchronous/Asynchronous Receiver/Transmitter (USART) . . . 15
3.1.15 Pre-Programmed USB/UART Bootloader . . . 15
3.1.16 Universal Asynchronous Receiver/Transmitter (UART) . . . 15
3.1.17 Low Energy Universal Asynchronous Receiver/Transmitter (LEUART) . . . 15
3.1.18 Timer/Counter (TIMER) . . . 15
3.1.19 Real Time Counter (RTC) . . . 15
3.1.20 Backup Real Time Counter (BURTC) . . . 15
3.1.21 Low Energy Timer (LETIMER) . . . 15
3.1.22 Pulse Counter (PCNT) . . . 15
3.1.23 Analog Comparator (ACMP) . . . 16
3.1.24 Voltage Comparator (VCMP) . . . 16
3.1.25 Analog to Digital Converter (ADC) . . . 16
3.1.26 Digital to Analog Converter (DAC) . . . 16
3.1.27 Operational Amplifier (OPAMP) . . . 16
3.1.28 Low Energy Sensor Interface (LESENSE) . . . 16
3.1.29 Backup Power Domain . . . 16
3.1.30 Advanced Encryption Standard Accelerator (AES) . . . 16
3.1.31 General Purpose Input/Output (GPIO) . . . 16
3.1.32 Liquid Crystal Display Driver (LCD) . . . 17

3.2 Configuration Summary . . . 17
3.2.1 EFM32WG230 . . . 18
3.2.2 EFM32WG232 . . . 20
3.2.3 EFM32WG280 . . . 22
3.2.4 EFM32WG290 . . . 24
3.2.5 EFM32WG295 . . . 26
3.2.6 EFM32WG330 . . . 28
3.2.7 EFM32WG332 . . . 30

3.2.8 EFM32WG360 . . . 32
3.2.9 EFM32WG380 . . . 34
3.2.10 EFM32WG390 . . . 36
3.2.11 EFM32WG395 . . . 38
3.2.12 EFM32WG840 . . . 40
3.2.13 EFM32WG842 . . . 42
3.2.14 EFM32WG880 . . . 44
3.2.15 EFM32WG890 . . . 46
3.2.16 EFM32WG895 . . . 48
3.2.17 EFM32WG900 . . . 50
3.2.18 EFM32WG940 . . . 52
3.2.19 EFM32WG942 . . . 54
3.2.20 EFM32WG980 . . . 56
3.2.21 EFM32WG990 . . . 58
3.2.22 EFM32WG995 . . . 60

3.3 Memory Map . . . 62

4. Electrical Characteristics . . . 64

4.1 Test Conditions . . . 64
4.1.1 Typical Values . . . 64
4.1.2 Minimum and Maximum Values . . . 64

4.2 Absolute Maximum Ratings . . . 64

4.3 General Operating Conditions . . . 64

4.4 Backup Supply Domain . . . 65

4.5 Current Consumption . . . 66
4.5.1 EM1 Current Consumption . . . 68
4.5.2 EM2 Current Consumption . . . 71
4.5.3 EM3 Current Consumption . . . 72
4.5.4 EM4 Current Consumption . . . 72

4.6 Transition between Energy Modes . . . 73

4.7 Power Management . . . 73

4.8 Flash . . . 74

4.9 General Purpose Input Output . . . 75

4.10 Oscillators . . . 83
4.10.1 LFXO . . . 83
4.10.2 HFXO . . . 83
4.10.3 LFRCO . . . 84
4.10.4 HFRCO . . . 85
4.10.5 AUXHFRCO . . . 90
4.10.6 ULFRCO . . . 90

4.11 Analog Digital Converter (ADC) . . . 91
4.11.1 Typical Performance . . . 97

4.12 Digital Analog Converter (DAC) . . . 102

4.13 Operational Amplifier (OPAMP) . . . 104

4.14 Analog Comparator (ACMP) . . . 111
4.15 Voltage Comparator (VCMP) . . . 119
4.16 EBI . . . 120
4.17 LCD . . . 125
4.18 I2C . . . 126
4.19 USART SPI . . . 128
4.20 Digital Peripherals . . . 130

5. Pin Definitions . . . 131

5.1 EFM32WG230 (QFN64) . . . 131
5.1.1 Pinout . . . 131
5.1.2 Alternate Functionality Pinout . . . 135
5.1.3 GPIO Pinout Overview . . . 140
5.1.4 Opamp Pinout Overview . . . 140

5.2 EFM32WG232 (TQFP64) . . . 141
5.2.1 Pinout . . . 141
5.2.2 Alternate Functionality Pinout . . . 145
5.2.3 GPIO Pinout Overview . . . 149
5.2.4 Opamp Pinout Overview . . . 150

5.3 EFM32WG280 (LQFP100) . . . 151
5.3.1 Pinout . . . 151
5.3.2 Alternate Functionality Pinout . . . 157
5.3.3 GPIO Pinout Overview . . . 164
5.3.4 Opamp Pinout Overview . . . 164

5.4 EFM32WG290 (BGA112) . . . 165
5.4.1 Pinout . . . 165
5.4.2 Alternate Functionality Pinout . . . 171
5.4.3 GPIO Pinout Overview . . . 178
5.4.4 Opamp Pinout Overview . . . 178

5.5 EFM32WG295 (BGA120) . . . 179
5.5.1 Pinout . . . 179
5.5.2 Alternate Functionality Pinout . . . 185
5.5.3 GPIO Pinout Overview . . . 192
5.5.4 Opamp Pinout Overview . . . 192

5.6 EFM32WG330 (QFN64) . . . 193
5.6.1 Pinout . . . 193
5.6.2 Alternate Functionality Pinout . . . 197
5.6.3 GPIO Pinout Overview . . . 202
5.6.4 Opamp Pinout Overview . . . 202

5.7 EFM32WG332 (TQFP64) . . . 203
5.7.1 Pinout . . . 203
5.7.2 Alternate Functionality Pinout . . . 207
5.7.3 GPIO Pinout Overview . . . 211
5.7.4 Opamp Pinout Overview . . . 212

5.8 EFM32WG360 (CSP81) . . . 213

5.8.1 Pinout . . . 213
5.8.2 Alternate Functionality Pinout . . . 218
5.8.3 GPIO Pinout Overview . . . 223
5.8.4 Opamp Pinout Overview . . . 223

5.9 EFM32WG380 (LQFP100) . . . 224
5.9.1 Pinout . . . 224
5.9.2 Alternate Functionality Pinout . . . 229
5.9.3 GPIO Pinout Overview . . . 236
5.9.4 Opamp Pinout Overview . . . 236

5.10 EFM32WG390 (BGA112) . . . 237
5.10.1 Pinout . . . 237
5.10.2 Alternate Functionality Pinout . . . 243
5.10.3 GPIO Pinout Overview . . . 250
5.10.4 Opamp Pinout Overview . . . 250

5.11 EFM32WG395 (BGA120) . . . 251
5.11.1 Pinout . . . 251
5.11.2 Alternate Functionality Pinout . . . 257
5.11.3 GPIO Pinout Overview . . . 264
5.11.4 Opamp Pinout Overview . . . 265

5.12 EFM32WG840 (QFN64) . . . 266
5.12.1 Pinout . . . 266
5.12.2 Alternate Functionality Pinout . . . 270
5.12.3 GPIO Pinout Overview . . . 276
5.12.4 Opamp Pinout Overview . . . 276

5.13 EFM32WG842 (TQFP64) . . . 277
5.13.1 Pinout . . . 277
5.13.2 Alternate Functionality Pinout . . . 281
5.13.3 GPIO Pinout Overview . . . 287
5.13.4 Opamp Pinout Overview . . . 287

5.14 EFM32WG880 (LQFP100) . . . 288
5.14.1 Pinout . . . 288
5.14.2 Alternate Functionality Pinout . . . 294
5.14.3 GPIO Pinout Overview . . . 303
5.14.4 Opamp Pinout Overview . . . 304

5.15 EFM32WG890 (BGA112) . . . 305
5.15.1 Pinout . . . 305
5.15.2 Alternate Functionality Pinout . . . 311
5.15.3 GPIO Pinout Overview . . . 320
5.15.4 Opamp Pinout Overview . . . 321

5.16 EFM32WG895 (BGA120) . . . 322
5.16.1 Pinout . . . 322
5.16.2 Alternate Functionality Pinout . . . 328
5.16.3 GPIO Pinout Overview . . . 337
5.16.4 Opamp Pinout Overview . . . 337

5.17 EFM32WG900 (Wafer) . . . 338
5.17.1 Padout . . . 338

5.17.2 Alternate Functionality Padout . . . 344
5.17.3 GPIO Pinout Overview . . . 353
5.17.4 Opamp Pinout Overview . . . 354

5.18 EFM32WG940 (QFN64) . . . 355
5.18.1 Pinout . . . 355
5.18.2 Alternate Functionality Pinout . . . 359
5.18.3 GPIO Pinout Overview . . . 365
5.18.4 Opamp Pinout Overview . . . 365

5.19 EFM32WG942 (TQFP64) . . . 366
5.19.1 Pinout . . . 366
5.19.2 Alternate Functionality Pinout . . . 370
5.19.3 GPIO Pinout Overview . . . 375
5.19.4 Opamp Pinout Overview . . . 376

5.20 EFM32WG980 (LQFP100) . . . 377
5.20.1 Pinout . . . 377
5.20.2 Alternate Functionality Pinout . . . 383
5.20.3 GPIO Pinout Overview . . . 392
5.20.4 Opamp Pinout Overview . . . 392

5.21 EFM32WG990 (BGA112) . . . 393
5.21.1 Pinout . . . 393
5.21.2 Alternate Functionality Pinout . . . 399
5.21.3 GPIO Pinout Overview . . . 408
5.21.4 Opamp Pinout Overview . . . 408

5.22 EFM32WG995 (BGA120) . . . 409
5.22.1 Pinout . . . 409
5.22.2 Alternate Functionality Pinout . . . 415
5.22.3 GPIO Pinout Overview . . . 424
5.22.4 Opamp Pinout Overview . . . 425

6. BGA112 Package Specifications . . . 426

6.1 BGA112 Package Dimensions . . . 426

6.2 BGA112 PCB Layout . . . 427

6.3 BGA112 Package Marking . . . 429

7. BGA120 Package Specifications . . . 430

7.1 BGA120 Package Dimensions . . . 430

7.2 BGA120 PCB Layout . . . 431

7.3 BGA120 Package Marking . . . 433

8. CSP81 Package Specifications . . . 434

8.1 CSP81 Package Dimensions . . . 434

8.2 CSP81 PCB Layout . . . 436

8.3 CSP81 Package Marking . . . 439

8.4 CSP81 Environmental . . . 439

9. LQFP100 Package Specifications . . . 440

9.1 LQFP100 Package Dimensions 440
9.2 LQFP100 PCB Layout 442
9.3 LQFP100 Package Marking 444
10. TQFP64 Package Specifications 445
10.1 TQFP64 Package Dimensions 445
10.2 TQFP64 PCB Layout 447
10.3 TQFP64 Package Marking 449
11. QFN64 Package Specifications 450
11.1 QFN64 Package Dimensions. 450
11.2 QFN64 PCB Layout 452
11.3 QFN64 Package Marking 454
12. Wafer Specifications 455
12.1 Bonding Instructions 455
12.2 Wafer Description 455
12.2.1 Environmental 455
12.3 Wafer Storage Guidelines 456
12.4 Failure Analysis (FA) Guidelines 456
13. Chip Revision, Solder Information, Errata 457
13.1 Chip Revision 457
13.2 Soldering Information 457
13.3 Errata 457
14. Revision History. 458

3. System Summary

3.1 System Introduction

The EFM32 MCUs are the world's most energy friendly microcontrollers. With a unique combination of the powerful 32-bit ARM Cortex-M4 with Floating-Point Unit (FPU), innovative low energy techniques, short wake-up time from energy saving modes, and a wide selection of peripherals, the EFM32WG microcontroller is well suited for any battery operated application as well as other systems requiring high performance and low-energy consumption. This section gives a short introduction to each of the modules in general terms and also shows a summary of the configuration for the EFM32WG devices. For a complete feature set and in-depth information on the modules, refer to the EFM32WG Reference Manual.

A block diagram of the EFM32WG is shown in the following figure.

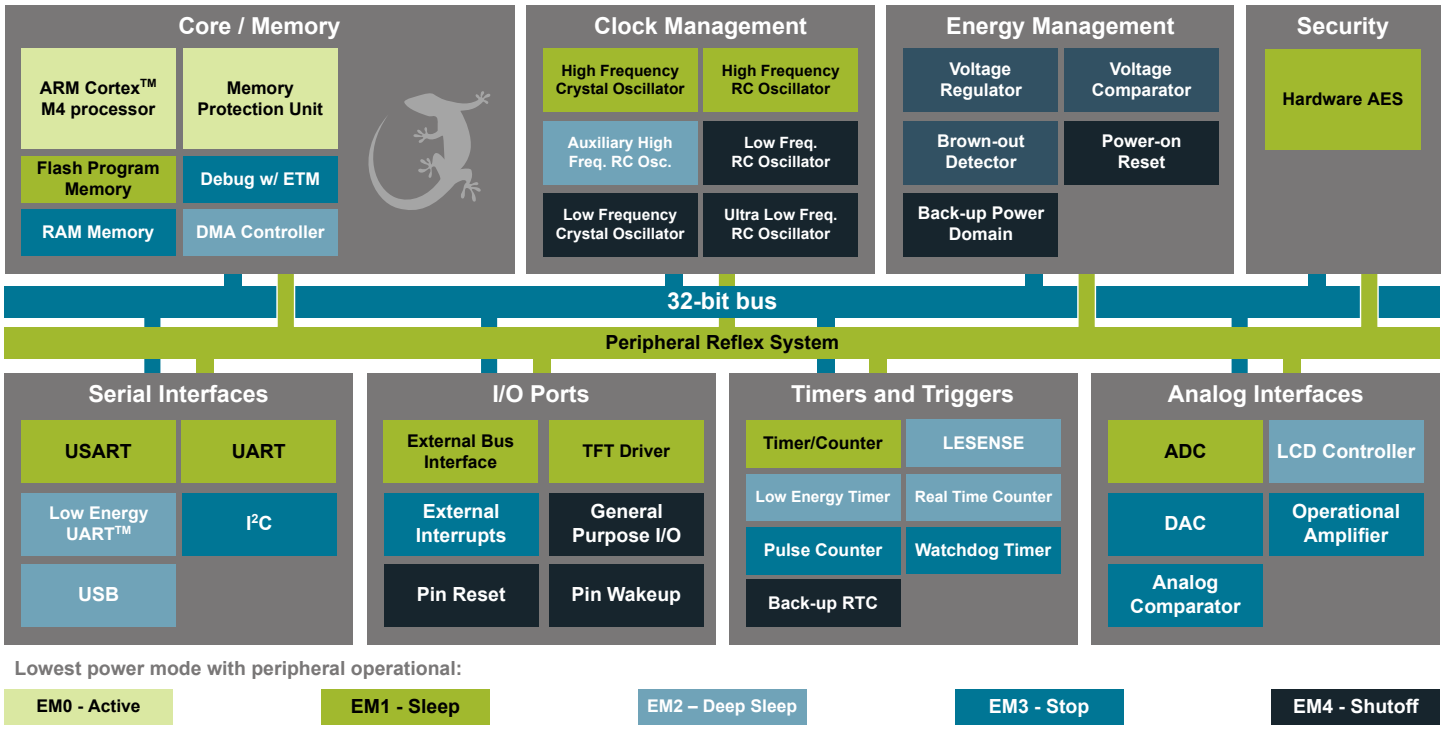

Figure 3.1. Block Diagram

3.1.1 ARM Cortex-M4 Core

The ARM Cortex-M4 includes a 32-bit RISC processor which can achieve as much as 1.25 Dhrystone MIPS/MHz. A Memory Protection Unit with support for up to 8 memory segments is included, as well as a Wake-up Interrupt Controller handling interrupts triggered while the CPU is asleep. The EFM32 implementation of the Cortex-M4 is described in detail in EFM32WG Reference Manual.

3.1.2 Debug Interface (DBG)

This device includes hardware debug support through a 2-pin serial-wire debug interface and an Embedded Trace Module (ETM) for data/instruction tracing. In addition there is also a 1-wire Serial Wire Viewer pin which can be used to output profiling information, data trace and software-generated messages.

3.1.3 Memory System Controller (MSC)

The Memory System Controller (MSC) is the program memory unit of the EFM32WG microcontroller. The flash memory is readable and writable from both the Cortex-M4 and DMA. The flash memory is divided into two blocks; the main block and the information block. Program code is normally written to the main block. Additionally, the information block is available for special user data and flash lock bits. There is also a read-only page in the information block containing system and device calibration data. Read and write operations are supported in the energy modes EM0 and EM1.

3.1.4 Direct Memory Access Controller (DMA)

The Direct Memory Access (DMA) controller performs memory operations independently of the CPU. This has the benefit of reducing the energy consumption and the workload of the CPU, and enables the system to stay in low energy modes when moving for instance data from the USART to RAM or from the External Bus Interface to a PWM-generating timer. The DMA controller uses the PL230 µDMA controller licensed from ARM.

3.1.5 Reset Management Unit (RMU)

The RMU is responsible for handling the reset functionality of the EFM32WG.

3.1.6 Energy Management Unit (EMU)

The Energy Management Unit (EMU) manage all the low energy modes (EM) in EFM32WG microcontrollers. Each energy mode manages if the CPU and the various peripherals are available. The EMU can also be used to turn off the power to unused SRAM blocks.

3.1.7 Clock Management Unit (CMU)

The Clock Management Unit (CMU) is responsible for controlling the oscillators and clocks on-board the EFM32WG. The CMU provides the capability to turn on and off the clock on an individual basis to all peripheral modules in addition to enable/disable and configure the available oscillators. The high degree of flexibility enables software to minimize energy consumption in any specific application by not wasting power on peripherals and oscillators that are inactive.

3.1.8 Watchdog (WDOG)

The purpose of the watchdog timer is to generate a reset in case of a system failure, to increase application reliability. The failure may e.g. be caused by an external event, such as an ESD pulse, or by a software failure.

3.1.9 Peripheral Reflex System (PRS)

The Peripheral Reflex System (PRS) system is a network which lets the different peripheral module communicate directly with each other without involving the CPU. Peripheral modules which send out Reflex signals are called producers. The PRS routes these reflex signals to consumer peripherals which apply actions depending on the data received. The format for the Reflex signals is not given, but edge triggers and other functionality can be applied by the PRS.

3.1.10 External Bus Interface (EBI)

The External Bus Interface provides access to external parallel interface devices such as SRAM, FLASH, ADCs and LCDs. The interface is memory mapped into the address bus of the Cortex-M4. This enables seamless access from software without manually manipulating the IO settings each time a read or write is performed. The data and address lines are multiplexed in order to reduce the number of pins required to interface the external devices. The timing is adjustable to meet specifications of the external devices. The interface is limited to asynchronous devices.

3.1.11 TFT Direct Drive

The EBI contains a TFT controller which can drive a TFT via a 565 RGB interface. The TFT controller supports programmable display and port sizes and offers accurate control of frequency and setup and hold timing. Direct Drive is supported for TFT displays which do not have their own frame buffer. In that case TFT Direct Drive can transfer data from either on-chip memory or from an external memory device to the TFT at low CPU load. Automatic alpha-blending and masking is also supported for transfers through the EBI interface.

3.1.12 Universal Serial Bus Controller (USB)

The USB is a full-speed USB 2.0 compliant OTG host/device controller. The USB can be used in Device, On-the-Go (OTG) Dual Role Device, or Host-only configuration. In OTG mode, the USB supports both Host Negotiation Protocol (HNP) and Session Request Protocol (SRP). The device supports both full-speed (12 Mbit/s) and low-speed (1.5 Mbit/s) operation. The USB device includes an internal, dedicated Descriptor-Based Scatter/Gather DMA and supports up to 6 OUT endpoints and 6 IN endpoints, in addition to endpoint 0. The on-chip PHY includes all OTG features, except for the voltage booster for supplying 5V to VBUS when operating as a host.

3.1.13 Inter-Integrated Circuit Interface (I2C)

The I^2C module provides an interface between the MCU and a serial I^2C-bus. It is capable of acting as both a leader and a follower, and supports multi-leader buses. Both standard-mode, fast-mode and fastmode plus speeds are supported, allowing transmission rates all the way from 10 kbit/s up to 1 Mbit/s. Follower arbitration and timeouts are also provided to allow implementation of an SMBus compliant system. The interface provided to software by the I^2C module, allows both fine-grained control of the transmission process and close to automatic transfers. Automatic recognition of follower addresses is provided in all energy modes.

3.1.14 Universal Synchronous/Asynchronous Receiver/Transmitter (USART)

The Universal Synchronous Asynchronous serial Receiver and Transmitter (USART) is a very flexible serial I/O module. It supports full duplex asynchronous UART communication as well as RS-485, SPI, MicroWire and 3-wire. It can also interface with ISO7816 SmartCards, IrDA, and I2S devices.

3.1.15 Pre-Programmed USB/UART Bootloader

The bootloader presented in application note, AN0042: USB/UART Bootloader, is pre-programmed in the device at factory. The bootloader enables users to program the EFM32 through a UART or a USB CDC class virtual UART without the need for a debugger. The autobaud feature, interface, and commands are described further in the application note.

3.1.16 Universal Asynchronous Receiver/Transmitter (UART)

The Universal Asynchronous serial Receiver and Transmitter (UART) is a very flexible serial I/O module. It supports full- and half-duplex asynchronous UART communication.

3.1.17 Low Energy Universal Asynchronous Receiver/Transmitter (LEUART)

The unique LEUART™, the Low Energy UART, is a UART that allows two-way UART communication on a strict power budget. Only a 32.768 kHz clock is needed to allow UART communication up to 9600 baud/ s. The LEUART includes all necessary hardware support to make asynchronous serial communication possible with minimum of software intervention and energy consumption.

3.1.18 Timer/Counter (TIMER)

The 16-bit general purpose timer has three compare/capture channels for input capture and compare/Pulse-Width Modulation (PWM) output. TIMER0 also includes a Dead-Time Insertion module suitable for motor control applications.

3.1.19 Real Time Counter (RTC)

The Real Time Counter (RTC) contains a 24-bit counter and is clocked either by a 32.768 kHz crystal oscillator, or a 32.768 kHz RC oscillator. In addition to energy modes EM0 and EM1, the RTC is also available in EM2. This makes it ideal for keeping track of time since the RTC is enabled in EM2 where most of the device is powered down.

3.1.20 Backup Real Time Counter (BURTC)

The Backup Real Time Counter (BURTC) contains a 32-bit counter and is clocked either by a 32.768 kHz crystal oscillator, a 32.768 kHz RC oscillator or a 1 kHz ULFRCO. The BURTC is available in all Energy Modes and it can also run in backup mode, making it operational even if the main power should drain out.

3.1.21 Low Energy Timer (LETIMER)

The unique LETIMER™, the Low Energy Timer, is a 16-bit timer that is available in energy mode EM2 in addition to EM1 and EM0. Because of this, it can be used for timing and output generation when most of the device is powered down, allowing simple tasks to be performed while the power consumption of the system is kept at an absolute minimum. The LETIMER can be used to output a variety of waveforms with minimal software intervention. It is also connected to the Real Time Counter (RTC), and can be configured to start counting on compare matches from the RTC.

3.1.22 Pulse Counter (PCNT)

The Pulse Counter (PCNT) can be used for counting pulses on a single input or to decode quadrature encoded inputs. It runs off either the internal LFACLK or the PCNTn_S0IN pin as external clock source. The module may operate in energy mode EM0 - EM3.

3.1.23 Analog Comparator (ACMP)

The Analog Comparator is used to compare the voltage of two analog inputs, with a digital output indicating which input voltage is higher. Inputs can either be one of the selectable internal references or from external pins. Response time and thereby also the current consumption can be configured by altering the current supply to the comparator.

3.1.24 Voltage Comparator (VCMP)

The Voltage Supply Comparator is used to monitor the supply voltage from software. An interrupt can be generated when the supply falls below or rises above a programmable threshold. Response time and thereby also the current consumption can be configured by altering the current supply to the comparator.

3.1.25 Analog to Digital Converter (ADC)

The ADC is a Successive Approximation Register (SAR) architecture, with a resolution of up to 12 bits at up to one million samples per second. The integrated input mux can select inputs from 8 external pins and 6 internal signals.

3.1.26 Digital to Analog Converter (DAC)

The Digital to Analog Converter (DAC) can convert a digital value to an analog output voltage. The DAC is fully differential rail-to-rail, with 12-bit resolution. It has two single-ended output buffers which can be combined into one differential output. The DAC may be used for a number of different applications such as sensor interfaces or sound output.

3.1.27 Operational Amplifier (OPAMP)

The EFM32WG features up to three Operational Amplifiers. The Operational Amplifier is a versatile general purpose amplifier with rail-to-rail differential input and rail-to-rail single-ended output. The input can be set to pin, DAC or OPAMP, whereas the output can be pin, OPAMP or ADC. The current is programmable and the OPAMP has various internal configurations such as unity gain, programmable gain using internal resistors etc.

3.1.28 Low Energy Sensor Interface (LESENSE)

The Low Energy Sensor Interface (LESENSE™), is a highly configurable sensor interface with support for up to 16 individually configurable sensors. By controlling the analog comparators and DAC, LESENSE is capable of supporting a wide range of sensors and measurement schemes, and can for instance measure LC sensors, resistive sensors and capacitive sensors. LESENSE also includes a programmable FSM which enables simple processing of measurement results without CPU intervention. LESENSE is available in energy mode EM2, in addition to EM0 and EM1, making it ideal for sensor monitoring in applications with a strict energy budget.

3.1.29 Backup Power Domain

The backup power domain is a separate power domain containing a Backup Real Time Counter, BURTC, and a set of retention registers, available in all energy modes. This power domain can be configured to automatically change power source to a backup battery when the main power drains out. The backup power domain enables the EFM32WG to keep track of time and retain data, even if the main power source should drain out.

3.1.30 Advanced Encryption Standard Accelerator (AES)

The AES accelerator performs AES encryption and decryption with 128-bit or 256-bit keys. Encrypting or decrypting one 128-bit data block takes 52 HFCORECLK cycles with 128-bit keys and 75 HFCORECLK cycles with 256-bit keys. The AES module is an AHB subordinate which enables efficient access to the data and key registers. All write accesses to the AES module must be 32-bit operations, i.e. 8- or 16-bit operations are not supported.

3.1.31 General Purpose Input/Output (GPIO)

In the EFM32WG, there are up to 93 General Purpose Input/Output (GPIO) pins, which are divided into ports with up to 16 pins each. These pins can individually be configured as either an output or input. More advanced configurations like open-drain, filtering and drive strength can also be configured individually for the pins. The GPIO pins can also be overridden by peripheral pin connections, like Timer PWM outputs or USART communication, which can be routed to several locations on the device. The GPIO supports up to 16 asynchronous external pin interrupts, which enables interrupts from any pin on the device. Also, the input value of a pin can be routed through the Peripheral Reflex System to other peripherals.

3.1.32 Liquid Crystal Display Driver (LCD)

The LCD driver is capable of driving a segmented LCD display with up to 8x36 segments. A voltage boost function enables it to provide the LCD display with higher voltage than the supply voltage for the device. In addition, an animation feature can run custom animations on the LCD display without any CPU intervention. The LCD driver can also remain active even in Energy Mode 2 and provides a Frame Counter interrupt that can wake-up the device on a regular basis for updating data.

3.2 Configuration Summary

The following sections provide device-specific features of the EFM32WG family of MCUs. These features are subsets of the full feature set described in the EFM32WG Reference Manual.

3.2.1 EFM32WG230

The following table describes device-specific implementation of the EFM32WG230 features.

Table 3.1. EFM32WG230 Configuration Summary

Module	Configuration	Pin Connections
Cortex-M4	Full configuration	NA
DBG	Full configuration	DBG_SWCLK, DBG_SWDIO, DBG_SWO
MSC	Full configuration	NA
DMA	Full configuration	NA
RMU	Full configuration	NA
EMU	Full configuration	NA
CMU	Full configuration	CMU_OUT0, CMU_OUT1
WDOG	Full configuration	NA
PRS	Full configuration	NA
I2C0	Full configuration	I2C0_SDA, I2C0_SCL
I2C1	Full configuration	I2C1_SDA, I2C1_SCL
USART0	Full configuration with IrDA	US0_TX, US0_RX. US0_CLK, US0_CS
USART1	Full configuration with I2S	US1_TX, US1_RX, US1_CLK, US1_CS
USART2	Full configuration with I2S	US2_TX, US2_RX, US2_CLK, US2_CS
LEUART0	Full configuration	LEU0_TX, LEU0_RX
LEUART1	Full configuration	LEU1_TX, LEU1_RX
TIMER0	Full configuration with DTI	TIM0_CC[2:0], TIM0_CDTI[2:0]
TIMER1	Full configuration	TIM1_CC[2:0]
TIMER2	Full configuration	TIM2_CC[2:0]
TIMER3	Full configuration	TIM3_CC[2:0]
RTC	Full configuration	NA
BURTC	Full configuration	NA
LETIMER0	Full configuration	LET0_O[1:0]
PCNT0	Full configuration, 16-bit count register	PCNT0_S[1:0]
PCNT1	Full configuration, 8-bit count register	PCNT1_S[1:0]
PCNT2	Full configuration, 8-bit count register	PCNT2_S[1:0]
ACMP0	Full configuration	ACMP0_CH[7:0], ACMP0_O
ACMP1	Full configuration	ACMP1_CH[7:0], ACMP1_O
VCMP	Full configuration	NA
ADC0	Full configuration	ADC0_CH[7:0]
DAC0	Full configuration	DAC0_OUT[1:0], DAC0_OUTxALT
OPAMP	Full configuration	Outputs: OPAMP_OUTx, OPAMP_OUTxALT, Inputs: OPAMP_Px, OPAMP_Nx
AES	Full configuration	NA

Module	Configuration	Pin Connections
GPIO	56 pins	Available pins are shown in 5.1.3 GPIO Pinout Overview

3.2.2 EFM32WG232

The following table describes device-specific implementation of the EFM32WG232 features.

Table 3.2. EFM32WG232 Configuration Summary

Module	Configuration	Pin Connections
Cortex-M4	Full configuration	NA
DBG	Full configuration	DBG_SWCLK, DBG_SWDIO, DBG_SWO
MSC	Full configuration	NA
DMA	Full configuration	NA
RMU	Full configuration	NA
EMU	Full configuration	NA
CMU	Full configuration	CMU_OUT0, CMU_OUT1
WDOG	Full configuration	NA
PRS	Full configuration	NA
I2C0	Full configuration	I2C0_SDA, I2C0_SCL
I2C1	Full configuration	I2C1_SDA, I2C1_SCL
USART0	Full configuration with IrDA	US0_TX, US0_RX. US0_CLK, US0_CS
USART1	Full configuration with I2S	US1_TX, US1_RX, US1_CLK, US1_CS
USART2	Full configuration with I2S	US2_TX, US2_RX, US2_CLK, US2_CS
LEUART0	Full configuration	LEU0_TX, LEU0_RX
LEUART1	Full configuration	LEU1_TX, LEU1_RX
TIMER0	Full configuration with DTI	TIM0_CC[2:0], TIM0_CDTI[2:0]
TIMER1	Full configuration	TIM1_CC[2:0]
TIMER2	Full configuration	TIM2_CC[2:0]
TIMER3	Full configuration	TIM3_CC[2:0]
RTC	Full configuration	NA
BURTC	Full configuration	NA
LETIMER0	Full configuration	LET0_O[1:0]
PCNT0	Full configuration, 16-bit count register	PCNT0_S[1:0]
PCNT1	Full configuration, 8-bit count register	PCNT1_S[1:0]
PCNT2	Full configuration, 8-bit count register	PCNT2_S[1:0]
ACMP0	Full configuration	ACMP0_CH[7:0], ACMP0_O
ACMP1	Full configuration	ACMP1_CH[7:0], ACMP1_O
VCMP	Full configuration	NA
ADC0	Full configuration	ADC0_CH[7:0]
DAC0	Full configuration	DAC0_OUT[1:0], DAC0_OUTxALT
OPAMP	Full configuration	Outputs: OPAMP_OUTx, OPAMP_OUTxALT, Inputs: OPAMP_Px, OPAMP_Nx
AES	Full configuration	NA

Module	Configuration	Pin Connections
GPIO	53 pins	Available pins are shown in 5.2.3 GPIO Pinout Overview

3.2.3 EFM32WG280

The following table describes device-specific implementation of the EFM32WG280 features.

Table 3.3. EFM32WG280 Configuration Summary

Module	Configuration	Pin Connections
Cortex-M4	Full configuration	NA
DBG	Full configuration	DBG_SWCLK, DBG_SWDIO, DBG_SWO
MSC	Full configuration	NA
DMA	Full configuration	NA
RMU	Full configuration	NA
EMU	Full configuration	NA
CMU	Full configuration	CMU_OUT0, CMU_OUT1
WDOG	Full configuration	NA
PRS	Full configuration	NA
EBI	Full configuration	EBI_A[27:0], EBI_AD[15:0], EBI_ARDY, EBI_ALE, EBI_BL[1:0], EBI_CS[3:0], EBI_CSTFT, EBI_DCLK, EBI_DTEN, EBI_HSNC, EBI_NANDREn, EBI_NANDWEn, EBI_REn, EBI_VSNC, EBI_WEn
I2C0	Full configuration	I2C0_SDA, I2C0_SCL
I2C1	Full configuration	I2C1_SDA, I2C1_SCL
USART0	Full configuration with IrDA	US0_TX, US0_RX. US0_CLK, US0_CS
USART1	Full configuration with I2S	US1_TX, US1_RX, US1_CLK, US1_CS
USART2	Full configuration with I2S	US2_TX, US2_RX, US2_CLK, US2_CS
UART0	Full configuration	U0_TX, U0_RX
UART1	Full configuration	U1_TX, U1_RX
LEUART0	Full configuration	LEU0_TX, LEU0_RX
LEUART1	Full configuration	LEU1_TX, LEU1_RX
TIMER0	Full configuration with DTI	TIM0_CC[2:0], TIM0_CDTI[2:0]
TIMER1	Full configuration	TIM1_CC[2:0]
TIMER2	Full configuration	TIM2_CC[2:0]
TIMER3	Full configuration	TIM3_CC[2:0]
RTC	Full configuration	NA
BURTC	Full configuration	NA
LETIMER0	Full configuration	LET0_O[1:0]
PCNT0	Full configuration, 16-bit count register	PCNT0_S[1:0]
PCNT1	Full configuration, 8-bit count register	PCNT1_S[1:0]
PCNT2	Full configuration, 8-bit count register	PCNT2_S[1:0]
ACMP0	Full configuration	ACMP0_CH[7:0], ACMP0_O
ACMP1	Full configuration	ACMP1_CH[7:0], ACMP1_O
VCMP	Full configuration	NA

Module	Configuration	Pin Connections
ADC0	Full configuration	ADC0_CH[7:0]
DAC0	Full configuration	DAC0_OUT[1:0], DAC0_OUTxALT
OPAMP	Full configuration	Outputs: OPAMP_OUTx, OPAMP_OUTxALT, Inputs: OPAMP_Px, OPAMP_Nx
AES	Full configuration	NA
GPIO	85 pins	Available pins are shown in 5.3.3 GPIO Pinout Overview

3.2.4 EFM32WG290

The following table describes device-specific implementation of the EFM32WG290 features.

Table 3.4. EFM32WG290 Configuration Summary

Module	Configuration	Pin Connections
Cortex-M4	Full configuration	NA
DBG	Full configuration	DBG_SWCLK, DBG_SWDIO, DBG_SWO
MSC	Full configuration	NA
DMA	Full configuration	NA
RMU	Full configuration	NA
EMU	Full configuration	NA
CMU	Full configuration	CMU_OUT0, CMU_OUT1
WDOG	Full configuration	NA
PRS	Full configuration	NA
EBI	Full configuration	EBI_A[27:0], EBI_AD[15:0], EBI_ARDY, EBI_ALE, EBI_BL[1:0], EBI_CS[3:0], EBI_CSTFT, EBI_DCLK, EBI_DTEN, EBI_HSNC, EBI_NANDREn, EBI_NANDWEn, EBI_REn, EBI_VSNC, EBI_WEn
I2C0	Full configuration	I2C0_SDA, I2C0_SCL
I2C1	Full configuration	I2C1_SDA, I2C1_SCL
USART0	Full configuration with IrDA	US0_TX, US0_RX. US0_CLK, US0_CS
USART1	Full configuration with I2S	US1_TX, US1_RX, US1_CLK, US1_CS
USART2	Full configuration with I2S	US2_TX, US2_RX, US2_CLK, US2_CS
UART0	Full configuration	U0_TX, U0_RX
UART1	Full configuration	U1_TX, U1_RX
LEUART0	Full configuration	LEU0_TX, LEU0_RX
LEUART1	Full configuration	LEU1_TX, LEU1_RX
TIMER0	Full configuration with DTI	TIM0_CC[2:0], TIM0_CDTI[2:0]
TIMER1	Full configuration	TIM1_CC[2:0]
TIMER2	Full configuration	TIM2_CC[2:0]
TIMER3	Full configuration	TIM3_CC[2:0]
RTC	Full configuration	NA
BURTC	Full configuration	NA
LETIMER0	Full configuration	LET0_O[1:0]
PCNT0	Full configuration, 16-bit count register	PCNT0_S[1:0]
PCNT1	Full configuration, 8-bit count register	PCNT1_S[1:0]
PCNT2	Full configuration, 8-bit count register	PCNT2_S[1:0]
ACMP0	Full configuration	ACMP0_CH[7:0], ACMP0_O
ACMP1	Full configuration	ACMP1_CH[7:0], ACMP1_O
VCMP	Full configuration	NA

Module	Configuration	Pin Connections
ADC0	Full configuration	ADC0_CH[7:0]
DAC0	Full configuration	DAC0_OUT[1:0], DAC0_OUTxALT
OPAMP	Full configuration	Outputs: OPAMP_OUTx, OPAMP_OUTxALT, Inputs: OPAMP_Px, OPAMP_Nx
AES	Full configuration	NA
GPIO	90 pins	Available pins are shown in 5.4.3 GPIO Pinout Overview

3.2.5 EFM32WG295

The following table describes device-specific implementation of the EFM32WG295 features.

Table 3.5. EFM32WG295 Configuration Summary

Module	Configuration	Pin Connections
Cortex-M4	Full configuration	NA
DBG	Full configuration	DBG_SWCLK, DBG_SWDIO, DBG_SWO
MSC	Full configuration	NA
DMA	Full configuration	NA
RMU	Full configuration	NA
EMU	Full configuration	NA
CMU	Full configuration	CMU_OUT0, CMU_OUT1
WDOG	Full configuration	NA
PRS	Full configuration	NA
EBI	Full configuration	EBI_A[27:0], EBI_AD[15:0], EBI_ARDY, EBI_ALE, EBI_BL[1:0], EBI_CS[3:0], EBI_CSTFT, EBI_DCLK, EBI_DTEN, EBI_HSNC, EBI_NANDREn, EBI_NANDWEn, EBI_REn, EBI_VSNC, EBI_WEn
I2C0	Full configuration	I2C0_SDA, I2C0_SCL
I2C1	Full configuration	I2C1_SDA, I2C1_SCL
USART0	Full configuration with IrDA	US0_TX, US0_RX. US0_CLK, US0_CS
USART1	Full configuration with I2S	US1_TX, US1_RX, US1_CLK, US1_CS
USART2	Full configuration with I2S	US2_TX, US2_RX, US2_CLK, US2_CS
UART0	Full configuration	U0_TX, U0_RX
UART1	Full configuration	U1_TX, U1_RX
LEUART0	Full configuration	LEU0_TX, LEU0_RX
LEUART1	Full configuration	LEU1_TX, LEU1_RX
TIMER0	Full configuration with DTI	TIM0_CC[2:0], TIM0_CDTI[2:0]
TIMER1	Full configuration	TIM1_CC[2:0]
TIMER2	Full configuration	TIM2_CC[2:0]
TIMER3	Full configuration	TIM3_CC[2:0]
RTC	Full configuration	NA
BURTC	Full configuration	NA
LETIMER0	Full configuration	LET0_O[1:0]
PCNT0	Full configuration, 16-bit count register	PCNT0_S[1:0]
PCNT1	Full configuration, 8-bit count register	PCNT1_S[1:0]
PCNT2	Full configuration, 8-bit count register	PCNT2_S[1:0]
ACMP0	Full configuration	ACMP0_CH[7:0], ACMP0_O
ACMP1	Full configuration	ACMP1_CH[7:0], ACMP1_O
VCMP	Full configuration	NA

Module	Configuration	Pin Connections
ADC0	Full configuration	ADC0_CH[7:0]
DAC0	Full configuration	DAC0_OUT[1:0], DAC0_OUTxALT
OPAMP	Full configuration	Outputs: OPAMP_OUTx, OPAMP_OUTxALT, Inputs: OPAMP_Px, OPAMP_Nx
AES	Full configuration	NA
GPIO	93 pins	Available pins are shown in 5.5.3 GPIO Pinout Overview

3.2.6 EFM32WG330

The following table describes device-specific implementation of the EFM32WG330 features.

Table 3.6. EFM32WG330 Configuration Summary

Module	Configuration	Pin Connections
Cortex-M4	Full configuration	NA
DBG	Full configuration	DBG_SWCLK, DBG_SWDIO, DBG_SWO
MSC	Full configuration	NA
DMA	Full configuration	NA
RMU	Full configuration	NA
EMU	Full configuration	NA
CMU	Full configuration	CMU_OUT0, CMU_OUT1
WDOG	Full configuration	NA
PRS	Full configuration	NA
USB	Full configuration	USB_VBUS, USB_VBUSEN, USB_VREGI, USB_VREGO, USB_DM, USB_DMPU, USB_DP, USB_ID
I2C0	Full configuration	I2C0_SDA, I2C0_SCL
I2C1	Full configuration	I2C1_SDA, I2C1_SCL
USART0	Full configuration with IrDA	US0_TX, US0_RX. US0_CLK, US0_CS
USART1	Full configuration with I2S	US1_TX, US1_RX, US1_CLK, US1_CS
USART2	Full configuration with I2S	US2_TX, US2_RX, US2_CLK, US2_CS
LEUART0	Full configuration	LEU0_TX, LEU0_RX
LEUART1	Full configuration	LEU1_TX, LEU1_RX
TIMER0	Full configuration with DTI	TIM0_CC[2:0], TIM0_CDTI[2:0]
TIMER1	Full configuration	TIM1_CC[2:0]
TIMER2	Full configuration	TIM2_CC[2:0]
TIMER3	Full configuration	TIM3_CC[2:0]
RTC	Full configuration	NA
BURTC	Full configuration	NA
LETIMER0	Full configuration	LET0_O[1:0]
PCNT0	Full configuration, 16-bit count register	PCNT0_S[1:0]
PCNT1	Full configuration, 8-bit count register	PCNT1_S[1:0]
PCNT2	Full configuration, 8-bit count register	PCNT2_S[1:0]
ACMP0	Full configuration	ACMP0_CH[7:0], ACMP0_O
ACMP1	Full configuration	ACMP1_CH[3:0], ACMP1_O
VCMP	Full configuration	NA
ADC0	Full configuration	ADC0_CH[7:0]
DAC0	Full configuration	DAC0_OUT[1:0], DAC0_OUTxALT

Module	Configuration	Pin Connections
OPAMP	Full configuration	Outputs: OPAMP_OUTx, OPAMP_OUTxALT, Inputs: OPAMP_Px, OPAMP_Nx
AES	Full configuration	NA
GPIO	53 pins	Available pins are shown in 5.6.3 GPIO Pinout Overview

3.2.7 EFM32WG332

The following table describes device-specific implementation of the EFM32WG332 features.

Table 3.7. EFM32WG332 Configuration Summary

Module	Configuration	Pin Connections
Cortex-M4	Full configuration	NA
DBG	Full configuration	DBG_SWCLK, DBG_SWDIO, DBG_SWO
MSC	Full configuration	NA
DMA	Full configuration	NA
RMU	Full configuration	NA
EMU	Full configuration	NA
CMU	Full configuration	CMU_OUT0, CMU_OUT1
WDOG	Full configuration	NA
PRS	Full configuration	NA
USB	Full configuration	USB_VBUS, USB_VBUSEN, USB_VREGI, USB_VREGO, USB_DM, USB_DMPU, USB_DP, USB_ID
I2C0	Full configuration	I2C0_SDA, I2C0_SCL
I2C1	Full configuration	I2C1_SDA, I2C1_SCL
USART0	Full configuration with IrDA	US0_TX, US0_RX. US0_CLK, US0_CS
USART1	Full configuration with I2S	US1_TX, US1_RX, US1_CLK, US1_CS
USART2	Full configuration with I2S	US2_TX, US2_RX, US2_CLK, US2_CS
LEUART0	Full configuration	LEU0_TX, LEU0_RX
LEUART1	Full configuration	LEU1_TX, LEU1_RX
TIMER0	Full configuration with DTI	TIM0_CC[2:0], TIM0_CDTI[2:0]
TIMER1	Full configuration	TIM1_CC[2:0]
TIMER2	Full configuration	TIM2_CC[2:0]
TIMER3	Full configuration	TIM3_CC[2:0]
RTC	Full configuration	NA
BURTC	Full configuration	NA
LETIMER0	Full configuration	LET0_O[1:0]
PCNT0	Full configuration, 16-bit count register	PCNT0_S[1:0]
PCNT1	Full configuration, 8-bit count register	PCNT1_S[1:0]
PCNT2	Full configuration, 8-bit count register	PCNT2_S[1:0]
ACMP0	Full configuration	ACMP0_CH[7:0], ACMP0_O
ACMP1	Full configuration	ACMP1_CH[3:0], ACMP1_O
VCMP	Full configuration	NA
ADC0	Full configuration	ADC0_CH[7:0]
DAC0	Full configuration	DAC0_OUT[1:0], DAC0_OUTxALT

Module	Configuration	Pin Connections
OPAMP	Full configuration	Outputs: OPAMP_OUTx, OPAMP_OUTxALT, Inputs: OPAMP_Px, OPAMP_Nx
AES	Full configuration	NA
GPIO	50 pins	Available pins are shown in 5.7.3 GPIO Pinout Overview

3.2.8 EFM32WG360

The following table describes device-specific implementation of the EFM32WG360 features.

Table 3.8. EFM32WG360 Configuration Summary

Module	Configuration	Pin Connections
Cortex-M4	Full configuration	NA
DBG	Full configuration	DBG_SWCLK, DBG_SWDIO, DBG_SWO
MSC	Full configuration	NA
DMA	Full configuration	NA
RMU	Full configuration	NA
EMU	Full configuration	NA
CMU	Full configuration	CMU_OUT0, CMU_OUT1
WDOG	Full configuration	NA
PRS	Full configuration	NA
USB	Full configuration	USB_VBUS, USB_VBUSEN, USB_VREGI, USB_VREGO, USB_DM, USB_DMPU, USB_DP, USB_ID
I2C0	Full configuration	I2C0_SDA, I2C0_SCL
I2C1	Full configuration	I2C1_SDA, I2C1_SCL
USART0	Full configuration with IrDA	US0_TX, US0_RX. US0_CLK, US0_CS
USART1	Full configuration with I2S	US1_TX, US1_RX, US1_CLK, US1_CS
USART2	Full configuration with I2S	US2_TX, US2_RX, US2_CLK, US2_CS
UART0	Full configuration	U0_TX, U0_RX
UART1	Full configuration	U1_TX, U1_RX
LEUART0	Full configuration	LEU0_TX, LEU0_RX
LEUART1	Full configuration	LEU1_TX, LEU1_RX
TIMER0	Full configuration with DTI	TIM0_CC[2:0], TIM0_CDTI[2:0]
TIMER1	Full configuration	TIM1_CC[2:0]
TIMER2	Full configuration	TIM2_CC[2:0]
TIMER3	Full configuration	TIM3_CC[2:0]
RTC	Full configuration	NA
BURTC	Full configuration	NA
LETIMER0	Full configuration	LET0_O[1:0]
PCNT0	Full configuration, 16-bit count register	PCNT0_S[1:0]
PCNT1	Full configuration, 8-bit count register	PCNT1_S[1:0]
PCNT2	Full configuration, 8-bit count register	PCNT2_S[1:0]
ACMP0	Full configuration	ACMP0_CH[7:0], ACMP0_O
ACMP1	Full configuration	ACMP1_CH[7:0], ACMP1_O
VCMP	Full configuration	NA
ADC0	Full configuration	ADC0_CH[7:0]

Module	Configuration	Pin Connections
DAC0	Full configuration	DAC0_OUT[1:0], DAC0_OUTxALT
OPAMP	Full configuration	Outputs: OPAMP_OUTx, OPAMP_OUTxALT, Inputs: OPAMP_Px, OPAMP_Nx
AES	Full configuration	NA
GPIO	65 pins	Available pins are shown in 5.8.3 GPIO Pinout Overview

3.2.9 EFM32WG380

The following table describes device-specific implementation of the EFM32WG380 features.

Table 3.9. EFM32WG380 Configuration Summary

Module	Configuration	Pin Connections
Cortex-M4	Full configuration	NA
DBG	Full configuration	DBG_SWCLK, DBG_SWDIO, DBG_SWO
MSC	Full configuration	NA
DMA	Full configuration	NA
RMU	Full configuration	NA
EMU	Full configuration	NA
CMU	Full configuration	CMU_OUT0, CMU_OUT1
WDOG	Full configuration	NA
PRS	Full configuration	NA
USB	Full configuration	USB_VBUS, USB_VBUSEN, USB_VREGI, USB_VREGO, USB_DM, USB_DMPU, USB_DP, USB_ID
EBI	Full configuration	EBI_A[27:0], EBI_AD[15:0], EBI_ARDY, EBI_ALE, EBI_BL[1:0], EBI_CS[3:0], EBI_CSTFT, EBI_DCLK, EBI_DTEN, EBI_HSNC, EBI_NANDREn, EBI_NANDWEn, EBI_REn, EBI_VSNC, EBI_WEn
I2C0	Full configuration	I2C0_SDA, I2C0_SCL
I2C1	Full configuration	I2C1_SDA, I2C1_SCL
USART0	Full configuration with IrDA	US0_TX, US0_RX. US0_CLK, US0_CS
USART1	Full configuration with I2S	US1_TX, US1_RX, US1_CLK, US1_CS
USART2	Full configuration with I2S	US2_TX, US2_RX, US2_CLK, US2_CS
UART0	Full configuration	U0_TX, U0_RX
UART1	Full configuration	U1_TX, U1_RX
LEUART0	Full configuration	LEU0_TX, LEU0_RX
LEUART1	Full configuration	LEU1_TX, LEU1_RX
TIMER0	Full configuration with DTI	TIM0_CC[2:0], TIM0_CDTI[2:0]
TIMER1	Full configuration	TIM1_CC[2:0]
TIMER2	Full configuration	TIM2_CC[2:0]
TIMER3	Full configuration	TIM3_CC[2:0]
RTC	Full configuration	NA
BURTC	Full configuration	NA
LETIMER0	Full configuration	LET0_O[1:0]
PCNT0	Full configuration, 16-bit count register	PCNT0_S[1:0]
PCNT1	Full configuration, 8-bit count register	PCNT1_S[1:0]
PCNT2	Full configuration, 8-bit count register	PCNT2_S[1:0]
ACMP0	Full configuration	ACMP0_CH[7:0], ACMP0_O

Module	Configuration	Pin Connections
ACMP1	Full configuration	ACMP1_CH[3:0], ACMP1_O
VCMP	Full configuration	NA
ADC0	Full configuration	ADC0_CH[7:0]
DAC0	Full configuration	DAC0_OUT[1:0], DAC0_OUTxALT
OPAMP	Full configuration	Outputs: OPAMP_OUTx, OPAMP_OUTxALT, Inputs: OPAMP_Px, OPAMP_Nx
AES	Full configuration	NA
GPIO	83 pins	Available pins are shown in 5.9.3 GPIO Pinout Overview

3.2.10 EFM32WG390

The following table describes device-specific implementation of the EFM32WG390 features.

Table 3.10. EFM32WG390 Configuration Summary

Module	Configuration	Pin Connections
Cortex-M4	Full configuration	NA
DBG	Full configuration	DBG_SWCLK, DBG_SWDIO, DBG_SWO
MSC	Full configuration	NA
DMA	Full configuration	NA
RMU	Full configuration	NA
EMU	Full configuration	NA
CMU	Full configuration	CMU_OUT0, CMU_OUT1
WDOG	Full configuration	NA
PRS	Full configuration	NA
USB	Full configuration	USB_VBUS, USB_VBUSEN, USB_VREGI, USB_VREGO, USB_DM, USB_DMPU, USB_DP, USB_ID
EBI	Full configuration	EBI_A[27:0], EBI_AD[15:0], EBI_ARDY, EBI_ALE, EBI_BL[1:0], EBI_CS[3:0], EBI_CSTFT, EBI_DCLK, EBI_DTEN, EBI_HSNC, EBI_NANDREn, EBI_NANDWEn, EBI_REn, EBI_VSNC, EBI_WEn
I2C0	Full configuration	I2C0_SDA, I2C0_SCL
I2C1	Full configuration	I2C1_SDA, I2C1_SCL
USART0	Full configuration with IrDA	US0_TX, US0_RX. US0_CLK, US0_CS
USART1	Full configuration with I2S	US1_TX, US1_RX, US1_CLK, US1_CS
USART2	Full configuration with I2S	US2_TX, US2_RX, US2_CLK, US2_CS
UART0	Full configuration	U0_TX, U0_RX
UART1	Full configuration	U1_TX, U1_RX
LEUART0	Full configuration	LEU0_TX, LEU0_RX
LEUART1	Full configuration	LEU1_TX, LEU1_RX
TIMER0	Full configuration with DTI	TIM0_CC[2:0], TIM0_CDTI[2:0]
TIMER1	Full configuration	TIM1_CC[2:0]
TIMER2	Full configuration	TIM2_CC[2:0]
TIMER3	Full configuration	TIM3_CC[2:0]
RTC	Full configuration	NA
BURTC	Full configuration	NA
LETIMER0	Full configuration	LET0_O[1:0]
PCNT0	Full configuration, 16-bit count register	PCNT0_S[1:0]
PCNT1	Full configuration, 8-bit count register	PCNT1_S[1:0]
PCNT2	Full configuration, 8-bit count register	PCNT2_S[1:0]
ACMP0	Full configuration	ACMP0_CH[7:0], ACMP0_O

Module	Configuration	Pin Connections
ACMP1	Full configuration	ACMP1_CH[3:0], ACMP1_O
VCMP	Full configuration	NA
ADC0	Full configuration	ADC0_CH[7:0]
DAC0	Full configuration	DAC0_OUT[1:0], DAC0_OUTxALT
OPAMP	Full configuration	Outputs: OPAMP_OUTx, OPAMP_OUTxALT, Inputs: OPAMP_Px, OPAMP_Nx
AES	Full configuration	NA
GPIO	86 pins	Available pins are shown in 5.10.3 GPIO Pinout Overview

3.2.11 EFM32WG395

The following table describes device-specific implementation of the EFM32WG395 features.

Table 3.11. EFM32WG395 Configuration Summary

Module	Configuration	Pin Connections
Cortex-M4	Full configuration	NA
DBG	Full configuration	DBG_SWCLK, DBG_SWDIO, DBG_SWO
MSC	Full configuration	NA
DMA	Full configuration	NA
RMU	Full configuration	NA
EMU	Full configuration	NA
CMU	Full configuration	CMU_OUT0, CMU_OUT1
WDOG	Full configuration	NA
PRS	Full configuration	NA
USB	Full configuration	USB_VBUS, USB_VBUSEN, USB_VREGI, USB_VREGO, USB_DM, USB_DMPU, USB_DP, USB_ID
EBI	Full configuration	EBI_A[27:0], EBI_AD[15:0], EBI_ARDY, EBI_ALE, EBI_BL[1:0], EBI_CS[3:0], EBI_CSTFT, EBI_DCLK, EBI_DTEN, EBI_HSNC, EBI_NANDREn, EBI_NANDWEn, EBI_REn, EBI_VSNC, EBI_WEn
I2C0	Full configuration	I2C0_SDA, I2C0_SCL
I2C1	Full configuration	I2C1_SDA, I2C1_SCL
USART0	Full configuration with IrDA	US0_TX, US0_RX. US0_CLK, US0_CS
USART1	Full configuration with I2S	US1_TX, US1_RX, US1_CLK, US1_CS
USART2	Full configuration with I2S	US2_TX, US2_RX, US2_CLK, US2_CS
UART0	Full configuration	U0_TX, U0_RX
UART1	Full configuration	U1_TX, U1_RX
LEUART0	Full configuration	LEU0_TX, LEU0_RX
LEUART1	Full configuration	LEU1_TX, LEU1_RX
TIMER0	Full configuration with DTI	TIM0_CC[2:0], TIM0_CDTI[2:0]
TIMER1	Full configuration	TIM1_CC[2:0]
TIMER2	Full configuration	TIM2_CC[2:0]
TIMER3	Full configuration	TIM3_CC[2:0]
RTC	Full configuration	NA
BURTC	Full configuration	NA
LETIMER0	Full configuration	LET0_O[1:0]
PCNT0	Full configuration, 16-bit count register	PCNT0_S[1:0]
PCNT1	Full configuration, 8-bit count register	PCNT1_S[1:0]
PCNT2	Full configuration, 8-bit count register	PCNT2_S[1:0]
ACMP0	Full configuration	ACMP0_CH[7:0], ACMP0_O

Module	Configuration	Pin Connections
ACMP1	Full configuration	ACMP1_CH[7:0], ACMP1_O
VCMP	Full configuration	NA
ADC0	Full configuration	ADC0_CH[7:0]
DAC0	Full configuration	DAC0_OUT[1:0], DAC0_OUTxALT
OPAMP	Full configuration	Outputs: OPAMP_OUTx, OPAMP_OUTxALT, Inputs: OPAMP_Px, OPAMP_Nx
AES	Full configuration	NA
GPIO	93 pins	Available pins are shown in 5.11.3 GPIO Pinout Overview

3.2.12 EFM32WG840

The following table describes device-specific implementation of the EFM32WG840 features.

Table 3.12. EFM32WG840 Configuration Summary

Module	Configuration	Pin Connections
Cortex-M4	Full configuration	NA
DBG	Full configuration	DBG_SWCLK, DBG_SWDIO, DBG_SWO
MSC	Full configuration	NA
DMA	Full configuration	NA
RMU	Full configuration	NA
EMU	Full configuration	NA
CMU	Full configuration	CMU_OUT0, CMU_OUT1
WDOG	Full configuration	NA
PRS	Full configuration	NA
I2C0	Full configuration	I2C0_SDA, I2C0_SCL
I2C1	Full configuration	I2C1_SDA, I2C1_SCL
USART0	Full configuration with IrDA	US0_TX, US0_RX. US0_CLK, US0_CS
USART1	Full configuration with I2S	US1_TX, US1_RX, US1_CLK, US1_CS
USART2	Full configuration with I2S	US2_TX, US2_RX, US2_CLK, US2_CS
LEUART0	Full configuration	LEU0_TX, LEU0_RX
LEUART1	Full configuration	LEU1_TX, LEU1_RX
TIMER0	Full configuration with DTI	TIM0_CC[2:0], TIM0_CDTI[2:0]
TIMER1	Full configuration	TIM1_CC[2:0]
TIMER2	Full configuration	TIM2_CC[2:0]
TIMER3	Full configuration	TIM3_CC[2:0]
RTC	Full configuration	NA
BURTC	Full configuration	NA
LETIMER0	Full configuration	LET0_O[1:0]
PCNT0	Full configuration, 16-bit count register	PCNT0_S[1:0]
PCNT1	Full configuration, 8-bit count register	PCNT1_S[1:0]
PCNT2	Full configuration, 8-bit count register	PCNT2_S[1:0]
ACMP0	Full configuration	ACMP0_CH[7:4], ACMP0_O
ACMP1	Full configuration	ACMP1_CH[7:4], ACMP1_O
VCMP	Full configuration	NA
ADC0	Full configuration	ADC0_CH[7:0]
DAC0	Full configuration	DAC0_OUT[1:0], DAC0_OUTxALT
OPAMP	Full configuration	Outputs: OPAMP_OUTx, OPAMP_OUTxALT, Inputs: OPAMP_Px, OPAMP_Nx
AES	Full configuration	NA

Module	Configuration	Pin Connections
GPIO	56 pins	Available pins are shown in 5.12.3 GPIO Pinout Overview
LCD	Full configuration	LCD_SEG[19:0], LCD_COM[7:0], LCD_BCAP_P, LCD_BCAP_N, LCD_BEXT

3.2.13 EFM32WG842

The following table describes device-specific implementation of the EFM32WG842 features.

Table 3.13. EFM32WG842 Configuration Summary

Module	Configuration	Pin Connections
Cortex-M4	Full configuration	NA
DBG	Full configuration	DBG_SWCLK, DBG_SWDIO, DBG_SWO
MSC	Full configuration	NA
DMA	Full configuration	NA
RMU	Full configuration	NA
EMU	Full configuration	NA
CMU	Full configuration	CMU_OUT0, CMU_OUT1
WDOG	Full configuration	NA
PRS	Full configuration	NA
I2C0	Full configuration	I2C0_SDA, I2C0_SCL
I2C1	Full configuration	I2C1_SDA, I2C1_SCL
USART0	Full configuration with IrDA	US0_TX, US0_RX. US0_CLK, US0_CS
USART1	Full configuration with I2S	US1_TX, US1_RX, US1_CLK, US1_CS
USART2	Full configuration with I2S	US2_TX, US2_RX, US2_CLK, US2_CS
LEUART0	Full configuration	LEU0_TX, LEU0_RX
LEUART1	Full configuration	LEU1_TX, LEU1_RX
TIMER0	Full configuration with DTI	TIM0_CC[2:0], TIM0_CDTI[2:0]
TIMER1	Full configuration	TIM1_CC[2:0]
TIMER2	Full configuration	TIM2_CC[2:0]
TIMER3	Full configuration	TIM3_CC[2:0]
RTC	Full configuration	NA
BURTC	Full configuration	NA
LETIMER0	Full configuration	LET0_O[1:0]
PCNT0	Full configuration, 16-bit count register	PCNT0_S[1:0]
PCNT1	Full configuration, 8-bit count register	PCNT1_S[1:0]
PCNT2	Full configuration, 8-bit count register	PCNT2_S[1:0]
ACMP0	Full configuration	ACMP0_CH[7:4], ACMP0_O
ACMP1	Full configuration	ACMP1_CH[7:4], ACMP1_O
VCMP	Full configuration	NA
ADC0	Full configuration	ADC0_CH[7:0]
DAC0	Full configuration	DAC0_OUT[1:0], DAC0_OUTxALT
OPAMP	Full configuration	Outputs: OPAMP_OUTx, OPAMP_OUTxALT, Inputs: OPAMP_Px, OPAMP_Nx
AES	Full configuration	NA

Module	Configuration	Pin Connections
GPIO	53 pins	Available pins are shown in 5.13.3 GPIO Pinout Overview
LCD	Full configuration	LCD_SEG[17:0], LCD_COM[7:0], LCD_BCAP_P, LCD_BCAP_N, LCD_BEXT

3.2.14 EFM32WG880

The following table describes device-specific implementation of the EFM32WG880 features.

Table 3.14. EFM32WG880 Configuration Summary

Module	Configuration	Pin Connections
Cortex-M4	Full configuration	NA
DBG	Full configuration	DBG_SWCLK, DBG_SWDIO, DBG_SWO
MSC	Full configuration	NA
DMA	Full configuration	NA
RMU	Full configuration	NA
EMU	Full configuration	NA
CMU	Full configuration	CMU_OUT0, CMU_OUT1
WDOG	Full configuration	NA
PRS	Full configuration	NA
EBI	Full configuration	EBI_A[27:0], EBI_AD[15:0], EBI_ARDY, EBI_ALE, EBI_BL[1:0], EBI_CS[3:0], EBI_CSTFT, EBI_DCLK, EBI_DTEN, EBI_HSNC, EBI_NANDREn, EBI_NANDWEn, EBI_REn, EBI_VSNC, EBI_WEn
I2C0	Full configuration	I2C0_SDA, I2C0_SCL
I2C1	Full configuration	I2C1_SDA, I2C1_SCL
USART0	Full configuration with IrDA	US0_TX, US0_RX. US0_CLK, US0_CS
USART1	Full configuration with I2S	US1_TX, US1_RX, US1_CLK, US1_CS
USART2	Full configuration with I2S	US2_TX, US2_RX, US2_CLK, US2_CS
UART0	Full configuration	U0_TX, U0_RX
UART1	Full configuration	U1_TX, U1_RX
LEUART0	Full configuration	LEU0_TX, LEU0_RX
LEUART1	Full configuration	LEU1_TX, LEU1_RX
TIMER0	Full configuration with DTI	TIM0_CC[2:0], TIM0_CDTI[2:0]
TIMER1	Full configuration	TIM1_CC[2:0]
TIMER2	Full configuration	TIM2_CC[2:0]
TIMER3	Full configuration	TIM3_CC[2:0]
RTC	Full configuration	NA
BURTC	Full configuration	NA
LETIMER0	Full configuration	LET0_O[1:0]
PCNT0	Full configuration, 16-bit count register	PCNT0_S[1:0]
PCNT1	Full configuration, 8-bit count register	PCNT1_S[1:0]
PCNT2	Full configuration, 8-bit count register	PCNT2_S[1:0]
ACMP0	Full configuration	ACMP0_CH[7:0], ACMP0_O
ACMP1	Full configuration	ACMP1_CH[7:0], ACMP1_O
VCMP	Full configuration	NA

Module	Configuration	Pin Connections
ADC0	Full configuration	ADC0_CH[7:0]
DAC0	Full configuration	DAC0_OUT[1:0], DAC0_OUTxALT
OPAMP	Full configuration	Outputs: OPAMP_OUTx, OPAMP_OUTxALT, Inputs: OPAMP_Px, OPAMP_Nx
AES	Full configuration	NA
GPIO	85 pins	Available pins are shown in 5.14.3 GPIO Pinout Overview
LCD	Full configuration	LCD_SEG[35:0], LCD_COM[7:0], LCD_BCAP_P, LCD_BCAP_N, LCD_BEXT

3.2.15 EFM32WG890

The following table describes device-specific implementation of the EFM32WG890 features.

Table 3.15. EFM32WG890 Configuration Summary

Module	Configuration	Pin Connections
Cortex-M4	Full configuration	NA
DBG	Full configuration	DBG_SWCLK, DBG_SWDIO, DBG_SWO
MSC	Full configuration	NA
DMA	Full configuration	NA
RMU	Full configuration	NA
EMU	Full configuration	NA
CMU	Full configuration	CMU_OUT0, CMU_OUT1
WDOG	Full configuration	NA
PRS	Full configuration	NA
EBI	Full configuration	EBI_A[27:0], EBI_AD[15:0], EBI_ARDY, EBI_ALE, EBI_BL[1:0], EBI_CS[3:0], EBI_CSTFT, EBI_DCLK, EBI_DTEN, EBI_HSNC, EBI_NANDREn, EBI_NANDWEn, EBI_REn, EBI_VSNC, EBI_WEn
I2C0	Full configuration	I2C0_SDA, I2C0_SCL
I2C1	Full configuration	I2C1_SDA, I2C1_SCL
USART0	Full configuration with IrDA	US0_TX, US0_RX. US0_CLK, US0_CS
USART1	Full configuration with I2S	US1_TX, US1_RX, US1_CLK, US1_CS
USART2	Full configuration with I2S	US2_TX, US2_RX, US2_CLK, US2_CS
UART0	Full configuration	U0_TX, U0_RX
UART1	Full configuration	U1_TX, U1_RX
LEUART0	Full configuration	LEU0_TX, LEU0_RX
LEUART1	Full configuration	LEU1_TX, LEU1_RX
TIMER0	Full configuration with DTI	TIM0_CC[2:0], TIM0_CDTI[2:0]
TIMER1	Full configuration	TIM1_CC[2:0]
TIMER2	Full configuration	TIM2_CC[2:0]
TIMER3	Full configuration	TIM3_CC[2:0]
RTC	Full configuration	NA
BURTC	Full configuration	NA
LETIMER0	Full configuration	LET0_O[1:0]
PCNT0	Full configuration, 16-bit count register	PCNT0_S[1:0]
PCNT1	Full configuration, 8-bit count register	PCNT1_S[1:0]
PCNT2	Full configuration, 8-bit count register	PCNT2_S[1:0]
ACMP0	Full configuration	ACMP0_CH[7:0], ACMP0_O
ACMP1	Full configuration	ACMP1_CH[7:0], ACMP1_O
VCMP	Full configuration	NA

Module	Configuration	Pin Connections
ADC0	Full configuration	ADC0_CH[7:0]
DAC0	Full configuration	DAC0_OUT[1:0], DAC0_OUTxALT
OPAMP	Full configuration	Outputs: OPAMP_OUTx, OPAMP_OUTxALT, Inputs: OPAMP_Px, OPAMP_Nx
AES	Full configuration	NA
GPIO	90 pins	Available pins are shown in 5.15.3 GPIO Pinout Overview
LCD	Full configuration	LCD_SEG[35:0], LCD_COM[7:0], LCD_BCAP_P, LCD_BCAP_N, LCD_BEXT

3.2.16 EFM32WG895

The following table describes device-specific implementation of the EFM32WG895 features.

Table 3.16. EFM32WG895 Configuration Summary

Module	Configuration	Pin Connections
Cortex-M4	Full configuration	NA
DBG	Full configuration	DBG_SWCLK, DBG_SWDIO, DBG_SWO
MSC	Full configuration	NA
DMA	Full configuration	NA
RMU	Full configuration	NA
EMU	Full configuration	NA
CMU	Full configuration	CMU_OUT0, CMU_OUT1
WDOG	Full configuration	NA
PRS	Full configuration	NA
EBI	Full configuration	EBI_A[27:0], EBI_AD[15:0], EBI_ARDY, EBI_ALE, EBI_BL[1:0], EBI_CS[3:0], EBI_CSTFT, EBI_DCLK, EBI_DTEN, EBI_HSNC, EBI_NANDREn, EBI_NANDWEn, EBI_REn, EBI_VSNC, EBI_WEn
I2C0	Full configuration	I2C0_SDA, I2C0_SCL
I2C1	Full configuration	I2C1_SDA, I2C1_SCL
USART0	Full configuration with IrDA	US0_TX, US0_RX. US0_CLK, US0_CS
USART1	Full configuration with I2S	US1_TX, US1_RX, US1_CLK, US1_CS
USART2	Full configuration with I2S	US2_TX, US2_RX, US2_CLK, US2_CS
UART0	Full configuration	U0_TX, U0_RX
UART1	Full configuration	U1_TX, U1_RX
LEUART0	Full configuration	LEU0_TX, LEU0_RX
LEUART1	Full configuration	LEU1_TX, LEU1_RX
TIMER0	Full configuration with DTI	TIM0_CC[2:0], TIM0_CDTI[2:0]
TIMER1	Full configuration	TIM1_CC[2:0]
TIMER2	Full configuration	TIM2_CC[2:0]
TIMER3	Full configuration	TIM3_CC[2:0]
RTC	Full configuration	NA
BURTC	Full configuration	NA
LETIMER0	Full configuration	LET0_O[1:0]
PCNT0	Full configuration, 16-bit count register	PCNT0_S[1:0]
PCNT1	Full configuration, 8-bit count register	PCNT1_S[1:0]
PCNT2	Full configuration, 8-bit count register	PCNT2_S[1:0]
ACMP0	Full configuration	ACMP0_CH[7:0], ACMP0_O
ACMP1	Full configuration	ACMP1_CH[7:0], ACMP1_O
VCMP	Full configuration	NA

Module	Configuration	Pin Connections
ADC0	Full configuration	ADC0_CH[7:0]
DAC0	Full configuration	DAC0_OUT[1:0], DAC0_OUTxALT
OPAMP	Full configuration	Outputs: OPAMP_OUTx, OPAMP_OUTxALT, Inputs: OPAMP_Px, OPAMP_Nx
AES	Full configuration	NA
GPIO	93 pins	Available pins are shown in Table 4.3 (p. 70)
LCD	Full configuration	LCD_SEG[35:0], LCD_COM[7:0], LCD_BCAP_P, LCD_BCAP_N, LCD_BEXT

3.2.17 EFM32WG900

The following table describes device-specific implementation of the EFM32WG900 features.

Table 3.17. EFM32WG900 Configuration Summary

Module	Configuration	Pin Connections
Cortex-M4	Full configuration	NA
DBG	Full configuration	DBG_SWCLK, DBG_SWDIO, DBG_SWO
MSC	Full configuration	NA
DMA	Full configuration	NA
RMU	Full configuration	NA
EMU	Full configuration	NA
CMU	Full configuration	CMU_OUT0, CMU_OUT1
WDOG	Full configuration	NA
PRS	Full configuration	NA
USB	Full configuration	USB_VBUS, USB_VBUSEN, USB_VREGI, USB_VREGO, USB_DM, USB_DMPU, USB_DP, USB_ID
EBI	Full configuration	EBI_A[27:0], EBI_AD[15:0], EBI_ARDY, EBI_ALE, EBI_BL[1:0], EBI_CS[3:0], EBI_CSTFT, EBI_DCLK, EBI_DTEN, EBI_HSNC, EBI_NANDREn, EBI_NAND-WEn, EBI_REn, EBI_VSNC, EBI_WEn
I2C0	Full configuration	I2C0_SDA, I2C0_SCL
I2C1	Full configuration	I2C1_SDA, I2C1_SCL
USART0	Full configuration with IrDA	US0_TX, US0_RX. US0_CLK, US0_CS
USART1	Full configuration with I2S	US1_TX, US1_RX, US1_CLK, US1_CS
USART2	Full configuration with I2S	US2_TX, US2_RX, US2_CLK, US2_CS
UART0	Full configuration	U0_TX, U0_RX
UART1	Full configuration	U1_TX, U1_RX
LEUART0	Full configuration	LEU0_TX, LEU0_RX
LEUART1	Full configuration	LEU1_TX, LEU1_RX
TIMER0	Full configuration with DTI	TIM0_CC[2:0], TIM0_CDTI[2:0]
TIMER1	Full configuration	TIM1_CC[2:0]
TIMER2	Full configuration	TIM2_CC[2:0]
TIMER3	Full configuration	TIM3_CC[2:0]
RTC	Full configuration	NA
BURTC	Full configuration	NA
LETIMER0	Full configuration	LET0_O[1:0]
PCNT0	Full configuration, 16-bit count register	PCNT0_S[1:0]
PCNT1	Full configuration, 8-bit count register	PCNT1_S[1:0]
PCNT2	Full configuration, 8-bit count register	PCNT2_S[1:0]
ACMP0	Full configuration	ACMP0_CH[7:0], ACMP0_O

Module	Configuration	Pin Connections
ACMP1	Full configuration	ACMP1_CH[7:0], ACMP1_O
VCMP	Full configuration	NA
ADC0	Full configuration	ADC0_CH[7:0]
DAC0	Full configuration	DAC0_OUT[1:0], DAC0_OUTxALT
OPAMP	Full configuration	Outputs: OPAMP_OUTx, OPAMP_OUTxALT, Inputs: OPAMP_Px, OPAMP_Nx
AES	Full configuration	NA
GPIO	93 pins	Available pins are shown in 5.17.3 GPIO Pinout Overview
LCD	Full configuration	LCD_SEG[35:0], LCD_COM[7:0], LCD_BCAP_P, LCD_BCAP_N, LCD_BEXT

3.2.18 EFM32WG940

The following table describes device-specific implementation of the EFM32WG940 features.

Table 3.18. EFM32WG940 Configuration Summary

Module	Configuration	Pin Connections
Cortex-M4	Full configuration	NA
DBG	Full configuration	DBG_SWCLK, DBG_SWDIO, DBG_SWO
MSC	Full configuration	NA
DMA	Full configuration	NA
RMU	Full configuration	NA
EMU	Full configuration	NA
CMU	Full configuration	CMU_OUT0, CMU_OUT1
WDOG	Full configuration	NA
PRS	Full configuration	NA
USB	Full configuration	USB_VBUS, USB_VBUSEN, USB_VREGI, USB_VREGO, USB_DM, USB_DMPU, USB_DP, USB_ID
I2C0	Full configuration	I2C0_SDA, I2C0_SCL
I2C1	Full configuration	I2C1_SDA, I2C1_SCL
USART0	Full configuration with IrDA	US0_TX, US0_RX. US0_CLK, US0_CS
USART1	Full configuration with I2S	US1_TX, US1_RX, US1_CLK, US1_CS
USART2	Full configuration with I2S	US2_TX, US2_RX, US2_CLK, US2_CS
LEUART0	Full configuration	LEU0_TX, LEU0_RX
LEUART1	Full configuration	LEU1_TX, LEU1_RX
TIMER0	Full configuration with DTI	TIM0_CC[2:0], TIM0_CDTI[2:0]
TIMER1	Full configuration	TIM1_CC[2:0]
TIMER2	Full configuration	TIM2_CC[2:0]
TIMER3	Full configuration	TIM3_CC[2:0]
RTC	Full configuration	NA
BURTC	Full configuration	NA
LETIMER0	Full configuration	LET0_O[1:0]
PCNT0	Full configuration, 16-bit count register	PCNT0_S[1:0]
PCNT1	Full configuration, 8-bit count register	PCNT1_S[1:0]
PCNT2	Full configuration, 8-bit count register	PCNT2_S[1:0]
ACMP0	Full configuration	ACMP0_CH[7:4], ACMP0_O
ACMP1	Full configuration	ACMP1_O
VCMP	Full configuration	NA
ADC0	Full configuration	ADC0_CH[7:0]
DAC0	Full configuration	DAC0_OUT[1:0], DAC0_OUTxALT

Module	Configuration	Pin Connections
OPAMP	Full configuration	Outputs: OPAMP_OUTx, OPAMP_OUTxALT, Inputs: OPAMP_Px, OPAMP_Nx
AES	Full configuration	NA
GPIO	53 pins	Available pins are shown in 5.18.3 GPIO Pinout Overview
LCD	Full configuration	LCD_SEG[17:0], LCD_COM[7:0], LCD_BCAP_P, LCD_BCAP_N, LCD_BEXT

3.2.19 EFM32WG942

The following table describes device-specific implementation of the EFM32WG942 features.

Table 3.19. EFM32WG942 Configuration Summary

Module	Configuration	Pin Connections
Cortex-M4	Full configuration	NA
DBG	Full configuration	DBG_SWCLK, DBG_SWDIO, DBG_SWO
MSC	Full configuration	NA
DMA	Full configuration	NA
RMU	Full configuration	NA
EMU	Full configuration	NA
CMU	Full configuration	CMU_OUT0, CMU_OUT1
WDOG	Full configuration	NA
PRS	Full configuration	NA
USB	Full configuration	USB_VBUS, USB_VBUSEN, USB_VREGI, USB_VREGO, USB_DM, USB_DMPU, USB_DP, USB_ID
I2C0	Full configuration	I2C0_SDA, I2C0_SCL
I2C1	Full configuration	I2C1_SDA, I2C1_SCL
USART0	Full configuration with IrDA	US0_TX, US0_RX. US0_CLK, US0_CS
USART1	Full configuration with I2S	US1_TX, US1_RX, US1_CLK, US1_CS
USART2	Full configuration with I2S	US2_TX, US2_RX, US2_CLK, US2_CS
LEUART0	Full configuration	LEU0_TX, LEU0_RX
LEUART1	Full configuration	LEU1_TX, LEU1_RX
TIMER0	Full configuration with DTI	TIM0_CC[2:0], TIM0_CDTI[2:0]
TIMER1	Full configuration	TIM1_CC[2:0]
TIMER2	Full configuration	TIM2_CC[2:0]
TIMER3	Full configuration	TIM3_CC[2:0]
RTC	Full configuration	NA
BURTC	Full configuration	NA
LETIMER0	Full configuration	LET0_O[1:0]
PCNT0	Full configuration, 16-bit count register	PCNT0_S[1:0]
PCNT1	Full configuration, 8-bit count register	PCNT1_S[1:0]
PCNT2	Full configuration, 8-bit count register	PCNT2_S[1:0]
ACMP0	Full configuration	ACMP0_CH[7:4], ACMP0_O
ACMP1	Full configuration	ACMP1_O
VCMP	Full configuration	NA
ADC0	Full configuration	ADC0_CH[7:0]
DAC0	Full configuration	DAC0_OUT[1:0], DAC0_OUTxALT

Module	Configuration	Pin Connections
OPAMP	Full configuration	Outputs: OPAMP_OUTx, OPAMP_OUTxALT, Inputs: OPAMP_Px, OPAMP_Nx
AES	Full configuration	NA
GPIO	50 pins	Available pins are shown in 5.19.3 GPIO Pinout Overview
LCD	Full configuration	LCD_SEG[15:0], LCD_COM[7:0], LCD_BCAP_P, LCD_BCAP_N, LCD_BEXT

3.2.20 EFM32WG980

The following table describes device-specific implementation of the EFM32WG980 features.

Table 3.20. EFM32WG980 Configuration Summary

Module	Configuration	Pin Connections
Cortex-M4	Full configuration	NA
DBG	Full configuration	DBG_SWCLK, DBG_SWDIO, DBG_SWO
MSC	Full configuration	NA
DMA	Full configuration	NA
RMU	Full configuration	NA
EMU	Full configuration	NA
CMU	Full configuration	CMU_OUT0, CMU_OUT1
WDOG	Full configuration	NA
PRS	Full configuration	NA
USB	Full configuration	USB_VBUS, USB_VBUSEN, USB_VREGI, USB_VREGO, USB_DM, USB_DMPU, USB_DP, USB_ID
EBI	Full configuration	EBI_A[27:0], EBI_AD[15:0], EBI_ARDY, EBI_ALE, EBI_BL[1:0], EBI_CS[3:0], EBI_CSTFT, EBI_DCLK, EBI_DTEN, EBI_HSNC, EBI_NANDREn, EBI_NANDWEn, EBI_REn, EBI_VSNC, EBI_WEn
I2C0	Full configuration	I2C0_SDA, I2C0_SCL
I2C1	Full configuration	I2C1_SDA, I2C1_SCL
USART0	Full configuration with IrDA	US0_TX, US0_RX. US0_CLK, US0_CS
USART1	Full configuration with I2S	US1_TX, US1_RX, US1_CLK, US1_CS
USART2	Full configuration with I2S	US2_TX, US2_RX, US2_CLK, US2_CS
UART0	Full configuration	U0_TX, U0_RX
UART1	Full configuration	U1_TX, U1_RX
LEUART0	Full configuration	LEU0_TX, LEU0_RX
LEUART1	Full configuration	LEU1_TX, LEU1_RX
TIMER0	Full configuration with DTI	TIM0_CC[2:0], TIM0_CDTI[2:0]
TIMER1	Full configuration	TIM1_CC[2:0]
TIMER2	Full configuration	TIM2_CC[2:0]
TIMER3	Full configuration	TIM3_CC[2:0]
RTC	Full configuration	NA
BURTC	Full configuration	NA
LETIMER0	Full configuration	LET0_O[1:0]
PCNT0	Full configuration, 16-bit count register	PCNT0_S[1:0]
PCNT1	Full configuration, 8-bit count register	PCNT1_S[1:0]
PCNT2	Full configuration, 8-bit count register	PCNT2_S[1:0]
ACMP0	Full configuration	ACMP0_CH[7:0], ACMP0_O

Module	Configuration	Pin Connections
ACMP1	Full configuration	ACMP1_CH[3:0], ACMP1_O
VCMP	Full configuration	NA
ADC0	Full configuration	ADC0_CH[7:0]
DAC0	Full configuration	DAC0_OUT[1:0], DAC0_OUTxALT
OPAMP	Full configuration	Outputs: OPAMP_OUTx, OPAMP_OUTxALT, Inputs: OPAMP_Px, OPAMP_Nx
AES	Full configuration	NA
GPIO	81 pins	Available pins are shown in 5.20.3 GPIO Pinout Overview
LCD	Full configuration	LCD_SEG[33:0], LCD_COM[7:0], LCD_BCAP_P, LCD_BCAP_N, LCD_BEXT

3.2.21 EFM32WG990

The following table describes device-specific implementation of the EFM32WG990 features.

Table 3.21. EFM32WG990 Configuration Summary

Module	Configuration	Pin Connections
Cortex-M4	Full configuration	NA
DBG	Full configuration	DBG_SWCLK, DBG_SWDIO, DBG_SWO
MSC	Full configuration	NA
DMA	Full configuration	NA
RMU	Full configuration	NA
EMU	Full configuration	NA
CMU	Full configuration	CMU_OUT0, CMU_OUT1
WDOG	Full configuration	NA
PRS	Full configuration	NA
USB	Full configuration	USB_VBUS, USB_VBUSEN, USB_VREGI, USB_VREGO, USB_DM, USB_DMPU, USB_DP, USB_ID
EBI	Full configuration	EBI_A[27:0], EBI_AD[15:0], EBI_ARDY, EBI_ALE, EBI_BL[1:0], EBI_CS[3:0], EBI_CSTFT, EBI_DCLK, EBI_DTEN, EBI_HSNC, EBI_NANDREn, EBI_NANDWEn, EBI_REn, EBI_VSNC, EBI_WEn
I2C0	Full configuration	I2C0_SDA, I2C0_SCL
I2C1	Full configuration	I2C1_SDA, I2C1_SCL
USART0	Full configuration with IrDA	US0_TX, US0_RX. US0_CLK, US0_CS
USART1	Full configuration with I2S	US1_TX, US1_RX, US1_CLK, US1_CS
USART2	Full configuration with I2S	US2_TX, US2_RX, US2_CLK, US2_CS
UART0	Full configuration	U0_TX, U0_RX
UART1	Full configuration	U1_TX, U1_RX
LEUART0	Full configuration	LEU0_TX, LEU0_RX
LEUART1	Full configuration	LEU1_TX, LEU1_RX
TIMER0	Full configuration with DTI	TIM0_CC[2:0], TIM0_CDTI[2:0]
TIMER1	Full configuration	TIM1_CC[2:0]
TIMER2	Full configuration	TIM2_CC[2:0]
TIMER3	Full configuration	TIM3_CC[2:0]
RTC	Full configuration	NA
BURTC	Full configuration	NA
LETIMER0	Full configuration	LET0_O[1:0]
PCNT0	Full configuration, 16-bit count register	PCNT0_S[1:0]
PCNT1	Full configuration, 8-bit count register	PCNT1_S[1:0]
PCNT2	Full configuration, 8-bit count register	PCNT2_S[1:0]
ACMP0	Full configuration	ACMP0_CH[7:0], ACMP0_O

Module	Configuration	Pin Connections
ACMP1	Full configuration	ACMP1_CH[3:0], ACMP1_O
VCMP	Full configuration	NA
ADC0	Full configuration	ADC0_CH[7:0]
DAC0	Full configuration	DAC0_OUT[1:0], DAC0_OUTxALT
OPAMP	Full configuration	Outputs: OPAMP_OUTx, OPAMP_OUTxALT, Inputs: OPAMP_Px, OPAMP_Nx
AES	Full configuration	NA
GPIO	86 pins	Available pins are shown in 5.21.3 GPIO Pinout Overview
LCD	Full configuration	LCD_SEG[33:0], LCD_COM[7:0], LCD_BCAP_P, LCD_BCAP_N, LCD_BEXT

3.2.22 EFM32WG995

The following table describes device-specific implementation of the EFM32WG995 features.

Table 3.22. EFM32WG995 Configuration Summary

Module	Configuration	Pin Connections
Cortex-M4	Full configuration	NA
DBG	Full configuration	DBG_SWCLK, DBG_SWDIO, DBG_SWO
MSC	Full configuration	NA
DMA	Full configuration	NA
RMU	Full configuration	NA
EMU	Full configuration	NA
CMU	Full configuration	CMU_OUT0, CMU_OUT1
WDOG	Full configuration	NA
PRS	Full configuration	NA
USB	Full configuration	USB_VBUS, USB_VBUSEN, USB_VREGI, USB_VREGO, USB_DM, USB_DMPU, USB_DP, USB_ID
EBI	Full configuration	EBI_A[27:0], EBI_AD[15:0], EBI_ARDY, EBI_ALE, EBI_BL[1:0], EBI_CS[3:0], EBI_CSTFT, EBI_DCLK, EBI_DTEN, EBI_HSNC, EBI_NANDREn, EBI_NANDWEn, EBI_REn, EBI_VSNC, EBI_WEn
I2C0	Full configuration	I2C0_SDA, I2C0_SCL
I2C1	Full configuration	I2C1_SDA, I2C1_SCL
USART0	Full configuration with IrDA	US0_TX, US0_RX. US0_CLK, US0_CS
USART1	Full configuration with I2S	US1_TX, US1_RX, US1_CLK, US1_CS
USART2	Full configuration with I2S	US2_TX, US2_RX, US2_CLK, US2_CS
UART0	Full configuration	U0_TX, U0_RX
UART1	Full configuration	U1_TX, U1_RX
LEUART0	Full configuration	LEU0_TX, LEU0_RX
LEUART1	Full configuration	LEU1_TX, LEU1_RX
TIMER0	Full configuration with DTI	TIM0_CC[2:0], TIM0_CDTI[2:0]
TIMER1	Full configuration	TIM1_CC[2:0]
TIMER2	Full configuration	TIM2_CC[2:0]
TIMER3	Full configuration	TIM3_CC[2:0]
RTC	Full configuration	NA
BURTC	Full configuration	NA
LETIMER0	Full configuration	LET0_O[1:0]
PCNT0	Full configuration, 16-bit count register	PCNT0_S[1:0]
PCNT1	Full configuration, 8-bit count register	PCNT1_S[1:0]
PCNT2	Full configuration, 8-bit count register	PCNT2_S[1:0]
ACMP0	Full configuration	ACMP0_CH[7:0], ACMP0_O

Module	Configuration	Pin Connections
ACMP1	Full configuration	ACMP1_CH[7:0], ACMP1_O
VCMP	Full configuration	NA
ADC0	Full configuration	ADC0_CH[7:0]
DAC0	Full configuration	DAC0_OUT[1:0], DAC0_OUTxALT
OPAMP	Full configuration	Outputs: OPAMP_OUTx, OPAMP_OUTxALT, Inputs: OPAMP_Px, OPAMP_Nx
AES	Full configuration	NA
GPIO	93 pins	Available pins are shown in 5.22.3 GPIO Pinout Overview
LCD	Full configuration	LCD_SEG[35:0], LCD_COM[7:0], LCD_BCAP_P, LCD_BCAP_N, LCD_BEXT

3.3 Memory Map

The EFM32WG memory map is shown in the following figure, with RAM and flash sizes for the largest memory configuration.

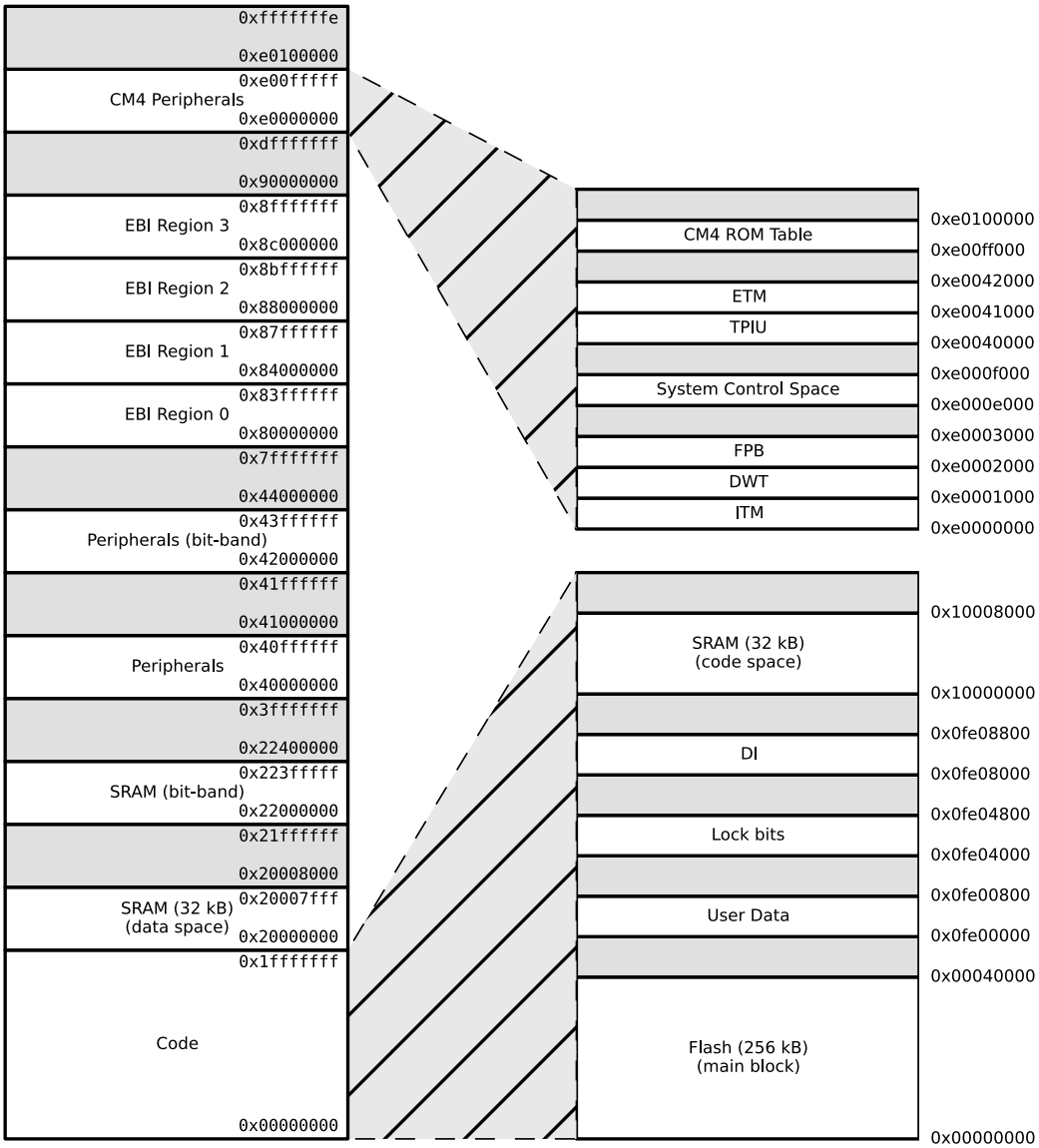

Figure 3.2. System Address Space with Core and Code Space Listing

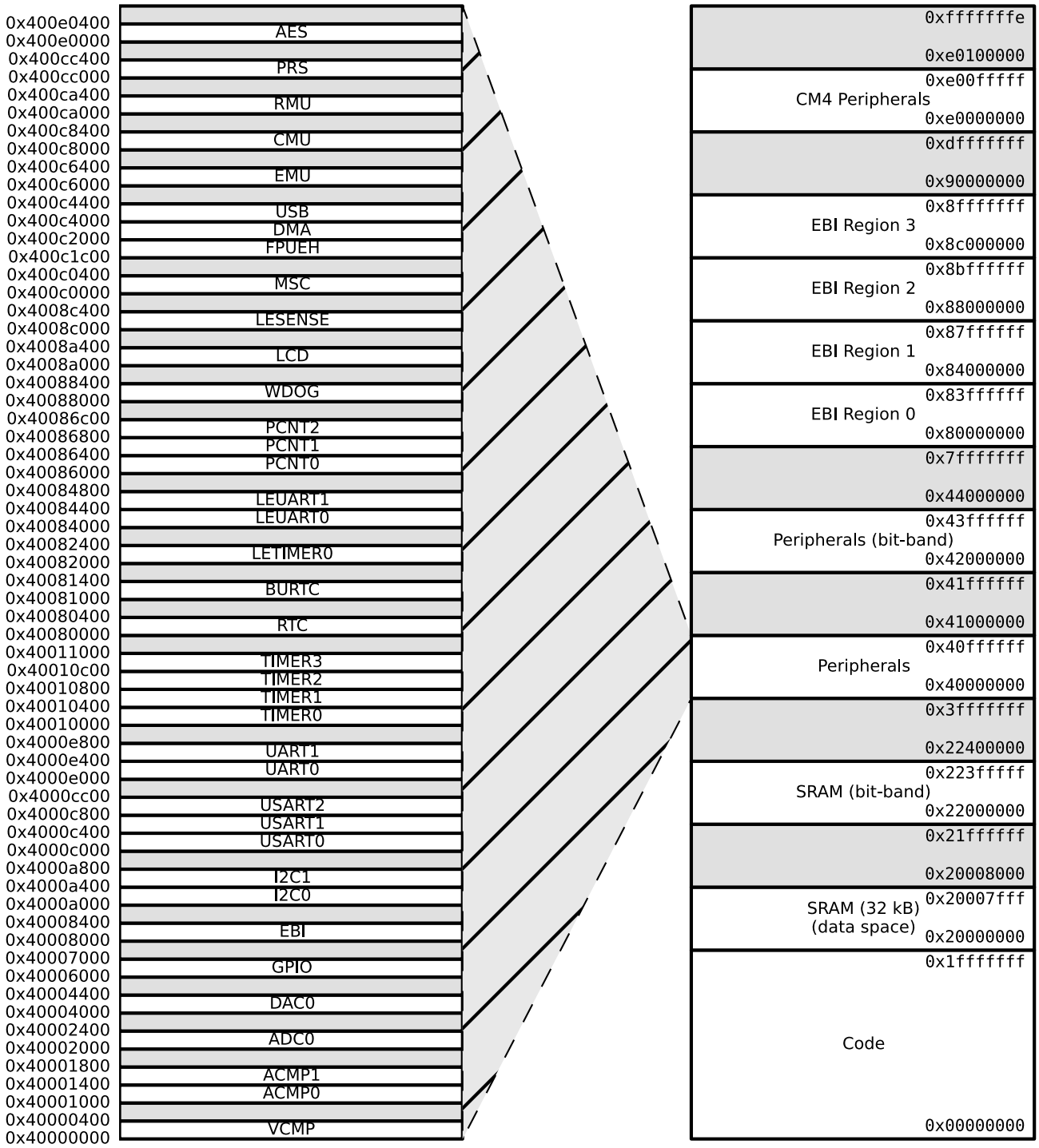

Figure 3.3. System Address Space with Peripheral Listing

4. Electrical Characteristics

4.1 Test Conditions

4.1.1 Typical Values

The typical data are based on T_{AMB}=25°C and V_{DD}=3.0 V, as defined in 4.3 General Operating Conditions, unless otherwise specified.

4.1.2 Minimum and Maximum Values

The minimum and maximum values represent the worst conditions of ambient temperature, supply voltage and frequencies, as defined in 4.3 General Operating Conditions, unless otherwise specified.

4.2 Absolute Maximum Ratings

Stresses above those listed below may cause permanent damage to the device. This is a stress rating only and functional operation of the devices at those or any other conditions above those indicated in the operation listings of this specification is not implied. Exposure to maximum rating conditions for extended periods may affect device reliability. For more information on the available quality and reliability data, see the Quality and Reliability Monitor Report at http://www.silabs.com/support/quality/pages/default.aspx.

Table 4.1. Absolute Maximum Ratings

Parameter	Symbol	Test Condition	Min	Typ	Max	Unit
Storage temperature range	T_{STG}		-40	—	150	°C
Maximum soldering temperature	T_S	Latest IPC/JEDEC J-STD-020 Standard	—	—	260	°C
External main supply voltage	V_{DDMAX}		0	—	3.8	V
Voltage on any I/O pin	V_{IOPIN}		-0.3	—	V_{DD}+0.3	V
Current per I/O pin (sink)	I_{IOMAX_SINK}		—	—	100	mA
Current per I/O pin (source)	I_{IOMAX_SOURCE}		—	—	-100	mA

4.3 General Operating Conditions

Table 4.2. General Operating Conditions

Parameter	Symbol	Min	Typ	Max	Unit
Ambient temperature range	T_{AMB}	-40	—	85	°C
Operating supply voltage	V_{DDOP}	1.98	—	3.8	V
Internal APB clock frequency	f_{APB}	—	—	48	MHz
Internal AHB clock frequency	f_{AHB}	—	—	48	MHz

4.4 Backup Supply Domain

Table 4.3. Backup Supply Domain

Parameter	Symbol	Test Condition	Min	Typ	Max	Unit
Backup supply voltage range	V_{BU_VIN}		1.8	—	3.8	V
PWRRES resistor	R_{PWRRES}	EMU_PWRCONF_PWRRES = RES0	4234	4485	4786	Ω
		EMU_PWRCONF_PWRRES = RES1	2208	2363	2528	Ω
		EMU_PWRCONF_PWRRES = RES2	1166	1297	1433	Ω
		EMU_PWRCONF_PWRRES = RES3	295	344	399	Ω
Output impedance between BU_VIN and BU_VOUT [1]	R_{BU_VOUT}	EMU_PWRCONF_VOUT-STRONG = 1, EMU_PWRCONF_VOUTMED = 0, EMU_PWRCONF_VOUT-WEAK = 0	49	63	80	Ω
		EMU_PWRCONF_VOUT-STRONG = 0, EMU_PWRCONF_VOUTMED = 1, EMU_PWRCONF_VOUT-WEAK = 0	522	670	844	Ω
		EMU_PWRCONF_VOUT-STRONG = 0, EMU_PWRCONF_VOUTMED = 0, EMU_PWRCONF_VOUT-WEAK = 1	5161	6743	7853	Ω
Supply current	I_{BU_VIN}	BU_VIN not powering backup domain	—	3.4	6.5	nA
		BU_VIN powering backup domain	—	197	1050	nA

Note:

1. BU_VOUT and BU_STAT signals are not available in all package configurations. Check the device pinout for availability.

4.5 Current Consumption

Table 4.4. Current Consumption

Parameter	Symbol	Test Condition	Min	Typ	Max	Unit
EM0 current. No prescaling. Running prime number calculation code from flash. (Production test condition = 14 MHz)	I_{EM0}	48 MHz HFXO, all peripheral clocks disabled, V_{DD} = 3.0 V, T_{AMB} = 25 °C	—	211	225	µA/MHz
		48 MHz HFXO, all peripheral clocks disabled, V_{DD} = 3.0 V, T_{AMB} = 85 °C	—	211	230	µA/MHz
		28 MHz HFRCO, all peripheral clocks disabled, V_{DD} = 3.0 V, T_{AMB} = 25°C	—	212	220	µA/MHz
		28 MHz HFRCO, all peripheral clocks disabled, V_{DD} = 3.0 V, T_{AMB} = 85 °C	—	213	223	µA/MHz
		21 MHz HFRCO, all peripheral clocks disabled, V_{DD} = 3.0 V, T_{AMB} = 25 °C	—	214	224	µA/MHz
		21 MHz HFRCO, all peripheral clocks disabled, V_{DD} = 3.0 V, T_{AMB} = 85 °C	—	215	226	µA/MHz
		14 MHz HFRCO, all peripheral clocks disabled, V_{DD} = 3.0 V, T_{AMB} = 25 °C	—	216	231	µA/MHz
		14 MHz HFRCO, all peripheral clocks disabled, V_{DD} = 3.0 V, T_{AMB} = 85 °C	—	217	237	µA/MHz
		11 MHz HFRCO, all peripheral clocks disabled, V_{DD} = 3.0 V, T_{AMB} = 25 °C	—	218	239	µA/MHz
		11 MHz HFRCO, all peripheral clocks disabled, V_{DD} = 3.0 V, T_{AMB} = 85 °C	—	219	239	µA/MHz
		6.6 MHz HFRCO, all peripheral clocks disabled, V_{DD} = 3.0 V, T_{AMB} = 25 °C	—	224	245	µA/MHz
		6.6 MHz HFRCO, all peripheral clocks disabled, V_{DD} = 3.0 V, T_{AMB} = 85 °C	—	224	258	µA/MHz
		1.2 MHz HFRCO, all peripheral clocks disabled, V_{DD} = 3.0 V, T_{AMB} = 25 °C	—	257	285	µA/MHz
		1.2 MHz HFRCO, all peripheral clocks disabled, V_{DD} = 3.0 V, T_{AMB} = 85 °C	—	261	293	µA/MHz

Parameter	Symbol	Test Condition	Min	Typ	Max	Unit
EM1 current (Production test condition = 14 MHz)	I_{EM1}	48 MHz HFXO, all peripheral clocks disabled, V_{DD} = 3.0 V, T_{AMB} = 25 °C	—	63	75	µA/MHz
		48 MHz HFXO, all peripheral clocks disabled, V_{DD} = 3.0 V, T_{AMB} = 85 °C	—	65	76	µA/MHz
		28 MHz HFRCO, all peripheral clocks disabled, V_{DD} = 3.0 V, T_{AMB} = 25 °C	—	64	75	µA/MHz
		28 MHz HFRCO, all peripheral clocks disabled, V_{DD} = 3.0 V, T_{AMB} = 85 °C	—	65	77	µA/MHz
		21 MHz HFRCO, all peripheral clocks disabled, V_{DD} = 3.0 V, T_{AMB} = 25°C	—	65	76	µA/MHz
		21 MHz HFRCO, all peripheral clocks disabled, V_{DD} = 3.0 V, T_{AMB} = 85 °C	—	66	78	µA/MHz
		14 MHz HFRCO, all peripheral clocks disabled, V_{DD} = 3.0 V, T_{AMB} = 25 °C	—	67	79	µA/MHz
		14 MHz HFRCO, all peripheral clocks disabled, V_{DD} = 3.0 V, T_{AMB} = 85 °C	—	68	82	µA/MHz
		11 MHz HFRCO, all peripheral clocks disabled, V_{DD} = 3.0 V, T_{AMB} = 25 °C	—	68	81	µA/MHz
		11 MHz HFRCO, all peripheral clocks disabled, V_{DD} = 3.0 V, T_{AMB} = 85 °C	—	70	83	µA/MHz
		6.6 MHz HFRCO, all peripheral clocks disabled, V_{DD} = 3.0 V, T_{AMB} = 25 °C	—	74	87	µA/MHz
		6.6 MHz HFRCO, all peripheral clocks disabled, V_{DD} = 3.0 V, T_{AMB} = 85 °C	—	76	89	µA/MHz
		1.2 MHz HFRCO. all peripheral clocks disabled, V_{DD} = 3.0 V, T_{AMB} = 25 °C	—	106	120	µA/MHz
		1.2 MHz HFRCO. all peripheral clocks disabled, V_{DD} = 3.0 V, T_{AMB} = 85 °C	—	112	129	µA/MHz
EM2 current	I_{EM2}	EM2 current with RTC prescaled to 1 Hz, 32.768 kHz LFRCO, V_{DD} = 3.0 V, T_{AMB} = 25 °C	—	0.95[1]	1.7[1]	µA
		EM2 current with RTC prescaled to 1 Hz, 32.768 kHz LFRCO, V_{DD} = 3.0 V, T_{AMB} = 85 °C	—	3.0[1]	4.0[1]	µA
EM3 current	I_{EM3}	V_{DD} = 3.0 V, T_{AMB} = 25 °C	—	0.65	1.3	µA
		V_{DD} = 3.0 V, T_{AMB} = 85 °C	—	2.65	4.0	µA
EM4 current	I_{EM4}	V_{DD} = 3.0 V, T_{AMB} = 25 °C	—	0.020	0.055	µA
		V_{DD} = 3.0 V, T_{AMB} = 85 °C	—	0.44	0.90	µA

Note:

1. Using backup RTC.

4.5.1 EM1 Current Consumption

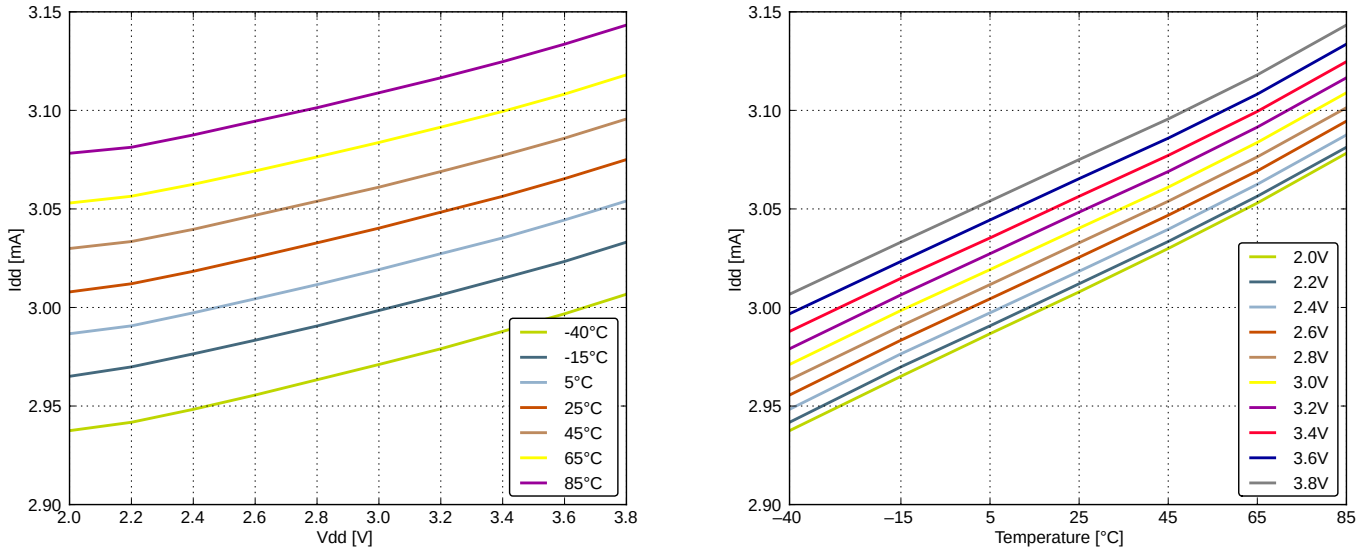

Figure 4.1. EM1 Current Consumption with all Peripheral Clocks Disabled and HFXO Running at 48 MHz

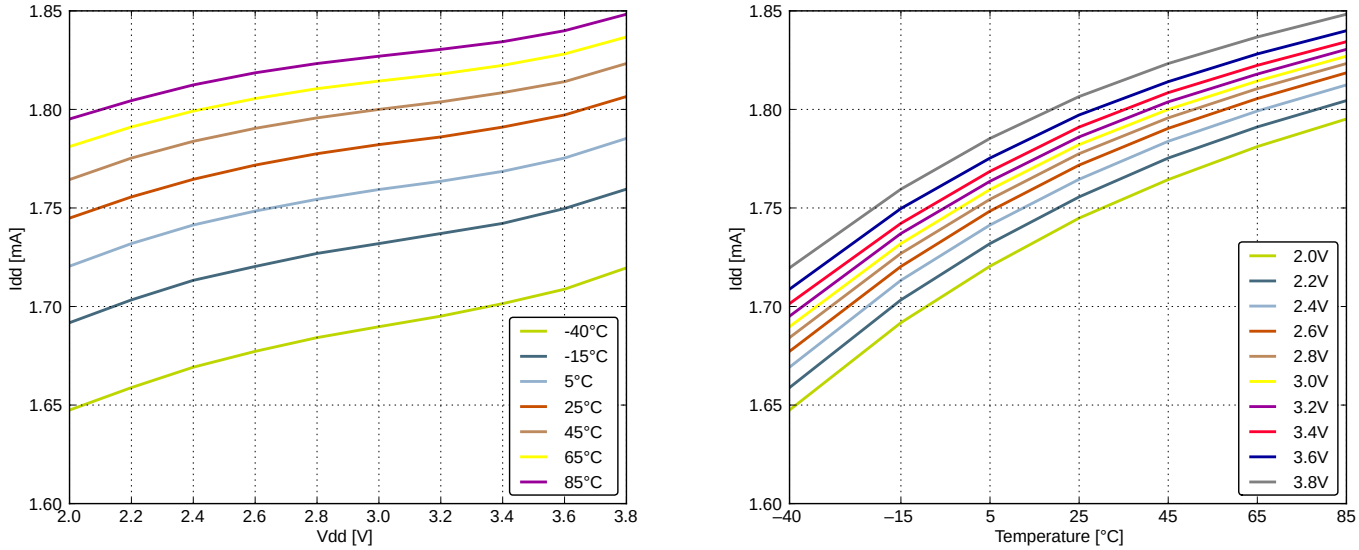

Figure 4.2. EM1 Current Consumption with all Peripheral Clocks Disabled and HFRCO Running at 28 MHz

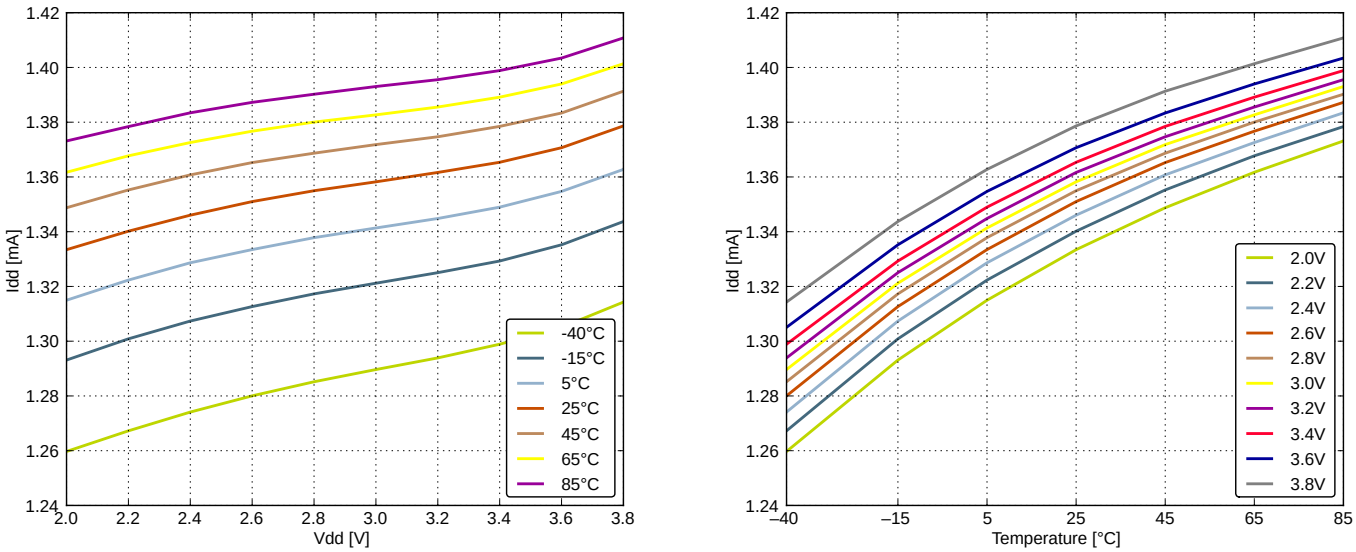

Figure 4.3. EM1 Current Consumption with all Peripheral Clocks Disabled and HFRCO Running at 21 MHz

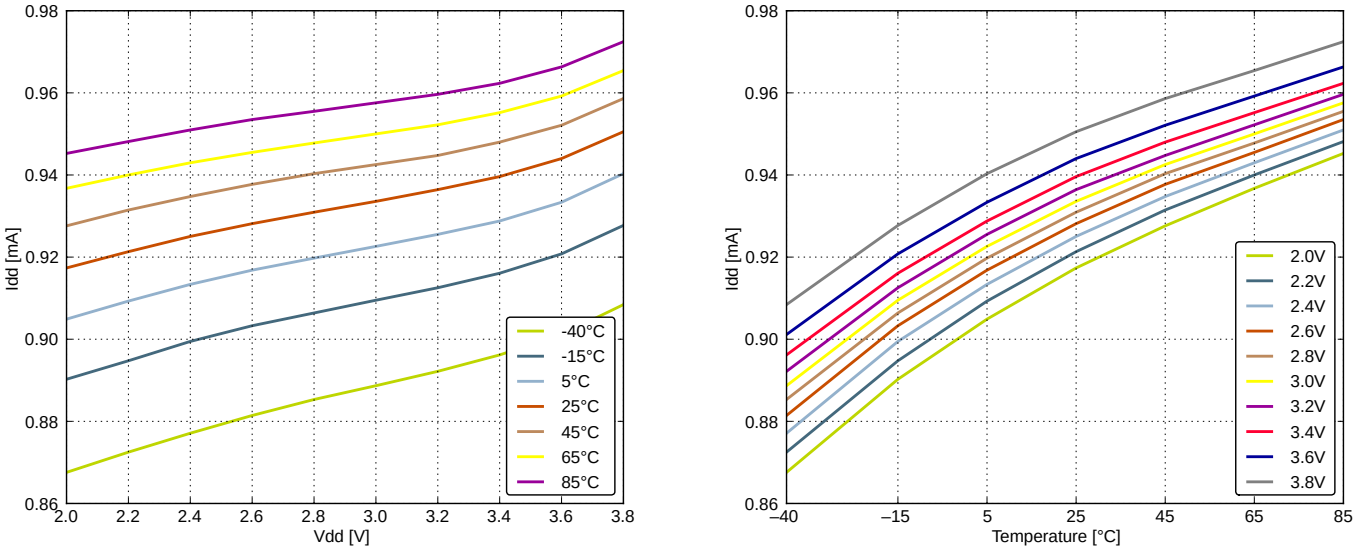

Figure 4.4. EM1 Current Consumption with all Peripheral Clocks Disabled and HFRCO Running at 14 MHz

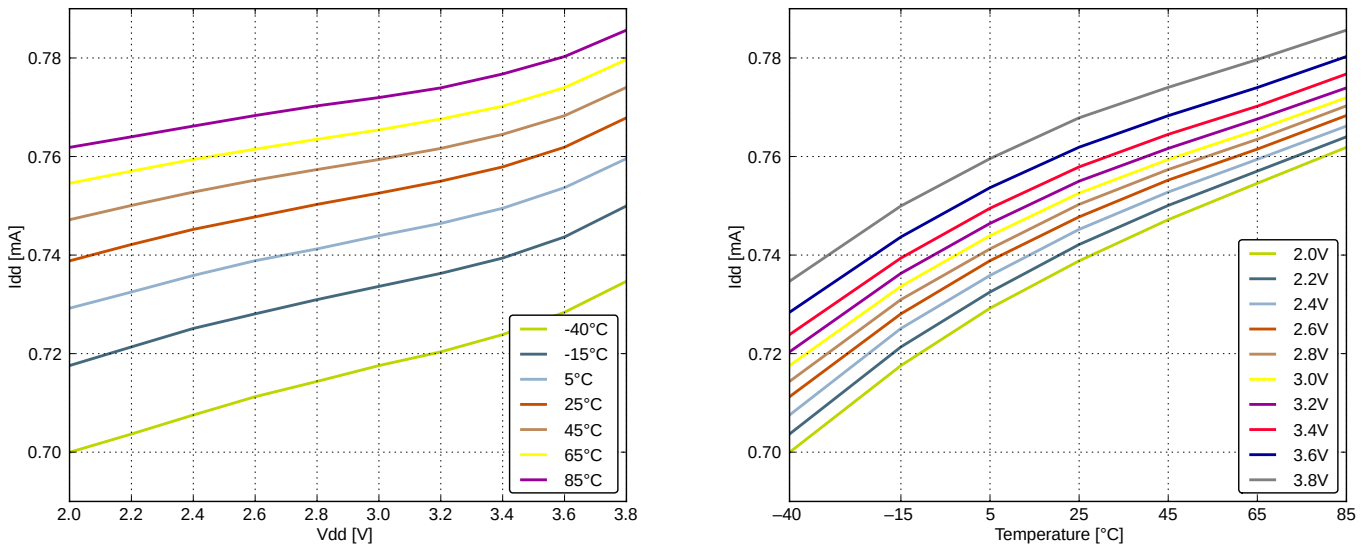

Figure 4.5. EM1 Current Consumption with all Peripheral Clocks Disabled and HFRCO Running at 11 MHz

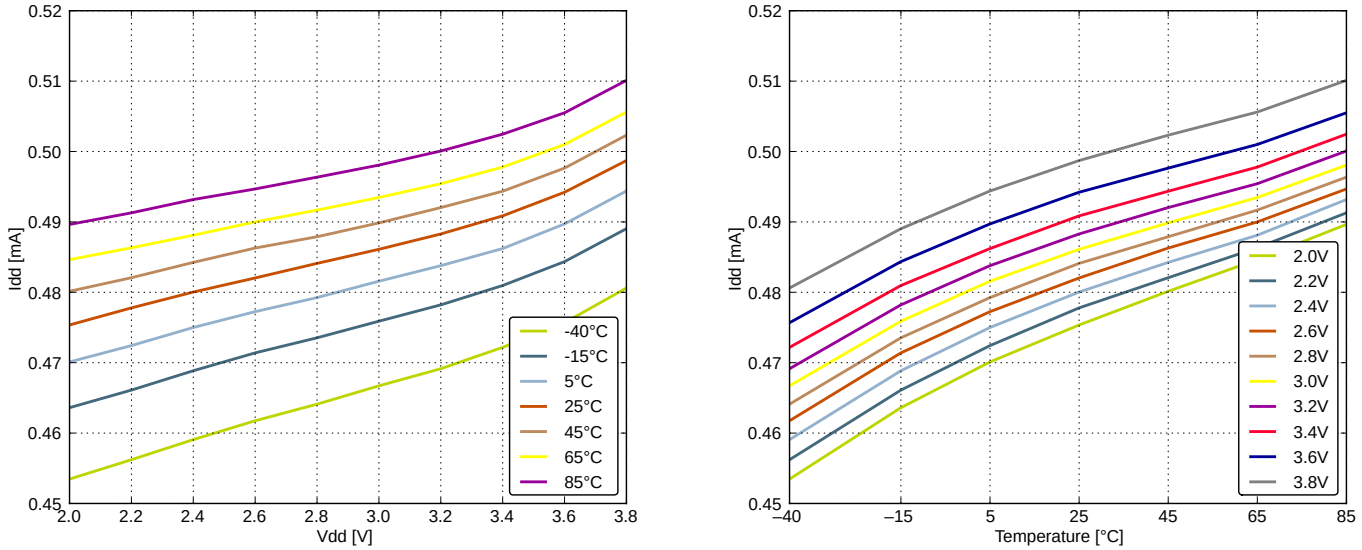

Figure 4.6. EM1 Current Consumption with all Peripheral Clocks Disabled and HFRCO Running at 6.6 MHz

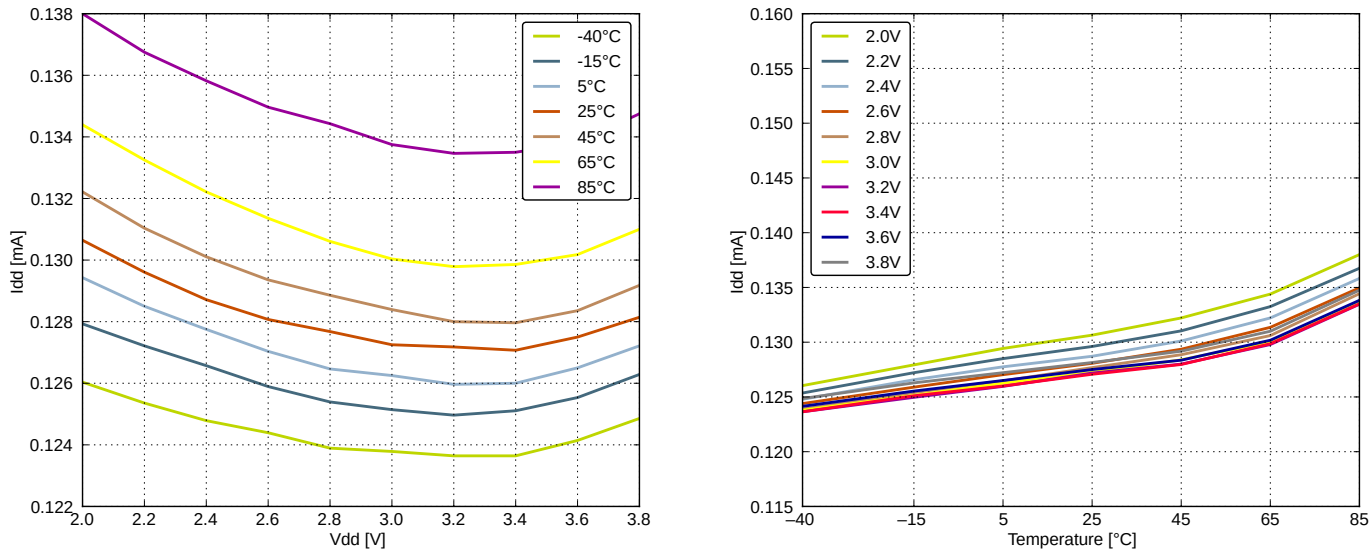

4.5.2 EM2 Current Consumption

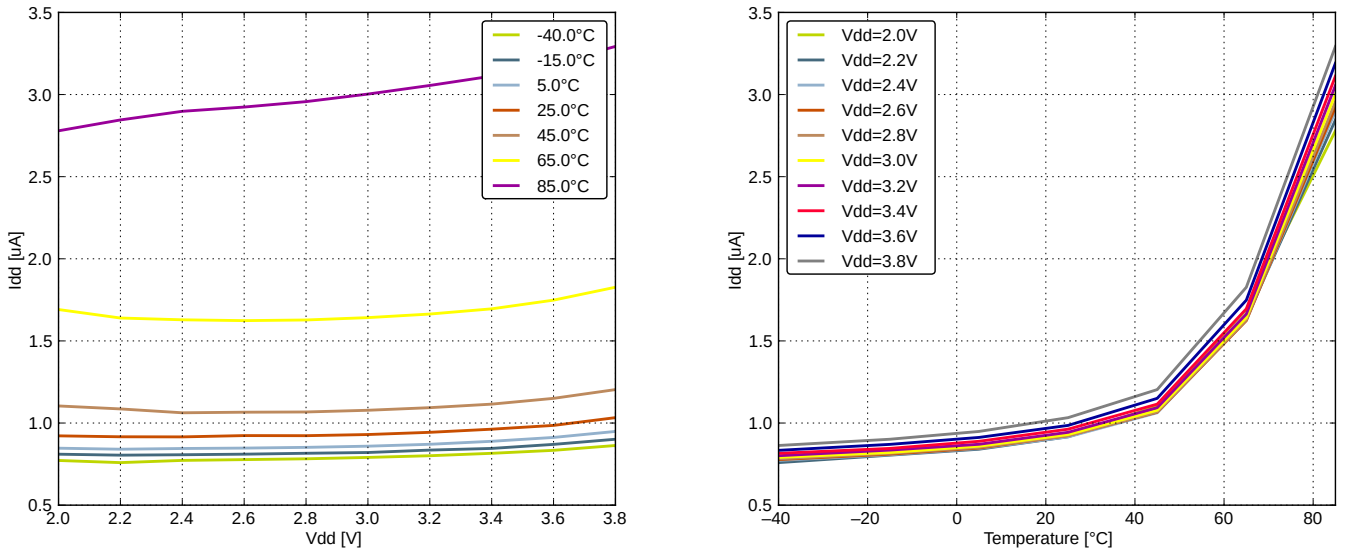

Figure 4.7. EM2 Current Consumption, RTC prescaled to 1 kHz, 32.768 kHz LFRCO

4.5.3 EM3 Current Consumption

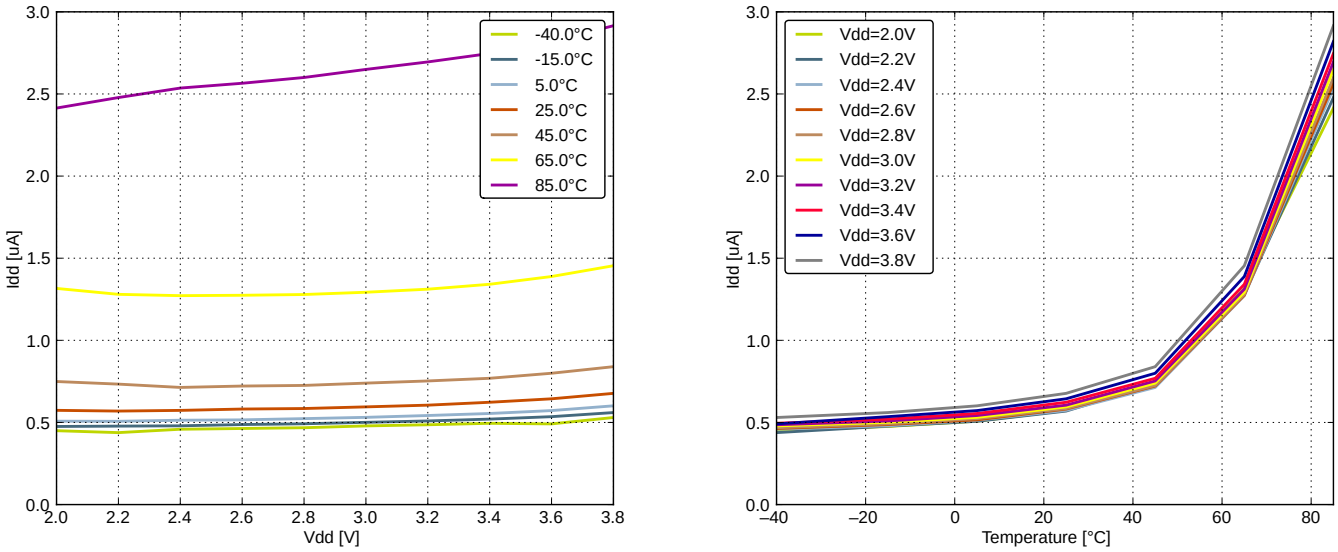

Figure 4.8. EM3 Current Consumption

4.5.4 EM4 Current Consumption

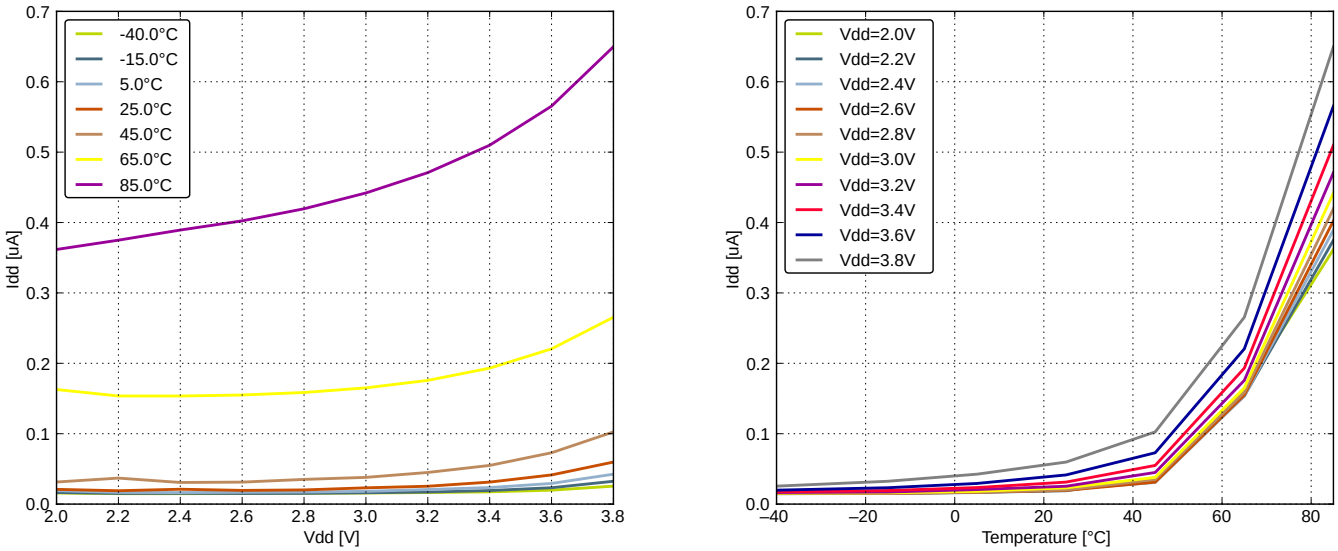

Figure 4.9. EM4 Current Consumption

4.6 Transition between Energy Modes

The transition times are measured from the trigger to the first clock edge in the CPU.

Table 4.5. Energy Modes Transitions

Parameter	Symbol	Min	Typ	Max	Unit
Transition time from EM1 to EM0	t_{EM10}	—	0	—	HFCORECLK cycles
Transition time from EM2 to EM0	t_{EM20}	—	2	—	µs
Transition time from EM3 to EM0	t_{EM30}	—	2	—	µs
Transition time from EM4 to EM0	t_{EM40}	—	163	—	µs

4.7 Power Management

The EFM32WG requires the AVDD_x, VDD_DREG and IOVDD_x pins to be connected together (with optional filter) at the PCB level. For practical schematic recommendations, see the application note, AN0002.0: EFM32 and EZR32 Wireless MCU Series 0 Hardware Design Considerations.

Table 4.6. Power Management

Parameter	Symbol	Test Condition	Min	Typ	Max	Unit
BOD threshold on falling external supply voltage	$V_{BODextthr-}$		1.74	—	1.96	V
BOD threshold on rising external supply voltage	$V_{BODextthr+}$		—	1.85	1.98	V
Power-on Reset (POR) threshold on rising external supply voltage	$V_{PORthr+}$		—	—	1.98	V
Delay from reset is released until program execution starts	t_{RESET}	Applies to Power-on Reset, Brown-out Reset and pin reset.	—	163	—	µs
Voltage regulator decoupling capacitor.	$C_{DECOUPLE}$	X5R capacitor recommended. Apply between DECOUPLE pin and GROUND	—	1	—	µF
USB voltage regulator out decoupling capacitor.	C_{USB_VREGO}	X5R capacitor recommended. Apply between USB_VREGO pin and GROUND	—	1	—	µF
USB voltage regulator in decoupling capacitor.	C_{USB_VREGI}	X5R capacitor recommended. Apply between USB_VREGI pin and GROUND	—	4.7	—	µF

4.8 Flash

Table 4.7. Flash

Parameter	Symbol	Test Condition	Min	Typ	Max	Unit
Flash erase cycles before failure	EC_{FLASH}		20000	—	—	cycles
Flash word write cycles between erase	WWC_{FLASH}		—	—	2[1]	cycles
Flash data retention	RET_{FLASH}	T_{AMB}<150 °C	10000	—	—	h
		T_{AMB}<85 °C	10	—	—	years
		T_{AMB}<70 °C	20	—	—	years
Word (32-bit) programming time	t_{W_PROG}		20	—	—	µs
Page erase time[2]	t_{PERASE}		20.7	22.0	24.8	ms
Device erase time[3]	t_{DERASE}		41.8	45.0	49.2	ms
Erase current	I_{ERASE}		—	—	7[4]	mA
Write current	I_{WRITE}		—	—	7[4]	mA
Supply voltage during flash erase and write	V_{FLASH}		1.98	—	3.8	V

Note:

1. There is a maximum of two writes to the same word between each erase due to a physical limitation of the flash. No bit should be written to ‘0’ more than once between erases. To write a word twice between erases, any bit written to ‘0’ by the first write should be written to ‘1’ by the second write. This preserves the specified flash write/erase endurance and does not change the ‘0’ written by the first write.
2. From setting ERASEPAGE bit in MSC_WRITECMD to 1 to reading 1 in ERASE bit in MSC_IF. Internal setup and hold times for flash control signals are included.
3. From setting DEVICEERASE bit in AAP_CMD to 1 to reading 0 in ERASEBUSY bit in AAP_STATUS. Internal setup and hold times for flash control signals are included.
4. Measured at 25 °C.

4.9 General Purpose Input Output

Table 4.8. GPIO

Parameter	Symbol	Test Condition	Min	Typ	Max	Unit
Input low voltage	V_{IOIL}		—	—	$0.30 \times V_{DD}$	V
Input high voltage	V_{IOIH}		$0.70 \times V_{DD}$	—	—	V
Output high voltage (Production test condition = 3.0 V, DRIVEMODE = STANDARD)	V_{IOOH}	Sourcing 0.1 mA, V_{DD} = 1.98 V, GPIO_Px_CTRL DRIVEMODE = LOWEST	—	$0.80 \times V_{DD}$	—	V
		Sourcing 0.1 mA, V_{DD} = 3.0 V, GPIO_Px_CTRL DRIVEMODE = LOWEST	—	$0.90 \times V_{DD}$	—	V
		Sourcing 1 mA, V_{DD} = 1.98 V, GPIO_Px_CTRL DRIVEMODE = LOW	—	$0.85 \times V_{DD}$	—	V
		Sourcing 1 mA, V_{DD} = 3.0 V, GPIO_Px_CTRL DRIVEMODE = LOW	—	$0.90 \times V_{DD}$	—	V
		Sourcing 6 mA, V_{DD} = 1.98 V, GPIO_Px_CTRL DRIVEMODE = STANDARD	$0.75 \times V_{DD}$	—	—	V
		Sourcing 6 mA, V_{DD} = 3.0 V, GPIO_Px_CTRL DRIVEMODE = STANDARD	$0.85 \times V_{DD}$	—	—	V
		Sourcing 20 mA, V_{DD} = 1.98 V, GPIO_Px_CTRL DRIVEMODE = HIGH	$0.60 \times V_{DD}$	—	—	V
		Sourcing 20 mA, V_{DD} = 3.0 V, GPIO_Px_CTRL DRIVEMODE = HIGH	$0.80 \times V_{DD}$	—	—	V
Output low voltage (Production test condition = 3.0 V, DRIVEMODE = STANDARD)	V_{IOOL}	Sinking 0.1 mA, V_{DD} = 1.98 V, GPIO_Px_CTRL DRIVEMODE = LOWEST	—	$0.20 \times V_{DD}$	—	V
		Sinking 0.1 mA, V_{DD} = 3.0 V, GPIO_Px_CTRL DRIVEMODE = LOWEST	—	$0.10 \times V_{DD}$	—	V
		Sinking 1 mA, V_{DD} = 1.98 V, GPIO_Px_CTRL DRIVEMODE = LOW	—	$0.10 \times V_{DD}$	—	V
		Sinking 1 mA, V_{DD} = 3.0 V, GPIO_Px_CTRL DRIVEMODE = LOW	—	$0.05 \times V_{DD}$	—	V
		Sinking 6 mA, V_{DD} = 1.98 V, GPIO_Px_CTRL DRIVEMODE = STANDARD	—	—	$0.30 \times V_{DD}$	V
		Sinking 6 mA, V_{DD} = 3.0 V, GPIO_Px_CTRL DRIVEMODE = STANDARD	—	—	$0.20 \times V_{DD}$	V
		Sinking 20 mA, V_{DD} = 1.98 V, GPIO_Px_CTRL DRIVEMODE = HIGH	—	—	$0.35 \times V_{DD}$	V
		Sinking 20 mA, V_{DD} = 3.0 V, GPIO_Px_CTRL DRIVEMODE = HIGH	—	—	$0.25 \times V_{DD}$	V

Parameter	Symbol	Test Condition	Min	Typ	Max	Unit
Input leakage current	I_{IOLEAK}	VSS < Vin < VDD; pin configured as input or disabled, pullup and pull-down are disabled	-40	±0.1	40	nA
I/O pin pull-up resistor	R_{PU}		—	40	—	kΩ
I/O pin pull-down resistor	R_{PD}		—	40	—	kΩ
Internal ESD series resistor	R_{IOESD}		—	200	—	Ω
Pulse width of pulses to be removed by the glitch suppression filter	$t_{IO-GLITCH}$		10	—	50	ns
Output fall time	t_{IOOF}	GPIO_Px_CTRL DRIVEMODE = LOWEST and load capacitance C_L = 12.5-25 pF.	20+0.1×C_L	—	250	ns
		GPIO_Px_CTRL DRIVEMODE = LOW and load capacitance C_L = 350-600 pF	20+0.1×C_L	—	250	ns
I/O pin hysteresis (V_{IOTHR+} - V_{IOTHR-})	V_{IOHYST}	V_{DD} = 1.98 - 3.8 V	0.10×V_{DD}	—	—	V

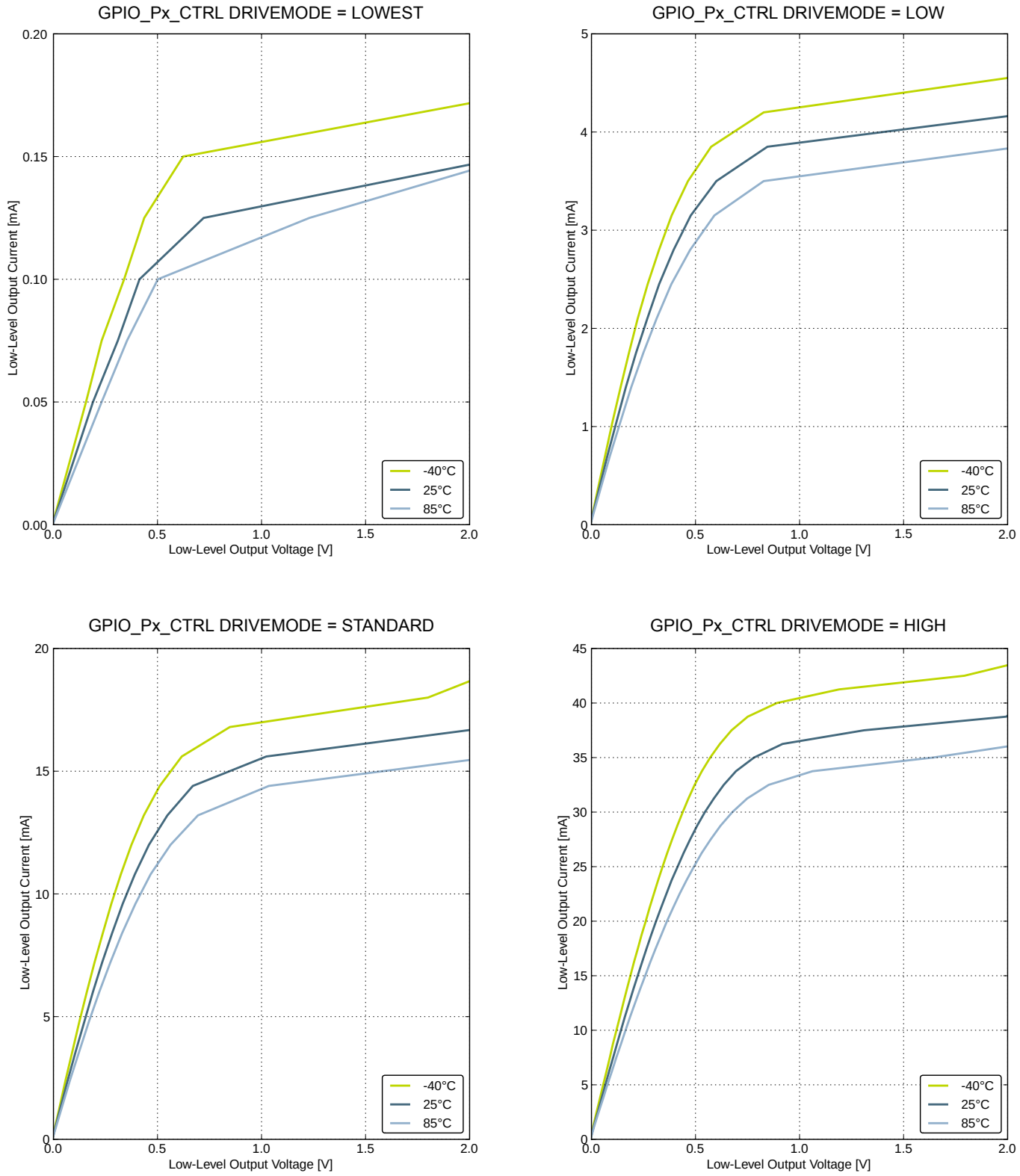

Figure 4.10. Typical Low-Level Output Current, 2 V Supply Voltage

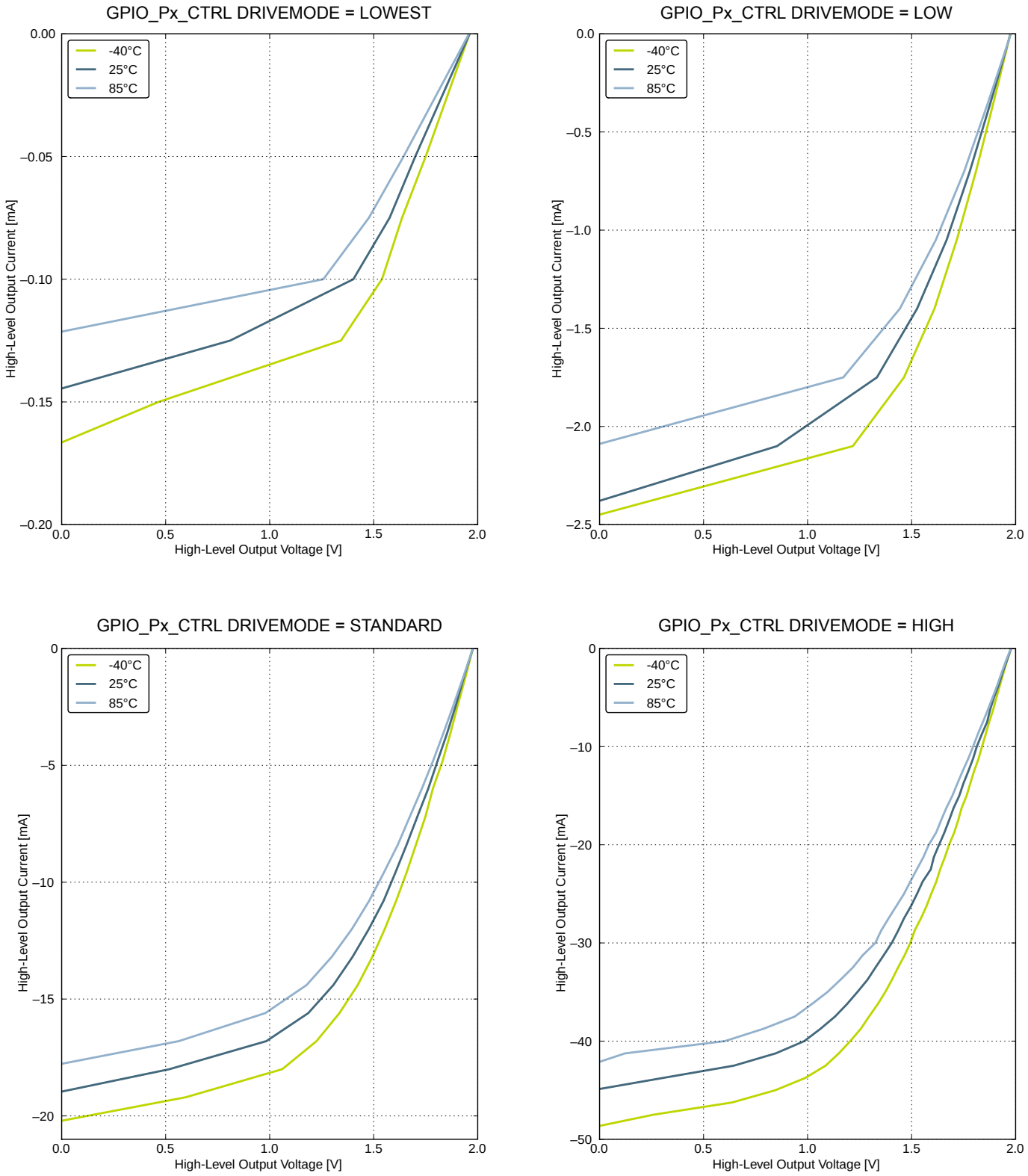

Figure 4.11. Typical High-Level Output Current, 2 V Supply Voltage

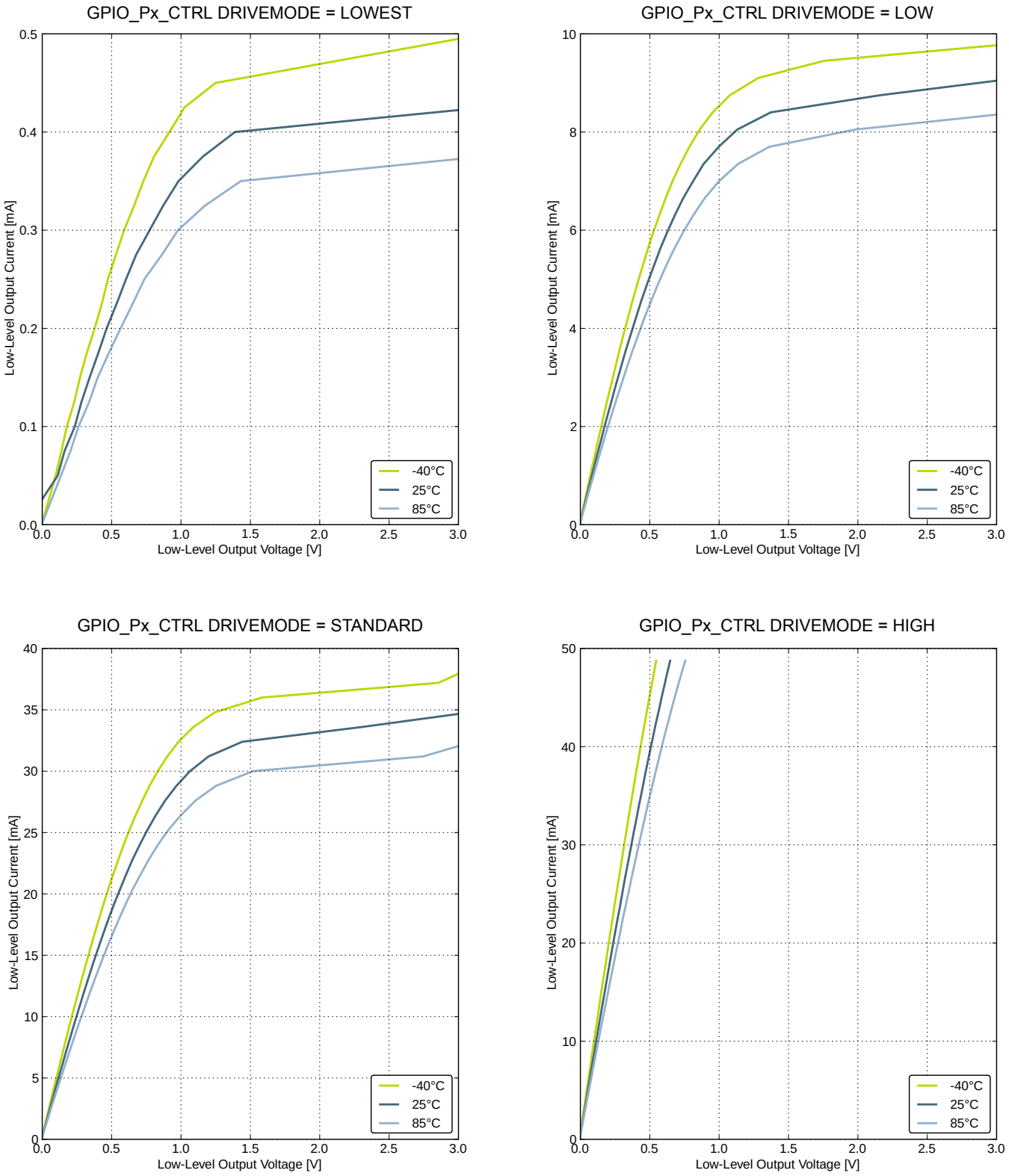

Figure 4.12. Typical Low-Level Output Current, 3 V Supply Voltage

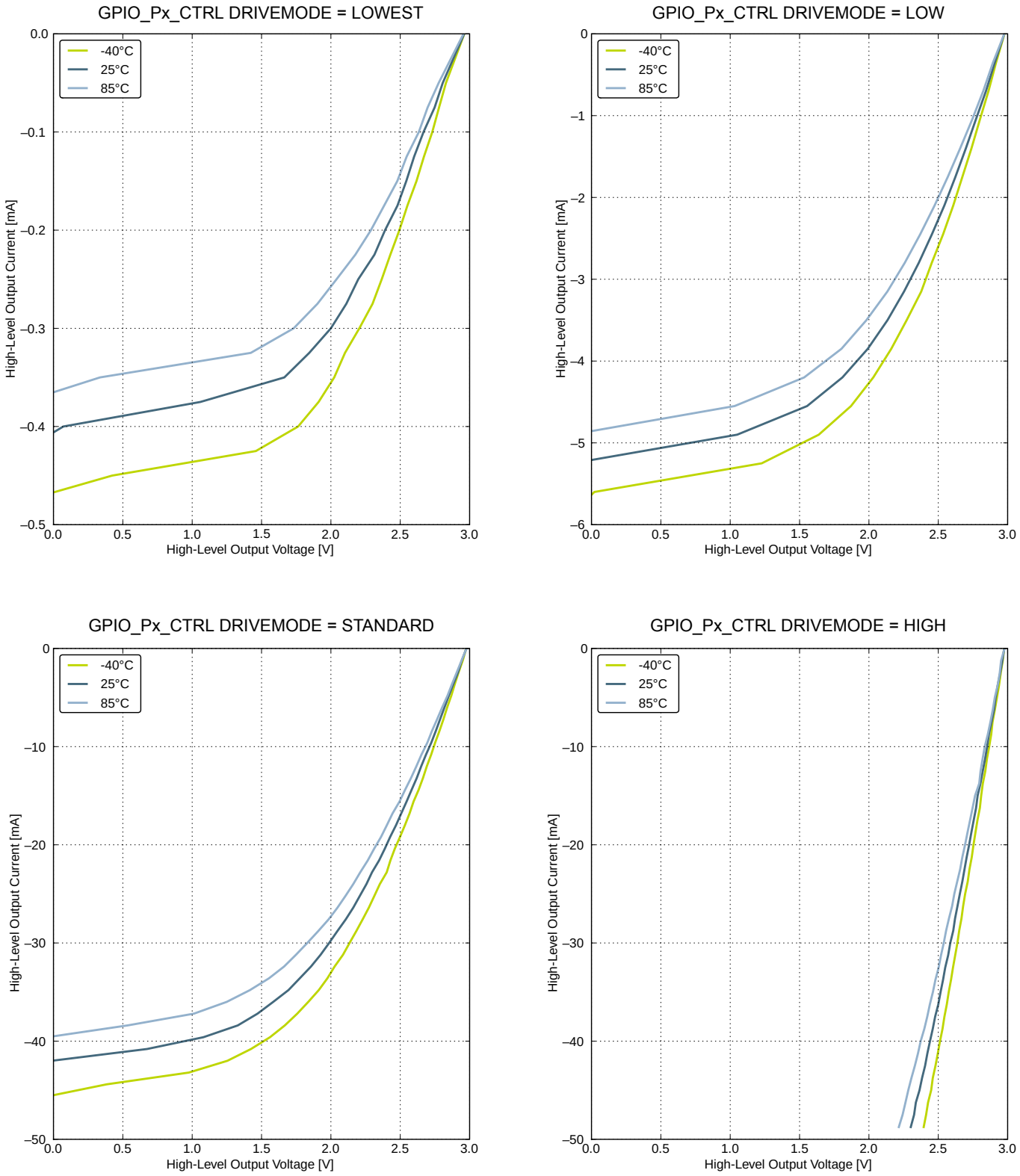

Figure 4.13. Typical High-Level Output Current, 3 V Supply Voltage

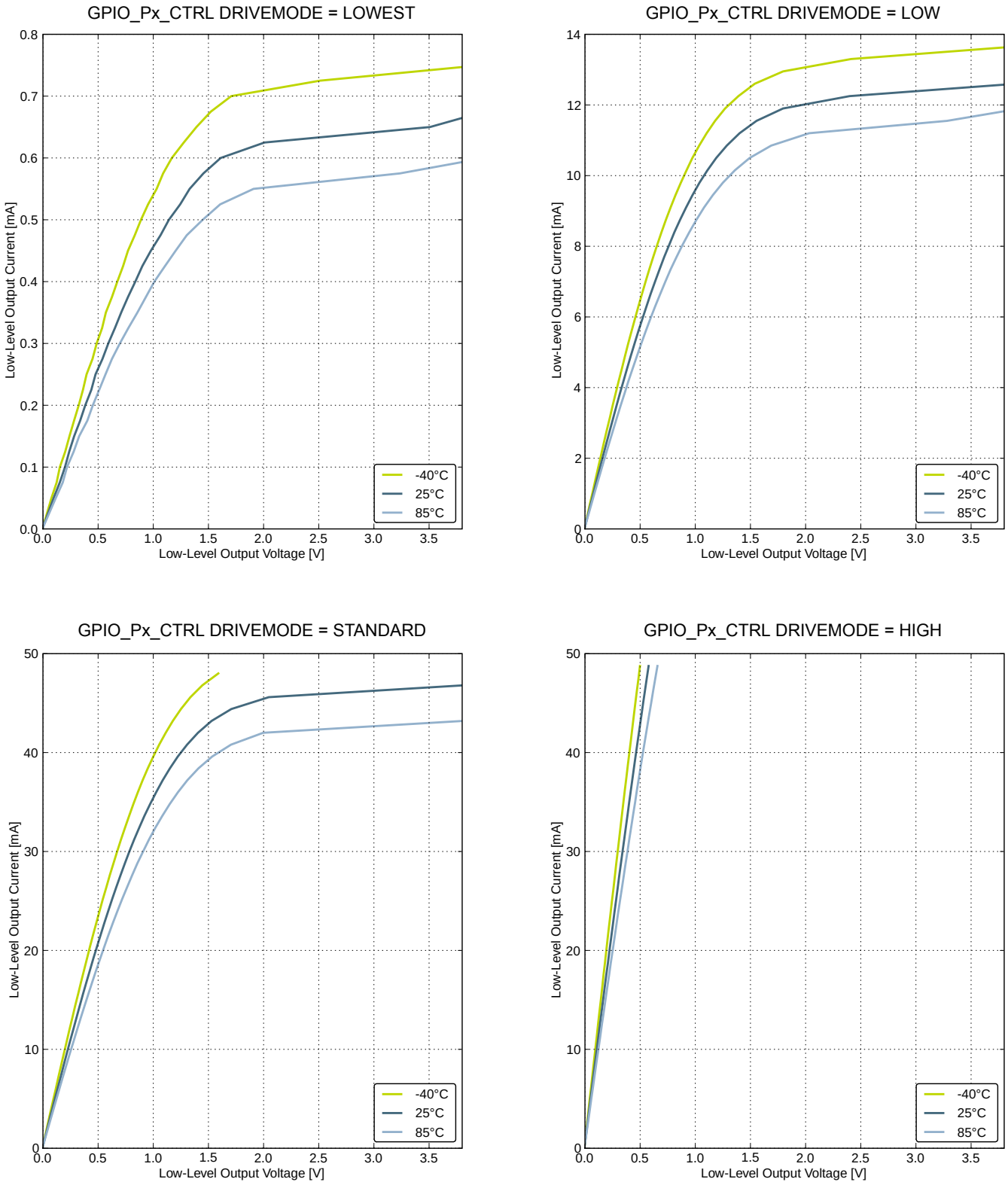

Figure 4.14. Typical Low-Level Output Current, 3.8 V Supply Voltage

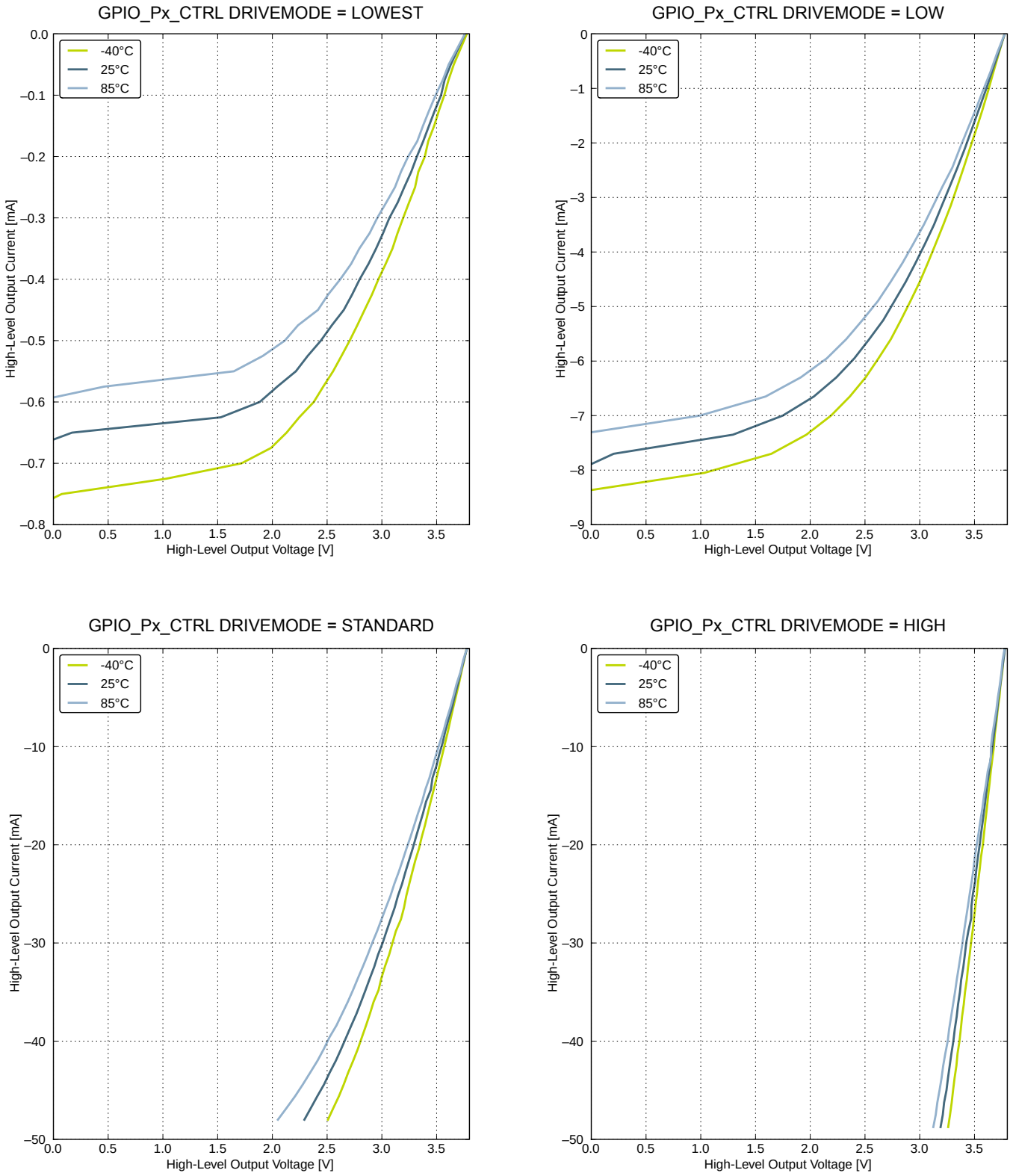

Figure 4.15. Typical High-Level Output Current, 3.8 V Supply Voltage

4.10 Oscillators

4.10.1 LFXO

Table 4.9. LFXO

Parameter	Symbol	Test Condition	Min	Typ	Max	Unit
Supported nominal crystal frequency	f_{LFXO}		—	32.768	—	kHz
Supported crystal equivalent series resistance (ESR)	ESR_{LFXO}		—	30	120	kΩ
Supported crystal external load range	C_{LFXOL}		X[1]	—	25	pF
Current consumption for core and buffer after startup.	I_{LFXO}	ESR=30 kΩ, C_L=10 pF, LFXOBOOST in CMU_CTRL is 1	—	190	—	nA
Start- up time.	t_{LFXO}	ESR=30 kΩ, CL=10 pF, 40% - 60% duty cycle has been reached, LFXOBOOST in CMU_CTRL is 1	—	400	—	ms

Note:
1. See Minimum Load Capacitance (C_{LFXOL}) Requirement For Safe Crystal Startup in Configurator in Simplicity Studio.

For safe startup of a given crystal, the Configurator tool in Simplicity Studio contains a tool to help users configure both load capacitance and software settings for using the LFXO. For details regarding the crystal configuration, refer to the application note, AN0016: Oscillator Design Considerations.

4.10.2 HFXO

Table 4.10. HFXO

Parameter	Symbol	Test Condition	Min	Typ	Max	Unit
Supported nominal crystal Frequency	f_{HFXO}		4	—	48	MHz
Supported crystal equivalent series resistance (ESR)	ESR_{HFXO}	Crystal frequency 48 MHz	—	—	50	Ω
		Crystal frequency 32 MHz	—	30	60	Ω
		Crystal frequency 4 MHz	—	400	1500	Ω
The transconductance of the HFXO input transistor at crystal startup	g_{mHFXO}	HFXOBOOST in CMU_CTRL equals 0b11	20	—	—	mS
Supported crystal external load range	C_{HFXOL}		5	—	25	pF
Current consumption for HFXO after startup	I_{HFXO}	4 MHz: ESR=400 Ω, C_L=20 pF, HFXOBOOST in CMU_CTRL equals 0b11	—	85	—	µA
		32 MHz: ESR=30 Ω, C_L=10 pF, HFXOBOOST in CMU_CTRL equals 0b11	—	165	—	µA
Startup time	t_{HFXO}	32 MHz: ESR=30 Ω, C_L=10 pF, HFXOBOOST in CMU_CTRL equals 0b11	—	400	—	µs

4.10.3 LFRCO

Table 4.11. LFRCO

Parameter	Symbol	Test Condition	Min	Typ	Max	Unit
Oscillation frequency	f_{LFRCO}	V_{DD}= 3.0 V, T_{AMB}=25°C	31.29	32.768	34.28	kHz
		Over full supply and temperature range	26.0	32.768	46.2	kHz
Startup time not including software calibration	t_{LFRCO}		—	150	—	µs
Current consumption	I_{LFRCO}		—	300	—	nA
Frequency step for LSB change in TUNING value	$TUNESTEP_{LFRCO}$		—	1.5	—	%
Voltage drift	V_{DRIFT}		—	-123291	—	ppm/V
Temperature drift	T_{DRIFT}		—	610	—	ppm/°C

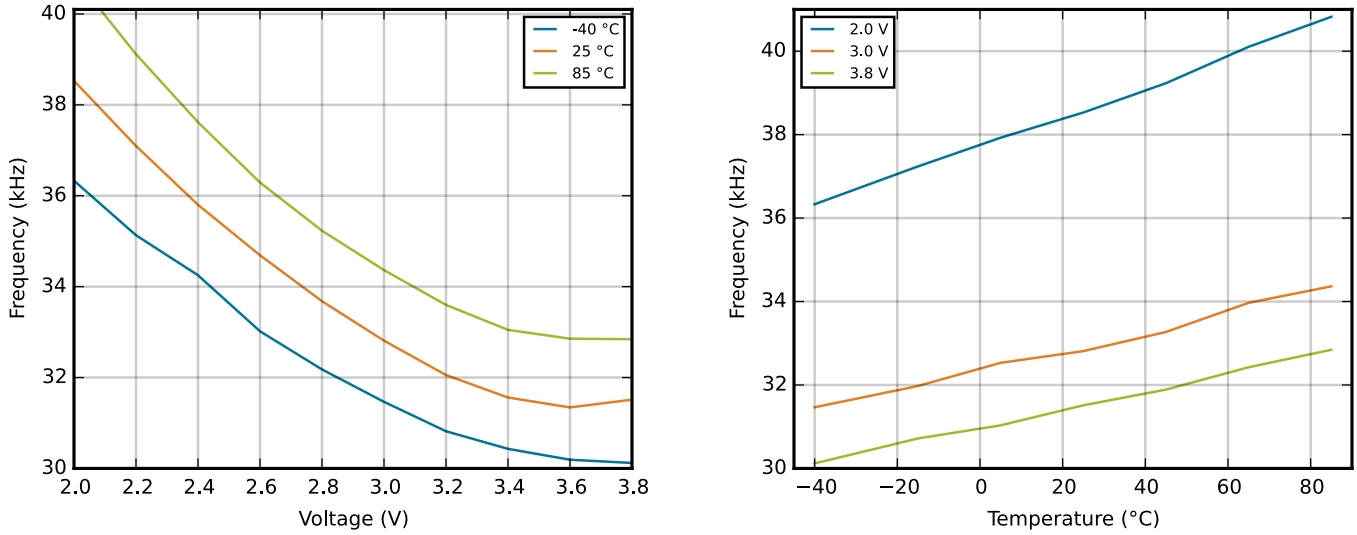

Figure 4.16. Calibrated LFRCO Frequency vs Temperature and Supply Voltage

4.10.4 HFRCO

Table 4.12. HFRCO

Parameter	Symbol	Test Condition	Min	Typ	Max	Unit
Oscillation frequency, all packages except CSP, V_{DD}= 3.0 V, T_{AMB}=25 °C	f_{HFRCO}	f_{HFRCO} = 28 MHz	27.5	28.0	28.5	MHz
		f_{HFRCO} = 21 MHz	20.6	21.0	21.4	MHz
		f_{HFRCO} = 14 MHz	13.7	14.0	14.3	MHz
		f_{HFRCO} = 11 MHz	10.8	11.0	11.2	MHz
		f_{HFRCO} = 6.6 MHz	6.48[1]	6.6[1]	6.72[1]	MHz
		f_{HFRCO} = 1.2 MHz	1.15[2]	1.2[2]	1.25[2]	MHz
Oscillation frequency, all packages except CSP, over full supply and temperature range	f_{HFRCO}	f_{HFRCO} = 28 MHz	24.9	28.0	31.1	MHz
		f_{HFRCO} = 21 MHz	18.8	21.0	23.3	MHz
		f_{HFRCO} = 14 MHz	12.4	14.0	15.6	MHz
		f_{HFRCO} = 11 MHz	9.9	11.0	12.2	MHz
		f_{HFRCO} = 6.6 MHz	5.9[1]	6.6[1]	7.4[1]	MHz
		f_{HFRCO} = 1.2 MHz	0.8[2]	1.2[2]	1.6[2]	MHz
Oscillation frequency, CSP devices, V_{DD}= 3.0 V, T_{AMB}=25 °C	f_{HFRCO}	f_{HFRCO} = 28 MHz	—	28.0	—	MHz
		f_{HFRCO} = 21 MHz	—	21.0	—	MHz
		f_{HFRCO} = 14 MHz	—	14.0	—	MHz
		f_{HFRCO} = 11 MHz	—	11.0	—	MHz
		f_{HFRCO} = 6.6 MHz	—	6.6[1]	—	MHz
		f_{HFRCO} = 1.2 MHz	—	1.2[2]	—	MHz
Oscillation frequency, CSP devices, over full supply and temperature range	f_{HFRCO}	f_{HFRCO} = 28 MHz	—	28.0	—	MHz
		f_{HFRCO} = 21 MHz	—	21.0	—	MHz
		f_{HFRCO} = 14 MHz	—	14.0	—	MHz
		f_{HFRCO} = 11 MHz	—	11.0	—	MHz
		f_{HFRCO} = 6.6 MHz	—	6.6[1]	—	MHz
		f_{HFRCO} = 1.2 MHz	—	1.2[2]	—	MHz
Settling time after start-up	$t_{HFRCO_settling}$	f_{HFRCO} = 14 MHz	—	0.6	—	Cycles
Current consumption	I_{HFRCO}	f_{HFRCO} = 28 MHz	—	165	215	µA
		f_{HFRCO} = 21 MHz	—	134	175	µA
		f_{HFRCO} = 14 MHz	—	106	140	µA
		f_{HFRCO} = 11 MHz	—	94	125	µA
		f_{HFRCO} = 6.6 MHz	—	77	105	µA
		f_{HFRCO} = 1.2 MHz	—	25	40	µA

Parameter	Symbol	Test Condition	Min	Typ	Max	Unit
Voltage drift	V_{HFRCO_DRIFT}	f_{HFRCO} = 28 MHz	—	10768	—	ppm/V
		f_{HFRCO} = 21 MHz	—	8939	—	ppm/V
		f_{HFRCO} = 14 MHz	—	8040	—	ppm/V
		f_{HFRCO} = 11 MHz	—	7719	—	ppm/V
		f_{HFRCO} = 6.6 MHz	—	8491	—	ppm/V
		f_{HFRCO} = 1.2 MHz	—	-124035	—	ppm/V
Temperature drift	T_{HFRCO_DRIFT}	f_{HFRCO} = 28 MHz	—	91	—	ppm/°C
		f_{HFRCO} = 21 MHz	—	88	—	ppm/°C
		f_{HFRCO} = 14 MHz	—	43	—	ppm/°C
		f_{HFRCO} = 11 MHz	—	50	—	ppm/°C
		f_{HFRCO} = 6.6 MHz	—	-50	—	ppm/°C
		f_{HFRCO} = 1.2 MHz	—	83	—	ppm/°C
Frequency step for LSB change in TUNING value	$TUNESTEP_{HFRCO}$		—	0.3[3]	—	%

Note:

1. For devices with prod. rev. < 19, Typ = 7MHz and Min/Max values not applicable.
2. For devices with prod. rev. < 19, Typ = 1MHz and Min/Max values not applicable.
3. The TUNING field in the CMU_HFRCOCTRL register may be used to adjust the HFRCO frequency. There is enough adjustment range to ensure that the frequency bands above 7 MHz will always have some overlap across supply voltage and temperature. By using a stable frequency reference such as the LFXO or HFXO, a firmware calibration routine can vary the TUNING bits and the frequency band to maintain the HFRCO frequency at any arbitrary value between 7 MHz and 28 MHz across operating conditions.

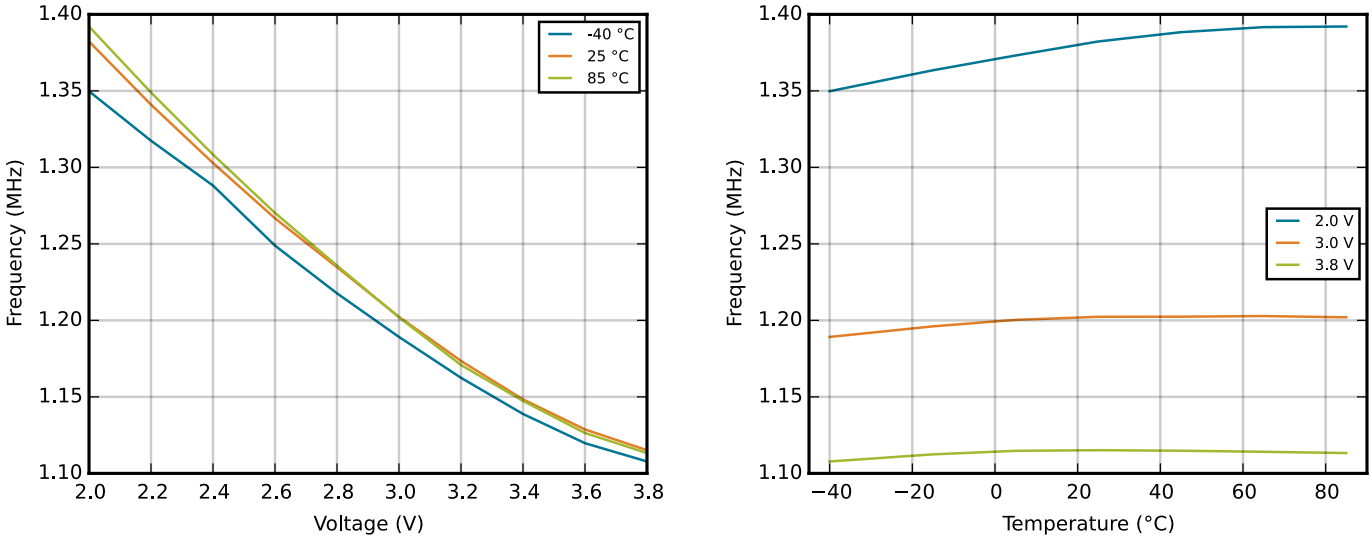

Figure 4.17. Calibrated HFRCO 1 MHz Band Frequency vs Supply Voltage and Temperature

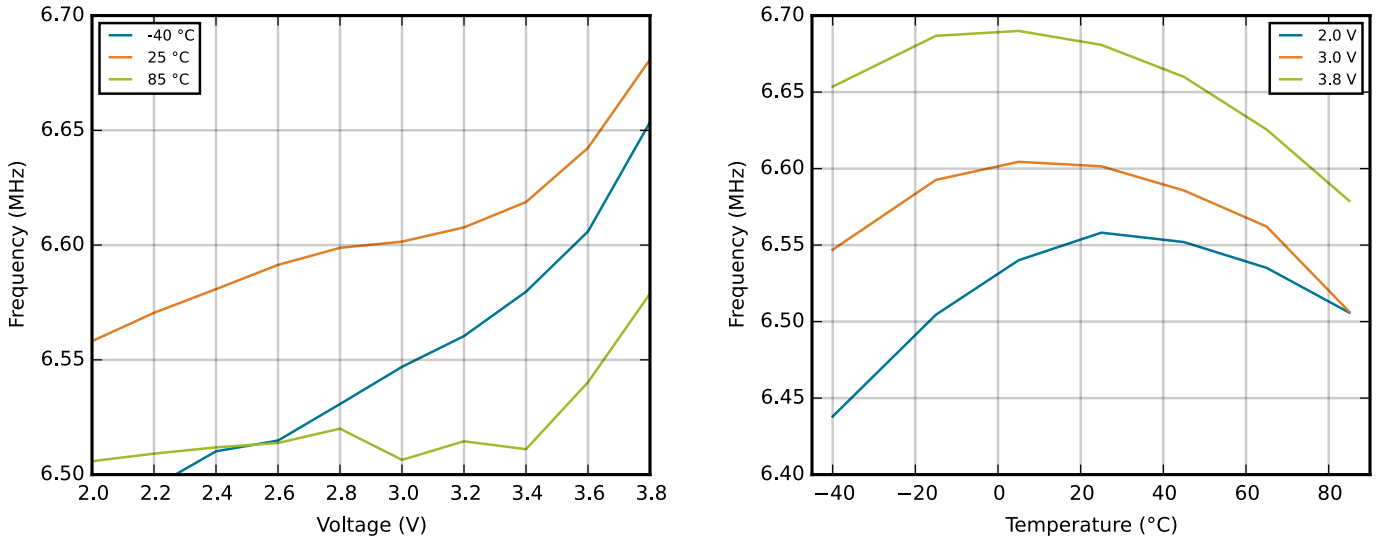

Figure 4.18. Calibrated HFRCO 7 MHz Band Frequency vs Supply Voltage and Temperature

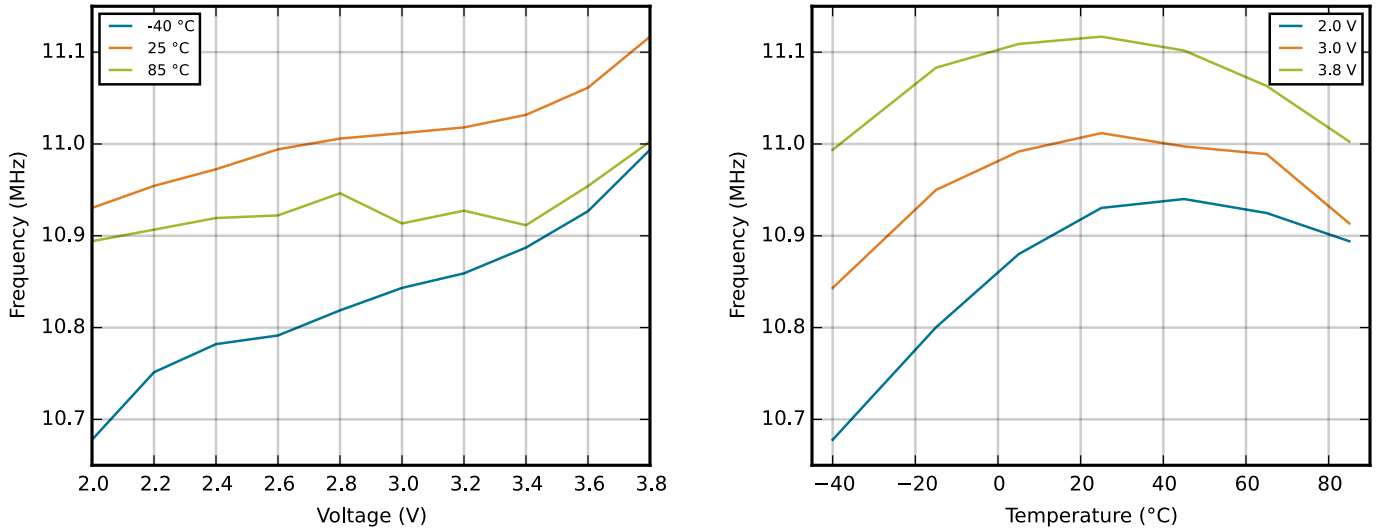

Figure 4.19. Calibrated HFRCO 11 MHz Band Frequency vs Supply Voltage and Temperature

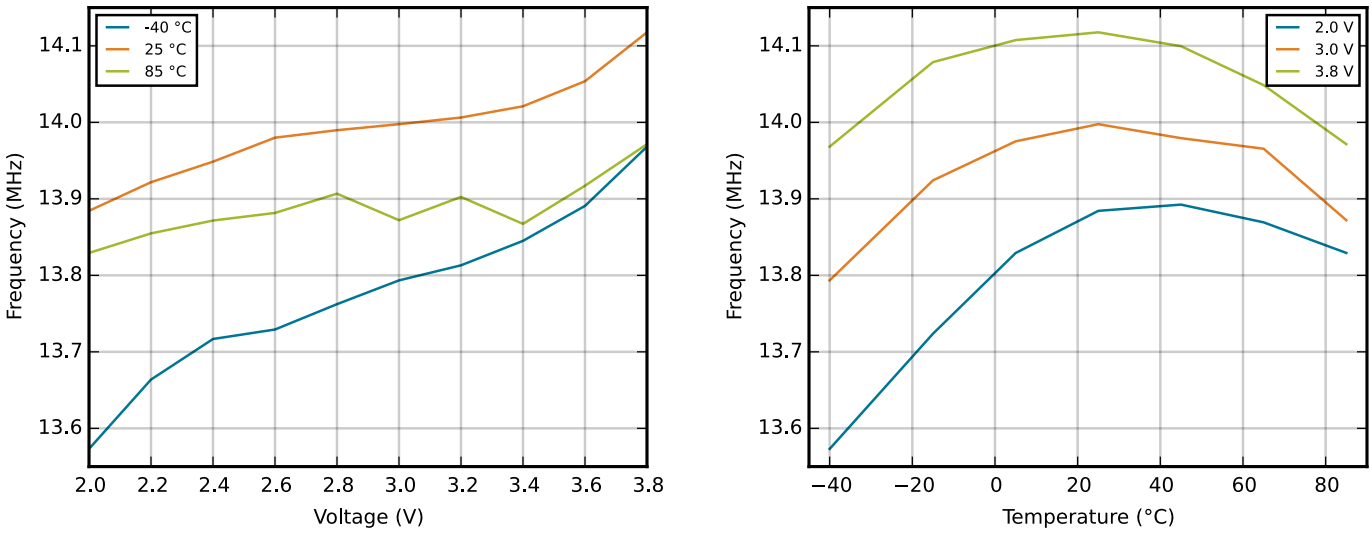

Figure 4.20. Calibrated HFRCO 14 MHz Band Frequency vs Supply Voltage and Temperature

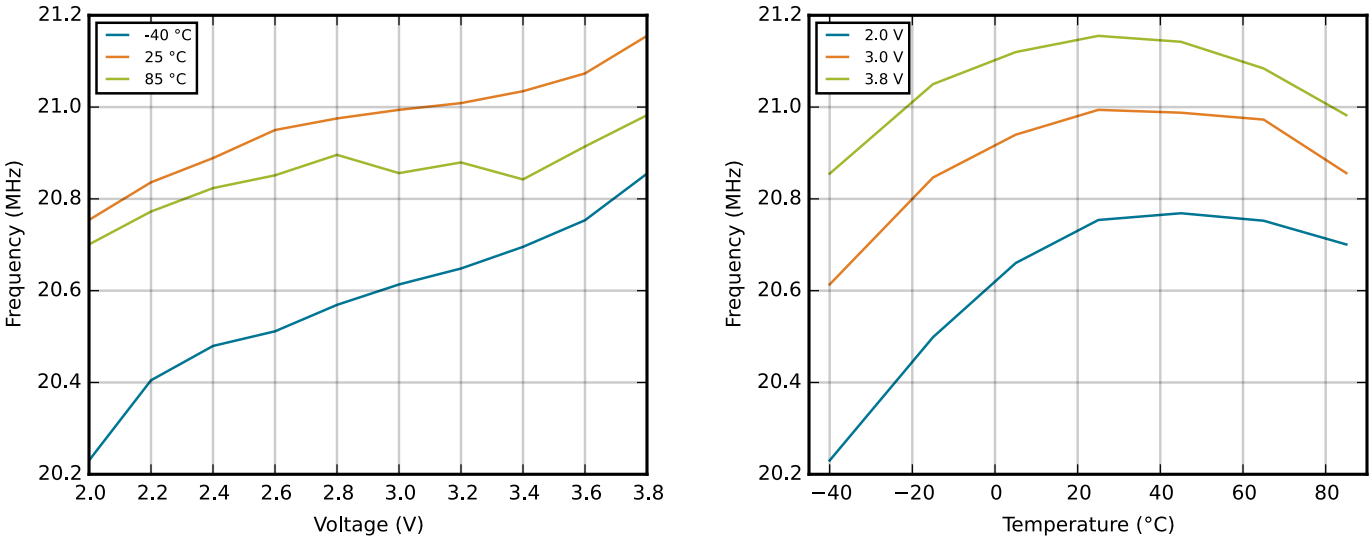

Figure 4.21. Calibrated HFRCO 21 MHz Band Frequency vs Supply Voltage and Temperature

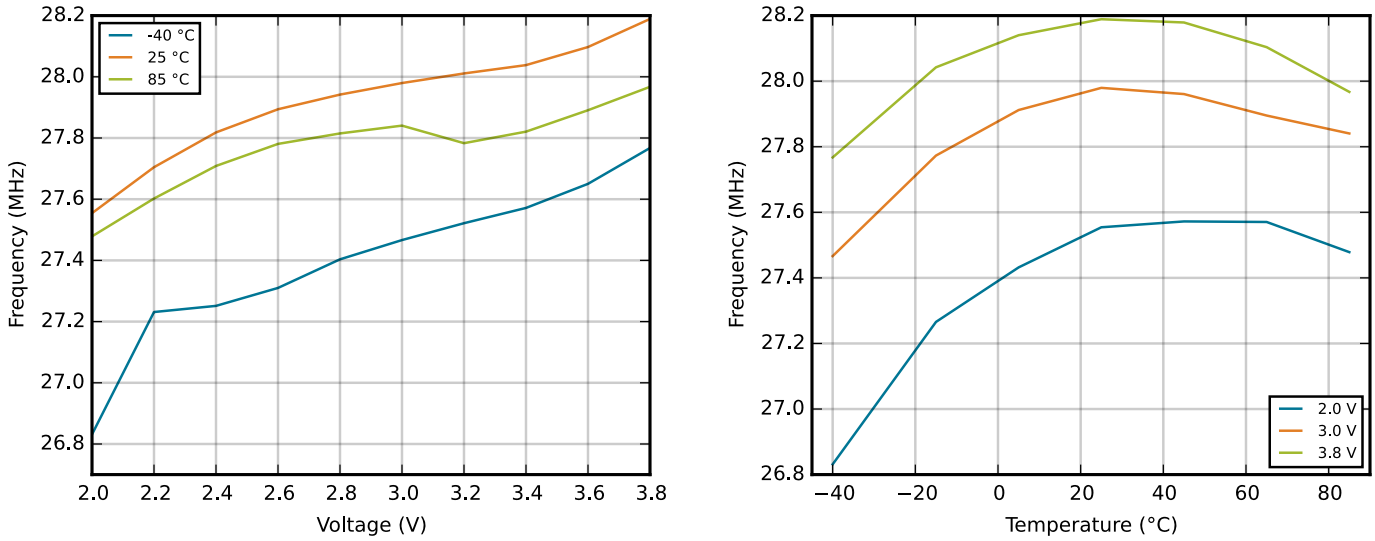

Figure 4.22. Calibrated HFRCO 28 MHz Band Frequency vs Supply Voltage and Temperature

4.10.5 AUXHFRCO

Table 4.13. AUXHFRCO

Parameter	Symbol	Test Condition	Min	Typ	Max	Unit
Oscillation frequency, all packages except CSP, V_{DD}= 3.0 V, T_{AMB}=25 °C	$f_{AUXHFRCO}$	$f_{AUXHFRCO}$ = 28 MHz	27.5	28.0	28.5	MHz
		$f_{AUXHFRCO}$ = 21 MHz	20.6	21.0	21.4	MHz
		$f_{AUXHFRCO}$ = 14 MHz	13.7	14.0	14.3	MHz
		$f_{AUXHFRCO}$ = 11 MHz	10.8	11.0	11.2	MHz
		$f_{AUXHFRCO}$ = 6.6 MHz	6.48[1]	6.60[1]	6.72[1]	MHz
		$f_{AUXHFRCO}$ = 1.2 MHz	1.15[2]	1.20[2]	1.25[2]	MHz
Oscillation frequency, CSP devices, V_{DD}= 3.0 V, T_{AMB}=25 °C	$f_{AUXHFRCO}$	$f_{AUXHFRCO}$ = 28 MHz	—	28.0	—	MHz
		$f_{AUXHFRCO}$ = 21 MHz	—	21.0	—	MHz
		$f_{AUXHFRCO}$ = 14 MHz	—	14.0	—	MHz
		$f_{AUXHFRCO}$ = 11 MHz	—	11.0	—	MHz
		$f_{AUXHFRCO}$ = 6.6 MHz	—	6.60[1]	—	MHz
		$f_{AUXHFRCO}$ = 1.2 MHz	—	1.20[2]	—	MHz
Settling time after start-up	$t_{AUXHFRCO_settling}$	$f_{AUXHFRCO}$ = 14 MHz	—	0.6	—	Cycles
Frequency step for LSB change in TUNING value	$TUNE\text{-}STEP_{AUXHFRCO}$		—	0.3[3]	—	%

Note:

1. For devices with prod. rev. < 19, Typ = 7MHz and Min/Max values not applicable.
2. For devices with prod. rev. < 19, Typ = 1MHz and Min/Max values not applicable.
3. The TUNING field in the CMU_AUXHFRCOCTRL register may be used to adjust the AUXHFRCO frequency. There is enough adjustment range to ensure that the frequency bands above 7 MHz will always have some overlap across supply voltage and temperature. By using a stable frequency reference such as the LFXO or HFXO, a firmware calibration routine can vary the TUNING bits and the frequency band to maintain the AUXHFRCO frequency at any arbitrary value between 7 MHz and 28 MHz across operating conditions.

4.10.6 ULFRCO

Table 4.14. ULFRCO

Parameter	Symbol	Test Condition	Min	Typ	Max	Unit
Oscillation frequency	f_{ULFRCO}	25 °C, 3 V	0.7	—	1.75	kHz
Temperature coefficient	TC_{ULFRCO}		—	0.05	—	%/°C
Supply voltage coefficient	VC_{ULFRCO}		—	-18.2	—	%/V

4.11 Analog Digital Converter (ADC)

Table 4.15. ADC

Parameter	Symbol	Test Condition	Min	Typ	Max	Unit
Input voltage range	V_{ADCIN}	Single-ended	0	—	V_{REF}	V
		Differential	$-V_{REF}/2$	—	$V_{REF}/2$	V
Input range of external reference voltage, single-ended and differential	$V_{ADCREFIN}$		1.25	—	V_{DD}	V
Input range of external negative reference voltage on channel 7	$V_{ADCREFIN_CH7}$	See $V_{ADCREFIN}$	0	—	V_{DD} - 1.1	V
Input range of external positive reference voltage on channel 6	$V_{ADCREFIN_CH6}$	See $V_{ADCREFIN}$	0.625	—	V_{DD}	V
Common mode input range	$V_{ADCCMIN}$		0	—	V_{DD}	V
Input current	I_{ADCIN}	2 pF sampling capacitors	—	<100	—	nA
Analog input common mode rejection ratio	$CMRR_{ADC}$		—	65	—	dB
Average active current	I_{ADC}	1 MSamples/s, 12 bit, external reference	—	351 [1]	—	µA
		10 kSamples/s 12 bit, internal 1.25 V reference, WARMUP-MODE in ADCn_CTRL set to 0b00	—	67 [1]	—	µA
		10 kSamples/s 12 bit, internal 1.25 V reference, WARMUP-MODE in ADCn_CTRL set to 0b01	—	63 [1]	—	µA
		10 kSamples/s 12 bit, internal 1.25 V reference, WARMUP-MODE in ADCn_CTRL set to 0b10	—	64 [1]	—	µA
Input capacitance	C_{ADCIN}		—	2	—	pF
Input ON resistance	R_{ADCIN}		300	—	800	Ω
Input RC filter resistance	$R_{ADCFILT}$		—	10	—	kΩ
Input RC filter/decoupling capacitance	$C_{ADCFILT}$		—	250	—	fF
Input bias current	$I_{ADCBIASIN}$	VSS < VIN < VDD	-40	—	40	nA
Input offset current	$I_{ADCOFFSETIN}$	VSS < VIN < VDD	-40	—	40	nA
ADC Clock Frequency	f_{ADCCLK}		—	—	13	MHz
Conversion time	$t_{ADCCONV}$	6 bit	7	—	—	ADCCLK Cycles
		8 bit	11	—	—	ADCCLK Cycles
		12 bit	13	—	—	ADCCLK Cycles

Parameter	Symbol	Test Condition	Min	Typ	Max	Unit
Acquisition time	t_{ADCACQ}	Programmable	1	—	256	ADCCLK Cycles
Required acquisition time for VDD/3 reference	$t_{ADCACQVDD3}$		2	—	—	µs
Startup time of reference generator and ADC core	$t_{ADCSTART}$	NORMAL mode	—	5	—	µs
		KEEPADCWARM mode	—	1	—	µs
Signal-to-Noise Ratio (SNR)	SNR_{ADC}	1 MSamples/s, 12 bit, single-ended, internal 1.25 V reference	—	59	—	dB
		1 MSamples/s, 12 bit, single-ended, internal 2.5 V reference	—	63	—	dB
		1 MSamples/s, 12 bit, single-ended, VDD reference	—	65	—	dB
		1 MSamples/s, 12 bit, differential, internal 1.25 V reference	—	60	—	dB
		1 MSamples/s, 12 bit, differential, internal 2.5 V reference	—	65	—	dB
		1 MSamples/s, 12 bit, differential, 5 V reference	—	54	—	dB
		1 MSamples/s, 12 bit, differential, VDD reference	—	67	—	dB
		1 MSamples/s, 12 bit, differential, 2xVDD reference	—	69	—	dB
		200 kSamples/s, 12 bit, single-ended, internal 1.25 V reference	—	62	—	dB
		200 kSamples/s, 12 bit, single-ended, internal 2.5 V reference	—	63	—	dB
		200 kSamples/s, 12 bit, single-ended, VDD reference	—	67	—	dB
		200 kSamples/s, 12 bit, differential, internal 1.25 V reference	—	63	—	dB
		200 kSamples/s, 12 bit, differential, internal 2.5 V reference	—	66	—	dB
		200 kSamples/s, 12 bit, differential, 5 V reference	—	66	—	dB
		200 kSamples/s, 12 bit, differential, VDD reference	63	66	—	dB
		200 kSamples/s, 12 bit, differential, 2xVDD reference	—	70	—	dB

Parameter	Symbol	Test Condition	Min	Typ	Max	Unit
Signal-to-Noise And Distortion Ratio (SINAD)	$SINAD_{ADC}$	1 MSamples/s, 12 bit, single-ended, internal 1.25V reference	—	58	—	dB
		1 MSamples/s, 12 bit, single-ended, internal 2.5 V reference	—	62	—	dB
		1 MSamples/s, 12 bit, single-ended, VDD reference	—	64	—	dB
		1 MSamples/s, 12 bit, differential, internal 1.25 V reference	—	60	—	dB
		1 MSamples/s, 12 bit, differential, internal 2.5 V reference	—	64	—	dB
		1 MSamples/s, 12 bit, differential, 5 V reference	—	54	—	dB
		1 MSamples/s, 12 bit, differential, VDD reference	—	66	—	dB
		1 MSamples/s, 12 bit, differential, 2xVDD reference	—	68	—	dB
		200 kSamples/s, 12 bit, single-ended, internal 1.25 V reference	—	61	—	dB
		200 kSamples/s, 12 bit, single-ended, internal 2.5 V reference	—	65	—	dB
		200 kSamples/s, 12 bit, single-ended, VDD reference	—	66	—	dB
		200 kSamples/s, 12 bit, differential, internal 1.25 V reference	—	63	—	dB
		200 kSamples/s, 12 bit, differential, internal 2.5 V reference	—	66	—	dB
		200 kSamples/s, 12 bit, differential, 5V reference	—	66	—	dB
		200 kSamples/s, 12 bit, differential, VDD reference	62	66	—	dB
		200 kSamples/s, 12 bit, differential, 2xVDD reference	—	69	—	dB

Parameter	Symbol	Test Condition	Min	Typ	Max	Unit
Spurious-Free Dynamic Range (SFDR)	$SFDR_{ADC}$	1 MSamples/s, 12 bit, single-ended, internal 1.25 V reference	—	64	—	dBc
		1 MSamples/s, 12 bit, single-ended, internal 2.5 V reference	—	76	—	dBc
		1 MSamples/s, 12 bit, single-ended, VDD reference	—	73	—	dBc
		1 MSamples/s, 12 bit, differential, internal 1.25 V reference	—	66	—	dBc
		1 MSamples/s, 12 bit, differential, internal 2.5 V reference	—	77	—	dBc
		1 MSamples/s, 12 bit, differential, VDD reference	—	76	—	dBc
		1 MSamples/s, 12 bit, differential, 2xVDD reference	—	75	—	dBc
		1 MSamples/s, 12 bit, differential, 5 V reference	—	69	—	dBc
		200 kSamples/s, 12 bit, single-ended, internal 1.25 V reference	—	75	—	dBc
		200 kSamples/s, 12 bit, single-ended, internal 2.5 V reference	—	75	—	dBc
		200 kSamples/s, 12 bit, single-ended, VDD reference	—	76	—	dBc
		200 kSamples/s, 12 bit, differential, internal 1.25 V reference	—	79	—	dBc
		200 kSamples/s, 12 bit, differential, internal 2.5 V reference	—	79	—	dBc
		200 kSamples/s, 12 bit, differential, 5 V reference	—	78	—	dBc
		200 kSamples/s, 12 bit, differential, VDD reference	68	79	—	dBc
		200 kSamples/s, 12 bit, differential, 2xVDD reference	—	79	—	dBc
Offset voltage	$V_{ADCOFFSET}$	After calibration, single-ended	-3.5	0.3	3	mV
		After calibration, differential	—	0.3	—	mV
Thermometer output gradient	$TGRAD_{ADCTH}$		—	-1.92	—	mV/°C
			—	-6.3	—	ADC Codes/°C
Differential non-linearity (DNL)	DNL_{ADC}	V_{DD}= 3.0 V, external 2.5 V reference	-1	±0.7	4	LSB
Integral non-linearity (INL), End point method	INL_{ADC}	V_{DD}= 3.0 V, external 2.5 V reference	—	±1.2	±3	LSB
Missing codes	MC_{ADC}		11.999 [2]	12	—	bits
Gain error drift	$GAIN_{ED}$	1.25 V reference	—	0.01 [3]	0.033 [4]	%/°C
		2.5 V reference	—	0.01 [3]	0.03 [4]	%/°C

Parameter	Symbol	Test Condition	Min	Typ	Max	Unit
Offset error drift	$OFFSET_{ED}$	1.25 V reference	—	0.2 [3]	0.7 [4]	LSB/°C
		2.5 V reference	—	0.2 [3]	0.62 [4]	LSB/°C
VREF voltage	V_{REF}	1.25 V reference	1.2	1.25	1.3	V
		2.5 V reference	2.4	2.5	2.6	V
VREF voltage drift	V_{REF_VDRIFT}	1.25 V reference	-12.4	2.9	18.2	mV/V
		2.5 V reference, VDD > 2.5 V	-24.6	5.7	35.2	mV/V
VREF temperature drift	V_{REF_TDRIFT}	1.25 V reference	-132	272	677	µV/°C
		2.5 V reference	-231	545	1271	µV/°C
VREF current consumption	I_{VREF}	1.25 V reference	—	67	114	µA
		2.5 V reference	—	55	82	µA
ADC and DAC VREF matching	V_{REF_MATCH}	1.25 V reference	—	99.85	—	%
		2.5 V reference	—	100.01	—	%

Note:

1. Includes required contribution from the voltage reference.
2. On the average every ADC will have one missing code, most likely to appear around 2048 +/- n*512 where n can be a value inthe set {-3, -2, -1, 1, 2, 3}. There will be no missing code around 2048, and in spite of the missing code the ADC will be monotonicat all times so that a response to a slowly increasing input will always be a slowly increasing output. Around the one code that is-missing, the neighbour codes will look wider in the DNL plot. The spectra will show spurs on the level of -78dBc for a full scalein-put for chips that have the missing code issue.
3. Typical numbers given by abs(Mean) / (85 - 25).
4. Max number given by (abs(Mean) + 3x stddev) / (85 - 25).

The integral non-linearity (INL) and differential non-linearity parameters are explained in the following two figures.

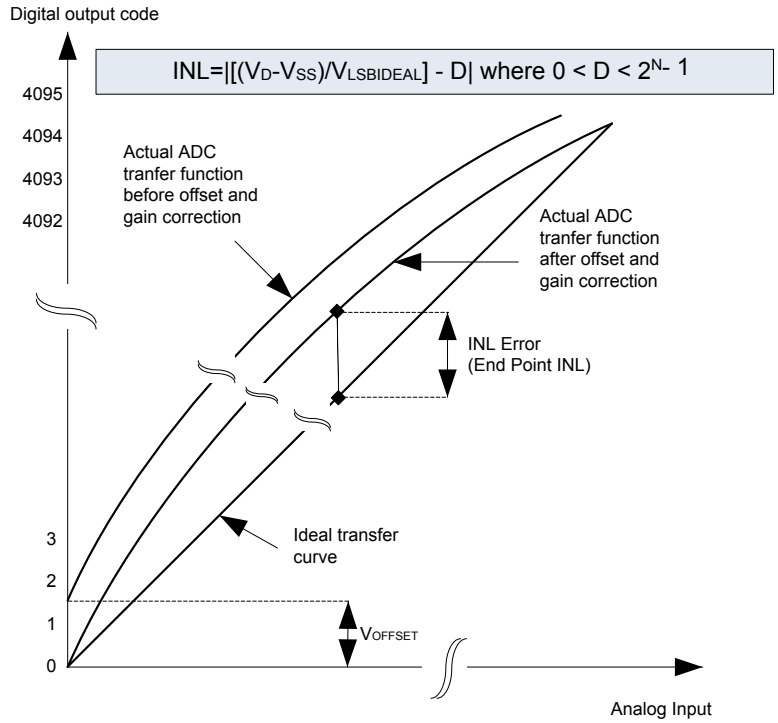

Figure 4.23. Integral Non-Linearity (INL)

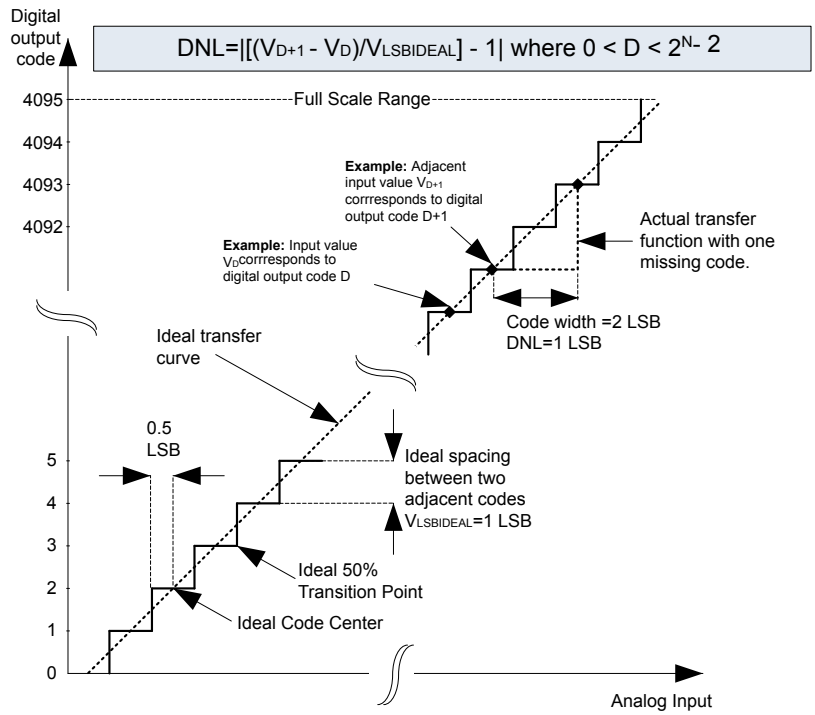

Figure 4.24. Differential Non-Linearity (DNL)

4.11.1 Typical Performance

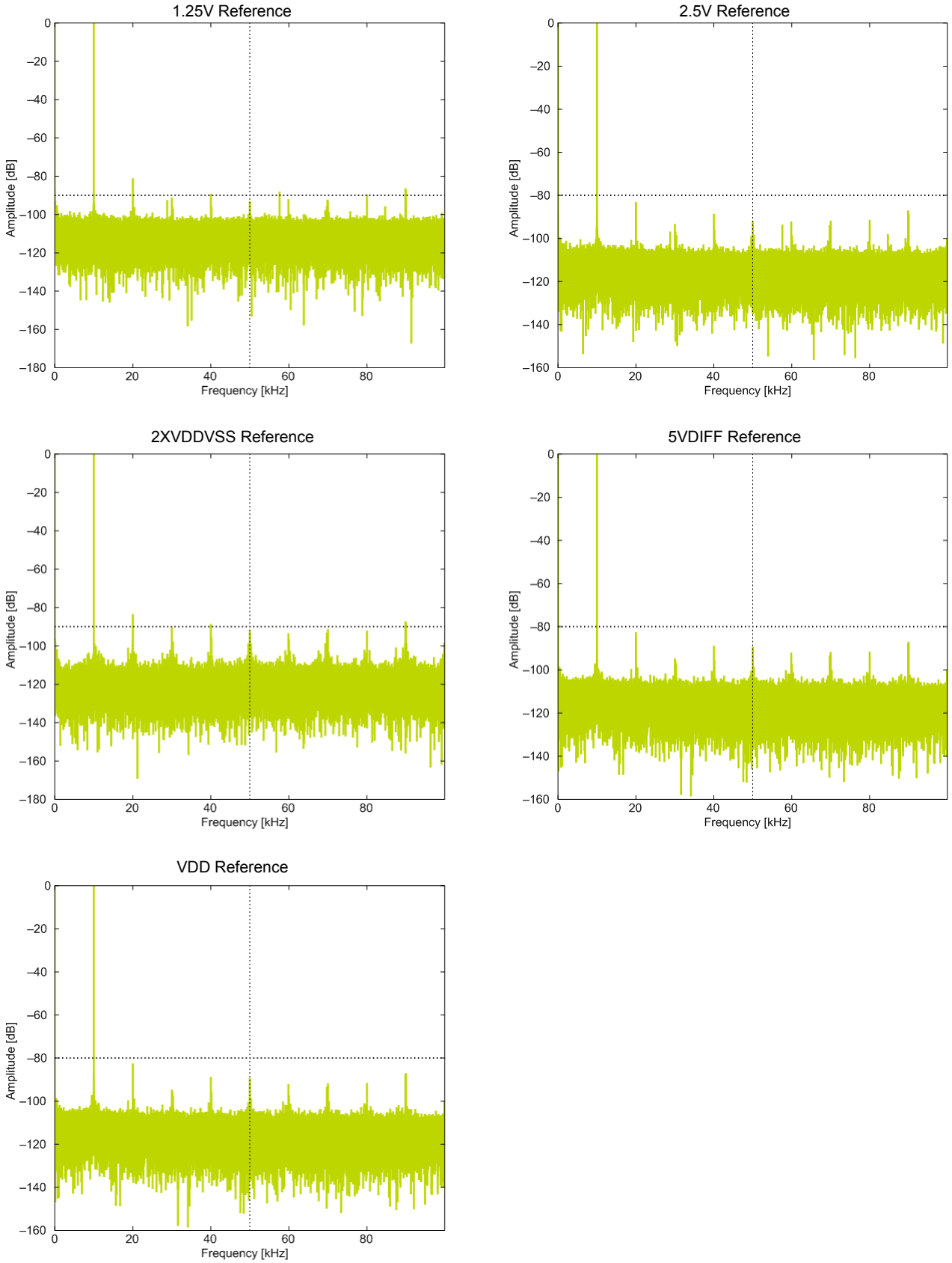

Figure 4.25. ADC Frequency Spectrum, VDD = 3 V, Temp = 25 °C

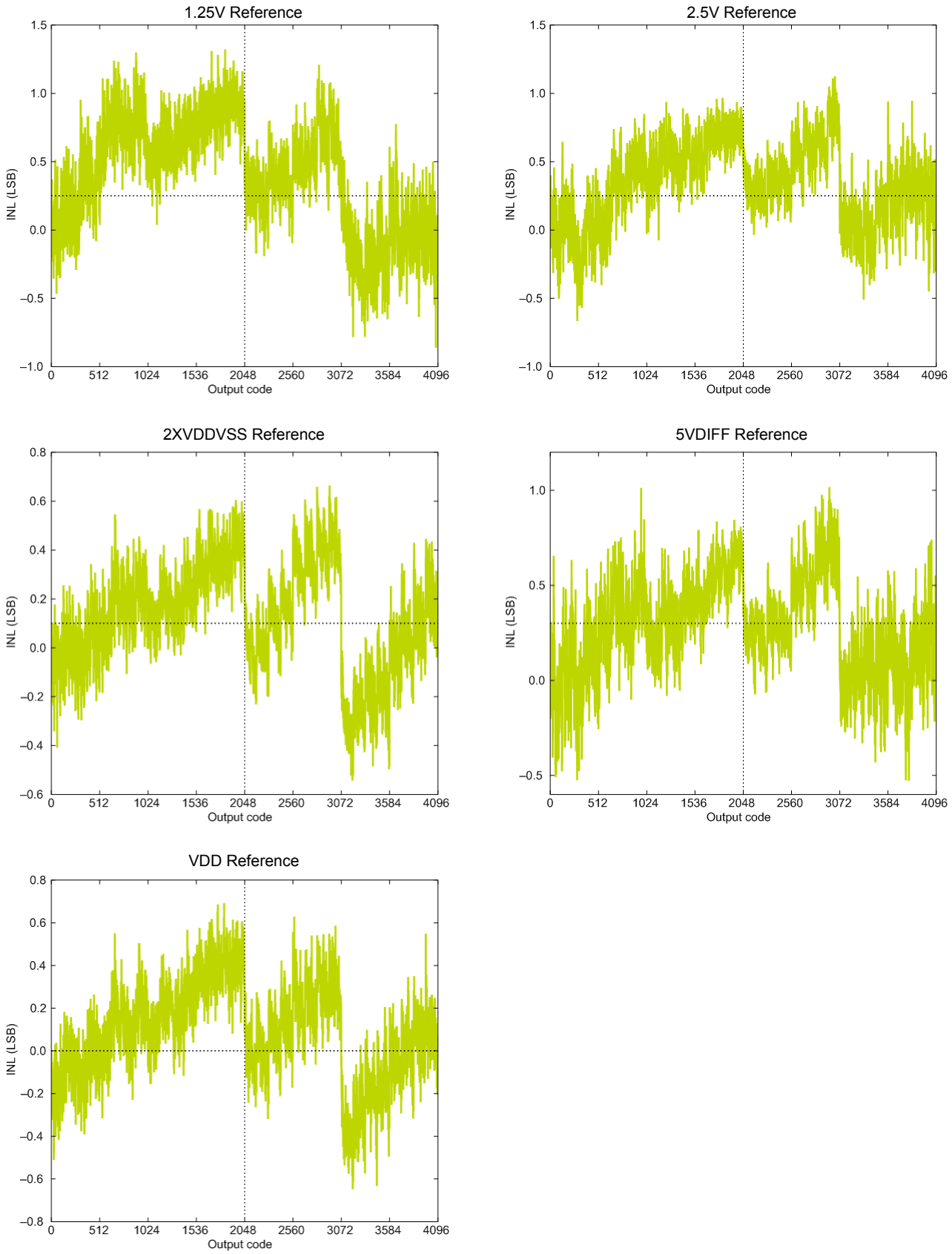

Figure 4.26. ADC Integral Linearity Error vs Code, VDD = 3 V, Temp = 25 °C

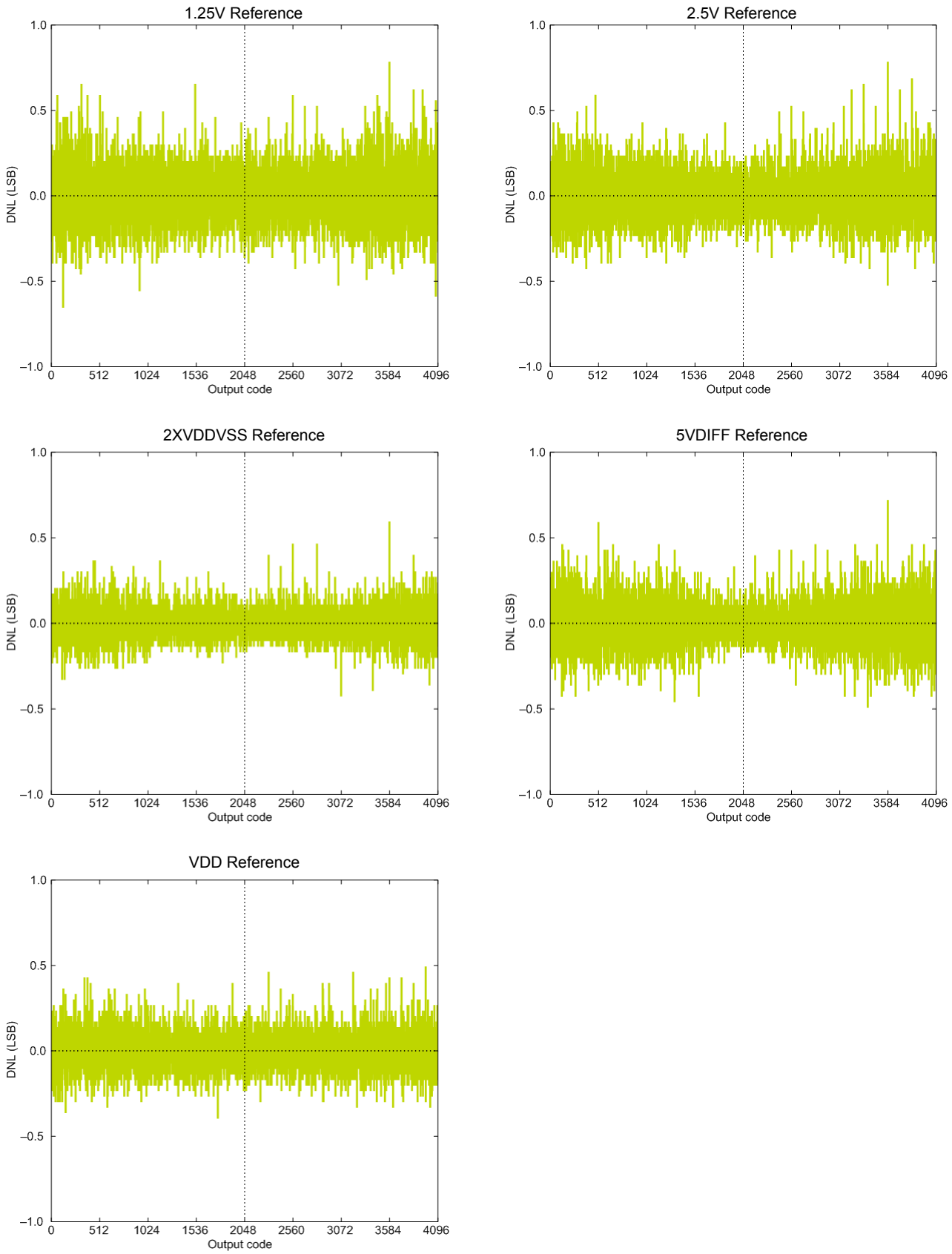

Figure 4.27. ADC Differential Linearity Error vs Code, VDD = 3 V, Temp = 25 °C

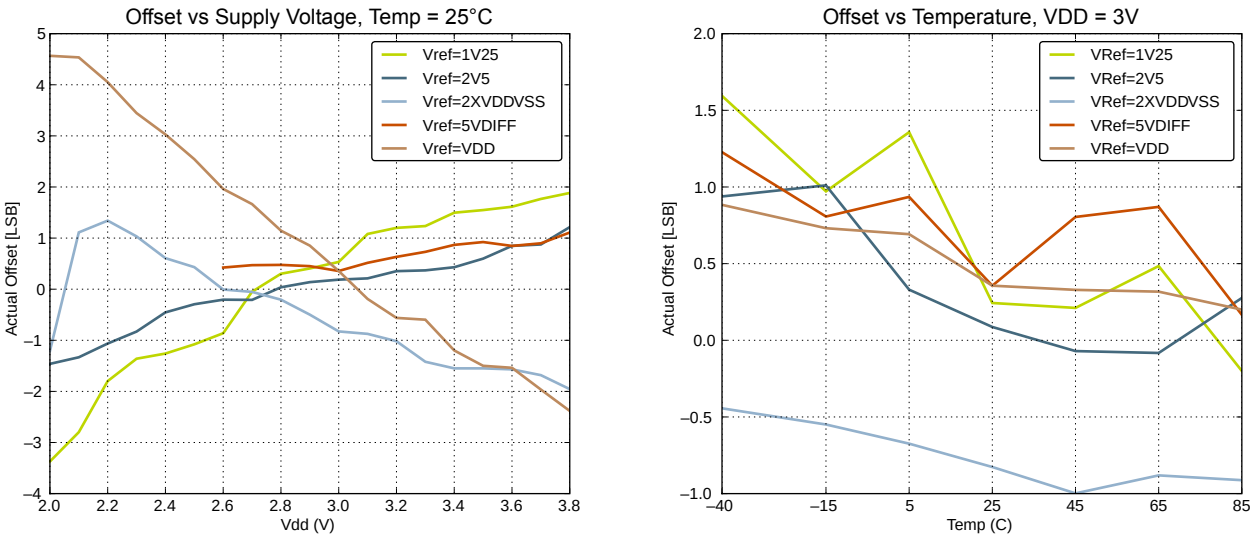

Figure 4.28. ADC Absolute Offset, Common Mode = VDD/2

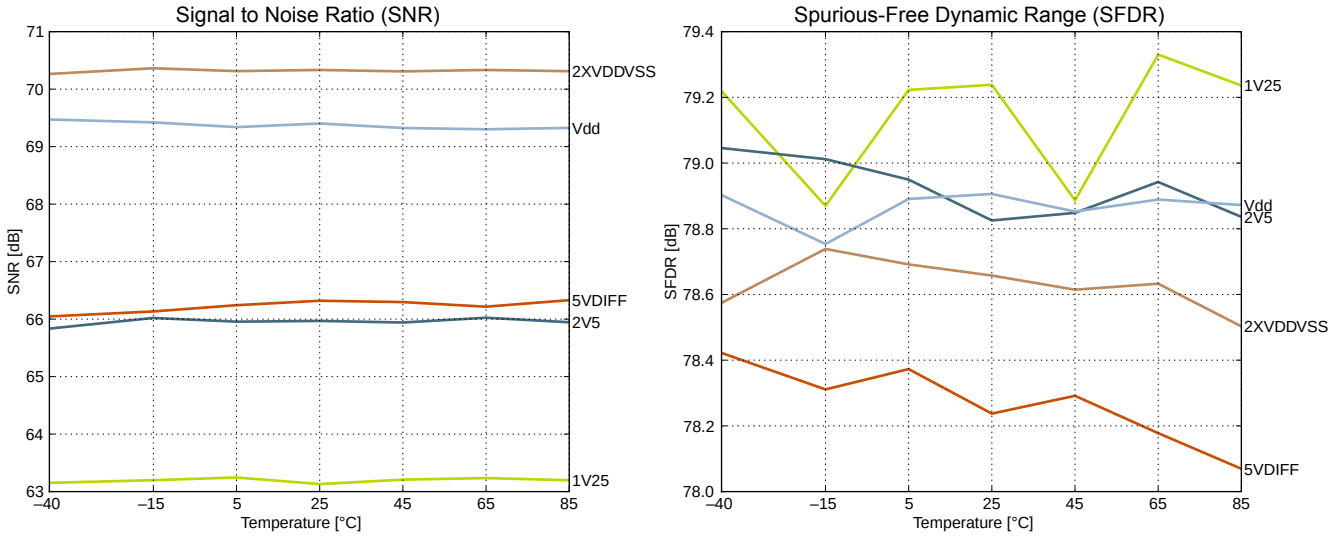

Figure 4.29. ADC Dynamic Performance vs Temperature for all ADC References, VDD = 3 V

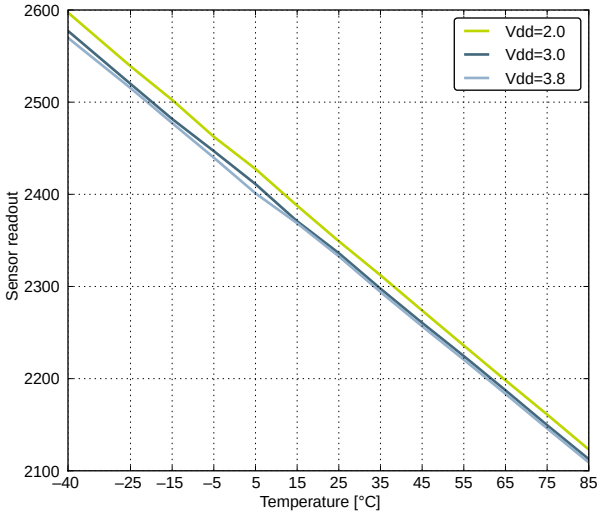

Figure 4.30. ADC Temperature Sensor Readout

4.12 Digital Analog Converter (DAC)

Table 4.16. DAC

Parameter	Symbol	Test Condition	Min	Typ	Max	Unit
Output voltage range	V_{DACOUT}	VDD voltage reference, single-ended	0	—	V_{DD}	V
		VDD voltage reference, differential	$-V_{DD}$	—	V_{DD}	V
Output common mode voltage range	V_{DACCM}		0	—	V_{DD}	V
Average active current	I_{DAC}	500 kSamples/s, 12-bit, internal 1.25 V reference, Continuous Mode	—	400[1]	—	µA
		100 kSamples/s, 12-bit, internal 1.25 V reference, Sample/Hold Mode	—	200[1]	—	µA
		1 kSamples/s 12-bit, internal 1.25 V reference, Sample/Off Mode	—	17[1]	—	µA
Sample rate	SR_{DAC}		—	—	500	ksamples/s
DAC clock frequency	f_{DAC}	Continuous Mode	—	—	1000	kHz
		Sample/Hold Mode	—	—	250	kHz
		Sample/Off Mode	—	—	250	kHz
Clock cycles per conversion	$CYC_{DAC-CONV}$		—	2	—	cycles
Conversion time	$t_{DACCONV}$		2	—	—	µs
Settling time	$t_{DACSET-TLE}$		—	5	—	µs
Signal-to-Noise Ratio (SNR)	SNR_{DAC}	500 kSamples/s, 12 bit, single-ended, internal 1.25 V reference	—	58	—	dB
		500 kSamples/s, 12 bit, single-ended, internal 2.5 V reference	—	59	—	dB
		500 kSamples/s, 12 bit, differential, internal 1.25 V reference	—	58	—	dB
		500 kSamples/s, 12 bit, differential, internal 2.5 V reference	—	58	—	dB
		500 kSamples/s, 12 bit, differential, V_{DD} reference	—	59	—	dB
Signal-to-Noise plus Distortion Ratio (SNDR)	$SNDR_{DAC}$	500 kSamples/s, 12 bit, single-ended, internal 1.25 V reference	—	57	—	dB
		500 kSamples/s, 12 bit, single-ended, internal 2.5 V reference	—	54	—	dB
		500 kSamples/s, 12 bit, differential, internal 1.25 V reference	—	56	—	dB
		500 kSamples/s, 12 bit, differential, internal 2.5 V reference	—	53	—	dB
		500 kSamples/s, 12 bit, differential, V_{DD} reference	—	55	—	dB

Parameter	Symbol	Test Condition	Min	Typ	Max	Unit
Spurious-Free Dynamic Range (SFDR)	$SFDR_{DAC}$	500 kSamples/s, 12 bit, single-ended, internal 1.25 V reference	—	62	—	dBc
		500 kSamples/s, 12 bit, single-ended, internal 2.5 V reference	—	56	—	dBc
		500 kSamples/s, 12 bit, differential, internal 1.25 V reference	—	61	—	dBc
		500 kSamples/s, 12 bit, differential, internal 2.5 V reference	—	55	—	dBc
		500 kSamples/s, 12 bit, differential, V_{DD} reference	—	60	—	dBc
Offset voltage, all packages except CSP	$V_{DACOFFSET}$	After calibration, single-ended	—	2	9	mV
		After calibration, differential	—	2	—	mV
Offset voltage, CSP devices	$V_{DACOFFSET}$	After calibration, single-ended	—	2	—	mV
		After calibration, differential	—	2	—	mV
Differential non-linearity	DNL_{DAC}		—	±1	—	LSB
Integral non-linearity	INL_{DAC}		—	±5	—	LSB
No missing codes	MC_{DAC}		—	12	—	bits
Load current	I_{LOAD_DC}		—	—	11	mA
VREF voltage	V_{REF}	1.25 V reference	1.2	1.25	1.3	V
		2.5 V reference	2.4	2.5	2.6	V
VREF voltage drift	V_{REF_VDRIFT}	1.25 V reference	-12.4	2.3	18.2	mV/V
		2.5 V reference, VDD > 2.5 V	-24.6	5.3	35.2	mV/V
VREF temperature drift	V_{REF_TDRIFT}	1.25 V reference	-132	242	677	µV/°C
		2.5 V reference	-231	507	1271	µV/°C
VREF current consumption	I_{VREF}	1.25 V reference	—	67	114	µA
		2.5 V reference	—	55	72	µA
ADC and DAC VREF matching	V_{REF_MATCH}	1.25 V reference	—	99.85	—	%
		2.5 V reference	—	100.01	—	%

Note:

1. Measured with a static input code and no loading on the output. Includes required contribution from the voltage reference.

4.13 Operational Amplifier (OPAMP)

Table 4.17. OPAMP

Parameter	Symbol	Test Condition	Min	Typ	Max	Unit
Active Current	I_{OPAMP}	(OPA2)BIASPROG=0xF,(OPA2)HALF-BIAS=0x0, Unity Gain	—	370	460	µA
		(OPA2)BIASPROG=0x7,(OPA2)HALF-BIAS=0x1, Unity Gain	—	95	135	µA
		(OPA2)BIASPROG=0x0,(OPA2)HALF-BIAS=0x1, Unity Gain	—	13	25	µA
		(OPA2)BIASPROG=0x4,(OPA2)HALF-BIAS=0x1, UnityGain	—	63	87	µA
		(OPA0)BIASPROG=0x0,(OPA0)HALF-BIAS=0x1, UnityGain	—	18	27	µA
		(OPA0)BIASPROG=0x4,(OPA0)HALF-BIAS=0x1, UnityGain	—	68	96	µA
		(OPA1)BIASPROG=0x0,(OPA1)HALF-BIAS=0x1, UnityGain	—	18	27	µA
		(OPA1)BIASPROG=0x4,(OPA1)HALF-BIAS=0x1, UnityGain	—	67	96	µA
Open Loop Gain	G_{OL}	(OPA2)BIASPROG=0xF,(OPA2)HALF-BIAS=0x0	—	101	—	dB
		(OPA2)BIASPROG=0x7,(OPA2)HALF-BIAS=0x1	—	98	—	dB
		(OPA2)BIASPROG=0x0,(OPA2)HALF-BIAS=0x1	—	91	—	dB

Parameter	Symbol	Test Condition	Min	Typ	Max	Unit
Gain Bandwidth Product	GBW_{OPAMP}	(OPA0)BIASPROG=0x0,(OPA0)HALF-BIAS=0x1, DC bias = 0.3 V	—	0.393[1]	—	MHz
		(OPA0)BIASPROG=0x0,(OPA0)HALF-BIAS=0x1, DC bias = 1 V	—	0.487[1]	—	MHz
		(OPA0)BIASPROG=0x0,(OPA0)HALF-BIAS=0x1, DC bias = 2 V	—	0.392[1]	—	MHz
		(OPA0)BIASPROG=0x0,(OPA0)HALF-BIAS=0x1, DC bias = 2.7 V	—	0.318[1]	—	MHz
		(OPA0)BIASPROG=0x4,(OPA0)HALF-BIAS=0x1, DC bias = 0.3 V	—	1.595[1]	—	MHz
		(OPA0)BIASPROG=0x4,(OPA0)HALF-BIAS=0x1, DC bias = 1 V	—	2.661[1]	—	MHz
		(OPA0)BIASPROG=0x4,(OPA0)HALF-BIAS=0x1, DC bias = 2 V	—	2.566[1]	—	MHz
		(OPA0)BIASPROG=0x4,(OPA0)HALF-BIAS=0x1, DC bias = 2.7 V	—	1.787[1]	—	MHz
		(OPA1)BIASPROG=0x0,(OPA1)HALF-BIAS=0x1, DC bias = 0.3 V	—	0.460[1]	—	MHz
		(OPA1)BIASPROG=0x0,(OPA1)HALF-BIAS=0x1, DC bias = 1 V	—	0.447[1]	—	MHz
		(OPA1)BIASPROG=0x0,(OPA1)HALF-BIAS=0x1, DC bias = 2 V	—	0.372[1]	—	MHz
		(OPA1)BIASPROG=0x0,(OPA1)HALF-BIAS=0x1, DC bias = 2.7 V	—	0.295[1]	—	MHz
		(OPA1)BIASPROG=0x4,(OPA1)HALF-BIAS=0x1, DC bias = 0.3 V	—	1.890[1]	—	MHz
		(OPA1)BIASPROG=0x4,(OPA1)HALF-BIAS=0x1, DC bias = 1 V	—	2.849[1]	—	MHz
		(OPA1)BIASPROG=0x4,(OPA1)HALF-BIAS=0x1, DC bias = 2 V	—	2.561[1]	—	MHz
		(OPA1)BIASPROG=0x4,(OPA1)HALF-BIAS=0x1, DC bias = 2.7 V	—	1.705[1]	—	MHz
		(OPA2)BIASPROG=0x0,(OPA2)HALF-BIAS=0x1, DC bias = 0.3 V	—	0.339[1]	—	MHz
		(OPA2)BIASPROG=0x0,(OPA2)HALF-BIAS=0x1, DC bias = 1 V	—	0.432[1]	—	MHz
		(OPA2)BIASPROG=0x0,(OPA2)HALF-BIAS=0x1, DC bias = 2 V	—	0.347[1]	—	MHz
		(OPA2)BIASPROG=0x0,(OPA2)HALF-BIAS=0x1, DC bias = 2.7 V	—	0.286[1]	—	MHz
		(OPA2)BIASPROG=0x4,(OPA2)HALF-BIAS=0x1, DC bias = 0.3 V	—	1.271[1]	—	MHz
		(OPA2)BIASPROG=0x4,(OPA2)HALF-BIAS=0x1, DC bias = 1 V	—	1.429[1]	—	MHz
		(OPA2)BIASPROG=0x4,(OPA2)HALF-BIAS=0x1, DC bias = 2 V	—	1.283[1]	—	MHz

Parameter	Symbol	Test Condition	Min	Typ	Max	Unit
Gain Bandwidth Product	GBW_{OPAMP}	(OPA2)BIASPROG=0x4,(OPA2)HALF-BIAS=0x1, DC bias = 2.7 V	—	1.136[1]	—	MHz
		(OPA2)BIASPROG=0xF,(OPA2)HALF-BIAS=0x0, DC bias = 1.5 V	—	6.1[2]	—	MHz
		(OPA2)BIASPROG=0x7,(OPA2)HALF-BIAS=0x1, DC bias = 1.5 V	—	1.8[2]	—	MHz
Phase Margin	PM_{OPAMP}	(OPA2)BIASPROG=0xF,(OPA2)HALF-BIAS=0x0, C_L=75 pF	—	64	—	°
		(OPA2)BIASPROG=0x7,(OPA2)HALF-BIAS=0x1, C_L=75 pF	—	58	—	°
		(OPA2)BIASPROG=0x0,(OPA2)HALF-BIAS=0x1, C_L=75 pF	—	58	—	°
Input Resistance	R_{INPUT}		—	100	—	MΩ
Load Resistance	R_{LOAD}	OPA0/1	200	—	—	Ω
		OPA/2	1000	—	—	Ω
DC Load Current	I_{LOAD_DC}		—	—	11	mA
Input Voltage	V_{INPUT}	OPAxHCMDIS=0	V_{SS}	—	V_{DD}	V
		OPAxHCMDIS=1	V_{SS}	—	V_{DD}-1.2	V
Output Voltage	V_{OUTPUT}		V_{SS}	—	V_{DD}	V
Input Offset Voltage, all packages except CSP	V_{OFFSET}	(OPA0) Unity Gain, $V_{SS}<V_{in}<V_{DD}$, OPAxHCMDIS=0	-13	0	11	mV
		(OPA1) Unity Gain, $V_{SS}<V_{in}<V_{DD}$, OPAxHCMDIS=0	-13	0.1	11	mV
		(OPA2) Unity Gain, $V_{SS}<V_{in}<V_{DD}$, OPAxHCMDIS=0	-13	0	11	mV
		(OPA2) Unity Gain, $V_{SS}<V_{in}<V_{DD}$-1.2,OPAxHCMDIS=1	—	1	—	mV
Input Offset Voltage, CSP devices	V_{OFFSET}	(OPA0) Unity Gain, $V_{SS}<V_{in}<V_{DD}$, OPAxHCMDIS=0	—	0	—	mV
		(OPA1) Unity Gain, $V_{SS}<V_{in}<V_{DD}$, OPAxHCMDIS=0	—	0.1	—	mV
		(OPA2) Unity Gain, $V_{SS}<V_{in}<V_{DD}$, OPAxHCMDIS=0	-13	0	11	mV
		(OPA2) Unity Gain, $V_{SS}<V_{in}<V_{DD}$-1.2,OPAxHCMDIS=1	—	1	—	mV
Input Offset Voltage Drift	V_{OFFSET_DRIFT}		—	—	0.02	mV/°C
Input bias current	$I_{OPAMPBIASIN}$	VSS < VIN < VDD	-40	—	40	nA
Input offset current	$I_{OPAMPOFFSETI}$	VSS < VIN < VDD	-40	—	40	nA

Parameter	Symbol	Test Condition	Min	Typ	Max	Unit
Slew Rate	SR_{OPAMP}	(OPA2)BIASPROG=0xF,(OPA2)HALF-BIAS=0x0, 70 pF load Rising (Simulated at 25 C and VDD=3 V)	—	3.2	—	V/µs
		(OPA2)BIASPROG=0x7,(OPA2)HALF-BIAS=0x1, 70 pF load, Rising (Simulated at 25 Cand VDD=3 V)	—	0.8	—	V/µs
		(OPA2)BIASPROG=0x0,(OPA2)HALF-BIAS=0x1, 70 pF load, Rising	—	178	—	V/µs
		(OPA2)BIASPROG=0x0,(OPA2)HALF-BIAS=0x1, 70 pF load, Falling	—	198	—	V/µs
		(OPA2)BIASPROG=0x4,(OPA2)HALF-BIAS=0x1, 70 pF load, Rising	—	969	—	V/µs
		(OPA2)BIASPROG=0x4,(OPA2)HALF-BIAS=0x1, 70 pF load, Falling	—	969	—	V/µs
		(OPA1)BIASPROG=0x0,(OPA1)HALF-BIAS=0x1, 70 pF load, Rising	—	166	—	V/µs
		(OPA1)BIASPROG=0x0,(OPA1)HALF-BIAS=0x1, 70 pF load, Falling	—	180	—	V/µs
		(OPA1)BIASPROG=0x4,(OPA1)HALF-BIAS=0x1, 70 pF load, Rising	—	918	—	V/µs
		(OPA1)BIASPROG=0x4,(OPA1)HALF-BIAS=0x1, 70 pF load, Falling	—	937	—	V/µs
		(OPA0)BIASPROG=0x0,(OPA0)HALF-BIAS=0x1, 70 pF load, Rising	—	173	—	V/µs
		(OPA0)BIASPROG=0x0,(OPA0)HALF-BIAS=0x1, 70 pF load, Falling	—	191	—	V/µs
		(OPA0)BIASPROG=0x4,(OPA0)HALF-BIAS=0x1, 70 pF load, Rising	—	935	—	V/µs
		(OPA0)BIASPROG=0x4,(OPA0)HALF-BIAS=0x1, 70 pF load, Falling	—	950	—	V/µs
Voltage Noise	N_{OPAMP}	V_{out}=1V, RESSEL=0, 0.1 Hz<f<10 kHz, OPAxHCMDIS=0	—	101	—	μV_{RMS}
		V_{out}=1V, RESSEL=0, 0.1 Hz<f<10 kHz, OPAxHCMDIS=1	—	141	—	μV_{RMS}
		Vout=1V, RESSEL=0, 0.1 Hz<f<1 MHz, OPAxHCMDIS=0	—	196	—	μV_{RMS}
		Vout=1V, RESSEL=0, 0.1 Hz<f<1 MHz, OPAxHCMDIS=1	—	229	—	μV_{RMS}
		RESSEL=7, 0.1 Hz<f<10 kHz, OPAxHCM-DIS=0	—	1230	—	μV_{RMS}
		RESSEL=7, 0.1 Hz<f<10 kHz, OPAxHCM-DIS=1	—	2130	—	μV_{RMS}
		RESSEL=7, 0.1 Hz<f<1 MHz, OPAxHCM-DIS=0	—	1630	—	μV_{RMS}
		RESSEL=7, 0.1 Hz<f<1 MHz, OPAxHCM-DIS=1	—	2590	—	μV_{RMS}

Parameter	Symbol	Test Condition	Min	Typ	Max	Unit

Note:

1. Measured with 70 pF load capacitance, 25 ºC, and 3 V, using a 100 mV p-p amplitude on the input signal.
2. Simulated with 70 pF load capacitance, 25 ºC, and 3 V, using a 1 mV p-p amplitude on the input signal.

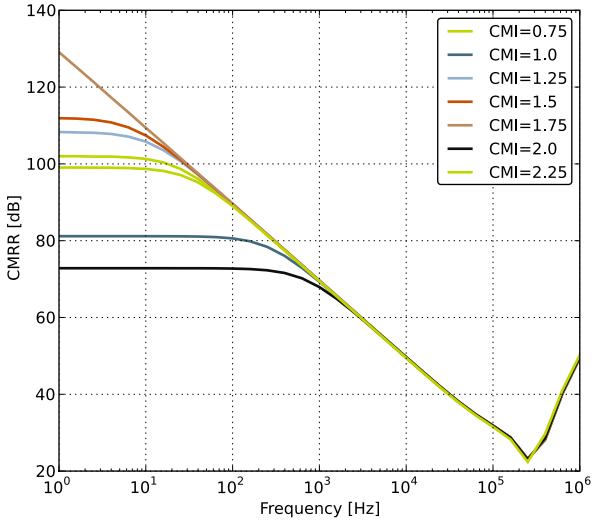

Figure 4.31. OPAMP Common Mode Rejection Ratio

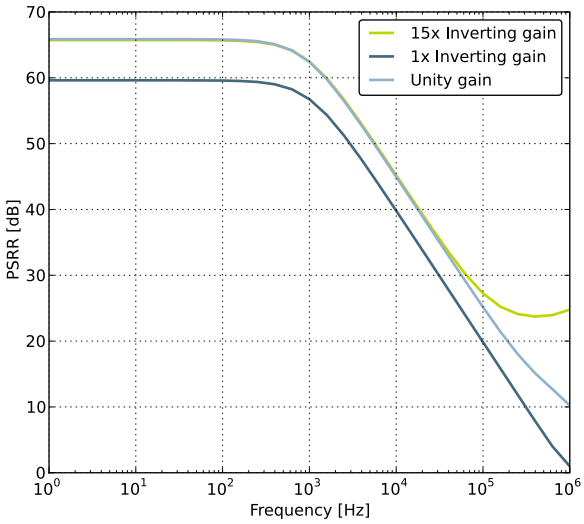

Figure 4.32. OPAMP Positive Power Supply Rejection Ratio

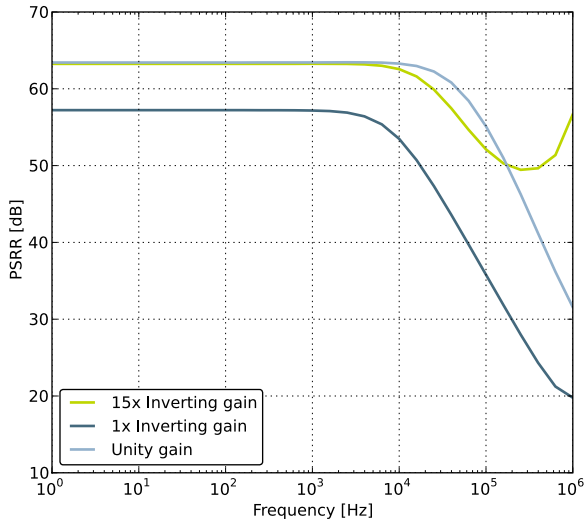

Figure 4.33. OPAMP Negative Power Supply Rejection Ratio

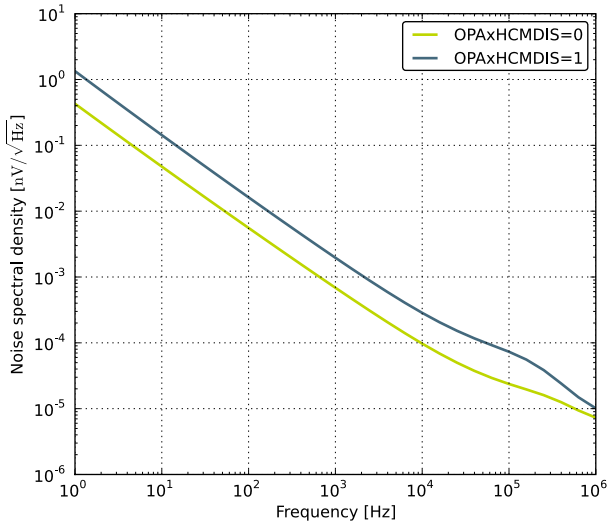

Figure 4.34. OPAMP Voltage Noise Spectral Density(Unity Gain) V_{out}=1V

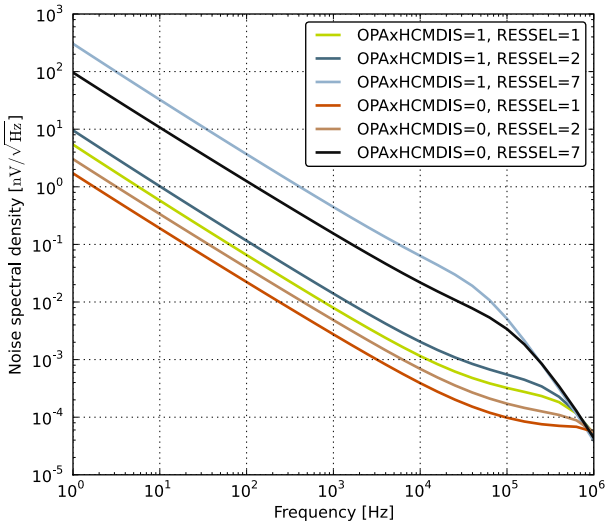

Figure 4.35. OPAMP Voltage Noise Spectral Density(Non-Unity Gain)

4.14 Analog Comparator (ACMP)

Table 4.18. ACMP

Parameter	Symbol	Test Condition	Min	Typ	Max	Unit
Input voltage range	V_{ACMPIN}		0	—	V_{DD}	V
Input bias current	$I_{ACMPBIASIN}$	VSS < VIN < VDD	-40	—	40	nA
Input offset current	$I_{ACMPOFFSETIN}$	VSS < VIN < VDD	-40	—	40	nA
ACMP Common Mode voltage range	V_{ACMPCM}		0	—	V_{DD}	V
Active current	I_{ACMP}	BIASPROG=0b0000, FULLBIAS=0 and HALFBIAS=1 in ACMPn_CTRL register	—	0.1[1]	0.4[1]	µA
		BIASPROG=0b1111, FULLBIAS= 0 and HALFBIAS=0 in ACMPn_CTRL register	—	2.87[1]	15[1]	µA
		BIASPROG=0b1111, FULLBIAS= 1 and HALFBIAS=0 in ACMPn_CTRL register	—	195[1]	520[1]	µA
		BIASPROG=0b0100, FULLBIAS=0, HALFBIAS=1 in ACMPn_CTRL register	—	0.8[1]	2.2[1]	µA
		BIASPROG=0b1111, FULLBIAS=0, HALFBIAS=1 in-ACMPn_CTRL register	—	2.7[1]	8.1[1]	µA
Current consumption of internal voltage reference	$I_{ACMPREF}$	Internal voltage reference off. Using external voltage reference	—	0	—	µA
		Internal voltage reference	—	5	—	µA

Parameter	Symbol	Test Condition	Min	Typ	Max	Unit
Negative response time	$t_{RESPONSE_N}$	BIASPROG=0b1111, FULLBIAS=0, HALFBIAS=1, Overdrive = 100 mV, LPREF=0, HYSTSEL=0	—	353	—	ns
		BIASPROG=0b1111, FULLBIAS=0, HALFBIAS=1, Overdrive = 100 mV, LPREF=0, HYSTSEL=1	—	547	—	ns
		BIASPROG=0b1111, FULLBIAS=0, HALFBIAS=1, Overdrive = 100 mV, LPREF=0, HYSTSEL=2	—	578	—	ns
		BIASPROG=0b1111, FULLBIAS=0, HALFBIAS=1, Overdrive = 100 mV, LPREF=0, HYSTSEL=3	—	627	—	ns
		BIASPROG=0b1111, FULLBIAS=0, HALFBIAS=1, Overdrive = 100 mV, LPREF=0, HYSTSEL=4	—	670	—	ns
		BIASPROG=0b1111, FULLBIAS=0, HALFBIAS=1, Overdrive = 100 mV, LPREF=0, HYSTSEL=5	—	741	—	ns
		BIASPROG=0b1111, FULLBIAS=0, HALFBIAS=1, Overdrive = 100 mV, LPREF=0, HYSTSEL=6	—	811	—	ns
		BIASPROG=0b1111, FULLBIAS=0, HALFBIAS=1, Overdrive = 100 mV, LPREF=0, HYSTSEL=7	—	926	—	ns

Parameter	Symbol	Test Condition	Min	Typ	Max	Unit
Negative response time	$t_{RESPONSE_N}$	BIASPROG=0b0100, FULLBIAS=0, HALFBIAS=1, Overdrive = 100 mV, LPREF=0, HYSTSEL=0	—	843	—	ns
		BIASPROG=0b0100, FULLBIAS=0, HALFBIAS=1, Overdrive = 100 mV, LPREF=0, HYSTSEL=1	—	1499	—	ns
		BIASPROG=0b0100, FULLBIAS=0, HALFBIAS=1, Overdrive = 100 mV, LPREF=0, HYSTSEL=2	—	1590	—	ns
		BIASPROG=0b0100, FULLBIAS=0, HALFBIAS=1, Overdrive = 100 mV, LPREF=0, HYSTSEL=3	—	1746	—	ns
		BIASPROG=0b0100, FULLBIAS=0, HALFBIAS=1, Overdrive = 100 mV, LPREF=0, HYSTSEL=4	—	1876	—	ns
		BIASPROG=0b0100, FULLBIAS=0, HALFBIAS=1, Overdrive = 100 mV, LPREF=0, HYSTSEL=5	—	2104	—	ns
		BIASPROG=0b0100, FULLBIAS=0, HALFBIAS=1, Overdrive = 100 mV, LPREF=0, HYSTSEL=6	—	2323	—	ns
		BIASPROG=0b0100, FULLBIAS=0, HALFBIAS=1, Overdrive = 100 mV, LPREF=0, HYSTSEL=7	—	2691	—	ns

Parameter	Symbol	Test Condition	Min	Typ	Max	Unit
Positive response time	$t_{RESPONSE_P}$	BIASPROG=0b1111, FULLBIAS=0, HALFBIAS=1, Overdrive = 100 mV, LPREF=0, HYSTSEL=0	—	451	—	ns
		BIASPROG=0b1111, FULLBIAS=0, HALFBIAS=1, Overdrive = 100 mV, LPREF=0, HYSTSEL=1	—	643	—	ns
		BIASPROG=0b1111, FULLBIAS=0, HALFBIAS=1, Overdrive = 100 mV, LPREF=0, HYSTSEL=2	—	679	—	ns
		BIASPROG=0b1111, FULLBIAS=0, HALFBIAS=1, Overdrive = 100 mV, LPREF=0, HYSTSEL=3	—	725	—	ns
		BIASPROG=0b1111, FULLBIAS=0, HALFBIAS=1, Overdrive = 100 mV, LPREF=0, HYSTSEL=4	—	761	—	ns
		BIASPROG=0b1111, FULLBIAS=0, HALFBIAS=1, Overdrive = 100 mV, LPREF=0, HYSTSEL=5	—	826	—	ns
		BIASPROG=0b1111, FULLBIAS=0, HALFBIAS=1, Overdrive = 100 mV, LPREF=0, HYSTSEL=6	—	909	—	ns
		BIASPROG=0b1111, FULLBIAS=0, HALFBIAS=1, Overdrive = 100 mV, LPREF=0, HYSTSEL=7	—	1021	—	ns

Parameter	Symbol	Test Condition	Min	Typ	Max	Unit
Positive response time	$t_{RESPONSE_P}$	BIASPROG=0b0100, FULLBIAS=0, HALFBIAS=1, Overdrive = 100 mV, LPREF=0, HYSTSEL=0	—	1014	—	ns
		BIASPROG=0b0100, FULLBIAS=0, HALFBIAS=1, Overdrive = 100 mV, LPREF=0, HYSTSEL=1	—	1671	—	ns
		BIASPROG=0b0100, FULLBIAS=0, HALFBIAS=1, Overdrive = 100 mV, LPREF=0, HYSTSEL=2	—	1786	—	ns
		BIASPROG=0b0100, FULLBIAS=0, HALFBIAS=1, Overdrive = 100 mV, LPREF=0, HYSTSEL=3	—	1933	—	ns
		BIASPROG=0b0100, FULLBIAS=0, HALFBIAS=1, Overdrive = 100 mV, LPREF=0, HYSTSEL=4	—	2046	—	ns
		BIASPROG=0b0100, FULLBIAS=0, HALFBIAS=1, Overdrive = 100 mV, LPREF=0, HYSTSEL=5	—	2262	—	ns
		BIASPROG=0b0100, FULLBIAS=0, HALFBIAS=1, Overdrive = 100 mV, LPREF=0, HYSTSEL=6	—	2531	—	ns
		BIASPROG=0b0100, FULLBIAS=0, HALFBIAS=1, Overdrive = 100 mV, LPREF=0, HYSTSEL=7	—	2907	—	ns
Offset voltage	$V_{ACMPOFFSET}$	BIASPROG= 0b1010, FULLBIAS=0 and HALFBIAS=0 in ACMPn_CTRL register	-12	0	12	mV
		BIASPROG= 0b0100, FULLBIAS=0, HALFBIAS=1, and LPREF=0 in ACMPn_CTRL register	-14.4	0.4	14.8	mV
		BIASPROG= 0b1111, FULLBIAS=0, HALFBIAS=1, and LPREF=0 in ACMPn_CTRL register	-13.3	0.3	13.2	mV

Parameter	Symbol	Test Condition	Min	Typ	Max	Unit
Negative hysteresis	$V_{ACMPHYST_N}$	BIASPROG=0b1111, FULL-BIAS=0, HALF-BIAS=1,LPREF=0, HYSTSEL=0	-0.3	1.2	4.0	mV
		BIASPROG=0b1111, FULL-BIAS=0, HALF-BIAS=1,LPREF=0, HYSTSEL=1	-18.0	-12.2	-4.0	mV
		BIASPROG=0b1111, FULL-BIAS=0, HALF-BIAS=1,LPREF=0, HYSTSEL=2	-25.0	-17.6	-9.0	mV
		BIASPROG=0b1111, FULL-BIAS=0, HALF-BIAS=1,LPREF=0, HYSTSEL=3	-33.0	-22.8	-13.0	mV
		BIASPROG=0b1111, FULL-BIAS=0, HALF-BIAS=1,LPREF=0, HYSTSEL=4	-40.0	-27.8	-16.0	mV
		BIASPROG=0b1111, FULL-BIAS=0, HALF-BIAS=1,LPREF=0, HYSTSEL=5	-46.0	-33.4	-21.0	mV
		BIASPROG=0b1111, FULL-BIAS=0, HALF-BIAS=1,LPREF=0, HYSTSEL=6	-56.0	-39.9	-25.0	mV
		BIASPROG=0b1111, FULL-BIAS=0, HALF-BIAS=1,LPREF=0, HYSTSEL=7	-65.0	-46.4	-29.0	mV
Positive hysteresis	$V_{ACMPHYST_P}$	BIASPROG=0b1111, FULL-BIAS=0, HALF-BIAS=1,LPREF=0, HYSTSEL=0	-0.3	1.2	4.0	mV
		BIASPROG=0b1111, FULL-BIAS=0, HALF-BIAS=1,LPREF=0, HYSTSEL=1	4.0	12.2	21.0	mV
		BIASPROG=0b1111, FULL-BIAS=0, HALF-BIAS=1,LPREF=0, HYSTSEL=2	9.0	17.1	25.0	mV
		BIASPROG=0b1111, FULL-BIAS=0, HALF-BIAS=1,LPREF=0, HYSTSEL=3	13.0	22.3	33.0	mV
		BIASPROG=0b1111, FULL-BIAS=0, HALF-BIAS=1,LPREF=0, HYSTSEL=4	17.0	28.2	42.0	mV
		BIASPROG=0b1111, FULL-BIAS=0, HALF-BIAS=1,LPREF=0, HYSTSEL=5	20.0	34.0	49.0	mV
		BIASPROG=0b1111, FULL-BIAS=0, HALF-BIAS=1,LPREF=0, HYSTSEL=6	25.0	39.8	58.0	mV
		BIASPROG=0b1111, FULL-BIAS=0, HALF-BIAS=1,LPREF=0, HYSTSEL=7	29.4	46.4	68.0	mV

Parameter	Symbol	Test Condition	Min	Typ	Max	Unit
Capacitive Sense Internal Resistance	R_{CSRES}	CSRESSEL=0b00 in ACMPn_INPUTSEL	—	39	—	kΩ
		CSRESSEL=0b01 in ACMPn_INPUTSEL	—	71	—	kΩ
		CSRESSEL=0b10 in ACMPn_INPUTSEL	—	104	—	kΩ
		CSRESSEL=0b11 in ACMPn_INPUTSEL	—	136	—	kΩ
Startup time	$t_{ACMPSTART}$		—	—	10	µs
VDD_SCALED input accuracy	$V_{VDDSCALED}$	VDD_SCALED=9,BIASPROG=0b1111, FULLBIAS=0, HALFBIAS=1, HYSTSEL=0, LPREF=0	—	-10.8	—	mV
		VDD_SCALED=9,BIASPROG=0b0000, FULLBIAS=0, HALFBIAS=1, HYSTSEL=0, LPREF=1	—	1.3	—	mV

Note:

1. Reference current not included.

The total ACMP current is the sum of the contributions from the ACMP and its internal voltage reference as given in in the following equation. $I_{ACMPREF}$ is zero if an external voltage reference is used.

$$I_{\mathrm{ACMPTOTAL}} = I_{\mathrm{ACMP}} + I_{\mathrm{ACMPREF}}$$

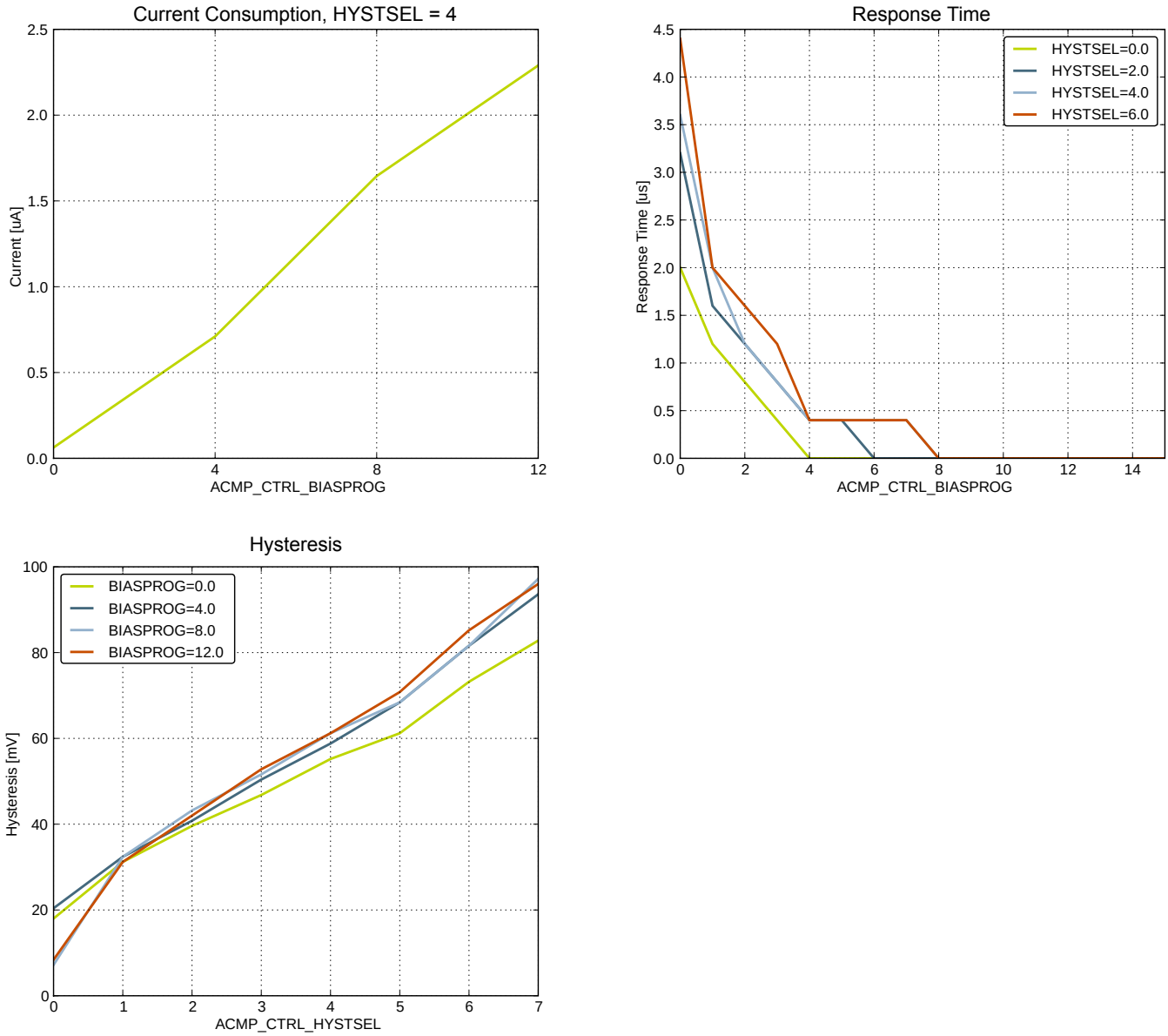

Figure 4.36. ACMP Characteristics, Vdd = 3 V, Temp = 25 °C, FULLBIAS = 0, HALFBIAS = 1

4.15 Voltage Comparator (VCMP)

Table 4.19. VCMP

Parameter	Symbol	Test Condition	Min	Typ	Max	Unit
Input voltage range	V_{VCMPIN}		—	V_{DD}	—	V
VCMP Common Mode voltage range	V_{VCMPCM}		—	V_{DD}	—	V
Active current	I_{VCMP}	BIASPROG=0b0000 and HALFBIAS=1 in VCMPn_CTRL register	—	0.3[1]	0.6[1]	µA
		BIASPROG=0b1111 and HALFBIAS=0 in VCMPn_CTRL register. LPREF=0.	—	22[1]	35[1]	µA
Startup time reference generator	$t_{VCMPREF}$	NORMAL	—	10	—	µs
Offset voltage	$V_{VCMPOFFSET}$	Single-ended	—	10	—	mV
		Differential	—	10	—	mV
Negative hysteresis	$V_{VCMPHYST_N}$	BIASPROG=0b0000, HALFBIAS=1, LPREF=1	-46.6	-15.6	11.4	mV
Positive hysteresis	$V_{VCMPHYST_P}$	BIASPROG=0b0000, HALFBIAS=1, LPREF=1	-7.5	23.4	46.6	mV
Hysteresis delta	$V_{VCMPHYST_DELTA}$	BIASPROG=0b0000, HALFBIAS=1, LPREF=1	4.2	35.2	70.0	mV
Startup time	$t_{VCMPSTART}$		—	—	10	µs
Negative response time	$t_{RESPONSE_N}$	BIASPROG=0b0000, HALFBIAS=1, LPREF=1, HYSTSEL=0	—	372.3	—	µs
Positive response time	$t_{RESPONSE_P}$	BIASPROG=0b0000, HALFBIAS=1, LPREF=1, HYSTSEL=0	—	865.7	—	µs

Note:
1. Includes required contribution from the voltage reference.

The V_{DD} trigger level can be configured by setting the TRIGLEVEL field of the VCMP_CTRL register in accordance with the following equation:

$$V_{\text{DD Trigger Level}} = 1.667V + 0.034 \times \text{TRIGLEVEL}$$

4.16 EBI

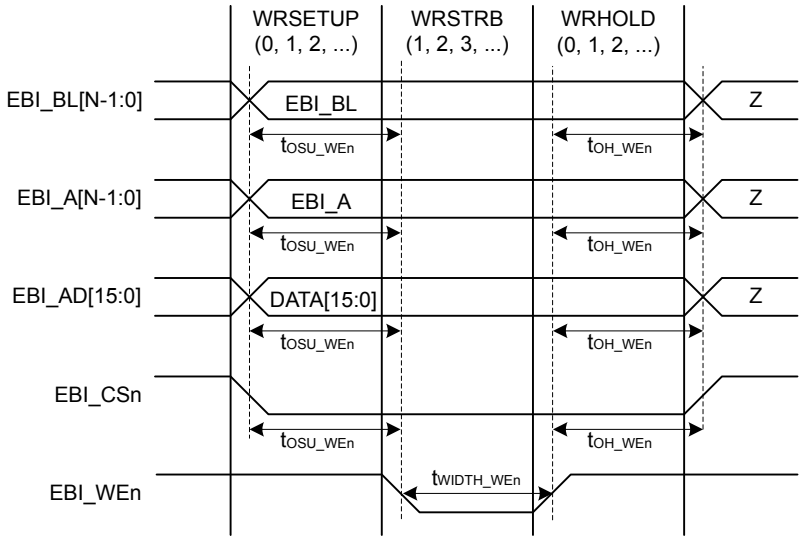

Figure 4.37. EBI Write Enable Timing

Table 4.20. EBI Write Enable Timing

Parameter	Symbol	Min	Typ	Max	Unit
Output hold time, from trailing EBI_WEn/EBI_NAND-WEn edge to EBI_AD, EBI_A, EBI_CSn, EBI_BLn invalid	t_{OH_WEn} [1 2 3 4]	-6.00 + (WRHOLD × $t_{HFCORECLK}$)	—	—	ns
Output setup time, from EBI_AD, EBI_A, EBI_CSn, EBI_BLn valid to leading EBI_WEn/EBI_NANDWEn edge	t_{OSU_WEn} [1 2 3 4 5]	-14.00 + (WRSETUP × $t_{HFCORECLK}$)	—	—	ns
EBI_WEn/EBI_NANDWEn pulse width	t_{WIDTH_WEn} [1 2 3 4 5]	-7.00 + ((WRSTRB + 1) × $t_{HFCORECLK}$)	—	—	ns

Note:

1. Applies for all addressing modes (figure only shows D16 addressing mode)
2. Applies for both EBI_WEn and EBI_NANWEn (figure only shows EBI_WEn)
3. Applies for all polarities (figure only shows active low signals)
4. Measurement done at 10% and 90% of V_{DD} (figure shows 50% of V_{DD})
5. The figure shows the timing for the case that the half strobe length functionality is not used, i.e. HALFWE=0. The leading edge of EBI_WEn can be moved to the right by setting HALFWE=1. This decreases the length of t_{WIDTH_WEn} and increases the length of t_{OSU_WEn} by 1/2 × $t_{HFCLKNODIV}$.

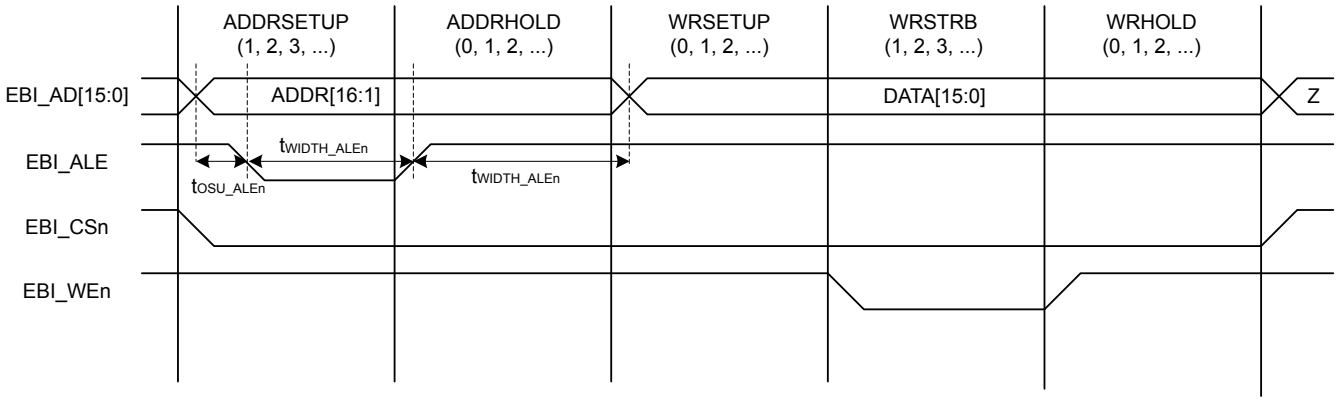

Figure 4.38. EBI Address Latch Enable Related Output Timing

Table 4.21. EBI Address Latch Enable Related Output Timing

Parameter	Symbol	Min	Typ	Max	Unit
Output hold time, from trailing EBI_ALE edge to EBI_AD invalid	t_{OH_ALEn} [1 2 3 4]	-6.00 + (WRHOLD[5] × $t_{HFCORECLK}$)	—	—	ns
Output setup time, from EBI_AD valid to leading EBI_ALE edge	t_{OSU_ALEn} [1 2 4]	-13.00 + (0 × $t_{HFCORECLK}$)	—	—	ns
EBI_ALEn pulse width	t_{WIDTH_ALEn} [1 2 3 4]	-7.00 + ((ADDRSETUP + 1) × $t_{HFCORECLK}$)	—	—	ns

Note:

1. Applies to addressing modes D8A24ALE and D16A16ALE (figure only shows D16A16ALE)
2. Applies for all polarities (figure only shows active low signals)
3. The figure shows the timing for the case that the half strobe length functionality is not used, i.e. HALFALE=0. The trailing edge of EBI_ALE can be moved to the left by setting HALFALE=1. This decreases the length of t_{WIDTH_ALEn} and increases the length of t_{OH_ALEn} by $t_{HFCORECLK}$ - 1/2 × $t_{HFCLKNODIV}$.
4. Measurement done at 10% and 90% of V_{DD} (figure shows 50% of V_{DD})
5. Figure only shows a write operation. For a multiplexed read operation the address hold time is controlled via the RDSETUP state instead of via the ADDRHOLD state.

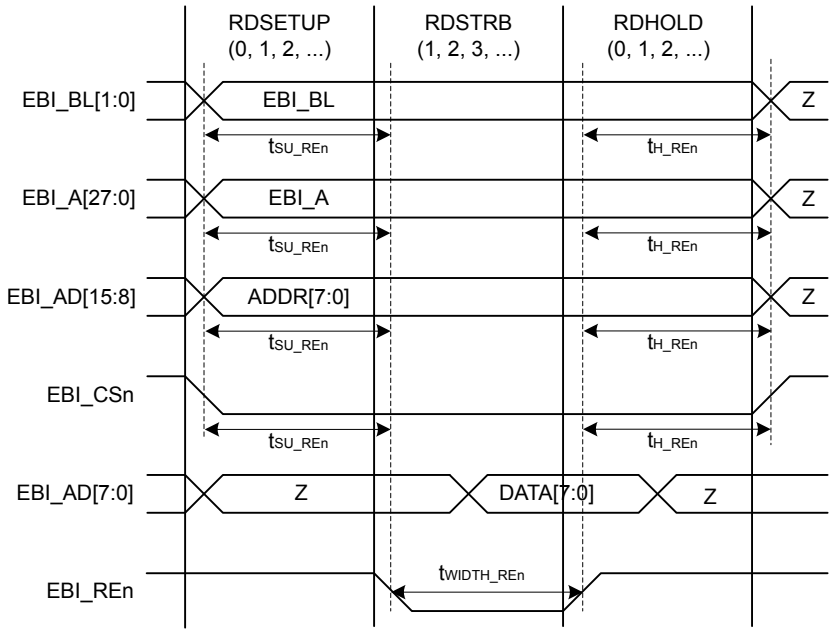

Figure 4.39. EBI Read Enable Related Output Timing

Table 4.22. EBI Read Enable Related Output Timing

Parameter	Symbol	Min	Typ	Max	Unit
Output hold time, from trailing EBI_REn/EBI_NANDREn edge to EBI_AD, EBI_A, EBI_CSn, EBI_BLn invalid	t_{OH_REn} [1 2 3 4]	-10.00 + (RDHOLD × $t_{HFCORECLK}$)	—	—	ns
Output setup time, from EBI_AD, EBI_A, EBI_CSn, EBI_BLn valid to leading EBI_REn/ EBI_NANDREn edge	t_{OSU_REn} [1 2 3 4 5]	-10.00 + (RDSETUP × $t_{HFCORECLK}$)	—	—	ns
EBI_REn pulse width	t_{WIDTH_REn} [1 2 3 4 5 6]	-9.00 + ((RDSTRB + 1) × $t_{HFCORECLK}$)	—	—	ns

Note:

1. Applies for all addressing modes (figure only shows D8A8. Output timing for EBI_AD only applies to multiplexed addressing modes D8A24ALE and D16A16ALE)
2. Applies for both EBI_REn and EBI_NANDREn (figure only shows EBI_REn)
3. Applies for all polarities (figure only shows active low signals)
4. Measurement done at 10% and 90% of V_{DD} (figure shows 50% of V_{DD})
5. The figure shows the timing for the case that the half strobe length functionality is not used, i.e. HALFRE=0. The leading edge of EBI_REn can be moved to the right by setting HALFRE=1. This decreases the length of t_{WIDTH_REn} and increases the length of t_{OSU_REn} by 1/2 × $t_{HFCLKNODIV}$.
6. When page mode is used, RDSTRB is replaced by RDPA for page hits.

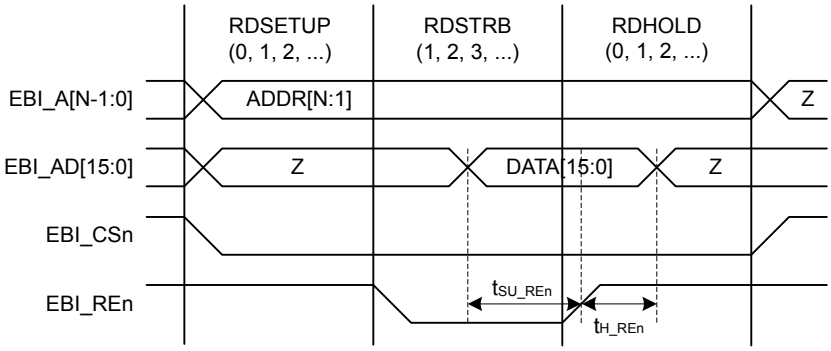

Figure 4.40. EBI Read Enable Related Timing Requirements

Table 4.23. EBI Read Enable Related Timing Requirements

Parameter	Symbol	Min	Typ	Max	Unit
Setup time, from EBI_AD valid to trailing EBI_REn edge	t_{SU_REn} [1 2 3 4]	37	—	—	ns
Hold time, from trailing EBI_REn edge to EBI_AD invalid	t_{H_REn} [1 2 3 4]	-1	—	—	ns

Note:

1. Applies for all addressing modes (figure only shows D16A8).
2. Applies for both EBI_REn and EBI_NANDREn (figure only shows EBI_REn)
3. Applies for all polarities (figure only shows active low signals)
4. Measurement done at 10% and 90% of V_{DD} (figure shows 50% of V_{DD})

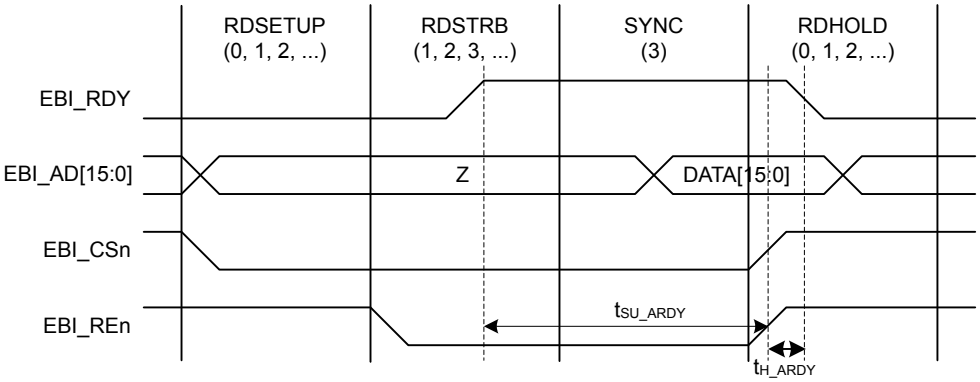

Figure 4.41. EBI Ready/Wait Related Timing Requirements

Table 4.24. EBI Ready/Wait Related Timing Requirements

Parameter	Symbol	Min	Typ	Max	Unit
Setup time, from EBI_ARDY valid to trailing EBI_REn, EBI_WEn edge	t_{SU_ARDY} [1 2 3 4]	37 + (3 × $t_{HFCORECLK}$)	—	—	ns
Hold time, from trailing EBI_REn, EBI_WEn edge to EBI_ARDY invalid	t_{H_ARDY} [1 2 3 4]	-1 + (3 × $t_{HFCORECLK}$)	—	—	ns

Note:

1. Applies for all addressing modes (figure only shows D16A8.)
2. Applies for EBI_REn, EBI_WEn (figure only shows EBI_REn)
3. Applies for all polarities (figure only shows active low signals)
4. Measurement done at 10% and 90% of V_{DD} (figure shows 50% of V_{DD})

4.17 LCD

Table 4.25. LCD

Parameter	Symbol	Test Condition	Min	Typ	Max	Unit
Frame rate	f_{LCDFR}		30	—	200	Hz
Number of segments supported	NUM_{SEG}		—	36×8	—	seg
LCD supply voltage range	V_{LCD}	Internal boost circuit enabled	2.0	—	3.8	V
Steady state current consumption.	I_{LCD}	Display disconnected, static mode, framerate 32 Hz, all segments on.	—	250	—	nA
		Display disconnected, quad-ruplex mode, framerate 32 Hz, all segments on, bias mode to ONETHIRD in LCD_DISPCTRL register.	—	550	—	nA
Steady state Current contribution of internal boost.	$I_{LCDBOOST}$	Internal voltage boost off	—	0	—	µA
		Internal voltage boost on, boosting from 2.2 V to 3.0 V.	—	8.4	—	µA
Boost Voltage	V_{BOOST}	VBLEV of LCD_DISPCTRL register to LEVEL0	—	3.02	—	V
		VBLEV of LCD_DISPCTRL register to LEVEL1	—	3.15	—	V
		VBLEV of LCD_DISPCTRL register to LEVEL2	—	3.28	—	V
		VBLEV of LCD_DISPCTRL register to LEVEL3	—	3.41	—	V
		VBLEV of LCD_DISPCTRL register to LEVEL4	—	3.54	—	V
		VBLEV of LCD_DISPCTRL register to LEVEL5	—	3.67	—	V
		VBLEV of LCD_DISPCTRL register to LEVEL6	—	3.73	—	V
		VBLEV of LCD_DISPCTRL register to LEVEL7	—	3.74	—	V

The total LCD current is given by the following equation. $I_{LCDBOOST}$ is zero if internal boost is off.

$$I_{\mathrm{LCDTOTAL}} = I_{\mathrm{LCD}} + I_{\mathrm{LCDBOOST}}$$

4.18 I2C

Table 4.26. I2C Standard-mode (Sm)

Parameter	Symbol	Min	Typ	Max	Unit
SCL clock frequency	f_{SCL}	0	—	100[1]	kHz
SCL clock low time	t_{LOW}	4.7	—	—	µs
SCL clock high time	t_{HIGH}	4.0	—	—	µs
SDA set-up time	$t_{SU,DAT}$	250	—	—	ns
SDA hold time	$t_{HD,DAT}$	8	—	3450[2,3]	ns
Repeated START condition set-up time	$t_{SU,STA}$	4.7	—	—	µs
(Repeated) START condition hold time	$t_{HD,STA}$	4.0	—	—	µs
STOP condition set-up time	$t_{SU,STO}$	4.0	—	—	µs
Bus free time between a STOP and a START condition	t_{BUF}	4.7	—	—	µs

Note:

1. For the minimum HFPERCLK frequency required in Standard-mode, see the I2C chapter in the EFM32WG Reference Manual.
2. The maximum SDA hold time ($t_{HD,DAT}$) needs to be met only when the device does not stretch the low time of SCL (t_{LOW}).
3. When transmitting data, this number is guaranteed only when I2Cn_CLKDIV < ((3450*10^{-9} [s] * $f_{HFPERCLK}$ [Hz]) - 4).

Table 4.27. I2C Fast-mode (Fm)

Parameter	Symbol	Min	Typ	Max	Unit
SCL clock frequency	f_{SCL}	0		400[1]	kHz
SCL clock low time	t_{LOW}	1.3			µs
SCL clock high time	t_{HIGH}	0.6			µs
SDA set-up time	$t_{SU,DAT}$	100			ns
SDA hold time	$t_{HD,DAT}$	8		900[2,3]	ns
Repeated START condition set-up time	$t_{SU,STA}$	0.6			µs
(Repeated) START condition hold time	$t_{HD,STA}$	0.6			µs
STOP condition set-up time	$t_{SU,STO}$	0.6			µs
Bus free time between a STOP and a START condition	t_{BUF}	1.3			µs

Note:

1. For the minimum HFPERCLK frequency required in Fast-mode, see the I2C chapter in the EFM32WG Reference Manual.
2. The maximum SDA hold time ($t_{HD,DAT}$) needs to be met only when the device does not stretch the low time of SCL (t_{LOW}).
3. When transmitting data, this number is guaranteed only when I2Cn_CLKDIV < ((900*10^{-9} [s] * $f_{HFPERCLK}$ [Hz]) - 4).

Table 4.28. I2C Fast-mode Plus (Fm+)

Parameter	Symbol	Min	Typ	Max	Unit
SCL clock frequency	f_{SCL}	0		1000[1]	kHz
SCL clock low time	t_{LOW}	0.5			µs
SCL clock high time	t_{HIGH}	0.26			µs
SDA set-up time	$t_{SU,DAT}$	50			ns
SDA hold time	$t_{HD,DAT}$	8			ns
Repeated START condition set-up time	$t_{SU,STA}$	0.26			µs
(Repeated) START condition hold time	$t_{HD,STA}$	0.26			µs
STOP condition set-up time	$t_{SU,STO}$	0.26			µs
Bus free time between a STOP and a START condition	t_{BUF}	0.5			µs

Note:

1. For the minimum HFPERCLK frequency required in Fast-mode Plus, see the I2C chapter in the EFM32WG Reference Manual.

4.19 USART SPI

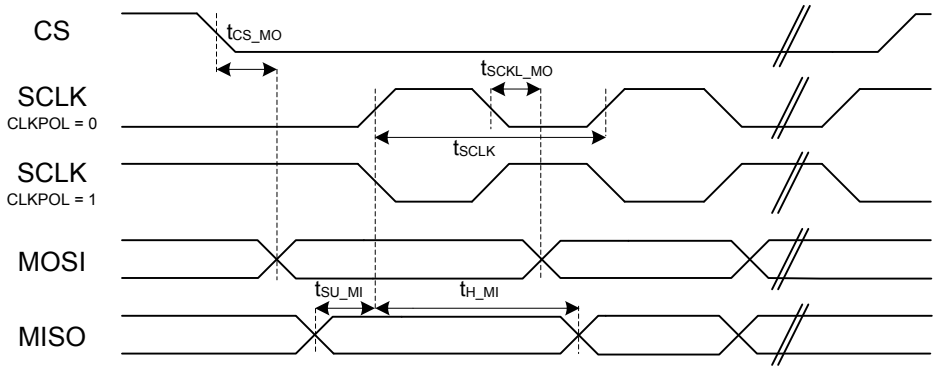

Figure 4.42. SPI Main Timing

Table 4.29. SPI Main Timing

Parameter	Symbol	Test Condition	Min	Typ	Max	Unit
SCLK period	t_{SCLK} [1] [2]		2 × $t_{HFPERCLK}$	—	—	ns
CS to MOSI	t_{CS_MO} [1] [2]		-2.00	—	2.00	ns
SCLK to MOSI	t_{SCLK_MO} [1] [2]		-1.00	—	3.00	ns
MISO setup time	t_{SU_MI} [1] [2]	IOVDD = 3.0 V	36.00	—	—	ns
MISO hold time	t_{H_MI} [1] [2]		-6.00	—	—	ns

Note:
1. Applies for both CLKPHA = 0 and CLKPHA = 1 (figure only shows CLKPHA = 0)
2. Measurement done at 10% and 90% of V_{DD} (figure shows 50% of V_{DD})

Table 4.30. SPI Main Timing with SSSEARLY and SMSDELAY

Parameter	Symbol	Test Condition	Min	Typ	Max	Unit
SCLK period	t_{SCLK} [1] [2]		2 × $t_{HFPERCLK}$	—	—	ns
CS to MOSI	t_{CS_MO} [1] [2]		-2.00	—	2.00	ns
SCLK to MOSI	t_{SCLK_MO} [1] [2]		-1.00	—	3.00	ns
MISO setup time	t_{SU_MI} [1] [2]	IOVDD = 3.0 V	-32.00	—	—	ns
MISO hold time	t_{H_MI} [1] [2]		63.00	—	—	ns

Note:
1. Applies for both CLKPHA = 0 and CLKPHA = 1 (figure only shows CLKPHA = 0)
2. Measurement done at 10% and 90% of V_{DD} (figure shows 50% of V_{DD})

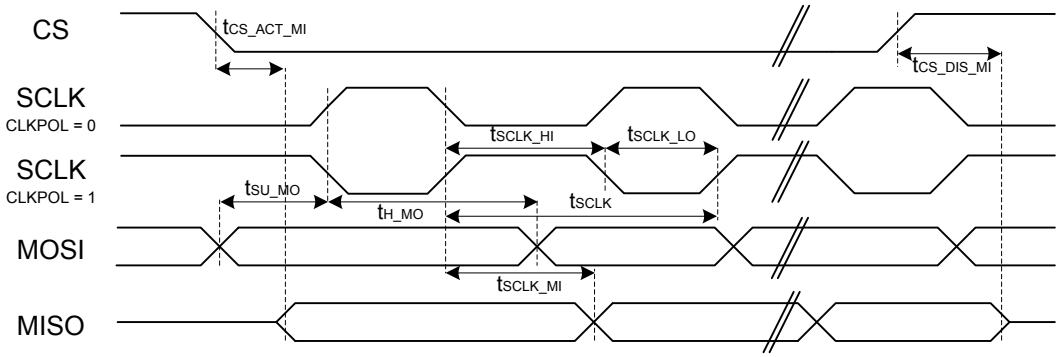

Figure 4.43. SPI Main Timing

Table 4.31. SPI Secondary Timing

Parameter	Symbol	Min	Typ	Max	Unit
SCKL period	t_{SCLK_sl} [1 2]	6 × $t_{HFPERCLK}$	—	—	ns
SCLK high period	t_{SCLK_hi} [1 2]	3 × $t_{HFPERCLK}$	—	—	ns
SCLK low period	t_{SCLK_lo} [1 2]	3 × $t_{HFPERCLK}$	—	—	ns
CS active to MISO	$t_{CS_ACT_MI}$ [1 2]	5.00	—	35.00	ns
CS disable to MISO high-impedance	$t_{CS_DIS_MI}$ [1 2]	5.00	—	35.00	ns
MOSI setup time	t_{SU_MO} [1 2]	5.00	—	—	ns
MOSI hold time	t_{H_MO} [1 2]	2 + 2 × $t_{HFPERCLK}$	—	—	ns
SCLK to MISO	t_{SCLK_MI} [1 2]	7 + $t_{HFPERCLK}$	—	42 + 2 × $t_{HFPERCLK}$	ns

Note:
1. Applies for both CLKPHA = 0 and CLKPHA = 1 (figure only shows CLKPHA = 0)
2. Measurement done at 10% and 90% of V_{DD} (figure shows 50% of V_{DD})

Table 4.32. SPI Secondary Timing with SSSEARLY and SMSDELAY

Parameter	Symbol	Min	Typ	Max	Unit
SCKL period	t_{SCLK_sl} [1 2]	6 × $t_{HFPERCLK}$	—	—	ns
SCLK high period	t_{SCLK_hi} [1 2]	3 × $t_{HFPERCLK}$	—	—	ns
SCLK low period	t_{SCLK_lo} [1 2]	3 × $t_{HFPERCLK}$	—	—	ns
CS active to MISO	$t_{CS_ACT_MI}$ [1 2]	5.00	—	35.00	ns
CS disable to MISO	$t_{CS_DIS_MI}$ [1 2]	5.00	—	35.00	ns
MOSI setup time	t_{SU_MO} [1 2]	5.00	—	—	ns
MOSI hold time	t_{H_MO} [1 2]	2 + 2 × $t_{HFPERCLK}$	—	—	ns

Parameter	Symbol	Min	Typ	Max	Unit
SCLK to MISO	t_{SCLK_MI} [1 2]	-264 + $t_{HFPERCLK}$	—	-234 + 2 × $t_{HFPERCLK}$	ns

Note:
1. Applies for both CLKPHA = 0 and CLKPHA = 1 (figure only shows CLKPHA = 0)
2. Measurement done at 10% and 90% of V_{DD} (figure shows 50% of V_{DD})

4.20 Digital Peripherals

Table 4.33. Digital Peripherals

Parameter	Symbol	Test Condition	Min	Typ	Max	Unit
USART current	I_{USART}	USART idle current, clock enabled	—	4.0	—	µA/MHz
UART current	I_{UART}	UART idle current, clock enabled	—	3.8	—	µA/MHz
LEUART current	I_{LEUART}	LEUART idle current, clock enabled	—	194.0	—	nA
I2C current	I_{I2C}	I2C idle current, clock enabled	—	7.6	—	µA/MHz
TIMER current	I_{TIMER}	TIMER_0 idle current, clock enabled	—	6.5	—	µA/MHz
LETIMER current	$I_{LETIMER}$	LETIMER idle current, clock enabled	—	85.8	—	nA
PCNT current	I_{PCNT}	PCNT idle current, clock enabled	—	91.4	—	nA
RTC current	I_{RTC}	RTC idle current, clock enabled	—	54.6	—	nA
LCD current	I_{LCD}	LCD idle current, clock enabled	—	72.7	—	nA
AES current	I_{AES}	AES idle current, clock enabled	—	1.8	—	µA/MHz
GPIO current	I_{GPIO}	GPIO idle current, clock enabled	—	3.4	—	µA/MHz
EBI current	I_{EBI}	EBI idle current, clock enabled	—	6.5	—	µA/MHz
PRS current	I_{PRS}	PRS idle current	—	3.9	—	µA/MHz
DMA current	I_{DMA}	Clock enable	—	10.9	—	µA/MHz
LE Peripheral Interface Clock current	I_{LFCLK}	Using LFXO, LFA clock tree	—	12.2	—	µA/MHz
		Using LFXO, LFB clock tree	—	4.3	—	µA/MHz

5. Pin Definitions

Note: Refer to the application note, AN0002.0: EFM32 and EZR32 Wireless MCU Series 0 Hardware Design Considerations for guidelines on designing Printed Circuit Boards (PCBs) for the EFM32WG.

5.1 EFM32WG230 (QFN64)

5.1.1 Pinout

The EFM32WG230 pinout is shown in the following figure and table. Alternate locations are denoted by "#" followed by the location number (Multiple locations on the same pin are split with "/"). Alternate locations can be configured in the LOCATION bitfield in the *_ROUTE register in the module in question.

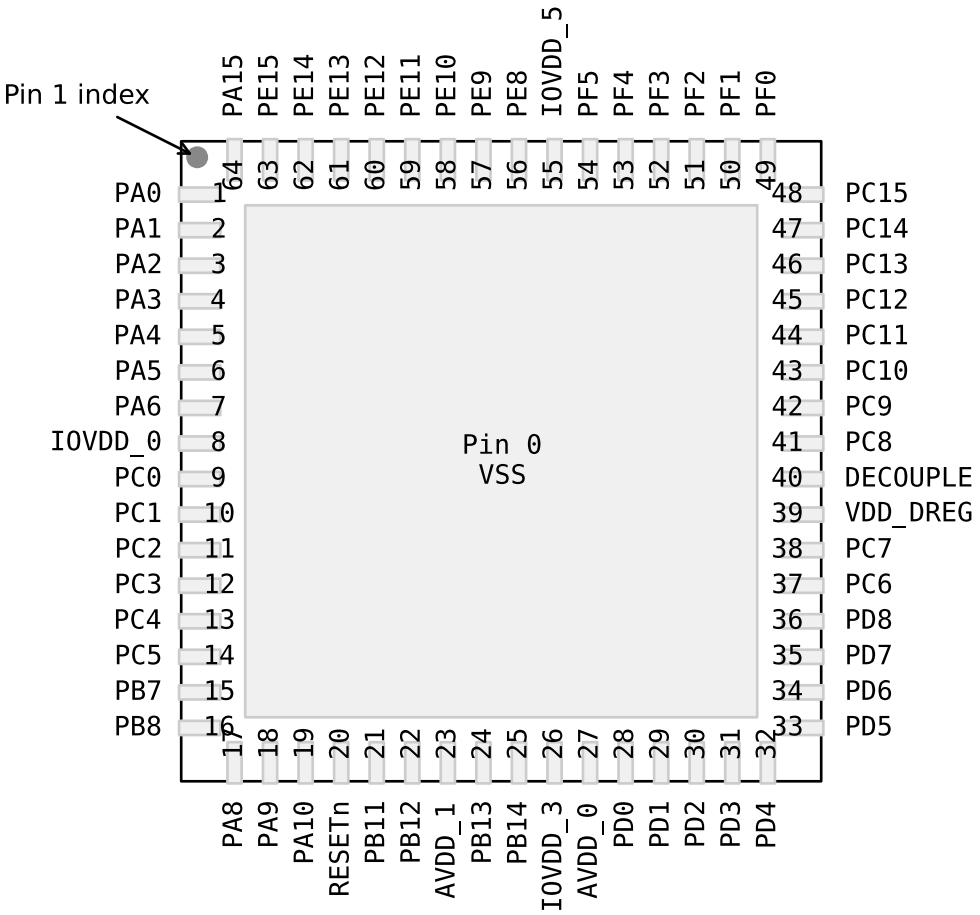

Figure 5.1. EFM32WG230 Pinout (top view, not to scale)

Table 5.1. Device Pinout

QFN64 Pin# and Name		Pin Alternate Functionality / Description			
Pin #	Pin Name	Analog	Timers	Communication	Other
0	VSS	Ground.			
1	PA0		TIM0_CC0 #0/1/4	LEU0_RX #4 I2C0_SDA #0	PRS_CH0 #0 GPIO_EM4WU0
2	PA1		TIM0_CC1 #0/1	I2C0_SCL #0	CMU_CLK1 #0 PRS_CH1 #0
3	PA2		TIM0_CC2 #0/1		CMU_CLK0 #0 ETM_TD0 #3
4	PA3		TIM0_CDTI0 #0		LES_ALTEX2 #0 ETM_TD1 #3
5	PA4		TIM0_CDTI1 #0		LES_ALTEX3 #0 ETM_TD2 #3
6	PA5		TIM0_CDTI2 #0	LEU1_TX #1	LES_ALTEX4 #0 ETM_TD3 #3
7	PA6			LEU1_RX #1	ETM_TCLK #3 GPIO_EM4WU1
8	IOVDD_0	Digital IO power supply 0.			
9	PC0	ACMP0_CH0 DAC0_OUT0ALT #0/ OPAMP_OUT0ALT	TIM0_CC1 #4 PCNT0_S0IN #2	US0_TX #5 US1_TX #0 I2C0_SDA #4	LES_CH0 #0 PRS_CH2 #0
10	PC1	ACMP0_CH1 DAC0_OUT0ALT #1/ OPAMP_OUT0ALT	TIM0_CC2 #4 PCNT0_S1IN #2	US0_RX #5 US1_RX #0 I2C0_SCL #4	LES_CH1 #0 PRS_CH3 #0
11	PC2	ACMP0_CH2 DAC0_OUT0ALT #2/ OPAMP_OUT0ALT	TIM0_CDTI0 #4	US2_TX #0	LES_CH2 #0
12	PC3	ACMP0_CH3 DAC0_OUT0ALT #3/ OPAMP_OUT0ALT	TIM0_CDTI1 #4	US2_RX #0	LES_CH3 #0
13	PC4	ACMP0_CH4 / DAC0_P0 / OPAMP_P0	TIM0_CDTI2 #4 LE-TIM0_OUT0 #3 PCNT1_S0IN #0	US2_CLK #0 I2C1_SDA #0	LES_CH4 #0
14	PC5	ACMP0_CH5 / DAC0_N0 / OPAMP_N0	LETIM0_OUT1 #3 PCNT1_S1IN #0	US2_CS #0 I2C1_SCL #0	LES_CH5 #0
15	PB7	LFXTAL_P	TIM1_CC0 #3	US0_TX #4 US1_CLK #0	
16	PB8	LFXTAL_N	TIM1_CC1 #3	US0_RX #4 US1_CS #0	
17	PA8		TIM2_CC0 #0		
18	PA9		TIM2_CC1 #0		
19	PA10		TIM2_CC2 #0		
20	RESETn	Reset input, active low. To apply an external reset source to this pin, it is required to only drive this pin low during reset, and let the internal pull-up ensure that reset is released.			
21	PB11	DAC0_OUT0 / OPAMP_OUT0	TIM1_CC2 #3 LE-TIM0_OUT0 #1	I2C1_SDA #1	

QFN64 Pin# and Name		Pin Alternate Functionality / Description			
Pin #	Pin Name	Analog	Timers	Communication	Other
22	PB12	DAC0_OUT1 / OPAMP_OUT1	LETIM0_OUT1 #1	I2C1_SCL #1	
23	AVDD_1	Analog power supply 1.			
24	PB13	HFXTAL_P		US0_CLK #4/5 LEU0_TX #1	
25	PB14	HFXTAL_N		US0_CS #4/5 LEU0_RX #1	
26	IOVDD_3	Digital IO power supply 3.			
27	AVDD_0	Analog power supply 0.			
28	PD0	ADC0_CH0 DAC0_OUT0ALT #4/ OPAMP_OUT0ALT OPAMP_OUT2 #1	PCNT2_S0IN #0	US1_TX #1	
29	PD1	ADC0_CH1 DAC0_OUT1ALT #4/ OPAMP_OUT1ALT	TIM0_CC0 #3 PCNT2_S1IN #0	US1_RX #1	DBG_SWO #2
30	PD2	ADC0_CH2	TIM0_CC1 #3	US1_CLK #1	DBG_SWO #3
31	PD3	ADC0_CH3 OPAMP_N2	TIM0_CC2 #3	US1_CS #1	ETM_TD1 #0/2
32	PD4	ADC0_CH4 OPAMP_P2		LEU0_TX #0	ETM_TD2 #0/2
33	PD5	ADC0_CH5 OPAMP_OUT2 #0		LEU0_RX #0	ETM_TD3 #0/2
34	PD6	ADC0_CH6 / DAC0_P1 / OPAMP_P1	TIM1_CC0 #4 LE-TIM0_OUT0 #0 PCNT0_S0IN #3	US1_RX #2 I2C0_SDA #1	LES_ALTEX0 #0 ACMP0_O #2 ETM_TD0 #0
35	PD7	ADC0_CH7 / DAC0_N1 / OPAMP_N1	TIM1_CC1 #4 LE-TIM0_OUT1 #0 PCNT0_S1IN #3	US1_TX #2 I2C0_SCL #1	CMU_CLK0 #2 LES_ALTEX1 #0 ACMP1_O #2 ETM_TCLK #0
36	PD8	BU_VIN			CMU_CLK1 #1
37	PC6	ACMP0_CH6		LEU1_TX #0 I2C0_SDA #2	LES_CH6 #0 ETM_TCLK #2
38	PC7	ACMP0_CH7		LEU1_RX #0 I2C0_SCL #2	LES_CH7 #0 ETM_TD0 #2
39	VDD_DREG	Power supply for on-chip voltage regulator.			
40	DECOUPLE	Decouple output for on-chip voltage regulator. An external capacitance of size $C_{DECOUPLE}$ is required at this pin.			
41	PC8	ACMP1_CH0	TIM2_CC0 #2	US0_CS #2	LES_CH8 #0
42	PC9	ACMP1_CH1	TIM2_CC1 #2	US0_CLK #2	LES_CH9 #0 GPIO_EM4WU2
43	PC10	ACMP1_CH2	TIM2_CC2 #2	US0_RX #2	LES_CH10 #0
44	PC11	ACMP1_CH3		US0_TX #2	LES_CH11 #0
45	PC12	ACMP1_CH4 DAC0_OUT1ALT #0/ OPAMP_OUT1ALT			CMU_CLK0 #1 LES_CH12 #0

QFN64 Pin# and Name		Pin Alternate Functionality / Description			
Pin #	Pin Name	Analog	Timers	Communication	Other
46	PC13	ACMP1_CH5 DAC0_OUT1ALT #1/ OPAMP_OUT1ALT	TIM0_CDTI0 #1/3 TIM1_CC0 #0 TIM1_CC2 #4 PCNT0_S0IN #0		LES_CH13 #0
47	PC14	ACMP1_CH6 DAC0_OUT1ALT #2/ OPAMP_OUT1ALT	TIM0_CDTI1 #1/3 TIM1_CC1 #0 PCNT0_S1IN #0	US0_CS #3	LES_CH14 #0
48	PC15	ACMP1_CH7 DAC0_OUT1ALT #3/ OPAMP_OUT1ALT	TIM0_CDTI2 #1/3 TIM1_CC2 #0	US0_CLK #3	LES_CH15 #0 DBG_SWO #1
49	PF0		TIM0_CC0 #5 LE-TIM0_OUT0 #2	US1_CLK #2 LEU0_TX #3 I2C0_SDA #5	DBG_SWCLK #0/1/2/3
50	PF1		TIM0_CC1 #5 LE-TIM0_OUT1 #2	US1_CS #2 LEU0_RX #3 I2C0_SCL #5	DBG_SWDIO #0/1/2/3 GPIO_EM4WU3
51	PF2		TIM0_CC2 #5	LEU0_TX #4	ACMP1_O #0 DBG_SWO #0 GPIO_EM4WU4
52	PF3		TIM0_CDTI0 #2/5		PRS_CH0 #1 ETM_TD3 #1
53	PF4		TIM0_CDTI1 #2/5		PRS_CH1 #1
54	PF5		TIM0_CDTI2 #2/5		PRS_CH2 #1
55	IOVDD_5	Digital IO power supply 5.			
56	PE8		PCNT2_S0IN #1		PRS_CH3 #1
57	PE9		PCNT2_S1IN #1		
58	PE10		TIM1_CC0 #1	US0_TX #0	BOOT_TX
59	PE11		TIM1_CC1 #1	US0_RX #0	LES_ALTEX5 #0 BOOT_RX
60	PE12		TIM1_CC2 #1	US0_RX #3 US0_CLK #0 I2C0_SDA #6	CMU_CLK1 #2 LES_ALTEX6 #0
61	PE13			US0_TX #3 US0_CS #0 I2C0_SCL #6	LES_ALTEX7 #0 ACMP0_O #0 GPIO_EM4WU5
62	PE14		TIM3_CC0 #0	LEU0_TX #2	
63	PE15		TIM3_CC1 #0	LEU0_RX #2	
64	PA15		TIM3_CC2 #0		

5.1.2 Alternate Functionality Pinout

A wide selection of alternate functionality is available for multiplexing to various pins. This is shown in the following table. The table shows the name of the alternate functionality in the first column, followed by columns showing the possible LOCATION bitfield settings.

Note: Some functionality, such as analog interfaces, do not have alternate settings or a LOCATION bitfield. In these cases, the pinout is shown in the column corresponding to LOCATION 0.

Table 5.2. Alternate Functionality Overview

Alternate	LOCATION							
Functionality	0	1	2	3	4	5	6	Description
ACMP0_CH0	PC0							Analog comparator ACMP0, channel 0.
ACMP0_CH1	PC1							Analog comparator ACMP0, channel 1.
ACMP0_CH2	PC2							Analog comparator ACMP0, channel 2.
ACMP0_CH3	PC3							Analog comparator ACMP0, channel 3.
ACMP0_CH4	PC4							Analog comparator ACMP0, channel 4.
ACMP0_CH5	PC5							Analog comparator ACMP0, channel 5.
ACMP0_CH6	PC6							Analog comparator ACMP0, channel 6.
ACMP0_CH7	PC7							Analog comparator ACMP0, channel 7.
ACMP0_O	PE13		PD6					Analog comparator ACMP0, digital output.
ACMP1_CH0	PC8							Analog comparator ACMP1, channel 0.
ACMP1_CH1	PC9							Analog comparator ACMP1, channel 1.
ACMP1_CH2	PC10							Analog comparator ACMP1, channel 2.
ACMP1_CH3	PC11							Analog comparator ACMP1, channel 3.
ACMP1_CH4	PC12							Analog comparator ACMP1, channel 4.
ACMP1_CH5	PC13							Analog comparator ACMP1, channel 5.
ACMP1_CH6	PC14							Analog comparator ACMP1, channel 6.
ACMP1_CH7	PC15							Analog comparator ACMP1, channel 7.
ACMP1_O	PF2		PD7					Analog comparator ACMP1, digital output.
ADC0_CH0	PD0							Analog to digital converter ADC0, input channel number 0.
ADC0_CH1	PD1							Analog to digital converter ADC0, input channel number 1.
ADC0_CH2	PD2							Analog to digital converter ADC0, input channel number 2.
ADC0_CH3	PD3							Analog to digital converter ADC0, input channel number 3.
ADC0_CH4	PD4							Analog to digital converter ADC0, input channel number 4.
ADC0_CH5	PD5							Analog to digital converter ADC0, input channel number 5.
ADC0_CH6	PD6							Analog to digital converter ADC0, input channel number 6.

Alternate	LOCATION							
Functionality	0	1	2	3	4	5	6	Description
ADC0_CH7	PD7							Analog to digital converter ADC0, input channel number 7.
BOOT_RX	PE11							Bootloader RX.
BOOT_TX	PE10							Bootloader TX.
BU_VIN	PD8							Battery input for Backup Power Domain
CMU_CLK0	PA2	PC12	PD7					Clock Management Unit, clock output number 0.
CMU_CLK1	PA1	PD8	PE12					Clock Management Unit, clock output number 1.
DAC0_OUT0 / OPAMP_OUT0	PB11							Digital to Analog Converter DAC0_OUT0 /OPAMP output channel number 0.
DAC0_OUT0ALT / OPAMP_OUT0ALT	PC0	PC1	PC2	PC3	PD0			Digital to Analog Converter DAC0_OUT0ALT / OPAMP alternative output for channel 0.
DAC0_OUT1 / OPAMP_OUT1	PB12							Digital to Analog Converter DAC0_OUT1 / OPAMP output channel number 1.
DAC0_OUT1ALT / OPAMP_OUT1ALT	PC12	PC13	PC14	PC15	PD1			Digital to Analog Converter DAC0_OUT1ALT / OPAMP alternative output for channel 1.
DBG_SWCLK	PF0	PF0	PF0	PF0				Debug-interface Serial Wire clock input. Note that this function is enabled to pin out of reset, and has a built-in pull down.
DBG_SWDIO	PF1	PF1	PF1	PF1				Debug-interface Serial Wire data input / output. Note that this function is enabled to pin out of reset, and has a built-in pull up.
DBG_SWO	PF2	PC15	PD1	PD2				Debug-interface Serial Wire viewer Output. Note that this function is not enabled after reset, and must be enabled by software to be used.
ETM_TCLK	PD7		PC6	PA6				Embedded Trace Module ETM clock .
ETM_TD0	PD6		PC7	PA2				Embedded Trace Module ETM data 0.
ETM_TD1	PD3		PD3	PA3				Embedded Trace Module ETM data 1.
ETM_TD2	PD4		PD4	PA4				Embedded Trace Module ETM data 2.
ETM_TD3	PD5	PF3	PD5	PA5				Embedded Trace Module ETM data 3.
GPIO_EM4WU0	PA0							Pin can be used to wake the system up from EM4
GPIO_EM4WU1	PA6							Pin can be used to wake the system up from EM4
GPIO_EM4WU2	PC9							Pin can be used to wake the system up from EM4
GPIO_EM4WU3	PF1							Pin can be used to wake the system up from EM4
GPIO_EM4WU4	PF2							Pin can be used to wake the system up from EM4
GPIO_EM4WU5	PE13							Pin can be used to wake the system up from EM4
HFXTAL_N	PB14							High Frequency Crystal negative pin. Also used as external optional clock input pin.
HFXTAL_P	PB13							High Frequency Crystal positive pin.

Alternate	LOCATION							
Functionality	0	1	2	3	4	5	6	Description
I2C0_SCL	PA1	PD7	PC7		PC1	PF1	PE13	I2C0 Serial Clock Line input / output.
I2C0_SDA	PA0	PD6	PC6		PC0	PF0	PE12	I2C0 Serial Data input / output.
I2C1_SCL	PC5	PB12						I2C1 Serial Clock Line input / output.
I2C1_SDA	PC4	PB11						I2C1 Serial Data input / output.
LES_ALTEX0	PD6							LESENSE alternate exite output 0.
LES_ALTEX1	PD7							LESENSE alternate exite output 1.
LES_ALTEX2	PA3							LESENSE alternate exite output 2.
LES_ALTEX3	PA4							LESENSE alternate exite output 3.
LES_ALTEX4	PA5							LESENSE alternate exite output 4.
LES_ALTEX5	PE11							LESENSE alternate exite output 5.
LES_ALTEX6	PE12							LESENSE alternate exite output 6.
LES_ALTEX7	PE13							LESENSE alternate exite output 7.
LES_CH0	PC0							LESENSE channel 0.
LES_CH1	PC1							LESENSE channel 1.
LES_CH2	PC2							LESENSE channel 2.
LES_CH3	PC3							LESENSE channel 3.
LES_CH4	PC4							LESENSE channel 4.
LES_CH5	PC5							LESENSE channel 5.
LES_CH6	PC6							LESENSE channel 6.
LES_CH7	PC7							LESENSE channel 7.
LES_CH8	PC8							LESENSE channel 8.
LES_CH9	PC9							LESENSE channel 9.
LES_CH10	PC10							LESENSE channel 10.
LES_CH11	PC11							LESENSE channel 11.
LES_CH12	PC12							LESENSE channel 12.
LES_CH13	PC13							LESENSE channel 13.
LES_CH14	PC14							LESENSE channel 14.
LES_CH15	PC15							LESENSE channel 15.
LETIM0_OUT0	PD6	PB11	PF0	PC4				Low Energy Timer LETIM0, output channel 0.
LETIM0_OUT1	PD7	PB12	PF1	PC5				Low Energy Timer LETIM0, output channel 1.
LEU0_RX	PD5	PB14	PE15	PF1	PA0			LEUART0 Receive input.
LEU0_TX	PD4	PB13	PE14	PF0	PF2			LEUART0 Transmit output. Also used as receive input in half duplex communication.
LEU1_RX	PC7	PA6						LEUART1 Receive input.
LEU1_TX	PC6	PA5						LEUART1 Transmit output. Also used as receive input in half duplex communication.

Alternate	LOCATION							
Functionality	0	1	2	3	4	5	6	Description
LFXTAL_N	PB8							Low Frequency Crystal (typically 32.768 kHz) negative pin. Also used as an optional external clock input pin.
LFXTAL_P	PB7							Low Frequency Crystal (typically 32.768 kHz) positive pin.
OPAMP_N0 / DAC0_N0	PC5							Operational Amplifier 0 external negative input.
OPAMP_N1 / DAC0_N1	PD7							Operational Amplifier 1 external negative input.
OPAMP_N2	PD3							Operational Amplifier 2 external negative input.
OPAMP_OUT2	PD5	PD0						Operational Amplifier 2 output.
OPAMP_P0 / DAC0_P0	PC4							Operational Amplifier 0 external positive input.
OPAMP_P1 / DAC0_P1	PD6							Operational Amplifier 1 external positive input.
OPAMP_P2	PD4							Operational Amplifier 2 external positive input.
PCNT0_S0IN	PC13		PC0	PD6				Pulse Counter PCNT0 input number 0.
PCNT0_S1IN	PC14		PC1	PD7				Pulse Counter PCNT0 input number 1.
PCNT1_S0IN	PC4							Pulse Counter PCNT1 input number 0.
PCNT1_S1IN	PC5							Pulse Counter PCNT1 input number 1.
PCNT2_S0IN	PD0	PE8						Pulse Counter PCNT2 input number 0.
PCNT2_S1IN	PD1	PE9						Pulse Counter PCNT2 input number 1.
PRS_CH0	PA0	PF3						Peripheral Reflex System PRS, channel 0.
PRS_CH1	PA1	PF4						Peripheral Reflex System PRS, channel 1.
PRS_CH2	PC0	PF5						Peripheral Reflex System PRS, channel 2.
PRS_CH3	PC1	PE8						Peripheral Reflex System PRS, channel 3.
TIM0_CC0	PA0	PA0		PD1	PA0	PF0		Timer 0 Capture Compare input / output channel 0.
TIM0_CC1	PA1	PA1		PD2	PC0	PF1		Timer 0 Capture Compare input / output channel 1.
TIM0_CC2	PA2	PA2		PD3	PC1	PF2		Timer 0 Capture Compare input / output channel 2.
TIM0_CDTI0	PA3	PC13	PF3	PC13	PC2	PF3		Timer 0 Complimentary Dead Time Insertion channel 0.
TIM0_CDTI1	PA4	PC14	PF4	PC14	PC3	PF4		Timer 0 Complimentary Dead Time Insertion channel 1.
TIM0_CDTI2	PA5	PC15	PF5	PC15	PC4	PF5		Timer 0 Complimentary Dead Time Insertion channel 2.
TIM1_CC0	PC13	PE10		PB7	PD6			Timer 1 Capture Compare input / output channel 0.
TIM1_CC1	PC14	PE11		PB8	PD7			Timer 1 Capture Compare input / output channel 1.
TIM1_CC2	PC15	PE12		PB11	PC13			Timer 1 Capture Compare input / output channel 2.
TIM2_CC0	PA8		PC8					Timer 2 Capture Compare input / output channel 0.
TIM2_CC1	PA9		PC9					Timer 2 Capture Compare input / output channel 1.

Alternate	LOCATION							
Functionality	0	1	2	3	4	5	6	Description
TIM2_CC2	PA10		PC10					Timer 2 Capture Compare input / output channel 2.
TIM3_CC0	PE14							Timer 3 Capture Compare input / output channel 0.
TIM3_CC1	PE15							Timer 3 Capture Compare input / output channel 1.
TIM3_CC2	PA15							Timer 3 Capture Compare input / output channel 2.
US0_CLK	PE12		PC9	PC15	PB13	PB13		USART0 clock input / output.
US0_CS	PE13		PC8	PC14	PB14	PB14		USART0 chip select input / output.
US0_RX	PE11		PC10	PE12	PB8	PC1		USART0 Asynchronous Receive. USART0 Synchronous mode Main Input / Secondary Output (MISO).
US0_TX	PE10		PC11	PE13	PB7	PC0		USART0 Asynchronous Transmit.Also used as receive input in half duplex communication. USART0 Synchronous mode Main Output / Secondary Input (MOSI).
US1_CLK	PB7	PD2	PF0					USART1 clock input / output.
US1_CS	PB8	PD3	PF1					USART1 chip select input / output.
US1_RX	PC1	PD1	PD6					USART1 Asynchronous Receive. USART1 Synchronous mode Main Input / Secondary Output (MISO).
US1_TX	PC0	PD0	PD7					USART1 Asynchronous Transmit.Also used as receive input in half duplex communication. USART1 Synchronous mode Main Output / Secondary Input (MOSI).
US2_CLK	PC4							USART2 clock input / output.
US2_CS	PC5							USART2 chip select input / output.
US2_RX	PC3							USART2 Asynchronous Receive. USART2 Synchronous mode Main Input / Secondary Output (MISO).
US2_TX	PC2							USART2 Asynchronous Transmit.Also used as receive input in half duplex communication. USART2 Synchronous mode Main Output / Secondary Input (MOSI).

5.1.3 GPIO Pinout Overview

The specific GPIO pins available in EFM32WG230 are shown in the following table. Each GPIO port is organized as 16-bit ports indicated by letters A through F, and the individual pin on this port is indicated by a number from 15 down to 0.

Table 5.3. GPIO Pinout

Port	Pin 15	Pin 14	Pin 13	Pin 12	Pin 11	Pin 10	Pin 9	Pin 8	Pin 7	Pin 6	Pin 5	Pin 4	Pin 3	Pin 2	Pin 1	Pin 0
Port A	PA15	—	—	—	—	PA10	PA9	PA8	—	PA6	PA5	PA4	PA3	PA2	PA1	PA0
Port B	—	PB14	PB13	PA12	PB11	—	—	PB8	PB7	—	—	—	—	—	—	—
Port C	PC15	PC14	PC13	PC12	PC11	PC10	PC9	PC8	PC7	PC6	PC5	PC4	PC3	PC2	PC1	PC0
Port D	—	—	—	—	—	—	—	PD8	PD7	PD6	PD5	PD4	PD3	PD2	PD1	PD0
Port E	PE15	PE14	PE13	PE12	PE11	PE10	PE9	PE8	—	—	—	—	—	—	—	—
Port F	—	—	—	—	—	—	—	—	—	—	PF5	PF4	PF3	PF2	PF1	PF0

5.1.4 Opamp Pinout Overview

The specific opamp terminals available in EFM32WG230 is shown in the following figure.

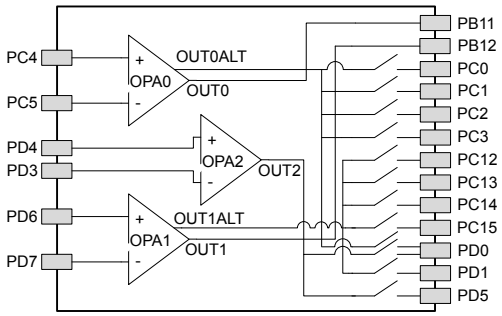

Figure 5.2. Opamp Pinout

5.2 EFM32WG232 (TQFP64)

5.2.1 Pinout

The EFM32WG232 pinout is shown in the following figure and table. Alternate locations are denoted by "#" followed by the location number (Multiple locations on the same pin are split with "/"). Alternate locations can be configured in the LOCATION bitfield in the *_ROUTE register in the module in question.

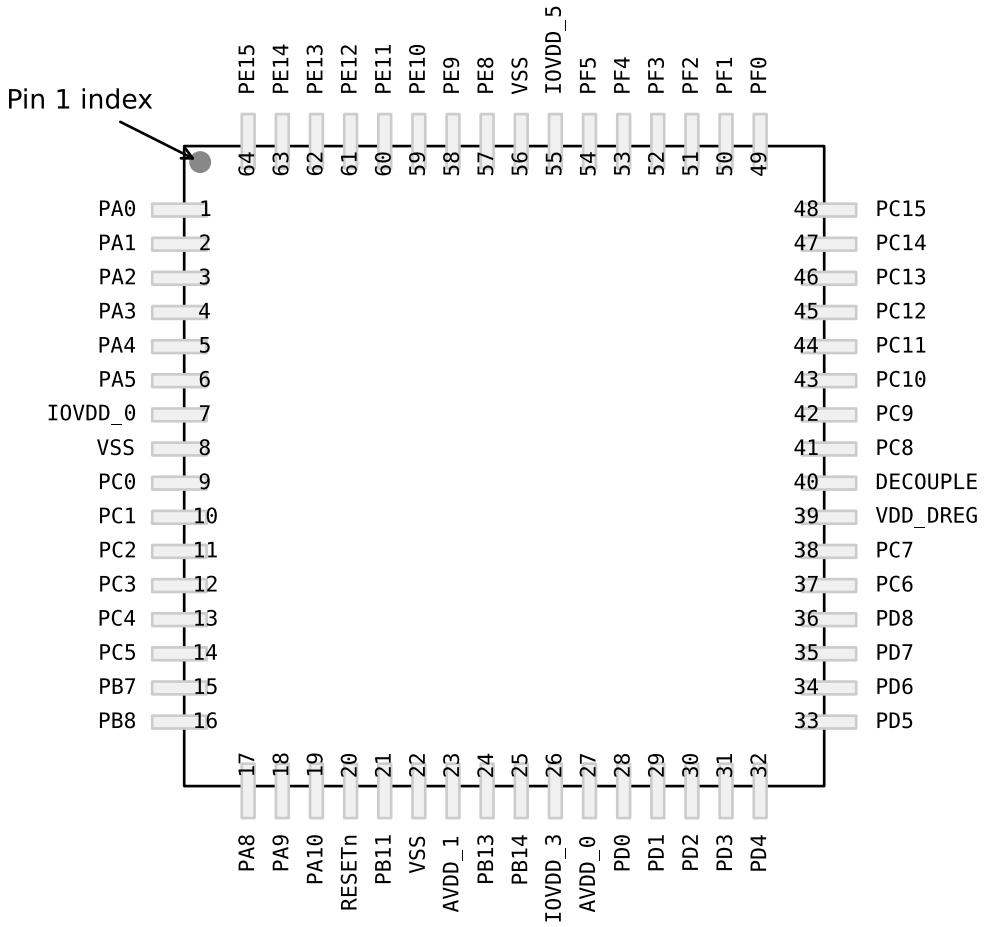

Figure 5.3. EFM32WG232 Pinout (top view, not to scale)

Table 5.4. Device Pinout

QFP64 Pin# and Name		Pin Alternate Functionality / Description			
Pin #	**Pin Name**	**Analog**	**Timers**	**Communication**	**Other**
1	PA0		TIM0_CC0 #0/1/4	LEU0_RX #4 I2C0_SDA #0	PRS_CH0 #0 GPIO_EM4WU0
2	PA1		TIM0_CC1 #0/1	I2C0_SCL #0	CMU_CLK1 #0 PRS_CH1 #0
3	PA2		TIM0_CC2 #0/1		CMU_CLK0 #0 ETM_TD0 #3

QFP64 Pin# and Name		Pin Alternate Functionality / Description			
Pin #	Pin Name	Analog	Timers	Communication	Other
4	PA3		TIM0_CDTI0 #0		LES_ALTEX2 #0 ETM_TD1 #3
5	PA4		TIM0_CDTI1 #0		LES_ALTEX3 #0 ETM_TD2 #3
6	PA5		TIM0_CDTI2 #0	LEU1_TX #1	LES_ALTEX4 #0 ETM_TD3 #3
7	IOVDD_0	Digital IO power supply 0.			
8	VSS	Ground.			
9	PC0	ACMP0_CH0 DAC0_OUT0ALT #0/ OPAMP_OUT0ALT	TIM0_CC1 #4 PCNT0_S0IN #2	US0_TX #5 US1_TX #0 I2C0_SDA #4	LES_CH0 #0 PRS_CH2 #0
10	PC1	ACMP0_CH1 DAC0_OUT0ALT #1/ OPAMP_OUT0ALT	TIM0_CC2 #4 PCNT0_S1IN #2	US0_RX #5 US1_RX #0 I2C0_SCL #4	LES_CH1 #0 PRS_CH3 #0
11	PC2	ACMP0_CH2 DAC0_OUT0ALT #2/ OPAMP_OUT0ALT	TIM0_CDTI0 #4	US2_TX #0	LES_CH2 #0
12	PC3	ACMP0_CH3 DAC0_OUT0ALT #3/ OPAMP_OUT0ALT	TIM0_CDTI1 #4	US2_RX #0	LES_CH3 #0
13	PC4	ACMP0_CH4 / DAC0_P0 / OPAMP_P0	TIM0_CDTI2 #4 LE-TIM0_OUT0 #3 PCNT1_S0IN #0	US2_CLK #0 I2C1_SDA #0	LES_CH4 #0
14	PC5	ACMP0_CH5 / DAC0_N0 / OPAMP_N0	LETIM0_OUT1 #3 PCNT1_S1IN #0	US2_CS #0 I2C1_SCL #0	LES_CH5 #0
15	PB7	LFXTAL_P	TIM1_CC0 #3	US0_TX #4 US1_CLK #0	
16	PB8	LFXTAL_N	TIM1_CC1 #3	US0_RX #4 US1_CS #0	
17	PA8		TIM2_CC0 #0		
18	PA9		TIM2_CC1 #0		
19	PA10		TIM2_CC2 #0		
20	RESETn	Reset input, active low. To apply an external reset source to this pin, it is required to only drive this pin low during reset, and let the internal pull-up ensure that reset is released.			
21	PB11	DAC0_OUT0 / OPAMP_OUT0	TIM1_CC2 #3 LE-TIM0_OUT0 #1	I2C1_SDA #1	
22	VSS	Ground.			
23	AVDD_1	Analog power supply 1.			
24	PB13	HFXTAL_P		US0_CLK #4/5 LEU0_TX #1	
25	PB14	HFXTAL_N		US0_CS #4/5 LEU0_RX #1	
26	IOVDD_3	Digital IO power supply 3.			
27	AVDD_0	Analog power supply 0.			

QFP64 Pin# and Name		Pin Alternate Functionality / Description			
Pin #	Pin Name	Analog	Timers	Communication	Other
28	PD0	ADC0_CH0 DAC0_OUT0ALT #4/ OPAMP_OUT0ALT OPAMP_OUT2 #1	PCNT2_S0IN #0	US1_TX #1	
29	PD1	ADC0_CH1 DAC0_OUT1ALT #4/ OPAMP_OUT1ALT	TIM0_CC0 #3 PCNT2_S1IN #0	US1_RX #1	DBG_SWO #2
30	PD2	ADC0_CH2	TIM0_CC1 #3	US1_CLK #1	DBG_SWO #3
31	PD3	ADC0_CH3 OPAMP_N2	TIM0_CC2 #3	US1_CS #1	ETM_TD1 #0/2
32	PD4	ADC0_CH4 OPAMP_P2		LEU0_TX #0	ETM_TD2 #0/2
33	PD5	ADC0_CH5 OPAMP_OUT2 #0		LEU0_RX #0	ETM_TD3 #0/2
34	PD6	ADC0_CH6 / DAC0_P1 / OPAMP_P1	TIM1_CC0 #4 LE-TIM0_OUT0 #0 PCNT0_S0IN #3	US1_RX #2 I2C0_SDA #1	LES_ALTEX0 #0 ACMP0_O #2 ETM_TD0 #0
35	PD7	ADC0_CH7 / DAC0_N1 / OPAMP_N1	TIM1_CC1 #4 LE-TIM0_OUT1 #0 PCNT0_S1IN #3	US1_TX #2 I2C0_SCL #1	CMU_CLK0 #2 LES_ALTEX1 #0 ACMP1_O #2 ETM_TCLK #0
36	PD8	BU_VIN			CMU_CLK1 #1
37	PC6	ACMP0_CH6		LEU1_TX #0 I2C0_SDA #2	LES_CH6 #0 ETM_TCLK #2
38	PC7	ACMP0_CH7		LEU1_RX #0 I2C0_SCL #2	LES_CH7 #0 ETM_TD0 #2
39	VDD_DREG	Power supply for on-chip voltage regulator.			
40	DECOUPLE	Decouple output for on-chip voltage regulator. An external capacitance of size $C_{DECOUPLE}$ is required at this pin.			
41	PC8	ACMP1_CH0	TIM2_CC0 #2	US0_CS #2	LES_CH8 #0
42	PC9	ACMP1_CH1	TIM2_CC1 #2	US0_CLK #2	LES_CH9 #0 GPIO_EM4WU2
43	PC10	ACMP1_CH2	TIM2_CC2 #2	US0_RX #2	LES_CH10 #0
44	PC11	ACMP1_CH3		US0_TX #2	LES_CH11 #0
45	PC12	ACMP1_CH4 DAC0_OUT1ALT #0/ OPAMP_OUT1ALT			CMU_CLK0 #1 LES_CH12 #0
46	PC13	ACMP1_CH5 DAC0_OUT1ALT #1/ OPAMP_OUT1ALT	TIM0_CDTI0 #1/3 TIM1_CC0 #0 TIM1_CC2 #4 PCNT0_S0IN #0		LES_CH13 #0
47	PC14	ACMP1_CH6 DAC0_OUT1ALT #2/ OPAMP_OUT1ALT	TIM0_CDTI1 #1/3 TIM1_CC1 #0 PCNT0_S1IN #0	US0_CS #3	LES_CH14 #0
48	PC15	ACMP1_CH7 DAC0_OUT1ALT #3/ OPAMP_OUT1ALT	TIM0_CDTI2 #1/3 TIM1_CC2 #0	US0_CLK #3	LES_CH15 #0 DBG_SWO #1

QFP64 Pin# and Name		Pin Alternate Functionality / Description			
Pin #	Pin Name	Analog	Timers	Communication	Other
49	PF0		TIM0_CC0 #5 LE-TIM0_OUT0 #2	US1_CLK #2 LEU0_TX #3 I2C0_SDA #5	DBG_SWCLK #0/1/2/3
50	PF1		TIM0_CC1 #5 LE-TIM0_OUT1 #2	US1_CS #2 LEU0_RX #3 I2C0_SCL #5	DBG_SWDIO #0/1/2/3 GPIO_EM4WU3
51	PF2		TIM0_CC2 #5	LEU0_TX #4	ACMP1_O #0 DBG_SWO #0 GPIO_EM4WU4
52	PF3		TIM0_CDTI0 #2/5		PRS_CH0 #1 ETM_TD3 #1
53	PF4		TIM0_CDTI1 #2/5		PRS_CH1 #1
54	PF5		TIM0_CDTI2 #2/5		PRS_CH2 #1
55	IOVDD_5	Digital IO power supply 5.			
56	VSS	Ground.			
57	PE8		PCNT2_S0IN #1		PRS_CH3 #1
58	PE9		PCNT2_S1IN #1		
59	PE10		TIM1_CC0 #1	US0_TX #0	BOOT_TX
60	PE11		TIM1_CC1 #1	US0_RX #0	LES_ALTEX5 #0 BOOT_RX
61	PE12		TIM1_CC2 #1	US0_RX #3 US0_CLK #0 I2C0_SDA #6	CMU_CLK1 #2 LES_ALTEX6 #0
62	PE13			US0_TX #3 US0_CS #0 I2C0_SCL #6	LES_ALTEX7 #0 ACMP0_O #0 GPIO_EM4WU5
63	PE14		TIM3_CC0 #0	LEU0_TX #2	
64	PE15		TIM3_CC1 #0	LEU0_RX #2	

5.2.2 Alternate Functionality Pinout

A wide selection of alternate functionality is available for multiplexing to various pins. This is shown in the following table. The table shows the name of the alternate functionality in the first column, followed by columns showing the possible LOCATION bitfield settings.

Note: Some functionality, such as analog interfaces, do not have alternate settings or a LOCATION bitfield. In these cases, the pinout is shown in the column corresponding to LOCATION 0.

Table 5.5. Alternate Functionality Overview

Alternate	LOCATION							
Functionality	0	1	2	3	4	5	6	Description
ACMP0_CH0	PC0							Analog comparator ACMP0, channel 0.
ACMP0_CH1	PC1							Analog comparator ACMP0, channel 1.
ACMP0_CH2	PC2							Analog comparator ACMP0, channel 2.
ACMP0_CH3	PC3							Analog comparator ACMP0, channel 3.
ACMP0_CH4	PC4							Analog comparator ACMP0, channel 4.
ACMP0_CH5	PC5							Analog comparator ACMP0, channel 5.
ACMP0_CH6	PC6							Analog comparator ACMP0, channel 6.
ACMP0_CH7	PC7							Analog comparator ACMP0, channel 7.
ACMP0_O	PE13		PD6					Analog comparator ACMP0, digital output.
ACMP1_CH0	PC8							Analog comparator ACMP1, channel 0.
ACMP1_CH1	PC9							Analog comparator ACMP1, channel 1.
ACMP1_CH2	PC10							Analog comparator ACMP1, channel 2.
ACMP1_CH3	PC11							Analog comparator ACMP1, channel 3.
ACMP1_CH4	PC12							Analog comparator ACMP1, channel 4.
ACMP1_CH5	PC13							Analog comparator ACMP1, channel 5.
ACMP1_CH6	PC14							Analog comparator ACMP1, channel 6.
ACMP1_CH7	PC15							Analog comparator ACMP1, channel 7.
ACMP1_O	PF2		PD7					Analog comparator ACMP1, digital output.
ADC0_CH0	PD0							Analog to digital converter ADC0, input channel number 0.
ADC0_CH1	PD1							Analog to digital converter ADC0, input channel number 1.
ADC0_CH2	PD2							Analog to digital converter ADC0, input channel number 2.
ADC0_CH3	PD3							Analog to digital converter ADC0, input channel number 3.
ADC0_CH4	PD4							Analog to digital converter ADC0, input channel number 4.
ADC0_CH5	PD5							Analog to digital converter ADC0, input channel number 5.
ADC0_CH6	PD6							Analog to digital converter ADC0, input channel number 6.

Alternate	LOCATION							
Functionality	0	1	2	3	4	5	6	Description
ADC0_CH7	PD7							Analog to digital converter ADC0, input channel number 7.
BOOT_RX	PE11							Bootloader RX.
BOOT_TX	PE10							Bootloader TX.
BU_VIN	PD8							Battery input for Backup Power Domain
CMU_CLK0	PA2	PC12	PD7					Clock Management Unit, clock output number 0.
CMU_CLK1	PA1	PD8	PE12					Clock Management Unit, clock output number 1.
DAC0_OUT0 / OPAMP_OUT0	PB11							Digital to Analog Converter DAC0_OUT0 /OPAMP output channel number 0.
DAC0_OUT0ALT / OPAMP_OUT0ALT	PC0	PC1	PC2	PC3	PD0			Digital to Analog Converter DAC0_OUT0ALT / OPAMP alternative output for channel 0.
DAC0_OUT1ALT / OPAMP_OUT1ALT	PC12	PC13	PC14	PC15	PD1			Digital to Analog Converter DAC0_OUT1ALT / OPAMP alternative output for channel 1.
DBG_SWCLK	PF0	PF0	PF0	PF0				Debug-interface Serial Wire clock input. Note that this function is enabled to pin out of reset, and has a built-in pull down.
DBG_SWDIO	PF1	PF1	PF1	PF1				Debug-interface Serial Wire data input / output. Note that this function is enabled to pin out of reset, and has a built-in pull up.
DBG_SWO	PF2	PC15	PD1	PD2				Debug-interface Serial Wire viewer Output. Note that this function is not enabled after reset, and must be enabled by software to be used.
ETM_TCLK	PD7		PC6					Embedded Trace Module ETM clock .
ETM_TD0	PD6		PC7	PA2				Embedded Trace Module ETM data 0.
ETM_TD1	PD3		PD3	PA3				Embedded Trace Module ETM data 1.
ETM_TD2	PD4		PD4	PA4				Embedded Trace Module ETM data 2.
ETM_TD3	PD5	PF3	PD5	PA5				Embedded Trace Module ETM data 3.
GPIO_EM4WU0	PA0							Pin can be used to wake the system up from EM4
GPIO_EM4WU2	PC9							Pin can be used to wake the system up from EM4
GPIO_EM4WU3	PF1							Pin can be used to wake the system up from EM4
GPIO_EM4WU4	PF2							Pin can be used to wake the system up from EM4
GPIO_EM4WU5	PE13							Pin can be used to wake the system up from EM4
HFXTAL_N	PB14							High Frequency Crystal negative pin. Also used as external optional clock input pin.
HFXTAL_P	PB13							High Frequency Crystal positive pin.
I2C0_SCL	PA1	PD7	PC7		PC1	PF1	PE13	I2C0 Serial Clock Line input / output.
I2C0_SDA	PA0	PD6	PC6		PC0	PF0	PE12	I2C0 Serial Data input / output.
I2C1_SCL	PC5							I2C1 Serial Clock Line input / output.

Alternate	LOCATION							
Functionality	0	1	2	3	4	5	6	Description
I2C1_SDA	PC4							I2C1 Serial Data input / output.
LES_ALTEX0	PD6							LESENSE alternate exite output 0.
LES_ALTEX1	PD7							LESENSE alternate exite output 1.
LES_ALTEX2	PA3							LESENSE alternate exite output 2.
LES_ALTEX3	PA4							LESENSE alternate exite output 3.
LES_ALTEX4	PA5							LESENSE alternate exite output 4.
LES_ALTEX5	PE11							LESENSE alternate exite output 5.
LES_ALTEX6	PE12							LESENSE alternate exite output 6.
LES_ALTEX7	PE13							LESENSE alternate exite output 7.
LES_CH0	PC0							LESENSE channel 0.
LES_CH1	PC1							LESENSE channel 1.
LES_CH2	PC2							LESENSE channel 2.
LES_CH3	PC3							LESENSE channel 3.
LES_CH4	PC4							LESENSE channel 4.
LES_CH5	PC5							LESENSE channel 5.
LES_CH6	PC6							LESENSE channel 6.
LES_CH7	PC7							LESENSE channel 7.
LES_CH8	PC8							LESENSE channel 8.
LES_CH9	PC9							LESENSE channel 9.
LES_CH10	PC10							LESENSE channel 10.
LES_CH11	PC11							LESENSE channel 11.
LES_CH12	PC12							LESENSE channel 12.
LES_CH13	PC13							LESENSE channel 13.
LES_CH14	PC14							LESENSE channel 14.
LES_CH15	PC15							LESENSE channel 15.
LETIM0_OUT0	PD6	PB11	PF0	PC4				Low Energy Timer LETIM0, output channel 0.
LETIM0_OUT1	PD7		PF1	PC5				Low Energy Timer LETIM0, output channel 1.
LEU0_RX	PD5	PB14	PE15	PF1	PA0			LEUART0 Receive input.
LEU0_TX	PD4	PB13	PE14	PF0	PF2			LEUART0 Transmit output. Also used as receive input in half duplex communication.
LEU1_RX	PC7							LEUART1 Receive input.
LEU1_TX	PC6	PA5						LEUART1 Transmit output. Also used as receive input in half duplex communication.
LFXTAL_N	PB8							Low Frequency Crystal (typically 32.768 kHz) negative pin. Also used as an optional external clock input pin.
LFXTAL_P	PB7							Low Frequency Crystal (typically 32.768 kHz) positive pin.

Alternate	LOCATION							
Functionality	0	1	2	3	4	5	6	Description
OPAMP_N0 / DAC0_N0	PC5							Operational Amplifier 0 external negative input.
OPAMP_N1 / DAC0_N1	PD7							Operational Amplifier 1 external negative input.
OPAMP_N2	PD3							Operational Amplifier 2 external negative input.
OPAMP_OUT2	PD5	PD0						Operational Amplifier 2 output.
OPAMP_P0 / DAC0_P0	PC4							Operational Amplifier 0 external positive input.
OPAMP_P1 / DAC0_P1	PD6							Operational Amplifier 1 external positive input.
OPAMP_P2	PD4							Operational Amplifier 2 external positive input.
PCNT0_S0IN	PC13		PC0	PD6				Pulse Counter PCNT0 input number 0.
PCNT0_S1IN	PC14		PC1	PD7				Pulse Counter PCNT0 input number 1.
PCNT1_S0IN	PC4							Pulse Counter PCNT1 input number 0.
PCNT1_S1IN	PC5							Pulse Counter PCNT1 input number 1.
PCNT2_S0IN	PD0	PE8						Pulse Counter PCNT2 input number 0.
PCNT2_S1IN	PD1	PE9						Pulse Counter PCNT2 input number 1.
PRS_CH0	PA0	PF3						Peripheral Reflex System PRS, channel 0.
PRS_CH1	PA1	PF4						Peripheral Reflex System PRS, channel 1.
PRS_CH2	PC0	PF5						Peripheral Reflex System PRS, channel 2.
PRS_CH3	PC1	PE8						Peripheral Reflex System PRS, channel 3.
TIM0_CC0	PA0	PA0		PD1	PA0	PF0		Timer 0 Capture Compare input / output channel 0.
TIM0_CC1	PA1	PA1		PD2	PC0	PF1		Timer 0 Capture Compare input / output channel 1.
TIM0_CC2	PA2	PA2		PD3	PC1	PF2		Timer 0 Capture Compare input / output channel 2.
TIM0_CDTI0	PA3	PC13	PF3	PC13	PC2	PF3		Timer 0 Complimentary Dead Time Insertion channel 0.
TIM0_CDTI1	PA4	PC14	PF4	PC14	PC3	PF4		Timer 0 Complimentary Dead Time Insertion channel 1.
TIM0_CDTI2	PA5	PC15	PF5	PC15	PC4	PF5		Timer 0 Complimentary Dead Time Insertion channel 2.
TIM1_CC0	PC13	PE10		PB7	PD6			Timer 1 Capture Compare input / output channel 0.
TIM1_CC1	PC14	PE11		PB8	PD7			Timer 1 Capture Compare input / output channel 1.
TIM1_CC2	PC15	PE12		PB11	PC13			Timer 1 Capture Compare input / output channel 2.
TIM2_CC0	PA8		PC8					Timer 2 Capture Compare input / output channel 0.
TIM2_CC1	PA9		PC9					Timer 2 Capture Compare input / output channel 1.
TIM2_CC2	PA10		PC10					Timer 2 Capture Compare input / output channel 2.
TIM3_CC0	PE14							Timer 3 Capture Compare input / output channel 0.
TIM3_CC1	PE15							Timer 3 Capture Compare input / output channel 1.
US0_CLK	PE12		PC9	PC15	PB13	PB13		USART0 clock input / output.

Alternate	LOCATION							
Functionality	0	1	2	3	4	5	6	Description
US0_CS	PE13		PC8	PC14	PB14	PB14		USART0 chip select input / output.
US0_RX	PE11		PC10	PE12	PB8	PC1		USART0 Asynchronous Receive. USART0 Synchronous mode Main Input / Secondary Output (MISO).
US0_TX	PE10		PC11	PE13	PB7	PC0		USART0 Asynchronous Transmit.Also used as receive input in half duplex communication. USART0 Synchronous mode Main Output / Secondary Input (MOSI).
US1_CLK	PB7	PD2	PF0					USART1 clock input / output.
US1_CS	PB8	PD3	PF1					USART1 chip select input / output.
US1_RX	PC1	PD1	PD6					USART1 Asynchronous Receive. USART1 Synchronous mode Main Input / Secondary Output (MISO).
US1_TX	PC0	PD0	PD7					USART1 Asynchronous Transmit.Also used as receive input in half duplex communication. USART1 Synchronous mode Main Output / Secondary Input (MOSI).
US2_CLK	PC4							USART2 clock input / output.
US2_CS	PC5							USART2 chip select input / output.
US2_RX	PC3							USART2 Asynchronous Receive. USART2 Synchronous mode Main Input / Secondary Output (MISO).
US2_TX	PC2							USART2 Asynchronous Transmit.Also used as receive input in half duplex communication. USART2 Synchronous mode Main Output / Secondary Input (MOSI).

5.2.3 GPIO Pinout Overview

The specific GPIO pins available in EFM32WG232 are shown in the following table. Each GPIO port is organized as 16-bit ports indicated by letters A through F, and the individual pin on this port is indicated by a number from 15 down to 0.

Table 5.6. GPIO Pinout

Port	Pin 15	Pin 14	Pin 13	Pin 12	Pin 11	Pin 10	Pin 9	Pin 8	Pin 7	Pin 6	Pin 5	Pin 4	Pin 3	Pin 2	Pin 1	Pin 0
Port A	—	—	—	—	—	PA10	PA9	PA8	—	—	PA5	PA4	PA3	PA2	PA1	PA0
Port B	—	PB14	PB13	—	PB11	—	—	PB8	PB7	—	—	—	—	—	—	—
Port C	PC15	PC14	PC13	PC12	PC11	PC10	PC9	PC8	PC7	PC6	PC5	PC4	PC3	PC2	PC1	PC0
Port D	—	—	—	—	—	—	—	PD8	PD7	PD6	PD5	PD4	PD3	PD2	PD1	PD0
Port E	PE15	PE14	PE13	PE12	PE11	PE10	PE9	PE8	—	—	—	—	—	—	—	—
Port F	—	—	—	—	—	—	—	—	—	—	PF5	PF4	PF3	PF2	PF1	PF0

5.2.4 Opamp Pinout Overview

The specific opamp terminals available in EFM32WG232 is shown in the following figure.

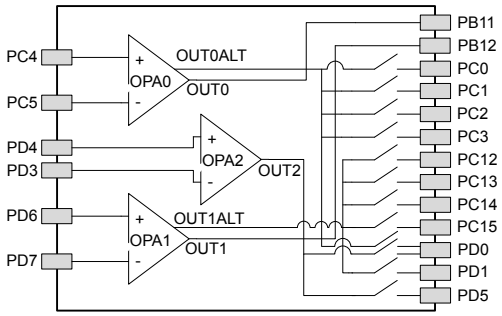

Figure 5.4. Opamp Pinout

5.3 EFM32WG280 (LQFP100)

5.3.1 Pinout

The EFM32WG280 pinout is shown in the following figure and table. Alternate locations are denoted by "#" followed by the location number (Multiple locations on the same pin are split with "/"). Alternate locations can be configured in the LOCATION bitfield in the *_ROUTE register in the module in question.

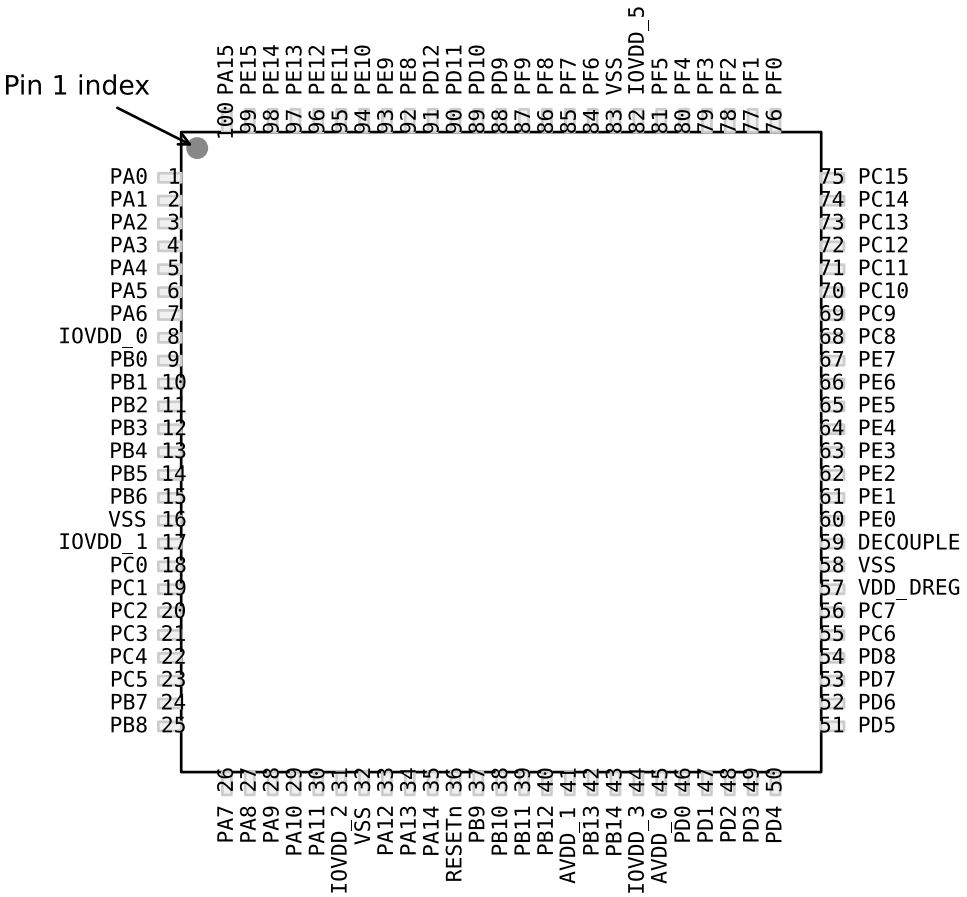

Figure 5.5. EFM32WG280 Pinout (top view, not to scale)

Table 5.7. Device Pinout

LQFP100 Pin# and Name		Pin Alternate Functionality / Description				
Pin #	Pin Name	Analog	EBI	Timers	Communication	Other
1	PA0		EBI_AD09 #0/1/2	TIM0_CC0 #0/1/4	LEU0_RX #4 I2C0_SDA #0	PRS_CH0 #0 GPIO_EM4WU0
2	PA1		EBI_AD10 #0/1/2	TIM0_CC1 #0/1	I2C0_SCL #0	CMU_CLK1 #0 PRS_CH1 #0
3	PA2		EBI_AD11 #0/1/2	TIM0_CC2 #0/1		CMU_CLK0 #0 ETM_TD0 #3
4	PA3		EBI_AD12 #0/1/2	TIM0_CDTI0 #0	U0_TX #2	LES_ALTEX2 #0 ETM_TD1 #3
5	PA4		EBI_AD13 #0/1/2	TIM0_CDTI1 #0	U0_RX #2	LES_ALTEX3 #0 ETM_TD2 #3
6	PA5		EBI_AD14 #0/1/2	TIM0_CDTI2 #0	LEU1_TX #1	LES_ALTEX4 #0 ETM_TD3 #3
7	PA6		EBI_AD15 #0/1/2		LEU1_RX #1	ETM_TCLK #3 GPIO_EM4WU1
8	IOVDD_0	Digital IO power supply 0.				
9	PB0		EBI_A16 #0/1/2	TIM1_CC0 #2		
10	PB1		EBI_A17 #0/1/2	TIM1_CC1 #2		
11	PB2		EBI_A18 #0/1/2	TIM1_CC2 #2		
12	PB3		EBI_A19 #0/1/2	PCNT1_S0IN #1	US2_TX #1	
13	PB4		EBI_A20 #0/1/2	PCNT1_S1IN #1	US2_RX #1	
14	PB5		EBI_A21 #0/1/2		US2_CLK #1	
15	PB6		EBI_A22 #0/1/2		US2_CS #1	
16	VSS	Ground.				
17	IOVDD_1	Digital IO power supply 1.				
18	PC0	ACMP0_CH0 DAC0_OUT0ALT #0/ OPAMP_OUT0ALT	EBI_A23 #0/1/2	TIM0_CC1 #4 PCNT0_S0IN #2	US0_TX #5 US1_TX #0 I2C0_SDA #4	LES_CH0 #0 PRS_CH2 #0
19	PC1	ACMP0_CH1 DAC0_OUT0ALT #1/ OPAMP_OUT0ALT	EBI_A24 #0/1/2	TIM0_CC2 #4 PCNT0_S1IN #2	US0_RX #5 US1_RX #0 I2C0_SCL #4	LES_CH1 #0 PRS_CH3 #0
20	PC2	ACMP0_CH2 DAC0_OUT0ALT #2/ OPAMP_OUT0ALT	EBI_A25 #0/1/2	TIM0_CDTI0 #4	US2_TX #0	LES_CH2 #0
21	PC3	ACMP0_CH3 DAC0_OUT0ALT #3/ OPAMP_OUT0ALT	EBI_NANDREn #0/1/2	TIM0_CDTI1 #4	US2_RX #0	LES_CH3 #0

LQFP100 Pin# and Name		Pin Alternate Functionality / Description				
Pin #	Pin Name	Analog	EBI	Timers	Communication	Other
22	PC4	ACMP0_CH4 / DAC0_P0 / OPAMP_P0	EBI_A26 #0/1/2	TIM0_CDTI2 #4 LE-TIM0_OUT0 #3 PCNT1_S0IN #0	US2_CLK #0 I2C1_SDA #0	LES_CH4 #0
23	PC5	ACMP0_CH5 / DAC0_N0 / OPAMP_N0	EBI_NANDWEn #0/1/2	LETIM0_OUT1 #3 PCNT1_S1IN #0	US2_CS #0 I2C1_SCL #0	LES_CH5 #0
24	PB7	LFXTAL_P		TIM1_CC0 #3	US0_TX #4 US1_CLK #0	
25	PB8	LFXTAL_N		TIM1_CC1 #3	US0_RX #4 US1_CS #0	
26	PA7		EBI_CSTFT #0/1/2			
27	PA8		EBI_DCLK #0/1/2	TIM2_CC0 #0		
28	PA9		EBI_DTEN #0/1/2	TIM2_CC1 #0		
29	PA10		EBI_VSNC #0/1/2	TIM2_CC2 #0		
30	PA11		EBI_HSNC #0/1/2			
31	IOVDD_2	Digital IO power supply 2.				
32	VSS	Ground.				
33	PA12		EBI_A00 #0/1/2	TIM2_CC0 #1		
34	PA13		EBI_A01 #0/1/2	TIM2_CC1 #1		
35	PA14		EBI_A02 #0/1/2	TIM2_CC2 #1		
36	RESETn	Reset input, active low. To apply an external reset source to this pin, it is required to only drive this pin low during reset, and let the internal pull-up ensure that reset is released.				
37	PB9		EBI_A03 #0/1/2		U1_TX #2	
38	PB10		EBI_A04 #0/1/2		U1_RX #2	
39	PB11	DAC0_OUT0 / OPAMP_OUT0		TIM1_CC2 #3 LE-TIM0_OUT0 #1	I2C1_SDA #1	
40	PB12	DAC0_OUT1 / OPAMP_OUT1		LETIM0_OUT1 #1	I2C1_SCL #1	
41	AVDD_1	Analog power supply 1.				
42	PB13	HFXTAL_P			US0_CLK #4/5 LEU0_TX #1	
43	PB14	HFXTAL_N			US0_CS #4/5 LEU0_RX #1	
44	IOVDD_3	Digital IO power supply 3.				
45	AVDD_0	Analog power supply 0.				
46	PD0	ADC0_CH0 DAC0_OUT0ALT #4/ OPAMP_OUT0ALT OPAMP_OUT2 #1		PCNT2_S0IN #0	US1_TX #1	

LQFP100 Pin# and Name		Pin Alternate Functionality / Description				
Pin #	Pin Name	Analog	EBI	Timers	Communication	Other
47	PD1	ADC0_CH1 DAC0_OUT1ALT #4/ OPAMP_OUT1ALT		TIM0_CC0 #3 PCNT2_S1IN #0	US1_RX #1	DBG_SWO #2
48	PD2	ADC0_CH2	EBI_A27 #0/1/2	TIM0_CC1 #3	US1_CLK #1	DBG_SWO #3
49	PD3	ADC0_CH3 OPAMP_N2		TIM0_CC2 #3	US1_CS #1	ETM_TD1 #0/2
50	PD4	ADC0_CH4 OPAMP_P2			LEU0_TX #0	ETM_TD2 #0/2
51	PD5	ADC0_CH5 OPAMP_OUT2 #0			LEU0_RX #0	ETM_TD3 #0/2
52	PD6	ADC0_CH6 / DAC0_P1 / OPAMP_P1		TIM1_CC0 #4 LE-TIM0_OUT0 #0 PCNT0_S0IN #3	US1_RX #2 I2C0_SDA #1	LES_ALTEX0 #0 ACMP0_O #2 ETM_TD0 #0
53	PD7	ADC0_CH7 / DAC0_N1 / OPAMP_N1		TIM1_CC1 #4 LE-TIM0_OUT1 #0 PCNT0_S1IN #3	US1_TX #2 I2C0_SCL #1	CMU_CLK0 #2 LES_ALTEX1 #0 ACMP1_O #2 ETM_TCLK #0
54	PD8	BU_VIN				CMU_CLK1 #1
55	PC6	ACMP0_CH6	EBI_A05 #0/1/2		LEU1_TX #0 I2C0_SDA #2	LES_CH6 #0 ETM_TCLK #2
56	PC7	ACMP0_CH7	EBI_A06 #0/1/2		LEU1_RX #0 I2C0_SCL #2	LES_CH7 #0 ETM_TD0 #2
57	VDD_DREG	Power supply for on-chip voltage regulator.				
58	VSS	Ground.				
59	DECOUPLE	Decouple output for on-chip voltage regulator. An external capacitance of size $C_{DECOUPLE}$ is required at this pin.				
60	PE0		EBI_A07 #0/1/2	TIM3_CC0 #1 PCNT0_S0IN #1	U0_TX #1 I2C1_SDA #2	
61	PE1		EBI_A08 #0/1/2	TIM3_CC1 #1 PCNT0_S1IN #1	U0_RX #1 I2C1_SCL #2	
62	PE2	BU_VOUT	EBI_A09 #0	TIM3_CC2 #1	U1_TX #3	ACMP0_O #1
63	PE3	BU_STAT	EBI_A10 #0		U1_RX #3	ACMP1_O #1
64	PE4		EBI_A11 #0/1/2		US0_CS #1	
65	PE5		EBI_A12 #0/1/2		US0_CLK #1	
66	PE6		EBI_A13 #0/1/2		US0_RX #1	
67	PE7		EBI_A14 #0/1/2		US0_TX #1	
68	PC8	ACMP1_CH0	EBI_A15 #0/1/2	TIM2_CC0 #2	US0_CS #2	LES_CH8 #0
69	PC9	ACMP1_CH1	EBI_A09 #1/2	TIM2_CC1 #2	US0_CLK #2	LES_CH9 #0 GPIO_EM4WU2
70	PC10	ACMP1_CH2	EBI_A10 #1/2	TIM2_CC2 #2	US0_RX #2	LES_CH10 #0
71	PC11	ACMP1_CH3	EBI_ALE #1/2		US0_TX #2	LES_CH11 #0

LQFP100 Pin# and Name		Pin Alternate Functionality / Description				
Pin #	Pin Name	Analog	EBI	Timers	Communication	Other
72	PC12	ACMP1_CH4 DAC0_OUT1ALT #0/ OPAMP_OUT1ALT			U1_TX #0	CMU_CLK0 #1 LES_CH12 #0
73	PC13	ACMP1_CH5 DAC0_OUT1ALT #1/ OPAMP_OUT1ALT		TIM0_CDTI0 #1/3 TIM1_CC0 #0 TIM1_CC2 #4 PCNT0_S0IN #0	U1_RX #0	LES_CH13 #0
74	PC14	ACMP1_CH6 DAC0_OUT1ALT #2/ OPAMP_OUT1ALT		TIM0_CDTI1 #1/3 TIM1_CC1 #0 PCNT0_S1IN #0	US0_CS #3 U0_TX #3	LES_CH14 #0
75	PC15	ACMP1_CH7 DAC0_OUT1ALT #3/ OPAMP_OUT1ALT		TIM0_CDTI2 #1/3 TIM1_CC2 #0	US0_CLK #3 U0_RX #3	LES_CH15 #0 DBG_SWO #1
76	PF0			TIM0_CC0 #5 LE-TIM0_OUT0 #2	US1_CLK #2 LEU0_TX #3 I2C0_SDA #5	DBG_SWCLK #0/1/2/3
77	PF1			TIM0_CC1 #5 LE-TIM0_OUT1 #2	US1_CS #2 LEU0_RX #3 I2C0_SCL #5	DBG_SWDIO #0/1/2/3 GPIO_EM4WU3
78	PF2		EBI_ARDY #0/1/2	TIM0_CC2 #5	LEU0_TX #4	ACMP1_O #0 DBG_SWO #0 GPIO_EM4WU4
79	PF3		EBI_ALE #0	TIM0_CDTI0 #2/5		PRS_CH0 #1 ETM_TD3 #1
80	PF4		EBI_WEn #0/2	TIM0_CDTI1 #2/5		PRS_CH1 #1
81	PF5		EBI_REn #0/2	TIM0_CDTI2 #2/5		PRS_CH2 #1
82	IOVDD_5	Digital IO power supply 5.				
83	VSS	Ground.				
84	PF6		EBI_BL0 #0/1/2	TIM0_CC0 #2	U0_TX #0	
85	PF7		EBI_BL1 #0/1/2	TIM0_CC1 #2	U0_RX #0	
86	PF8		EBI_WEn #1	TIM0_CC2 #2		ETM_TCLK #1
87	PF9		EBI_REn #1			ETM_TD0 #1
88	PD9		EBI_CS0 #0/1/2			
89	PD10		EBI_CS1 #0/1/2			
90	PD11		EBI_CS2 #0/1/2			
91	PD12		EBI_CS3 #0/1/2			
92	PE8		EBI_AD00 #0/1/2	PCNT2_S0IN #1		PRS_CH3 #1
93	PE9		EBI_AD01 #0/1/2	PCNT2_S1IN #1		
94	PE10		EBI_AD02 #0/1/2	TIM1_CC0 #1	US0_TX #0	BOOT_TX
95	PE11		EBI_AD03 #0/1/2	TIM1_CC1 #1	US0_RX #0	LES_ALTEX5 #0 BOOT_RX

LQFP100 Pin# and Name		Pin Alternate Functionality / Description				
Pin #	Pin Name	Analog	EBI	Timers	Communication	Other
96	PE12		EBI_AD04 #0/1/2	TIM1_CC2 #1	US0_RX #3 US0_CLK #0 I2C0_SDA #6	CMU_CLK1 #2 LES_ALTEX6 #0
97	PE13		EBI_AD05 #0/1/2		US0_TX #3 US0_CS #0 I2C0_SCL #6	LES_ALTEX7 #0 ACMP0_O #0 GPIO_EM4WU5
98	PE14		EBI_AD06 #0/1/2	TIM3_CC0 #0	LEU0_TX #2	
99	PE15		EBI_AD07 #0/1/2	TIM3_CC1 #0	LEU0_RX #2	
100	PA15		EBI_AD08 #0/1/2	TIM3_CC2 #0		

5.3.2 Alternate Functionality Pinout

A wide selection of alternate functionality is available for multiplexing to various pins. This is shown in the following table. The table shows the name of the alternate functionality in the first column, followed by columns showing the possible LOCATION bitfield settings.

Note: Some functionality, such as analog interfaces, do not have alternate settings or a LOCATION bitfield. In these cases, the pinout is shown in the column corresponding to LOCATION 0.

Table 5.8. Alternate Functionality Overview

Alternate	LOCATION							
Functionality	0	1	2	3	4	5	6	Description
ACMP0_CH0	PC0							Analog comparator ACMP0, channel 0.
ACMP0_CH1	PC1							Analog comparator ACMP0, channel 1.
ACMP0_CH2	PC2							Analog comparator ACMP0, channel 2.
ACMP0_CH3	PC3							Analog comparator ACMP0, channel 3.
ACMP0_CH4	PC4							Analog comparator ACMP0, channel 4.
ACMP0_CH5	PC5							Analog comparator ACMP0, channel 5.
ACMP0_CH6	PC6							Analog comparator ACMP0, channel 6.
ACMP0_CH7	PC7							Analog comparator ACMP0, channel 7.
ACMP0_O	PE13	PE2	PD6					Analog comparator ACMP0, digital output.
ACMP1_CH0	PC8							Analog comparator ACMP1, channel 0.
ACMP1_CH1	PC9							Analog comparator ACMP1, channel 1.
ACMP1_CH2	PC10							Analog comparator ACMP1, channel 2.
ACMP1_CH3	PC11							Analog comparator ACMP1, channel 3.
ACMP1_CH4	PC12							Analog comparator ACMP1, channel 4.
ACMP1_CH5	PC13							Analog comparator ACMP1, channel 5.
ACMP1_CH6	PC14							Analog comparator ACMP1, channel 6.
ACMP1_CH7	PC15							Analog comparator ACMP1, channel 7.
ACMP1_O	PF2	PE3	PD7					Analog comparator ACMP1, digital output.
ADC0_CH0	PD0							Analog to digital converter ADC0, input channel number 0.
ADC0_CH1	PD1							Analog to digital converter ADC0, input channel number 1.
ADC0_CH2	PD2							Analog to digital converter ADC0, input channel number 2.
ADC0_CH3	PD3							Analog to digital converter ADC0, input channel number 3.
ADC0_CH4	PD4							Analog to digital converter ADC0, input channel number 4.
ADC0_CH5	PD5							Analog to digital converter ADC0, input channel number 5.
ADC0_CH6	PD6							Analog to digital converter ADC0, input channel number 6.

Alternate	LOCATION							
Functionality	0	1	2	3	4	5	6	Description
ADC0_CH7	PD7							Analog to digital converter ADC0, input channel number 7.
BOOT_RX	PE11							Bootloader RX.
BOOT_TX	PE10							Bootloader TX.
BU_STAT	PE3							Backup Power Domain status, whether or not the system is in backup mode
BU_VIN	PD8							Battery input for Backup Power Domain
BU_VOUT	PE2							Power output for Backup Power Domain
CMU_CLK0	PA2	PC12	PD7					Clock Management Unit, clock output number 0.
CMU_CLK1	PA1	PD8	PE12					Clock Management Unit, clock output number 1.
DAC0_OUT0 / OPAMP_OUT0	PB11							Digital to Analog Converter DAC0_OUT0 /OPAMP output channel number 0.
DAC0_OUT0ALT / OPAMP_OUT0ALT	PC0	PC1	PC2	PC3	PD0			Digital to Analog Converter DAC0_OUT0ALT / OPAMP alternative output for channel 0.
DAC0_OUT1 / OPAMP_OUT1	PB12							Digital to Analog Converter DAC0_OUT1 /OPAMP output channel number 1.
DAC0_OUT1ALT / OPAMP_OUT1ALT	PC12	PC13	PC14	PC15	PD1			Digital to Analog Converter DAC0_OUT1ALT / OPAMP alternative output for channel 1.
DBG_SWCLK	PF0	PF0	PF0	PF0				Debug-interface Serial Wire clock input. Note that this function is enabled to pin out of reset, and has a built-in pull down.
DBG_SWDIO	PF1	PF1	PF1	PF1				Debug-interface Serial Wire data input / output. Note that this function is enabled to pin out of reset, and has a built-in pull up.
DBG_SWO	PF2	PC15	PD1	PD2				Debug-interface Serial Wire viewer Output. Note that this function is not enabled after reset, and must be enabled by software to be used.
EBI_A00	PA12	PA12	PA12					External Bus Interface (EBI) address output pin 00.
EBI_A01	PA13	PA13	PA13					External Bus Interface (EBI) address output pin 01.
EBI_A02	PA14	PA14	PA14					External Bus Interface (EBI) address output pin 02.
EBI_A03	PB9	PB9	PB9					External Bus Interface (EBI) address output pin 03.
EBI_A04	PB10	PB10	PB10					External Bus Interface (EBI) address output pin 04.
EBI_A05	PC6	PC6	PC6					External Bus Interface (EBI) address output pin 05.
EBI_A06	PC7	PC7	PC7					External Bus Interface (EBI) address output pin 06.
EBI_A07	PE0	PE0	PE0					External Bus Interface (EBI) address output pin 07.
EBI_A08	PE1	PE1	PE1					External Bus Interface (EBI) address output pin 08.
EBI_A09	PE2	PC9	PC9					External Bus Interface (EBI) address output pin 09.
EBI_A10	PE3	PC10	PC10					External Bus Interface (EBI) address output pin 10.

Alternate	LOCATION							
Functionality	0	1	2	3	4	5	6	Description
EBI_A11	PE4	PE4	PE4					External Bus Interface (EBI) address output pin 11.
EBI_A12	PE5	PE5	PE5					External Bus Interface (EBI) address output pin 12.
EBI_A13	PE6	PE6	PE6					External Bus Interface (EBI) address output pin 13.
EBI_A14	PE7	PE7	PE7					External Bus Interface (EBI) address output pin 14.
EBI_A15	PC8	PC8	PC8					External Bus Interface (EBI) address output pin 15.
EBI_A16	PB0	PB0	PB0					External Bus Interface (EBI) address output pin 16.
EBI_A17	PB1	PB1	PB1					External Bus Interface (EBI) address output pin 17.
EBI_A18	PB2	PB2	PB2					External Bus Interface (EBI) address output pin 18.
EBI_A19	PB3	PB3	PB3					External Bus Interface (EBI) address output pin 19.
EBI_A20	PB4	PB4	PB4					External Bus Interface (EBI) address output pin 20.
EBI_A21	PB5	PB5	PB5					External Bus Interface (EBI) address output pin 21.
EBI_A22	PB6	PB6	PB6					External Bus Interface (EBI) address output pin 22.
EBI_A23	PC0	PC0	PC0					External Bus Interface (EBI) address output pin 23.
EBI_A24	PC1	PC1	PC1					External Bus Interface (EBI) address output pin 24.
EBI_A25	PC2	PC2	PC2					External Bus Interface (EBI) address output pin 25.
EBI_A26	PC4	PC4	PC4					External Bus Interface (EBI) address output pin 26.
EBI_A27	PD2	PD2	PD2					External Bus Interface (EBI) address output pin 27.
EBI_AD00	PE8	PE8	PE8					External Bus Interface (EBI) address and data input / output pin 00.
EBI_AD01	PE9	PE9	PE9					External Bus Interface (EBI) address and data input / output pin 01.
EBI_AD02	PE10	PE10	PE10					External Bus Interface (EBI) address and data input / output pin 02.
EBI_AD03	PE11	PE11	PE11					External Bus Interface (EBI) address and data input / output pin 03.
EBI_AD04	PE12	PE12	PE12					External Bus Interface (EBI) address and data input / output pin 04.
EBI_AD05	PE13	PE13	PE13					External Bus Interface (EBI) address and data input / output pin 05.
EBI_AD06	PE14	PE14	PE14					External Bus Interface (EBI) address and data input / output pin 06.
EBI_AD07	PE15	PE15	PE15					External Bus Interface (EBI) address and data input / output pin 07.
EBI_AD08	PA15	PA15	PA15					External Bus Interface (EBI) address and data input / output pin 08.
EBI_AD09	PA0	PA0	PA0					External Bus Interface (EBI) address and data input / output pin 09.
EBI_AD10	PA1	PA1	PA1					External Bus Interface (EBI) address and data input / output pin 10.
EBI_AD11	PA2	PA2	PA2					External Bus Interface (EBI) address and data input / output pin 11.

Alternate	LOCATION							
Functionality	0	1	2	3	4	5	6	Description
EBI_AD12	PA3	PA3	PA3					External Bus Interface (EBI) address and data input / output pin 12.
EBI_AD13	PA4	PA4	PA4					External Bus Interface (EBI) address and data input / output pin 13.
EBI_AD14	PA5	PA5	PA5					External Bus Interface (EBI) address and data input / output pin 14.
EBI_AD15	PA6	PA6	PA6					External Bus Interface (EBI) address and data input / output pin 15.
EBI_ALE	PF3	PC11	PC11					External Bus Interface (EBI) Address Latch Enable output.
EBI_ARDY	PF2	PF2	PF2					External Bus Interface (EBI) Hardware Ready Control input.
EBI_BL0	PF6	PF6	PF6					External Bus Interface (EBI) Byte Lane/Enable pin 0.
EBI_BL1	PF7	PF7	PF7					External Bus Interface (EBI) Byte Lane/Enable pin 1.
EBI_CS0	PD9	PD9	PD9					External Bus Interface (EBI) Chip Select output 0.
EBI_CS1	PD10	PD10	PD10					External Bus Interface (EBI) Chip Select output 1.
EBI_CS2	PD11	PD11	PD11					External Bus Interface (EBI) Chip Select output 2.
EBI_CS3	PD12	PD12	PD12					External Bus Interface (EBI) Chip Select output 3.
EBI_CSTFT	PA7	PA7	PA7					External Bus Interface (EBI) Chip Select output TFT.
EBI_DCLK	PA8	PA8	PA8					External Bus Interface (EBI) TFT Dot Clock pin.
EBI_DTEN	PA9	PA9	PA9					External Bus Interface (EBI) TFT Data Enable pin.
EBI_HSNC	PA11	PA11	PA11					External Bus Interface (EBI) TFT Horizontal Synchronization pin.
EBI_NANDREn	PC3	PC3	PC3					External Bus Interface (EBI) NAND Read Enable output.
EBI_NANDWEn	PC5	PC5	PC5					External Bus Interface (EBI) NAND Write Enable output.
EBI_REn	PF5	PF9	PF5					External Bus Interface (EBI) Read Enable output.
EBI_VSNC	PA10	PA10	PA10					External Bus Interface (EBI) TFT Vertical Synchronization pin.
EBI_WEn	PF4	PF8	PF4					External Bus Interface (EBI) Write Enable output.
ETM_TCLK	PD7	PF8	PC6	PA6				Embedded Trace Module ETM clock .
ETM_TD0	PD6	PF9	PC7	PA2				Embedded Trace Module ETM data 0.
ETM_TD1	PD3		PD3	PA3				Embedded Trace Module ETM data 1.
ETM_TD2	PD4		PD4	PA4				Embedded Trace Module ETM data 2.
ETM_TD3	PD5	PF3	PD5	PA5				Embedded Trace Module ETM data 3.
GPIO_EM4WU0	PA0							Pin can be used to wake the system up from EM4
GPIO_EM4WU1	PA6							Pin can be used to wake the system up from EM4

Alternate	LOCATION							
Functionality	0	1	2	3	4	5	6	Description
GPIO_EM4WU2	PC9							Pin can be used to wake the system up from EM4
GPIO_EM4WU3	PF1							Pin can be used to wake the system up from EM4
GPIO_EM4WU4	PF2							Pin can be used to wake the system up from EM4
GPIO_EM4WU5	PE13							Pin can be used to wake the system up from EM4
HFXTAL_N	PB14							High Frequency Crystal negative pin. Also used as external optional clock input pin.
HFXTAL_P	PB13							High Frequency Crystal positive pin.
I2C0_SCL	PA1	PD7	PC7		PC1	PF1	PE13	I2C0 Serial Clock Line input / output.
I2C0_SDA	PA0	PD6	PC6		PC0	PF0	PE12	I2C0 Serial Data input / output.
I2C1_SCL	PC5	PB12	PE1					I2C1 Serial Clock Line input / output.
I2C1_SDA	PC4	PB11	PE0					I2C1 Serial Data input / output.
LES_ALTEX0	PD6							LESENSE alternate exite output 0.
LES_ALTEX1	PD7							LESENSE alternate exite output 1.
LES_ALTEX2	PA3							LESENSE alternate exite output 2.
LES_ALTEX3	PA4							LESENSE alternate exite output 3.
LES_ALTEX4	PA5							LESENSE alternate exite output 4.
LES_ALTEX5	PE11							LESENSE alternate exite output 5.
LES_ALTEX6	PE12							LESENSE alternate exite output 6.
LES_ALTEX7	PE13							LESENSE alternate exite output 7.
LES_CH0	PC0							LESENSE channel 0.
LES_CH1	PC1							LESENSE channel 1.
LES_CH2	PC2							LESENSE channel 2.
LES_CH3	PC3							LESENSE channel 3.
LES_CH4	PC4							LESENSE channel 4.
LES_CH5	PC5							LESENSE channel 5.
LES_CH6	PC6							LESENSE channel 6.
LES_CH7	PC7							LESENSE channel 7.
LES_CH8	PC8							LESENSE channel 8.
LES_CH9	PC9							LESENSE channel 9.
LES_CH10	PC10							LESENSE channel 10.
LES_CH11	PC11							LESENSE channel 11.
LES_CH12	PC12							LESENSE channel 12.
LES_CH13	PC13							LESENSE channel 13.
LES_CH14	PC14							LESENSE channel 14.
LES_CH15	PC15							LESENSE channel 15.
LETIM0_OUT0	PD6	PB11	PF0	PC4				Low Energy Timer LETIM0, output channel 0.

Alternate	LOCATION							
Functionality	0	1	2	3	4	5	6	Description
LETIM0_OUT1	PD7	PB12	PF1	PC5				Low Energy Timer LETIM0, output channel 1.
LEU0_RX	PD5	PB14	PE15	PF1	PA0			LEUART0 Receive input.
LEU0_TX	PD4	PB13	PE14	PF0	PF2			LEUART0 Transmit output. Also used as receive input in half duplex communication.
LEU1_RX	PC7	PA6						LEUART1 Receive input.
LEU1_TX	PC6	PA5						LEUART1 Transmit output. Also used as receive input in half duplex communication.
LFXTAL_N	PB8							Low Frequency Crystal (typically 32.768 kHz) negative pin. Also used as an optional external clock input pin.
LFXTAL_P	PB7							Low Frequency Crystal (typically 32.768 kHz) positive pin.
OPAMP_N0 / DAC0_N0	PC5							Operational Amplifier 0 external negative input.
OPAMP_N1 / DAC0_N1	PD7							Operational Amplifier 1 external negative input.
OPAMP_N2	PD3							Operational Amplifier 2 external negative input.
OPAMP_OUT2	PD5	PD0						Operational Amplifier 2 output.
OPAMP_P0 / DAC0_P0	PC4							Operational Amplifier 0 external positive input.
OPAMP_P1 / DAC0_P1	PD6							Operational Amplifier 1 external positive input.
OPAMP_P2	PD4							Operational Amplifier 2 external positive input.
PCNT0_S0IN	PC13	PE0	PC0	PD6				Pulse Counter PCNT0 input number 0.
PCNT0_S1IN	PC14	PE1	PC1	PD7				Pulse Counter PCNT0 input number 1.
PCNT1_S0IN	PC4	PB3						Pulse Counter PCNT1 input number 0.
PCNT1_S1IN	PC5	PB4						Pulse Counter PCNT1 input number 1.
PCNT2_S0IN	PD0	PE8						Pulse Counter PCNT2 input number 0.
PCNT2_S1IN	PD1	PE9						Pulse Counter PCNT2 input number 1.
PRS_CH0	PA0	PF3						Peripheral Reflex System PRS, channel 0.
PRS_CH1	PA1	PF4						Peripheral Reflex System PRS, channel 1.
PRS_CH2	PC0	PF5						Peripheral Reflex System PRS, channel 2.
PRS_CH3	PC1	PE8						Peripheral Reflex System PRS, channel 3.
TIM0_CC0	PA0	PA0	PF6	PD1	PA0	PF0		Timer 0 Capture Compare input / output channel 0.
TIM0_CC1	PA1	PA1	PF7	PD2	PC0	PF1		Timer 0 Capture Compare input / output channel 1.
TIM0_CC2	PA2	PA2	PF8	PD3	PC1	PF2		Timer 0 Capture Compare input / output channel 2.
TIM0_CDTI0	PA3	PC13	PF3	PC13	PC2	PF3		Timer 0 Complimentary Dead Time Insertion channel 0.
TIM0_CDTI1	PA4	PC14	PF4	PC14	PC3	PF4		Timer 0 Complimentary Dead Time Insertion channel 1.

Alternate	LOCATION							
Functionality	0	1	2	3	4	5	6	Description
TIM0_CDTI2	PA5	PC15	PF5	PC15	PC4	PF5		Timer 0 Complimentary Dead Time Insertion channel 2.
TIM1_CC0	PC13	PE10	PB0	PB7	PD6			Timer 1 Capture Compare input / output channel 0.
TIM1_CC1	PC14	PE11	PB1	PB8	PD7			Timer 1 Capture Compare input / output channel 1.
TIM1_CC2	PC15	PE12	PB2	PB11	PC13			Timer 1 Capture Compare input / output channel 2.
TIM2_CC0	PA8	PA12	PC8					Timer 2 Capture Compare input / output channel 0.
TIM2_CC1	PA9	PA13	PC9					Timer 2 Capture Compare input / output channel 1.
TIM2_CC2	PA10	PA14	PC10					Timer 2 Capture Compare input / output channel 2.
TIM3_CC0	PE14	PE0						Timer 3 Capture Compare input / output channel 0.
TIM3_CC1	PE15	PE1						Timer 3 Capture Compare input / output channel 1.
TIM3_CC2	PA15	PE2						Timer 3 Capture Compare input / output channel 2.
U0_RX	PF7	PE1	PA4	PC15				UART0 Receive input.
U0_TX	PF6	PE0	PA3	PC14				UART0 Transmit output. Also used as receive input in half duplex communication.
U1_RX	PC13		PB10	PE3				UART1 Receive input.
U1_TX	PC12		PB9	PE2				UART1 Transmit output. Also used as receive input in half duplex communication.
US0_CLK	PE12	PE5	PC9	PC15	PB13	PB13		USART0 clock input / output.
US0_CS	PE13	PE4	PC8	PC14	PB14	PB14		USART0 chip select input / output.
US0_RX	PE11	PE6	PC10	PE12	PB8	PC1		USART0 Asynchronous Receive. USART0 Synchronous mode Main Input / Secondary Output (MISO).
US0_TX	PE10	PE7	PC11	PE13	PB7	PC0		USART0 Asynchronous Transmit.Also used as receive input in half duplex communication. USART0 Synchronous mode Main Output / Secondary Input (MOSI).
US1_CLK	PB7	PD2	PF0					USART1 clock input / output.
US1_CS	PB8	PD3	PF1					USART1 chip select input / output.
US1_RX	PC1	PD1	PD6					USART1 Asynchronous Receive. USART1 Synchronous mode Main Input / Secondary Output (MISO).
US1_TX	PC0	PD0	PD7					USART1 Asynchronous Transmit.Also used as receive input in half duplex communication. USART1 Synchronous mode Main Output / Secondary Input (MOSI).
US2_CLK	PC4	PB5						USART2 clock input / output.
US2_CS	PC5	PB6						USART2 chip select input / output.
US2_RX	PC3	PB4						USART2 Asynchronous Receive. USART2 Synchronous mode Main Input / Secondary Output (MISO).

Alternate	LOCATION							
Functionality	0	1	2	3	4	5	6	Description
US2_TX	PC2	PB3						USART2 Asynchronous Transmit.Also used as receive input in half duplex communication. USART2 Synchronous mode Main Output / Secondary Input (MOSI).

5.3.3 GPIO Pinout Overview

The specific GPIO pins available in EFM32WG280 are shown in the following table. Each GPIO port is organized as 16-bit ports indicated by letters A through F, and the individual pin on this port is indicated by a number from 15 down to 0.

Table 5.9. GPIO Pinout

Port	Pin 15	Pin 14	Pin 13	Pin 12	Pin 11	Pin 10	Pin 9	Pin 8	Pin 7	Pin 6	Pin 5	Pin 4	Pin 3	Pin 2	Pin 1	Pin 0
Port A	PA15	PA14	PA13	PA12	PA11	PA10	PA9	PA8	PA7	PA6	PA5	PA4	PA3	PA2	PA1	PA0
Port B	—	PB14	PB13	PB12	PB11	PB10	PB9	PB8	PB7	PB6	PB5	PB4	PB3	PB2	PB1	PB0
Port C	PC15	PC14	PC13	PC12	PC11	PC10	PC9	PC8	PC7	PC6	PC5	PC4	PC3	PC2	PC1	PC0
Port D	—	—	—	PD12	PD11	PD10	PD9	PD8	PD7	PD6	PD5	PD4	PD3	PD2	PD1	PD0
Port E	PE15	PE14	PE13	PE12	PE11	PE10	PE9	PE8	PE7	PE6	PE5	PE4	PE3	PE2	PE1	PE0
Port F	—	—	—	—	—	—	PF9	PF8	PF7	PF6	PF5	PF4	PF3	PF2	PF1	PF0

5.3.4 Opamp Pinout Overview

The specific opamp terminals available in EFM32WG280 is shown in the following figure.

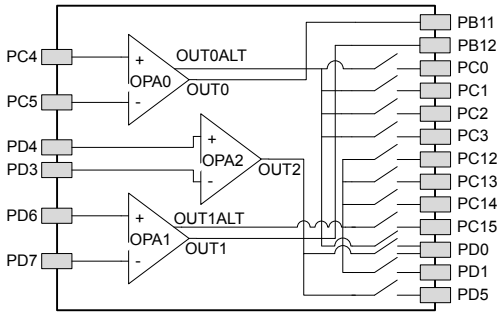

Figure 5.6. Opamp Pinout

5.4 EFM32WG290 (BGA112)

5.4.1 Pinout

The EFM32WG290 pinout is shown in the following figure and table. Alternate locations are denoted by "#" followed by the location number (Multiple locations on the same pin are split with "/"). Alternate locations can be configured in the LOCATION bitfield in the *_ROUTE register in the module in question.

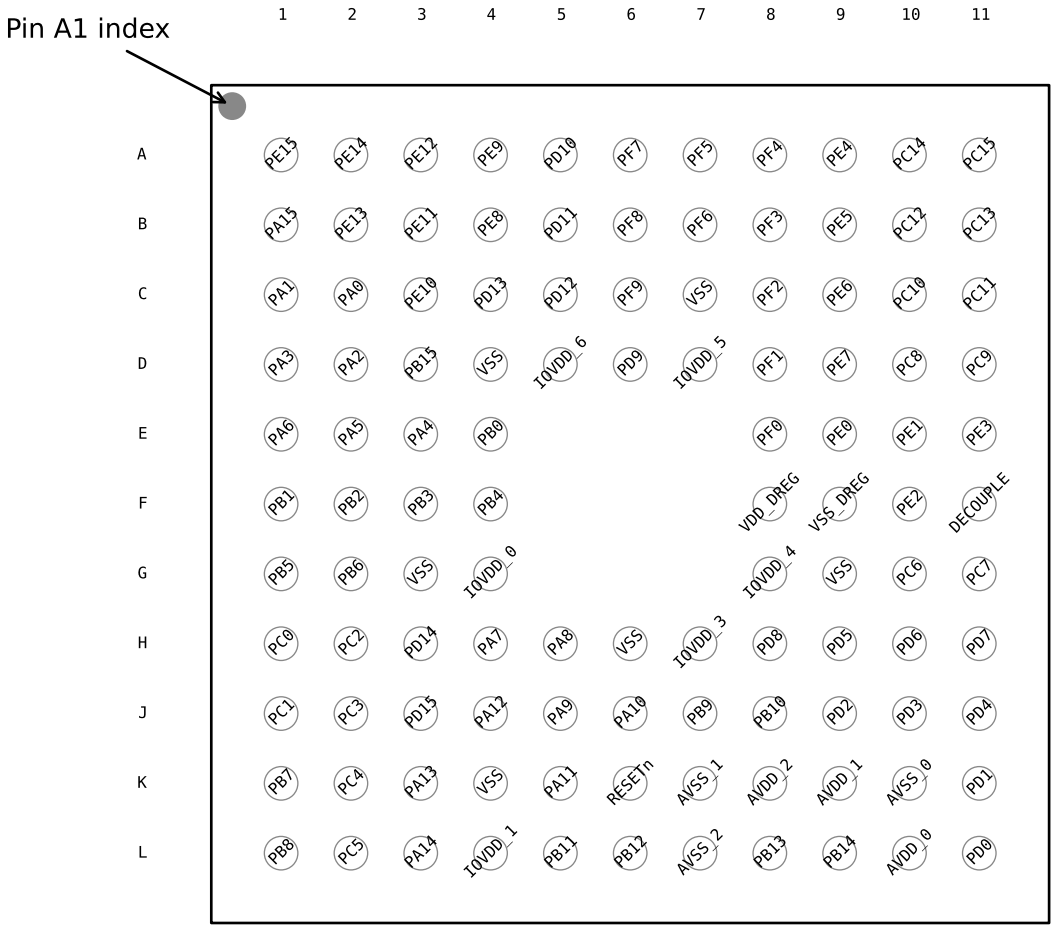

Figure 5.7. EFM32WG290 Pinout (top view, not to scale)

Table 5.10. Device Pinout

BGA112 Pin# and Name		Pin Alternate Functionality / Description				
Pin #	Pin Name	Analog	EBI	Timers	Communication	Other
A1	PE15		EBI_AD07 #0/1/2	TIM3_CC1 #0	LEU0_RX #2	
A2	PE14		EBI_AD06 #0/1/2	TIM3_CC0 #0	LEU0_TX #2	
A3	PE12		EBI_AD04 #0/1/2	TIM1_CC2 #1	US0_RX #3 US0_CLK #0 I2C0_SDA #6	CMU_CLK1 #2 LES_ALTEX6 #0

BGA112 Pin# and Name		Pin Alternate Functionality / Description				
Pin #	Pin Name	Analog	EBI	Timers	Communication	Other
A4	PE9		EBI_AD01 #0/1/2	PCNT2_S1IN #1		
A5	PD10		EBI_CS1 #0/1/2			
A6	PF7		EBI_BL1 #0/1/2	TIM0_CC1 #2	U0_RX #0	
A7	PF5		EBI_REn #0/2	TIM0_CDTI2 #2/5		PRS_CH2 #1
A8	PF4		EBI_WEn #0/2	TIM0_CDTI1 #2/5		PRS_CH1 #1
A9	PE4		EBI_A11 #0/1/2		US0_CS #1	
A10	PC14	ACMP1_CH6 DAC0_OUT1ALT #2/ OPAMP_OUT1ALT		TIM0_CDTI1 #1/3 TIM1_CC1 #0 PCNT0_S1IN #0	US0_CS #3 U0_TX #3	LES_CH14 #0
A11	PC15	ACMP1_CH7 DAC0_OUT1ALT #3/ OPAMP_OUT1ALT		TIM0_CDTI2 #1/3 TIM1_CC2 #0	US0_CLK #3 U0_RX #3	LES_CH15 #0 DBG_SWO #1
B1	PA15		EBI_AD08 #0/1/2	TIM3_CC2 #0		
B2	PE13		EBI_AD05 #0/1/2		US0_TX #3 US0_CS #0 I2C0_SCL #6	LES_ALTEX7 #0 ACMP0_O #0 GPIO_EM4WU5
B3	PE11		EBI_AD03 #0/1/2	TIM1_CC1 #1	US0_RX #0	LES_ALTEX5 #0 BOOT_RX
B4	PE8		EBI_AD00 #0/1/2	PCNT2_S0IN #1		PRS_CH3 #1
B5	PD11		EBI_CS2 #0/1/2			
B6	PF8		EBI_WEn #1	TIM0_CC2 #2		ETM_TCLK #1
B7	PF6		EBI_BL0 #0/1/2	TIM0_CC0 #2	U0_TX #0	
B8	PF3		EBI_ALE #0	TIM0_CDTI0 #2/5		PRS_CH0 #1 ETM_TD3 #1
B9	PE5		EBI_A12 #0/1/2		US0_CLK #1	
B10	PC12	ACMP1_CH4 DAC0_OUT1ALT #0/ OPAMP_OUT1ALT			U1_TX #0	CMU_CLK0 #1 LES_CH12 #0
B11	PC13	ACMP1_CH5 DAC0_OUT1ALT #1/ OPAMP_OUT1ALT		TIM0_CDTI0 #1/3 TIM1_CC0 #0 TIM1_CC2 #4 PCNT0_S0IN #0	U1_RX #0	LES_CH13 #0
C1	PA1		EBI_AD10 #0/1/2	TIM0_CC1 #0/1	I2C0_SCL #0	CMU_CLK1 #0 PRS_CH1 #0
C2	PA0		EBI_AD09 #0/1/2	TIM0_CC0 #0/1/4	LEU0_RX #4 I2C0_SDA #0	PRS_CH0 #0 GPIO_EM4WU0
C3	PE10		EBI_AD02 #0/1/2	TIM1_CC0 #1	US0_TX #0	BOOT_TX
C4	PD13					ETM_TD1 #1
C5	PD12		EBI_CS3 #0/1/2			
C6	PF9		EBI_REn #1			ETM_TD0 #1

BGA112 Pin# and Name		Pin Alternate Functionality / Description				
Pin #	Pin Name	Analog	EBI	Timers	Communication	Other
C7	VSS	Ground.				
C8	PF2		EBI_ARDY #0/1/2	TIM0_CC2 #5	LEU0_TX #4	ACMP1_O #0 DBG_SWO #0 GPIO_EM4WU4
C9	PE6		EBI_A13 #0/1/2		US0_RX #1	
C10	PC10	ACMP1_CH2	EBI_A10 #1/2	TIM2_CC2 #2	US0_RX #2	LES_CH10 #0
C11	PC11	ACMP1_CH3	EBI_ALE #1/2		US0_TX #2	LES_CH11 #0
D1	PA3		EBI_AD12 #0/1/2	TIM0_CDTI0 #0	U0_TX #2	LES_ALTEX2 #0 ETM_TD1 #3
D2	PA2		EBI_AD11 #0/1/2	TIM0_CC2 #0/1		CMU_CLK0 #0 ETM_TD0 #3
D3	PB15					ETM_TD2 #1
D4	VSS	Ground.				
D5	IOVDD_6	Digital IO power supply 6.				
D6	PD9		EBI_CS0 #0/1/2			
D7	IOVDD_5	Digital IO power supply 5.				
D8	PF1			TIM0_CC1 #5 LE-TIM0_OUT1 #2	US1_CS #2 LEU0_RX #3 I2C0_SCL #5	DBG_SWDIO #0/1/2/3 GPIO_EM4WU3
D9	PE7		EBI_A14 #0/1/2		US0_TX #1	
D10	PC8	ACMP1_CH0	EBI_A15 #0/1/2	TIM2_CC0 #2	US0_CS #2	LES_CH8 #0
D11	PC9	ACMP1_CH1	EBI_A09 #1/2	TIM2_CC1 #2	US0_CLK #2	LES_CH9 #0 GPIO_EM4WU2
E1	PA6		EBI_AD15 #0/1/2		LEU1_RX #1	ETM_TCLK #3 GPIO_EM4WU1
E2	PA5		EBI_AD14 #0/1/2	TIM0_CDTI2 #0	LEU1_TX #1	LES_ALTEX4 #0 ETM_TD3 #3
E3	PA4		EBI_AD13 #0/1/2	TIM0_CDTI1 #0	U0_RX #2	LES_ALTEX3 #0 ETM_TD2 #3
E4	PB0		EBI_A16 #0/1/2	TIM1_CC0 #2		
E8	PF0			TIM0_CC0 #5 LE-TIM0_OUT0 #2	US1_CLK #2 LEU0_TX #3 I2C0_SDA #5	DBG_SWCLK #0/1/2/3
E9	PE0		EBI_A07 #0/1/2	TIM3_CC0 #1 PCNT0_S0IN #1	U0_TX #1 I2C1_SDA #2	
E10	PE1		EBI_A08 #0/1/2	TIM3_CC1 #1 PCNT0_S1IN #1	U0_RX #1 I2C1_SCL #2	
E11	PE3	BU_STAT	EBI_A10 #0		U1_RX #3	ACMP1_O #1
F1	PB1		EBI_A17 #0/1/2	TIM1_CC1 #2		
F2	PB2		EBI_A18 #0/1/2	TIM1_CC2 #2		
F3	PB3		EBI_A19 #0/1/2	PCNT1_S0IN #1	US2_TX #1	

BGA112 Pin# and Name		Pin Alternate Functionality / Description				
Pin #	Pin Name	Analog	EBI	Timers	Communication	Other
F4	PB4		EBI_A20 #0/1/2	PCNT1_S1IN #1	US2_RX #1	
F8	VDD_DREG	Power supply for on-chip voltage regulator.				
F9	VSS_DREG	Ground for on-chip voltage regulator.				
F10	PE2	BU_VOUT	EBI_A09 #0	TIM3_CC2 #1	U1_TX #3	ACMP0_O #1
F11	DECOUPLE	Decouple output for on-chip voltage regulator. An external capacitance of size $C_{DECOUPLE}$ is required at this pin.				
G1	PB5		EBI_A21 #0/1/2		US2_CLK #1	
G2	PB6		EBI_A22 #0/1/2		US2_CS #1	
G3	VSS	Ground.				
G4	IOVDD_0	Digital IO power supply 0.				
G8	IOVDD_4	Digital IO power supply 4.				
G9	VSS	Ground.				
G10	PC6	ACMP0_CH6	EBI_A05 #0/1/2		LEU1_TX #0 I2C0_SDA #2	LES_CH6 #0 ETM_TCLK #2
G11	PC7	ACMP0_CH7	EBI_A06 #0/1/2		LEU1_RX #0 I2C0_SCL #2	LES_CH7 #0 ETM_TD0 #2
H1	PC0	ACMP0_CH0 DAC0_OUT0ALT #0/ OPAMP_OUT0ALT	EBI_A23 #0/1/2	TIM0_CC1 #4 PCNT0_S0IN #2	US0_TX #5 US1_TX #0 I2C0_SDA #4	LES_CH0 #0 PRS_CH2 #0
H2	PC2	ACMP0_CH2 DAC0_OUT0ALT #2/ OPAMP_OUT0ALT	EBI_A25 #0/1/2	TIM0_CDTI0 #4	US2_TX #0	LES_CH2 #0
H3	PD14				I2C0_SDA #3	
H4	PA7		EBI_CSTFT #0/1/2			
H5	PA8		EBI_DCLK #0/1/2	TIM2_CC0 #0		
H6	VSS	Ground.				
H7	IOVDD_3	Digital IO power supply 3.				
H8	PD8	BU_VIN				CMU_CLK1 #1
H9	PD5	ADC0_CH5 OPAMP_OUT2 #0			LEU0_RX #0	ETM_TD3 #0/2
H10	PD6	ADC0_CH6 / DAC0_P1 / OPAMP_P1		TIM1_CC0 #4 LE-TIM0_OUT0 #0 PCNT0_S0IN #3	US1_RX #2 I2C0_SDA #1	LES_ALTEX0 #0 ACMP0_O #2 ETM_TD0 #0
H11	PD7	ADC0_CH7 / DAC0_N1 / OPAMP_N1		TIM1_CC1 #4 LE-TIM0_OUT1 #0 PCNT0_S1IN #3	US1_TX #2 I2C0_SCL #1	CMU_CLK0 #2 LES_ALTEX1 #0 ACMP1_O #2 ETM_TCLK #0
J1	PC1	ACMP0_CH1 DAC0_OUT0ALT #1/ OPAMP_OUT0ALT	EBI_A24 #0/1/2	TIM0_CC2 #4 PCNT0_S1IN #2	US0_RX #5 US1_RX #0 I2C0_SCL #4	LES_CH1 #0 PRS_CH3 #0

BGA112 Pin# and Name		Pin Alternate Functionality / Description				
Pin #	Pin Name	Analog	EBI	Timers	Communication	Other
J2	PC3	ACMP0_CH3 DAC0_OUT0ALT #3/ OPAMP_OUT0ALT	EBI_NANDREn #0/1/2	TIM0_CDTI1 #4	US2_RX #0	LES_CH3 #0
J3	PD15				I2C0_SCL #3	
J4	PA12		EBI_A00 #0/1/2	TIM2_CC0 #1		
J5	PA9		EBI_DTEN #0/1/2	TIM2_CC1 #0		
J6	PA10		EBI_VSNC #0/1/2	TIM2_CC2 #0		
J7	PB9		EBI_A03 #0/1/2		U1_TX #2	
J8	PB10		EBI_A04 #0/1/2		U1_RX #2	
J9	PD2	ADC0_CH2	EBI_A27 #0/1/2	TIM0_CC1 #3	US1_CLK #1	DBG_SWO #3
J10	PD3	ADC0_CH3 OPAMP_N2		TIM0_CC2 #3	US1_CS #1	ETM_TD1 #0/2
J11	PD4	ADC0_CH4 OPAMP_P2			LEU0_TX #0	ETM_TD2 #0/2
K1	PB7	LFXTAL_P		TIM1_CC0 #3	US0_TX #4 US1_CLK #0	
K2	PC4	ACMP0_CH4 / DAC0_P0 / OPAMP_P0	EBI_A26 #0/1/2	TIM0_CDTI2 #4 LE-TIM0_OUT0 #3 PCNT1_S0IN #0	US2_CLK #0 I2C1_SDA #0	LES_CH4 #0
K3	PA13		EBI_A01 #0/1/2	TIM2_CC1 #1		
K4	VSS	Ground.				
K5	PA11		EBI_HSNC #0/1/2			
K6	RESETn	Reset input, active low. To apply an external reset source to this pin, it is required to only drive this pin low during reset, and let the internal pull-up ensure that reset is released.				
K7	AVSS_1	Analog ground 1.				
K8	AVDD_2	Analog power supply 2.				
K9	AVDD_1	Analog power supply 1.				
K10	AVSS_0	Analog ground 0.				
K11	PD1	ADC0_CH1 DAC0_OUT1ALT #4/ OPAMP_OUT1ALT		TIM0_CC0 #3 PCNT2_S1IN #0	US1_RX #1	DBG_SWO #2
L1	PB8	LFXTAL_N		TIM1_CC1 #3	US0_RX #4 US1_CS #0	
L2	PC5	ACMP0_CH5 / DAC0_N0 / OPAMP_N0	EBI_NANDWEn #0/1/2	LETIM0_OUT1 #3 PCNT1_S1IN #0	US2_CS #0 I2C1_SCL #0	LES_CH5 #0
L3	PA14		EBI_A02 #0/1/2	TIM2_CC2 #1		
L4	IOVDD_1	Digital IO power supply 1.				
L5	PB11	DAC0_OUT0 / OPAMP_OUT0		TIM1_CC2 #3 LE-TIM0_OUT0 #1	I2C1_SDA #1	

BGA112 Pin# and Name		Pin Alternate Functionality / Description				
Pin #	Pin Name	Analog	EBI	Timers	Communication	Other
L6	PB12	DAC0_OUT1 / OPAMP_OUT1		LETIM0_OUT1 #1	I2C1_SCL #1	
L7	AVSS_2	Analog ground 2.				
L8	PB13	HFXTAL_P			US0_CLK #4/5 LEU0_TX #1	
L9	PB14	HFXTAL_N			US0_CS #4/5 LEU0_RX #1	
L10	AVDD_0	Analog power supply 0.				
L11	PD0	ADC0_CH0 DAC0_OUT0ALT #4/ OPAMP_OUT0ALT OPAMP_OUT2 #1		PCNT2_S0IN #0	US1_TX #1	

5.4.2 Alternate Functionality Pinout

A wide selection of alternate functionality is available for multiplexing to various pins. This is shown in the following table. The table shows the name of the alternate functionality in the first column, followed by columns showing the possible LOCATION bitfield settings.

Note: Some functionality, such as analog interfaces, do not have alternate settings or a LOCATION bitfield. In these cases, the pinout is shown in the column corresponding to LOCATION 0.

Table 5.11. Alternate Functionality Overview

Alternate	LOCATION							
Functionality	0	1	2	3	4	5	6	Description
ACMP0_CH0	PC0							Analog comparator ACMP0, channel 0.
ACMP0_CH1	PC1							Analog comparator ACMP0, channel 1.
ACMP0_CH2	PC2							Analog comparator ACMP0, channel 2.
ACMP0_CH3	PC3							Analog comparator ACMP0, channel 3.
ACMP0_CH4	PC4							Analog comparator ACMP0, channel 4.
ACMP0_CH5	PC5							Analog comparator ACMP0, channel 5.
ACMP0_CH6	PC6							Analog comparator ACMP0, channel 6.
ACMP0_CH7	PC7							Analog comparator ACMP0, channel 7.
ACMP0_O	PE13	PE2	PD6					Analog comparator ACMP0, digital output.
ACMP1_CH0	PC8							Analog comparator ACMP1, channel 0.
ACMP1_CH1	PC9							Analog comparator ACMP1, channel 1.
ACMP1_CH2	PC10							Analog comparator ACMP1, channel 2.
ACMP1_CH3	PC11							Analog comparator ACMP1, channel 3.
ACMP1_CH4	PC12							Analog comparator ACMP1, channel 4.
ACMP1_CH5	PC13							Analog comparator ACMP1, channel 5.
ACMP1_CH6	PC14							Analog comparator ACMP1, channel 6.
ACMP1_CH7	PC15							Analog comparator ACMP1, channel 7.
ACMP1_O	PF2	PE3	PD7					Analog comparator ACMP1, digital output.
ADC0_CH0	PD0							Analog to digital converter ADC0, input channel number 0.
ADC0_CH1	PD1							Analog to digital converter ADC0, input channel number 1.
ADC0_CH2	PD2							Analog to digital converter ADC0, input channel number 2.
ADC0_CH3	PD3							Analog to digital converter ADC0, input channel number 3.
ADC0_CH4	PD4							Analog to digital converter ADC0, input channel number 4.
ADC0_CH5	PD5							Analog to digital converter ADC0, input channel number 5.
ADC0_CH6	PD6							Analog to digital converter ADC0, input channel number 6.

Alternate	LOCATION							
Functionality	0	1	2	3	4	5	6	Description
ADC0_CH7	PD7							Analog to digital converter ADC0, input channel number 7.
BOOT_RX	PE11							Bootloader RX.
BOOT_TX	PE10							Bootloader TX.
BU_STAT	PE3							Backup Power Domain status, whether or not the system is in backup mode
BU_VIN	PD8							Battery input for Backup Power Domain
BU_VOUT	PE2							Power output for Backup Power Domain
CMU_CLK0	PA2	PC12	PD7					Clock Management Unit, clock output number 0.
CMU_CLK1	PA1	PD8	PE12					Clock Management Unit, clock output number 1.
DAC0_OUT0 / OPAMP_OUT0	PB11							Digital to Analog Converter DAC0_OUT0 /OPAMP output channel number 0.
DAC0_OUT0ALT / OPAMP_OUT0ALT	PC0	PC1	PC2	PC3	PD0			Digital to Analog Converter DAC0_OUT0ALT / OPAMP alternative output for channel 0.
DAC0_OUT1 / OPAMP_OUT1	PB12							Digital to Analog Converter DAC0_OUT1 /OPAMP output channel number 1.
DAC0_OUT1ALT / OPAMP_OUT1ALT	PC12	PC13	PC14	PC15	PD1			Digital to Analog Converter DAC0_OUT1ALT / OPAMP alternative output for channel 1.
DBG_SWCLK	PF0	PF0	PF0	PF0				Debug-interface Serial Wire clock input. Note that this function is enabled to pin out of reset, and has a built-in pull down.
DBG_SWDIO	PF1	PF1	PF1	PF1				Debug-interface Serial Wire data input / output. Note that this function is enabled to pin out of reset, and has a built-in pull up.
DBG_SWO	PF2	PC15	PD1	PD2				Debug-interface Serial Wire viewer Output. Note that this function is not enabled after reset, and must be enabled by software to be used.
EBI_A00	PA12	PA12	PA12					External Bus Interface (EBI) address output pin 00.
EBI_A01	PA13	PA13	PA13					External Bus Interface (EBI) address output pin 01.
EBI_A02	PA14	PA14	PA14					External Bus Interface (EBI) address output pin 02.
EBI_A03	PB9	PB9	PB9					External Bus Interface (EBI) address output pin 03.
EBI_A04	PB10	PB10	PB10					External Bus Interface (EBI) address output pin 04.
EBI_A05	PC6	PC6	PC6					External Bus Interface (EBI) address output pin 05.
EBI_A06	PC7	PC7	PC7					External Bus Interface (EBI) address output pin 06.
EBI_A07	PE0	PE0	PE0					External Bus Interface (EBI) address output pin 07.
EBI_A08	PE1	PE1	PE1					External Bus Interface (EBI) address output pin 08.
EBI_A09	PE2	PC9	PC9					External Bus Interface (EBI) address output pin 09.
EBI_A10	PE3	PC10	PC10					External Bus Interface (EBI) address output pin 10.

Alternate	LOCATION							
Functionality	0	1	2	3	4	5	6	Description
EBI_A11	PE4	PE4	PE4					External Bus Interface (EBI) address output pin 11.
EBI_A12	PE5	PE5	PE5					External Bus Interface (EBI) address output pin 12.
EBI_A13	PE6	PE6	PE6					External Bus Interface (EBI) address output pin 13.
EBI_A14	PE7	PE7	PE7					External Bus Interface (EBI) address output pin 14.
EBI_A15	PC8	PC8	PC8					External Bus Interface (EBI) address output pin 15.
EBI_A16	PB0	PB0	PB0					External Bus Interface (EBI) address output pin 16.
EBI_A17	PB1	PB1	PB1					External Bus Interface (EBI) address output pin 17.
EBI_A18	PB2	PB2	PB2					External Bus Interface (EBI) address output pin 18.
EBI_A19	PB3	PB3	PB3					External Bus Interface (EBI) address output pin 19.
EBI_A20	PB4	PB4	PB4					External Bus Interface (EBI) address output pin 20.
EBI_A21	PB5	PB5	PB5					External Bus Interface (EBI) address output pin 21.
EBI_A22	PB6	PB6	PB6					External Bus Interface (EBI) address output pin 22.
EBI_A23	PC0	PC0	PC0					External Bus Interface (EBI) address output pin 23.
EBI_A24	PC1	PC1	PC1					External Bus Interface (EBI) address output pin 24.
EBI_A25	PC2	PC2	PC2					External Bus Interface (EBI) address output pin 25.
EBI_A26	PC4	PC4	PC4					External Bus Interface (EBI) address output pin 26.
EBI_A27	PD2	PD2	PD2					External Bus Interface (EBI) address output pin 27.
EBI_AD00	PE8	PE8	PE8					External Bus Interface (EBI) address and data input / output pin 00.
EBI_AD01	PE9	PE9	PE9					External Bus Interface (EBI) address and data input / output pin 01.
EBI_AD02	PE10	PE10	PE10					External Bus Interface (EBI) address and data input / output pin 02.
EBI_AD03	PE11	PE11	PE11					External Bus Interface (EBI) address and data input / output pin 03.
EBI_AD04	PE12	PE12	PE12					External Bus Interface (EBI) address and data input / output pin 04.
EBI_AD05	PE13	PE13	PE13					External Bus Interface (EBI) address and data input / output pin 05.
EBI_AD06	PE14	PE14	PE14					External Bus Interface (EBI) address and data input / output pin 06.
EBI_AD07	PE15	PE15	PE15					External Bus Interface (EBI) address and data input / output pin 07.
EBI_AD08	PA15	PA15	PA15					External Bus Interface (EBI) address and data input / output pin 08.
EBI_AD09	PA0	PA0	PA0					External Bus Interface (EBI) address and data input / output pin 09.
EBI_AD10	PA1	PA1	PA1					External Bus Interface (EBI) address and data input / output pin 10.
EBI_AD11	PA2	PA2	PA2					External Bus Interface (EBI) address and data input / output pin 11.

Alternate	LOCATION							
Functionality	0	1	2	3	4	5	6	Description
EBI_AD12	PA3	PA3	PA3					External Bus Interface (EBI) address and data input / output pin 12.
EBI_AD13	PA4	PA4	PA4					External Bus Interface (EBI) address and data input / output pin 13.
EBI_AD14	PA5	PA5	PA5					External Bus Interface (EBI) address and data input / output pin 14.
EBI_AD15	PA6	PA6	PA6					External Bus Interface (EBI) address and data input / output pin 15.
EBI_ALE	PF3	PC11	PC11					External Bus Interface (EBI) Address Latch Enable output.
EBI_ARDY	PF2	PF2	PF2					External Bus Interface (EBI) Hardware Ready Control input.
EBI_BL0	PF6	PF6	PF6					External Bus Interface (EBI) Byte Lane/Enable pin 0.
EBI_BL1	PF7	PF7	PF7					External Bus Interface (EBI) Byte Lane/Enable pin 1.
EBI_CS0	PD9	PD9	PD9					External Bus Interface (EBI) Chip Select output 0.
EBI_CS1	PD10	PD10	PD10					External Bus Interface (EBI) Chip Select output 1.
EBI_CS2	PD11	PD11	PD11					External Bus Interface (EBI) Chip Select output 2.
EBI_CS3	PD12	PD12	PD12					External Bus Interface (EBI) Chip Select output 3.
EBI_CSTFT	PA7	PA7	PA7					External Bus Interface (EBI) Chip Select output TFT.
EBI_DCLK	PA8	PA8	PA8					External Bus Interface (EBI) TFT Dot Clock pin.
EBI_DTEN	PA9	PA9	PA9					External Bus Interface (EBI) TFT Data Enable pin.
EBI_HSNC	PA11	PA11	PA11					External Bus Interface (EBI) TFT Horizontal Synchronization pin.
EBI_NANDREn	PC3	PC3	PC3					External Bus Interface (EBI) NAND Read Enable output.
EBI_NANDWEn	PC5	PC5	PC5					External Bus Interface (EBI) NAND Write Enable output.
EBI_REn	PF5	PF9	PF5					External Bus Interface (EBI) Read Enable output.
EBI_VSNC	PA10	PA10	PA10					External Bus Interface (EBI) TFT Vertical Synchronization pin.
EBI_WEn	PF4	PF8	PF4					External Bus Interface (EBI) Write Enable output.
ETM_TCLK	PD7	PF8	PC6	PA6				Embedded Trace Module ETM clock .
ETM_TD0	PD6	PF9	PC7	PA2				Embedded Trace Module ETM data 0.
ETM_TD1	PD3	PD13	PD3	PA3				Embedded Trace Module ETM data 1.
ETM_TD2	PD4	PB15	PD4	PA4				Embedded Trace Module ETM data 2.
ETM_TD3	PD5	PF3	PD5	PA5				Embedded Trace Module ETM data 3.
GPIO_EM4WU0	PA0							Pin can be used to wake the system up from EM4
GPIO_EM4WU1	PA6							Pin can be used to wake the system up from EM4

Alternate	LOCATION							
Functionality	0	1	2	3	4	5	6	Description
GPIO_EM4WU2	PC9							Pin can be used to wake the system up from EM4
GPIO_EM4WU3	PF1							Pin can be used to wake the system up from EM4
GPIO_EM4WU4	PF2							Pin can be used to wake the system up from EM4
GPIO_EM4WU5	PE13							Pin can be used to wake the system up from EM4
HFXTAL_N	PB14							High Frequency Crystal negative pin. Also used as external optional clock input pin.
HFXTAL_P	PB13							High Frequency Crystal positive pin.
I2C0_SCL	PA1	PD7	PC7	PD15	PC1	PF1	PE13	I2C0 Serial Clock Line input / output.
I2C0_SDA	PA0	PD6	PC6	PD14	PC0	PF0	PE12	I2C0 Serial Data input / output.
I2C1_SCL	PC5	PB12	PE1					I2C1 Serial Clock Line input / output.
I2C1_SDA	PC4	PB11	PE0					I2C1 Serial Data input / output.
LES_ALTEX0	PD6							LESENSE alternate exite output 0.
LES_ALTEX1	PD7							LESENSE alternate exite output 1.
LES_ALTEX2	PA3							LESENSE alternate exite output 2.
LES_ALTEX3	PA4							LESENSE alternate exite output 3.
LES_ALTEX4	PA5							LESENSE alternate exite output 4.
LES_ALTEX5	PE11							LESENSE alternate exite output 5.
LES_ALTEX6	PE12							LESENSE alternate exite output 6.
LES_ALTEX7	PE13							LESENSE alternate exite output 7.
LES_CH0	PC0							LESENSE channel 0.
LES_CH1	PC1							LESENSE channel 1.
LES_CH2	PC2							LESENSE channel 2.
LES_CH3	PC3							LESENSE channel 3.
LES_CH4	PC4							LESENSE channel 4.
LES_CH5	PC5							LESENSE channel 5.
LES_CH6	PC6							LESENSE channel 6.
LES_CH7	PC7							LESENSE channel 7.
LES_CH8	PC8							LESENSE channel 8.
LES_CH9	PC9							LESENSE channel 9.
LES_CH10	PC10							LESENSE channel 10.
LES_CH11	PC11							LESENSE channel 11.
LES_CH12	PC12							LESENSE channel 12.
LES_CH13	PC13							LESENSE channel 13.
LES_CH14	PC14							LESENSE channel 14.
LES_CH15	PC15							LESENSE channel 15.
LETIM0_OUT0	PD6	PB11	PF0	PC4				Low Energy Timer LETIM0, output channel 0.

Alternate	LOCATION							
Functionality	0	1	2	3	4	5	6	Description
LETIM0_OUT1	PD7	PB12	PF1	PC5				Low Energy Timer LETIM0, output channel 1.
LEU0_RX	PD5	PB14	PE15	PF1	PA0			LEUART0 Receive input.
LEU0_TX	PD4	PB13	PE14	PF0	PF2			LEUART0 Transmit output. Also used as receive input in half duplex communication.
LEU1_RX	PC7	PA6						LEUART1 Receive input.
LEU1_TX	PC6	PA5						LEUART1 Transmit output. Also used as receive input in half duplex communication.
LFXTAL_N	PB8							Low Frequency Crystal (typically 32.768 kHz) negative pin. Also used as an optional external clock input pin.
LFXTAL_P	PB7							Low Frequency Crystal (typically 32.768 kHz) positive pin.
OPAMP_N0 / DAC0_N0	PC5							Operational Amplifier 0 external negative input.
OPAMP_N1 / DAC0_N1	PD7							Operational Amplifier 1 external negative input.
OPAMP_N2	PD3							Operational Amplifier 2 external negative input.
OPAMP_OUT2	PD5	PD0						Operational Amplifier 2 output.
OPAMP_P0 / DAC0_P0	PC4							Operational Amplifier 0 external positive input.
OPAMP_P1 / DAC0_P1	PD6							Operational Amplifier 1 external positive input.
OPAMP_P2	PD4							Operational Amplifier 2 external positive input.
PCNT0_S0IN	PC13	PE0	PC0	PD6				Pulse Counter PCNT0 input number 0.
PCNT0_S1IN	PC14	PE1	PC1	PD7				Pulse Counter PCNT0 input number 1.
PCNT1_S0IN	PC4	PB3						Pulse Counter PCNT1 input number 0.
PCNT1_S1IN	PC5	PB4						Pulse Counter PCNT1 input number 1.
PCNT2_S0IN	PD0	PE8						Pulse Counter PCNT2 input number 0.
PCNT2_S1IN	PD1	PE9						Pulse Counter PCNT2 input number 1.
PRS_CH0	PA0	PF3						Peripheral Reflex System PRS, channel 0.
PRS_CH1	PA1	PF4						Peripheral Reflex System PRS, channel 1.
PRS_CH2	PC0	PF5						Peripheral Reflex System PRS, channel 2.
PRS_CH3	PC1	PE8						Peripheral Reflex System PRS, channel 3.
TIM0_CC0	PA0	PA0	PF6	PD1	PA0	PF0		Timer 0 Capture Compare input / output channel 0.
TIM0_CC1	PA1	PA1	PF7	PD2	PC0	PF1		Timer 0 Capture Compare input / output channel 1.
TIM0_CC2	PA2	PA2	PF8	PD3	PC1	PF2		Timer 0 Capture Compare input / output channel 2.
TIM0_CDTI0	PA3	PC13	PF3	PC13	PC2	PF3		Timer 0 Complimentary Dead Time Insertion channel 0.
TIM0_CDTI1	PA4	PC14	PF4	PC14	PC3	PF4		Timer 0 Complimentary Dead Time Insertion channel 1.

Alternate	LOCATION							
Functionality	0	1	2	3	4	5	6	Description
TIM0_CDTI2	PA5	PC15	PF5	PC15	PC4	PF5		Timer 0 Complimentary Dead Time Insertion channel 2.
TIM1_CC0	PC13	PE10	PB0	PB7	PD6			Timer 1 Capture Compare input / output channel 0.
TIM1_CC1	PC14	PE11	PB1	PB8	PD7			Timer 1 Capture Compare input / output channel 1.
TIM1_CC2	PC15	PE12	PB2	PB11	PC13			Timer 1 Capture Compare input / output channel 2.
TIM2_CC0	PA8	PA12	PC8					Timer 2 Capture Compare input / output channel 0.
TIM2_CC1	PA9	PA13	PC9					Timer 2 Capture Compare input / output channel 1.
TIM2_CC2	PA10	PA14	PC10					Timer 2 Capture Compare input / output channel 2.
TIM3_CC0	PE14	PE0						Timer 3 Capture Compare input / output channel 0.
TIM3_CC1	PE15	PE1						Timer 3 Capture Compare input / output channel 1.
TIM3_CC2	PA15	PE2						Timer 3 Capture Compare input / output channel 2.
U0_RX	PF7	PE1	PA4	PC15				UART0 Receive input.
U0_TX	PF6	PE0	PA3	PC14				UART0 Transmit output. Also used as receive input in half duplex communication.
U1_RX	PC13		PB10	PE3				UART1 Receive input.
U1_TX	PC12		PB9	PE2				UART1 Transmit output. Also used as receive input in half duplex communication.
US0_CLK	PE12	PE5	PC9	PC15	PB13	PB13		USART0 clock input / output.
US0_CS	PE13	PE4	PC8	PC14	PB14	PB14		USART0 chip select input / output.
US0_RX	PE11	PE6	PC10	PE12	PB8	PC1		USART0 Asynchronous Receive. USART0 Synchronous mode Main Input / Secondary Output (MISO).
US0_TX	PE10	PE7	PC11	PE13	PB7	PC0		USART0 Asynchronous Transmit.Also used as receive input in half duplex communication. USART0 Synchronous mode Main Output / Secondary Input (MOSI).
US1_CLK	PB7	PD2	PF0					USART1 clock input / output.
US1_CS	PB8	PD3	PF1					USART1 chip select input / output.
US1_RX	PC1	PD1	PD6					USART1 Asynchronous Receive. USART1 Synchronous mode Main Input / Secondary Output (MISO).
US1_TX	PC0	PD0	PD7					USART1 Asynchronous Transmit.Also used as receive input in half duplex communication. USART1 Synchronous mode Main Output / Secondary Input (MOSI).
US2_CLK	PC4	PB5						USART2 clock input / output.
US2_CS	PC5	PB6						USART2 chip select input / output.
US2_RX	PC3	PB4						USART2 Asynchronous Receive. USART2 Synchronous mode Main Input / Secondary Output (MISO).

Alternate	LOCATION							
Functionality	0	1	2	3	4	5	6	Description
US2_TX	PC2	PB3						USART2 Asynchronous Transmit.Also used as receive input in half duplex communication. USART2 Synchronous mode Main Output / Secondary Input (MOSI).

5.4.3 GPIO Pinout Overview

The specific GPIO pins available in EFM32WG290 are shown in the following table. Each GPIO port is organized as 16-bit ports indicated by letters A through F, and the individual pin on this port is indicated by a number from 15 down to 0.

Table 5.12. GPIO Pinout

Port	Pin 15	Pin 14	Pin 13	Pin 12	Pin 11	Pin 10	Pin 9	Pin 8	Pin 7	Pin 6	Pin 5	Pin 4	Pin 3	Pin 2	Pin 1	Pin 0
Port A	PA15	PA14	PA13	PA12	PA11	PA10	PA9	PA8	PA7	PA6	PA5	PA4	PA3	PA2	PA1	PA0
Port B	PB15	PB14	PB13	PB12	PB11	PB10	PB9	PB8	PB7	PB6	PB5	PB4	PB3	PB2	PB1	PB0
Port C	PC15	PC14	PC13	PC12	PC11	PC10	PC9	PC8	PC7	PC6	PC5	PC4	PC3	PC2	PC1	PC0
Port D	PD15	PD14	PD13	PD12	PD11	PD10	PD9	PD8	PD7	PD6	PD5	PD4	PD3	PD2	PD1	PD0
Port E	PE15	PE14	PE13	PE12	PE11	PE10	PE9	PE8	PE7	PE6	PE5	PE4	PE3	PE2	PE1	PE0
Port F	—	—	—	—	—	—	PF9	PF8	PF7	PF6	PF5	PF4	PF3	PF2	PF1	PF0

5.4.4 Opamp Pinout Overview

The specific opamp terminals available in EFM32WG290 is shown in the following figure.

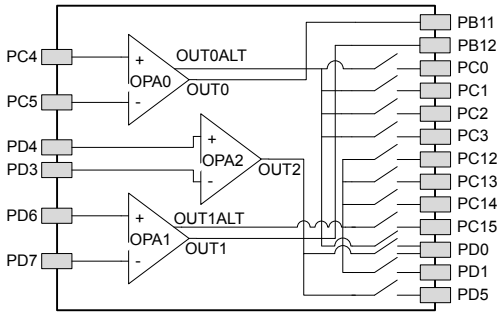

Figure 5.8. Opamp Pinout

5.5 EFM32WG295 (BGA120)

5.5.1 Pinout

The EFM32WG295 pinout is shown in the following figure and table. Alternate locations are denoted by "#" followed by the location number (Multiple locations on the same pin are split with "/"). Alternate locations can be configured in the LOCATION bitfield in the *_ROUTE register in the module in question.

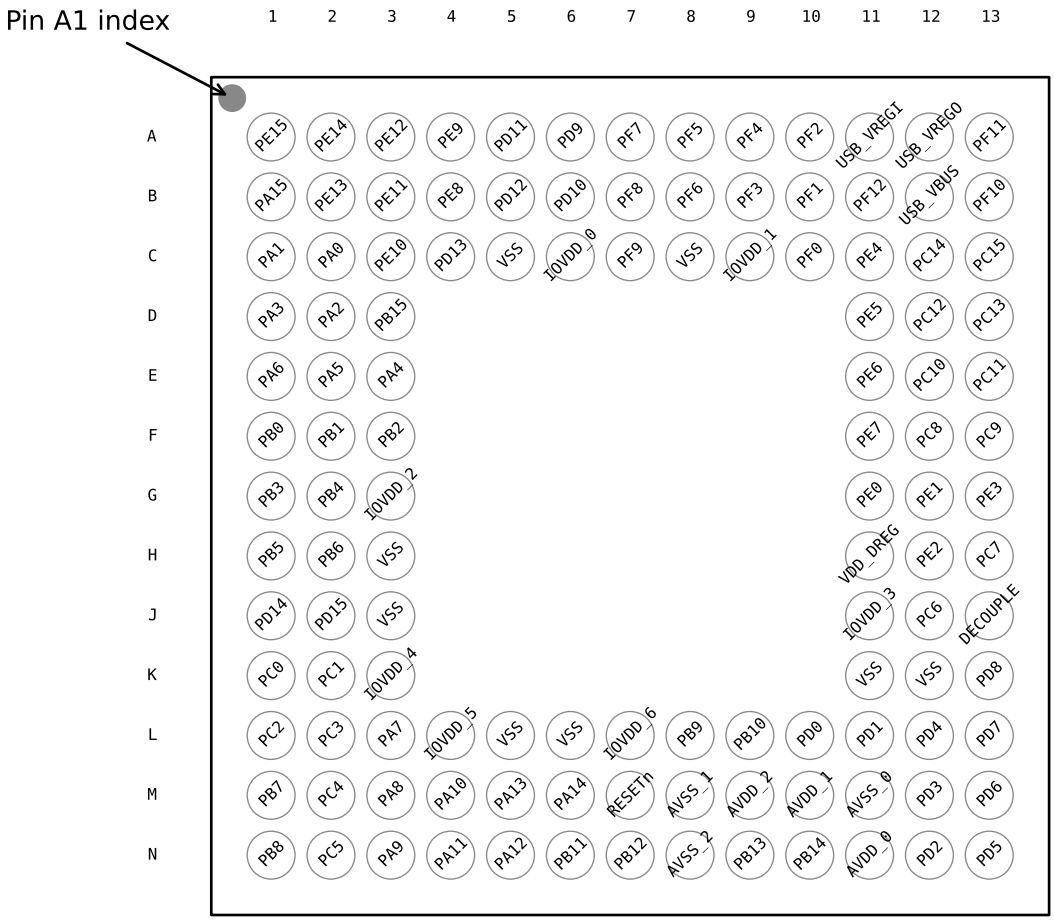

Figure 5.9. EFM32WG295 Pinout (top view, not to scale)

Table 5.13. Device Pinout

BGA120 Pin# and Name		Pin Alternate Functionality / Description				
Pin #	**Pin Name**	**Analog**	**EBI**	**Timers**	**Communication**	**Other**
A1	PE15		EBI_AD07 #0/1/2	TIM3_CC1 #0	LEU0_RX #2	
A2	PE14		EBI_AD06 #0/1/2	TIM3_CC0 #0	LEU0_TX #2	
A3	PE12		EBI_AD04 #0/1/2	TIM1_CC2 #1	US0_RX #3 US0_CLK #0 I2C0_SDA #6	CMU_CLK1 #2 LES_ALTEX6 #0

BGA120 Pin# and Name		Pin Alternate Functionality / Description				
Pin #	Pin Name	Analog	EBI	Timers	Communication	Other
A4	PE9		EBI_AD01 #0/1/2	PCNT2_S1IN #1		
A5	PD11		EBI_CS2 #0/1/2			
A6	PD9		EBI_CS0 #0/1/2			
A7	PF7		EBI_BL1 #0/1/2	TIM0_CC1 #2	U0_RX #0	
A8	PF5		EBI_REn #0/2	TIM0_CDTI2 #2/5		PRS_CH2 #1
A9	PF4		EBI_WEn #0/2	TIM0_CDTI1 #2/5		PRS_CH1 #1
A10	PF2		EBI_ARDY #0/1/2	TIM0_CC2 #5	LEU0_TX #4	ACMP1_O #0 DBG_SWO #0 GPIO_EM4WU4
A11	USB_VREGI	Input to internal 3.3V USB regulator				
A12	USB_VREGO	Output and decoupling for internal 3.3V USB regulator				
A13	PF11				U1_RX #1	
B1	PA15		EBI_AD08 #0/1/2	TIM3_CC2 #0		
B2	PE13		EBI_AD05 #0/1/2		US0_TX #3 US0_CS #0 I2C0_SCL #6	LES_ALTEX7 #0 ACMP0_O #0 GPIO_EM4WU5
B3	PE11		EBI_AD03 #0/1/2	TIM1_CC1 #1	US0_RX #0	LES_ALTEX5 #0 BOOT_RX
B4	PE8		EBI_AD00 #0/1/2	PCNT2_S0IN #1		PRS_CH3 #1
B5	PD12		EBI_CS3 #0/1/2			
B6	PD10		EBI_CS1 #0/1/2			
B7	PF8		EBI_WEn #1	TIM0_CC2 #2		ETM_TCLK #1
B8	PF6		EBI_BL0 #0/1/2	TIM0_CC0 #2	U0_TX #0	
B9	PF3		EBI_ALE #0	TIM0_CDTI0 #2/5		PRS_CH0 #1 ETM_TD3 #1
B10	PF1			TIM0_CC1 #5 LE-TIM0_OUT1 #2	US1_CS #2 LEU0_RX #3 I2C0_SCL #5	DBG_SWDIO #0/1/2/3 GPIO_EM4WU3
B11	PF12					
B12	USB_VBUS	USB 5.0 V VBUS input.				
B13	PF10				U1_TX #1	
C1	PA1		EBI_AD10 #0/1/2	TIM0_CC1 #0/1	I2C0_SCL #0	CMU_CLK1 #0 PRS_CH1 #0
C2	PA0		EBI_AD09 #0/1/2	TIM0_CC0 #0/1/4	LEU0_RX #4 I2C0_SDA #0	PRS_CH0 #0 GPIO_EM4WU0
C3	PE10		EBI_AD02 #0/1/2	TIM1_CC0 #1	US0_TX #0	BOOT_TX
C4	PD13					ETM_TD1 #1
C5	VSS	Ground.				
C6	IOVDD_0	Digital IO power supply 0.				
C7	PF9		EBI_REn #1			ETM_TD0 #1

BGA120 Pin# and Name		Pin Alternate Functionality / Description				
Pin #	Pin Name	Analog	EBI	Timers	Communication	Other
C8	VSS	Ground.				
C9	IOVDD_1	Digital IO power supply 1.				
C10	PF0			TIM0_CC0 #5 LE-TIM0_OUT0 #2	US1_CLK #2 LEU0_TX #3 I2C0_SDA #5	DBG_SWCLK #0/1/2/3
C11	PE4		EBI_A11 #0/1/2		US0_CS #1	
C12	PC14	ACMP1_CH6 DAC0_OUT1ALT #2/ OPAMP_OUT1ALT		TIM0_CDTI1 #1/3 TIM1_CC1 #0 PCNT0_S1IN #0	US0_CS #3 U0_TX #3	LES_CH14 #0
C13	PC15	ACMP1_CH7 DAC0_OUT1ALT #3/ OPAMP_OUT1ALT		TIM0_CDTI2 #1/3 TIM1_CC2 #0	US0_CLK #3 U0_RX #3	LES_CH15 #0 DBG_SWO #1
D1	PA3		EBI_AD12 #0/1/2	TIM0_CDTI0 #0	U0_TX #2	LES_ALTEX2 #0 ETM_TD1 #3
D2	PA2		EBI_AD11 #0/1/2	TIM0_CC2 #0/1		CMU_CLK0 #0 ETM_TD0 #3
D3	PB15					ETM_TD2 #1
D11	PE5		EBI_A12 #0/1/2		US0_CLK #1	
D12	PC12	ACMP1_CH4 DAC0_OUT1ALT #0/ OPAMP_OUT1ALT			U1_TX #0	CMU_CLK0 #1 LES_CH12 #0
D13	PC13	ACMP1_CH5 DAC0_OUT1ALT #1/ OPAMP_OUT1ALT		TIM0_CDTI0 #1/3 TIM1_CC0 #0 TIM1_CC2 #4 PCNT0_S0IN #0	U1_RX #0	LES_CH13 #0
E1	PA6		EBI_AD15 #0/1/2		LEU1_RX #1	ETM_TCLK #3 GPIO_EM4WU1
E2	PA5		EBI_AD14 #0/1/2	TIM0_CDTI2 #0	LEU1_TX #1	LES_ALTEX4 #0 ETM_TD3 #3
E3	PA4		EBI_AD13 #0/1/2	TIM0_CDTI1 #0	U0_RX #2	LES_ALTEX3 #0 ETM_TD2 #3
E11	PE6		EBI_A13 #0/1/2		US0_RX #1	
E12	PC10	ACMP1_CH2	EBI_A10 #1/2	TIM2_CC2 #2	US0_RX #2	LES_CH10 #0
E13	PC11	ACMP1_CH3	EBI_ALE #1/2		US0_TX #2	LES_CH11 #0
F1	PB0		EBI_A16 #0/1/2	TIM1_CC0 #2		
F2	PB1		EBI_A17 #0/1/2	TIM1_CC1 #2		
F3	PB2		EBI_A18 #0/1/2	TIM1_CC2 #2		
F11	PE7		EBI_A14 #0/1/2		US0_TX #1	
F12	PC8	ACMP1_CH0	EBI_A15 #0/1/2	TIM2_CC0 #2	US0_CS #2	LES_CH8 #0
F13	PC9	ACMP1_CH1	EBI_A09 #1/2	TIM2_CC1 #2	US0_CLK #2	LES_CH9 #0 GPIO_EM4WU2

BGA120 Pin# and Name		Pin Alternate Functionality / Description				
Pin #	Pin Name	Analog	EBI	Timers	Communication	Other
G1	PB3		EBI_A19 #0/1/2	PCNT1_S0IN #1	US2_TX #1	
G2	PB4		EBI_A20 #0/1/2	PCNT1_S1IN #1	US2_RX #1	
G3	IOVDD_2	Digital IO power supply 2.				
G11	PE0		EBI_A07 #0/1/2	TIM3_CC0 #1 PCNT0_S0IN #1	U0_TX #1 I2C1_SDA #2	
G12	PE1		EBI_A08 #0/1/2	TIM3_CC1 #1 PCNT0_S1IN #1	U0_RX #1 I2C1_SCL #2	
G13	PE3	BU_STAT	EBI_A10 #0		U1_RX #3	ACMP1_O #1
H1	PB5		EBI_A21 #0/1/2		US2_CLK #1	
H2	PB6		EBI_A22 #0/1/2		US2_CS #1	
H3	VSS	Ground.				
H11	VDD_DREG	Power supply for on-chip voltage regulator.				
H12	PE2	BU_VOUT	EBI_A09 #0	TIM3_CC2 #1	U1_TX #3	ACMP0_O #1
H13	PC7	ACMP0_CH7	EBI_A06 #0/1/2		LEU1_RX #0 I2C0_SCL #2	LES_CH7 #0 ETM_TD0 #2
J1	PD14				I2C0_SDA #3	
J2	PD15				I2C0_SCL #3	
J3	VSS	Ground.				
J11	IOVDD_3	Digital IO power supply 3.				
J12	PC6	ACMP0_CH6	EBI_A05 #0/1/2		LEU1_TX #0 I2C0_SDA #2	LES_CH6 #0 ETM_TCLK #2
J13	DECOUPLE	Decouple output for on-chip voltage regulator. An external capacitance of size $C_{DECOUPLE}$ is required at this pin.				
K1	PC0	ACMP0_CH0 DAC0_OUT0ALT #0/ OPAMP_OUT0ALT	EBI_A23 #0/1/2	TIM0_CC1 #4 PCNT0_S0IN #2	US0_TX #5 US1_TX #0 I2C0_SDA #4	LES_CH0 #0 PRS_CH2 #0
K2	PC1	ACMP0_CH1 DAC0_OUT0ALT #1/ OPAMP_OUT0ALT	EBI_A24 #0/1/2	TIM0_CC2 #4 PCNT0_S1IN #2	US0_RX #5 US1_RX #0 I2C0_SCL #4	LES_CH1 #0 PRS_CH3 #0
K3	IOVDD_4	Digital IO power supply 4.				
K11	VSS	Ground.				
K12	VSS	Ground.				
K13	PD8	BU_VIN				CMU_CLK1 #1
L1	PC2	ACMP0_CH2 DAC0_OUT0ALT #2/ OPAMP_OUT0ALT	EBI_A25 #0/1/2	TIM0_CDTI0 #4	US2_TX #0	LES_CH2 #0

BGA120 Pin# and Name		Pin Alternate Functionality / Description				
Pin #	Pin Name	Analog	EBI	Timers	Communication	Other
L2	PC3	ACMP0_CH3 DAC0_OUT0ALT #3/ OPAMP_OUT0ALT	EBI_NANDREn #0/1/2	TIM0_CDTI1 #4	US2_RX #0	LES_CH3 #0
L3	PA7		EBI_CSTFT #0/1/2			
L4	IOVDD_5	Digital IO power supply 5.				
L5	VSS	Ground.				
L6	VSS	Ground.				
L7	IOVDD_6	Digital IO power supply 6.				
L8	PB9		EBI_A03 #0/1/2		U1_TX #2	
L9	PB10		EBI_A04 #0/1/2		U1_RX #2	
L10	PD0	ADC0_CH0 DAC0_OUT0ALT #4/ OPAMP_OUT0ALT OPAMP_OUT2 #1		PCNT2_S0IN #0	US1_TX #1	
L11	PD1	ADC0_CH1 DAC0_OUT1ALT #4/ OPAMP_OUT1ALT		TIM0_CC0 #3 PCNT2_S1IN #0	US1_RX #1	DBG_SWO #2
L12	PD4	ADC0_CH4 OPAMP_P2			LEU0_TX #0	ETM_TD2 #0/2
L13	PD7	ADC0_CH7 / DAC0_N1 / OPAMP_N1		TIM1_CC1 #4 LE-TIM0_OUT1 #0 PCNT0_S1IN #3	US1_TX #2 I2C0_SCL #1	CMU_CLK0 #2 LES_ALTEX1 #0 ACMP1_O #2 ETM_TCLK #0
M1	PB7	LFXTAL_P		TIM1_CC0 #3	US0_TX #4 US1_CLK #0	
M2	PC4	ACMP0_CH4 / DAC0_P0 / OPAMP_P0	EBI_A26 #0/1/2	TIM0_CDTI2 #4 LE-TIM0_OUT0 #3 PCNT1_S0IN #0	US2_CLK #0 I2C1_SDA #0	LES_CH4 #0
M3	PA8		EBI_DCLK #0/1/2	TIM2_CC0 #0		
M4	PA10		EBI_VSNC #0/1/2	TIM2_CC2 #0		
M5	PA13		EBI_A01 #0/1/2	TIM2_CC1 #1		
M6	PA14		EBI_A02 #0/1/2	TIM2_CC2 #1		
M7	RESETn	Reset input, active low. To apply an external reset source to this pin, it is required to only drive this pin low during reset, and let the internal pull-up ensure that reset is released.				
M8	AVSS_1	Analog ground 1.				
M9	AVDD_2	Analog power supply 2.				
M10	AVDD_1	Analog power supply 1.				
M11	AVSS_0	Analog ground 0.				
M12	PD3	ADC0_CH3 OPAMP_N2		TIM0_CC2 #3	US1_CS #1	ETM_TD1 #0/2

BGA120 Pin# and Name		Pin Alternate Functionality / Description				
Pin #	Pin Name	Analog	EBI	Timers	Communication	Other
M13	PD6	ADC0_CH6 / DAC0_P1 / OPAMP_P1		TIM1_CC0 #4 LE-TIM0_OUT0 #0 PCNT0_S0IN #3	US1_RX #2 I2C0_SDA #1	LES_ALTEX0 #0 ACMP0_O #2 ETM_TD0 #0
N1	PB8	LFXTAL_N		TIM1_CC1 #3	US0_RX #4 US1_CS #0	
N2	PC5	ACMP0_CH5 / DAC0_N0 / OPAMP_N0	EBI_NANDWEn #0/1/2	LETIM0_OUT1 #3 PCNT1_S1IN #0	US2_CS #0 I2C1_SCL #0	LES_CH5 #0
N3	PA9		EBI_DTEN #0/1/2	TIM2_CC1 #0		
N4	PA11		EBI_HSNC #0/1/2			
N5	PA12		EBI_A00 #0/1/2	TIM2_CC0 #1		
N6	PB11	DAC0_OUT0 / OPAMP_OUT0		TIM1_CC2 #3 LE-TIM0_OUT0 #1	I2C1_SDA #1	
N7	PB12	DAC0_OUT1 / OPAMP_OUT1		LETIM0_OUT1 #1	I2C1_SCL #1	
N8	AVSS_2	Analog ground 2.				
N9	PB13	HFXTAL_P			US0_CLK #4/5 LEU0_TX #1	
N10	PB14	HFXTAL_N			US0_CS #4/5 LEU0_RX #1	
N11	AVDD_0	Analog power supply 0.				
N12	PD2	ADC0_CH2	EBI_A27 #0/1/2	TIM0_CC1 #3	US1_CLK #1	DBG_SWO #3
N13	PD5	ADC0_CH5 OPAMP_OUT2 #0			LEU0_RX #0	ETM_TD3 #0/2

5.5.2 Alternate Functionality Pinout

A wide selection of alternate functionality is available for multiplexing to various pins. This is shown in the following table. The table shows the name of the alternate functionality in the first column, followed by columns showing the possible LOCATION bitfield settings.

Note: Some functionality, such as analog interfaces, do not have alternate settings or a LOCATION bitfield. In these cases, the pinout is shown in the column corresponding to LOCATION 0.

Table 5.14. Alternate Functionality Overview

Alternate	LOCATION							
Functionality	0	1	2	3	4	5	6	Description
ACMP0_CH0	PC0							Analog comparator ACMP0, channel 0.
ACMP0_CH1	PC1							Analog comparator ACMP0, channel 1.
ACMP0_CH2	PC2							Analog comparator ACMP0, channel 2.
ACMP0_CH3	PC3							Analog comparator ACMP0, channel 3.
ACMP0_CH4	PC4							Analog comparator ACMP0, channel 4.
ACMP0_CH5	PC5							Analog comparator ACMP0, channel 5.
ACMP0_CH6	PC6							Analog comparator ACMP0, channel 6.
ACMP0_CH7	PC7							Analog comparator ACMP0, channel 7.
ACMP0_O	PE13	PE2	PD6					Analog comparator ACMP0, digital output.
ACMP1_CH0	PC8							Analog comparator ACMP1, channel 0.
ACMP1_CH1	PC9							Analog comparator ACMP1, channel 1.
ACMP1_CH2	PC10							Analog comparator ACMP1, channel 2.
ACMP1_CH3	PC11							Analog comparator ACMP1, channel 3.
ACMP1_CH4	PC12							Analog comparator ACMP1, channel 4.
ACMP1_CH5	PC13							Analog comparator ACMP1, channel 5.
ACMP1_CH6	PC14							Analog comparator ACMP1, channel 6.
ACMP1_CH7	PC15							Analog comparator ACMP1, channel 7.
ACMP1_O	PF2	PE3	PD7					Analog comparator ACMP1, digital output.
ADC0_CH0	PD0							Analog to digital converter ADC0, input channel number 0.
ADC0_CH1	PD1							Analog to digital converter ADC0, input channel number 1.
ADC0_CH2	PD2							Analog to digital converter ADC0, input channel number 2.
ADC0_CH3	PD3							Analog to digital converter ADC0, input channel number 3.
ADC0_CH4	PD4							Analog to digital converter ADC0, input channel number 4.
ADC0_CH5	PD5							Analog to digital converter ADC0, input channel number 5.
ADC0_CH6	PD6							Analog to digital converter ADC0, input channel number 6.

Alternate	LOCATION							
Functionality	0	1	2	3	4	5	6	Description
ADC0_CH7	PD7							Analog to digital converter ADC0, input channel number 7.
BOOT_RX	PE11							Bootloader RX.
BOOT_TX	PE10							Bootloader TX.
BU_STAT	PE3							Backup Power Domain status, whether or not the system is in backup mode
BU_VIN	PD8							Battery input for Backup Power Domain
BU_VOUT	PE2							Power output for Backup Power Domain
CMU_CLK0	PA2	PC12	PD7					Clock Management Unit, clock output number 0.
CMU_CLK1	PA1	PD8	PE12					Clock Management Unit, clock output number 1.
OPAMP_N0 / DAC0_N0	PC5							Operational Amplifier 0 external negative input.
OPAMP_N1 / DAC0_N1	PD7							Operational Amplifier 1 external negative input.
OPAMP_N2	PD3							Operational Amplifier 2 external negative input.
DAC0_OUT0 / OPAMP_OUT0	PB11							Digital to Analog Converter DAC0_OUT0 /OPAMP output channel number 0.
DAC0_OUT0ALT / OPAMP_OUT0ALT	PC0	PC1	PC2	PC3	PD0			Digital to Analog Converter DAC0_OUT0ALT / OPAMP alternative output for channel 0.
DAC0_OUT1 / OPAMP_OUT1	PB12							Digital to Analog Converter DAC0_OUT1 / OPAMP output channel number 1.
DAC0_OUT1ALT / OPAMP_OUT1ALT	PC12	PC13	PC14	PC15	PD1			Digital to Analog Converter DAC0_OUT1ALT / OPAMP alternative output for channel 1.
OPAMP_OUT2	PD5	PD0						Operational Amplifier 2 output.
OPAMP_P0 / DAC0_P0	PC4							Operational Amplifier 0 external positive input.
OPAMP_P1 / DAC0_P1	PD6							Operational Amplifier 1 external positive input.
OPAMP_P2	PD4							Operational Amplifier 2 external positive input.
DBG_SWCLK	PF0	PF0	PF0	PF0				Debug-interface Serial Wire clock input. Note that this function is enabled to pin out of reset, and has a built-in pull down.
DBG_SWDIO	PF1	PF1	PF1	PF1				Debug-interface Serial Wire data input / output. Note that this function is enabled to pin out of reset, and has a built-in pull up.
DBG_SWO	PF2	PC15	PD1	PD2				Debug-interface Serial Wire viewer Output. Note that this function is not enabled after reset, and must be enabled by software to be used.
EBI_A00	PA12	PA12	PA12					External Bus Interface (EBI) address output pin 00.
EBI_A01	PA13	PA13	PA13					External Bus Interface (EBI) address output pin 01.
EBI_A02	PA14	PA14	PA14					External Bus Interface (EBI) address output pin 02.

Alternate	LOCATION							
Functionality	0	1	2	3	4	5	6	Description
EBI_A03	PB9	PB9	PB9					External Bus Interface (EBI) address output pin 03.
EBI_A04	PB10	PB10	PB10					External Bus Interface (EBI) address output pin 04.
EBI_A05	PC6	PC6	PC6					External Bus Interface (EBI) address output pin 05.
EBI_A06	PC7	PC7	PC7					External Bus Interface (EBI) address output pin 06.
EBI_A07	PE0	PE0	PE0					External Bus Interface (EBI) address output pin 07.
EBI_A08	PE1	PE1	PE1					External Bus Interface (EBI) address output pin 08.
EBI_A09	PE2	PC9	PC9					External Bus Interface (EBI) address output pin 09.
EBI_A10	PE3	PC10	PC10					External Bus Interface (EBI) address output pin 10.
EBI_A11	PE4	PE4	PE4					External Bus Interface (EBI) address output pin 11.
EBI_A12	PE5	PE5	PE5					External Bus Interface (EBI) address output pin 12.
EBI_A13	PE6	PE6	PE6					External Bus Interface (EBI) address output pin 13.
EBI_A14	PE7	PE7	PE7					External Bus Interface (EBI) address output pin 14.
EBI_A15	PC8	PC8	PC8					External Bus Interface (EBI) address output pin 15.
EBI_A16	PB0	PB0	PB0					External Bus Interface (EBI) address output pin 16.
EBI_A17	PB1	PB1	PB1					External Bus Interface (EBI) address output pin 17.
EBI_A18	PB2	PB2	PB2					External Bus Interface (EBI) address output pin 18.
EBI_A19	PB3	PB3	PB3					External Bus Interface (EBI) address output pin 19.
EBI_A20	PB4	PB4	PB4					External Bus Interface (EBI) address output pin 20.
EBI_A21	PB5	PB5	PB5					External Bus Interface (EBI) address output pin 21.
EBI_A22	PB6	PB6	PB6					External Bus Interface (EBI) address output pin 22.
EBI_A23	PC0	PC0	PC0					External Bus Interface (EBI) address output pin 23.
EBI_A24	PC1	PC1	PC1					External Bus Interface (EBI) address output pin 24.
EBI_A25	PC2	PC2	PC2					External Bus Interface (EBI) address output pin 25.
EBI_A26	PC4	PC4	PC4					External Bus Interface (EBI) address output pin 26.
EBI_A27	PD2	PD2	PD2					External Bus Interface (EBI) address output pin 27.
EBI_AD00	PE8	PE8	PE8					External Bus Interface (EBI) address and data input / output pin 00.
EBI_AD01	PE9	PE9	PE9					External Bus Interface (EBI) address and data input / output pin 01.
EBI_AD02	PE10	PE10	PE10					External Bus Interface (EBI) address and data input / output pin 02.
EBI_AD03	PE11	PE11	PE11					External Bus Interface (EBI) address and data input / output pin 03.
EBI_AD04	PE12	PE12	PE12					External Bus Interface (EBI) address and data input / output pin 04.
EBI_AD05	PE13	PE13	PE13					External Bus Interface (EBI) address and data input / output pin 05.
EBI_AD06	PE14	PE14	PE14					External Bus Interface (EBI) address and data input / output pin 06.

Alternate	LOCATION							
Functionality	0	1	2	3	4	5	6	Description
EBI_AD07	PE15	PE15	PE15					External Bus Interface (EBI) address and data input / output pin 07.
EBI_AD08	PA15	PA15	PA15					External Bus Interface (EBI) address and data input / output pin 08.
EBI_AD09	PA0	PA0	PA0					External Bus Interface (EBI) address and data input / output pin 09.
EBI_AD10	PA1	PA1	PA1					External Bus Interface (EBI) address and data input / output pin 10.
EBI_AD11	PA2	PA2	PA2					External Bus Interface (EBI) address and data input / output pin 11.
EBI_AD12	PA3	PA3	PA3					External Bus Interface (EBI) address and data input / output pin 12.
EBI_AD13	PA4	PA4	PA4					External Bus Interface (EBI) address and data input / output pin 13.
EBI_AD14	PA5	PA5	PA5					External Bus Interface (EBI) address and data input / output pin 14.
EBI_AD15	PA6	PA6	PA6					External Bus Interface (EBI) address and data input / output pin 15.
EBI_ALE	PF3	PC11	PC11					External Bus Interface (EBI) Address Latch Enable output.
EBI_ARDY	PF2	PF2	PF2					External Bus Interface (EBI) Hardware Ready Control input.
EBI_BL0	PF6	PF6	PF6					External Bus Interface (EBI) Byte Lane/Enable pin 0.
EBI_BL1	PF7	PF7	PF7					External Bus Interface (EBI) Byte Lane/Enable pin 1.
EBI_CS0	PD9	PD9	PD9					External Bus Interface (EBI) Chip Select output 0.
EBI_CS1	PD10	PD10	PD10					External Bus Interface (EBI) Chip Select output 1.
EBI_CS2	PD11	PD11	PD11					External Bus Interface (EBI) Chip Select output 2.
EBI_CS3	PD12	PD12	PD12					External Bus Interface (EBI) Chip Select output 3.
EBI_CSTFT	PA7	PA7	PA7					External Bus Interface (EBI) Chip Select output TFT.
EBI_DCLK	PA8	PA8	PA8					External Bus Interface (EBI) TFT Dot Clock pin.
EBI_DTEN	PA9	PA9	PA9					External Bus Interface (EBI) TFT Data Enable pin.
EBI_HSNC	PA11	PA11	PA11					External Bus Interface (EBI) TFT Horizontal Synchronization pin.
EBI_NANDREn	PC3	PC3	PC3					External Bus Interface (EBI) NAND Read Enable output.
EBI_NANDWEn	PC5	PC5	PC5					External Bus Interface (EBI) NAND Write Enable output.
EBI_REn	PF5	PF9	PF5					External Bus Interface (EBI) Read Enable output.
EBI_VSNC	PA10	PA10	PA10					External Bus Interface (EBI) TFT Vertical Synchronization pin.

Alternate	LOCATION							
Functionality	0	1	2	3	4	5	6	Description
EBI_WEn	PF4	PF8	PF4					External Bus Interface (EBI) Write Enable output.
ETM_TCLK	PD7	PF8	PC6	PA6				Embedded Trace Module ETM clock .
ETM_TD0	PD6	PF9	PC7	PA2				Embedded Trace Module ETM data 0.
ETM_TD1	PD3	PD13	PD3	PA3				Embedded Trace Module ETM data 1.
ETM_TD2	PD4	PB15	PD4	PA4				Embedded Trace Module ETM data 2.
ETM_TD3	PD5	PF3	PD5	PA5				Embedded Trace Module ETM data 3.
GPIO_EM4WU0	PA0							Pin can be used to wake the system up from EM4
GPIO_EM4WU1	PA6							Pin can be used to wake the system up from EM4
GPIO_EM4WU2	PC9							Pin can be used to wake the system up from EM4
GPIO_EM4WU3	PF1							Pin can be used to wake the system up from EM4
GPIO_EM4WU4	PF2							Pin can be used to wake the system up from EM4
GPIO_EM4WU5	PE13							Pin can be used to wake the system up from EM4
HFXTAL_N	PB14							High Frequency Crystal negative pin. Also used as external optional clock input pin.
HFXTAL_P	PB13							High Frequency Crystal positive pin.
I2C0_SCL	PA1	PD7	PC7	PD15	PC1	PF1	PE13	I2C0 Serial Clock Line input / output.
I2C0_SDA	PA0	PD6	PC6	PD14	PC0	PF0	PE12	I2C0 Serial Data input / output.
I2C1_SCL	PC5	PB12	PE1					I2C1 Serial Clock Line input / output.
I2C1_SDA	PC4	PB11	PE0					I2C1 Serial Data input / output.
LES_ALTEX0	PD6							LESENSE alternate exite output 0.
LES_ALTEX1	PD7							LESENSE alternate exite output 1.
LES_ALTEX2	PA3							LESENSE alternate exite output 2.
LES_ALTEX3	PA4							LESENSE alternate exite output 3.
LES_ALTEX4	PA5							LESENSE alternate exite output 4.
LES_ALTEX5	PE11							LESENSE alternate exite output 5.
LES_ALTEX6	PE12							LESENSE alternate exite output 6.
LES_ALTEX7	PE13							LESENSE alternate exite output 7.
LES_CH0	PC0							LESENSE channel 0.
LES_CH1	PC1							LESENSE channel 1.
LES_CH2	PC2							LESENSE channel 2.
LES_CH3	PC3							LESENSE channel 3.
LES_CH4	PC4							LESENSE channel 4.
LES_CH5	PC5							LESENSE channel 5.
LES_CH6	PC6							LESENSE channel 6.
LES_CH7	PC7							LESENSE channel 7.
LES_CH8	PC8							LESENSE channel 8.

Alternate	LOCATION							
Functionality	0	1	2	3	4	5	6	Description
LES_CH9	PC9							LESENSE channel 9.
LES_CH10	PC10							LESENSE channel 10.
LES_CH11	PC11							LESENSE channel 11.
LES_CH12	PC12							LESENSE channel 12.
LES_CH13	PC13							LESENSE channel 13.
LES_CH14	PC14							LESENSE channel 14.
LES_CH15	PC15							LESENSE channel 15.
LETIM0_OUT0	PD6	PB11	PF0	PC4				Low Energy Timer LETIM0, output channel 0.
LETIM0_OUT1	PD7	PB12	PF1	PC5				Low Energy Timer LETIM0, output channel 1.
LEU0_RX	PD5	PB14	PE15	PF1	PA0			LEUART0 Receive input.
LEU0_TX	PD4	PB13	PE14	PF0	PF2			LEUART0 Transmit output. Also used as receive input in half duplex communication.
LEU1_RX	PC7	PA6						LEUART1 Receive input.
LEU1_TX	PC6	PA5						LEUART1 Transmit output. Also used as receive input in half duplex communication.
LFXTAL_N	PB8							Low Frequency Crystal (typically 32.768 kHz) negative pin. Also used as an optional external clock input pin.
LFXTAL_P	PB7							Low Frequency Crystal (typically 32.768 kHz) positive pin.
PCNT0_S0IN	PC13	PE0	PC0	PD6				Pulse Counter PCNT0 input number 0.
PCNT0_S1IN	PC14	PE1	PC1	PD7				Pulse Counter PCNT0 input number 1.
PCNT1_S0IN	PC4	PB3						Pulse Counter PCNT1 input number 0.
PCNT1_S1IN	PC5	PB4						Pulse Counter PCNT1 input number 1.
PCNT2_S0IN	PD0	PE8						Pulse Counter PCNT2 input number 0.
PCNT2_S1IN	PD1	PE9						Pulse Counter PCNT2 input number 1.
PRS_CH0	PA0	PF3						Peripheral Reflex System PRS, channel 0.
PRS_CH1	PA1	PF4						Peripheral Reflex System PRS, channel 1.
PRS_CH2	PC0	PF5						Peripheral Reflex System PRS, channel 2.
PRS_CH3	PC1	PE8						Peripheral Reflex System PRS, channel 3.
TIM0_CC0	PA0	PA0	PF6	PD1	PA0	PF0		Timer 0 Capture Compare input / output channel 0.
TIM0_CC1	PA1	PA1	PF7	PD2	PC0	PF1		Timer 0 Capture Compare input / output channel 1.
TIM0_CC2	PA2	PA2	PF8	PD3	PC1	PF2		Timer 0 Capture Compare input / output channel 2.
TIM0_CDTI0	PA3	PC13	PF3	PC13	PC2	PF3		Timer 0 Complimentary Dead Time Insertion channel 0.
TIM0_CDTI1	PA4	PC14	PF4	PC14	PC3	PF4		Timer 0 Complimentary Dead Time Insertion channel 1.
TIM0_CDTI2	PA5	PC15	PF5	PC15	PC4	PF5		Timer 0 Complimentary Dead Time Insertion channel 2.

Alternate	LOCATION							
Functionality	0	1	2	3	4	5	6	Description
TIM1_CC0	PC13	PE10	PB0	PB7	PD6			Timer 1 Capture Compare input / output channel 0.
TIM1_CC1	PC14	PE11	PB1	PB8	PD7			Timer 1 Capture Compare input / output channel 1.
TIM1_CC2	PC15	PE12	PB2	PB11	PC13			Timer 1 Capture Compare input / output channel 2.
TIM2_CC0	PA8	PA12	PC8					Timer 2 Capture Compare input / output channel 0.
TIM2_CC1	PA9	PA13	PC9					Timer 2 Capture Compare input / output channel 1.
TIM2_CC2	PA10	PA14	PC10					Timer 2 Capture Compare input / output channel 2.
TIM3_CC0	PE14	PE0						Timer 3 Capture Compare input / output channel 0.
TIM3_CC1	PE15	PE1						Timer 3 Capture Compare input / output channel 1.
TIM3_CC2	PA15	PE2						Timer 3 Capture Compare input / output channel 2.
U0_RX	PF7	PE1	PA4	PC15				UART0 Receive input.
U0_TX	PF6	PE0	PA3	PC14				UART0 Transmit output. Also used as receive input in half duplex communication.
U1_RX	PC13	PF11	PB10	PE3				UART1 Receive input.
U1_TX	PC12	PF10	PB9	PE2				UART1 Transmit output. Also used as receive input in half duplex communication.
US0_CLK	PE12	PE5	PC9	PC15	PB13	PB13		USART0 clock input / output.
US0_CS	PE13	PE4	PC8	PC14	PB14	PB14		USART0 chip select input / output.
US0_RX	PE11	PE6	PC10	PE12	PB8	PC1		USART0 Asynchronous Receive. USART0 Synchronous mode Main Input / Secondary Output (MISO).
US0_TX	PE10	PE7	PC11	PE13	PB7	PC0		USART0 Asynchronous Transmit.Also used as receive input in half duplex communication. USART0 Synchronous mode Main Output / Secondary Input (MOSI).
US1_CLK	PB7	PD2	PF0					USART1 clock input / output.
US1_CS	PB8	PD3	PF1					USART1 chip select input / output.
US1_RX	PC1	PD1	PD6					USART1 Asynchronous Receive. USART1 Synchronous mode Main Input / Secondary Output (MISO).
US1_TX	PC0	PD0	PD7					USART1 Asynchronous Transmit.Also used as receive input in half duplex communication. USART1 Synchronous mode Main Output / Secondary Input (MOSI).
US2_CLK	PC4	PB5						USART2 clock input / output.
US2_CS	PC5	PB6						USART2 chip select input / output.
US2_RX	PC3	PB4						USART2 Asynchronous Receive. USART2 Synchronous mode Main Input / Secondary Output (MISO).

Alternate	LOCATION							
Functionality	0	1	2	3	4	5	6	Description
US2_TX	PC2	PB3						USART2 Asynchronous Transmit.Also used as receive input in half duplex communication. USART2 Synchronous mode Main Output / Secondary Input (MOSI).

5.5.3 GPIO Pinout Overview

The specific GPIO pins available in EFM32WG295 are shown in the following table. Each GPIO port is organized as 16-bit ports indicated by letters A through F, and the individual pin on this port is indicated by a number from 15 down to 0.

Table 5.15. GPIO Pinout

Port	Pin 15	Pin 14	Pin 13	Pin 12	Pin 11	Pin 10	Pin 9	Pin 8	Pin 7	Pin 6	Pin 5	Pin 4	Pin 3	Pin 2	Pin 1	Pin 0
Port A	PA15	PA14	PA13	PA12	PA11	PA10	PA9	PA8	PA7	PA6	PA5	PA4	PA3	PA2	PA1	PA0
Port B	PB15	PB14	PB13	PB12	PB11	PB10	PB9	PB8	PB7	PB6	PB5	PB4	PB3	PB2	PB1	PB0
Port C	PC15	PC14	PC13	PC12	PC11	PC10	PC9	PC8	PC7	PC6	PC5	PC4	PC3	PC2	PC1	PC0
Port D	PD15	PD14	PD13	PD12	PD11	PD10	PD9	PD8	PD7	PD6	PD5	PD4	PD3	PD2	PD1	PD0
Port E	PE15	PE14	PE13	PE12	PE11	PE10	PE9	PE8	PE7	PE6	PE5	PE4	PE3	PE2	PE1	PE0
Port F	—	—	—	PF12	PF11	PF10	PF9	PF8	PF7	PF6	PF5	PF4	PF3	PF2	PF1	PF0

5.5.4 Opamp Pinout Overview

The specific opamp terminals available in EFM32WG295 is shown in the following figure.

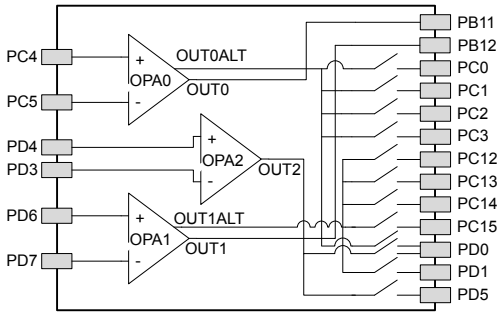

Figure 5.10. Opamp Pinout

5.6 EFM32WG330 (QFN64)

5.6.1 Pinout

The EFM32WG330 pinout is shown in the following figure and table. Alternate locations are denoted by "#" followed by the location number (Multiple locations on the same pin are split with "/"). Alternate locations can be configured in the LOCATION bitfield in the *_ROUTE register in the module in question.

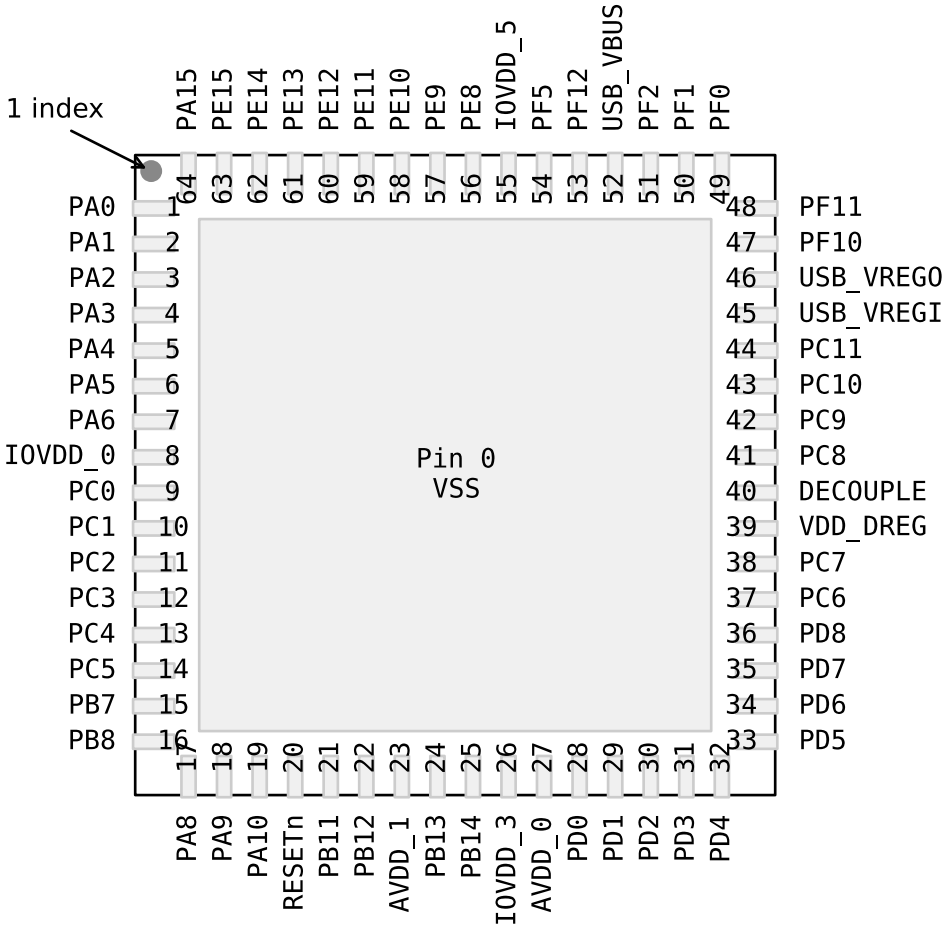

Figure 5.11. EFM32WG330 Pinout (top view, not to scale)

Table 5.16. Device Pinout

QFN64 Pin# and Name		Pin Alternate Functionality / Description			
Pin #	**Pin Name**	**Analog**	**Timers**	**Communication**	**Other**
0	VSS	Ground.			
1	PA0		TIM0_CC0 #0/1/4	LEU0_RX #4 I2C0_SDA #0	PRS_CH0 #0 GPIO_EM4WU0
2	PA1		TIM0_CC1 #0/1	I2C0_SCL #0	CMU_CLK1 #0 PRS_CH1 #0

QFN64 Pin# and Name		Pin Alternate Functionality / Description			
Pin #	Pin Name	Analog	Timers	Communication	Other
3	PA2		TIM0_CC2 #0/1		CMU_CLK0 #0 ETM_TD0 #3
4	PA3		TIM0_CDTI0 #0		LES_ALTEX2 #0 ETM_TD1 #3
5	PA4		TIM0_CDTI1 #0		LES_ALTEX3 #0 ETM_TD2 #3
6	PA5		TIM0_CDTI2 #0	LEU1_TX #1	LES_ALTEX4 #0 ETM_TD3 #3
7	PA6			LEU1_RX #1	ETM_TCLK #3 GPIO_EM4WU1
8	IOVDD_0	Digital IO power supply 0.			
9	PC0	ACMP0_CH0 DAC0_OUT0ALT #0/ OPAMP_OUT0ALT	TIM0_CC1 #4 PCNT0_S0IN #2	US0_TX #5 US1_TX #0 I2C0_SDA #4	LES_CH0 #0 PRS_CH2 #0
10	PC1	ACMP0_CH1 DAC0_OUT0ALT #1/ OPAMP_OUT0ALT	TIM0_CC2 #4 PCNT0_S1IN #2	US0_RX #5 US1_RX #0 I2C0_SCL #4	LES_CH1 #0 PRS_CH3 #0
11	PC2	ACMP0_CH2 DAC0_OUT0ALT #2/ OPAMP_OUT0ALT	TIM0_CDTI0 #4	US2_TX #0	LES_CH2 #0
12	PC3	ACMP0_CH3 DAC0_OUT0ALT #3/ OPAMP_OUT0ALT	TIM0_CDTI1 #4	US2_RX #0	LES_CH3 #0
13	PC4	ACMP0_CH4 / DAC0_P0 / OPAMP_P0	TIM0_CDTI2 #4 LE-TIM0_OUT0 #3 PCNT1_S0IN #0	US2_CLK #0 I2C1_SDA #0	LES_CH4 #0
14	PC5	ACMP0_CH5 / DAC0_N0 / OPAMP_N0	LETIM0_OUT1 #3 PCNT1_S1IN #0	US2_CS #0 I2C1_SCL #0	LES_CH5 #0
15	PB7	LFXTAL_P	TIM1_CC0 #3	US0_TX #4 US1_CLK #0	
16	PB8	LFXTAL_N	TIM1_CC1 #3	US0_RX #4 US1_CS #0	
17	PA8		TIM2_CC0 #0		
18	PA9		TIM2_CC1 #0		
19	PA10		TIM2_CC2 #0		
20	RESETn	Reset input, active low. To apply an external reset source to this pin, it is required to only drive this pin low during reset, and let the internal pull-up ensure that reset is released.			
21	PB11	DAC0_OUT0 / OPAMP_OUT0	TIM1_CC2 #3 LE-TIM0_OUT0 #1	I2C1_SDA #1	
22	PB12	DAC0_OUT1 / OPAMP_OUT1	LETIM0_OUT1 #1	I2C1_SCL #1	
23	AVDD_1	Analog power supply 1.			
24	PB13	HFXTAL_P		US0_CLK #4/5 LEU0_TX #1	
25	PB14	HFXTAL_N		US0_CS #4/5 LEU0_RX #1	

QFN64 Pin# and Name		Pin Alternate Functionality / Description			
Pin #	Pin Name	Analog	Timers	Communication	Other
26	IOVDD_3	Digital IO power supply 3.			
27	AVDD_0	Analog power supply 0.			
28	PD0	ADC0_CH0 DAC0_OUT0ALT #4/ OPAMP_OUT0ALT OPAMP_OUT2 #1	PCNT2_S0IN #0	US1_TX #1	
29	PD1	ADC0_CH1 DAC0_OUT1ALT #4/ OPAMP_OUT1ALT	TIM0_CC0 #3 PCNT2_S1IN #0	US1_RX #1	DBG_SWO #2
30	PD2	ADC0_CH2	TIM0_CC1 #3	USB_DMPU #0 US1_CLK #1	DBG_SWO #3
31	PD3	ADC0_CH3 OPAMP_N2	TIM0_CC2 #3	US1_CS #1	ETM_TD1 #0/2
32	PD4	ADC0_CH4 OPAMP_P2		LEU0_TX #0	ETM_TD2 #0/2
33	PD5	ADC0_CH5 OPAMP_OUT2 #0		LEU0_RX #0	ETM_TD3 #0/2
34	PD6	ADC0_CH6 / DAC0_P1 / OPAMP_P1	TIM1_CC0 #4 LE-TIM0_OUT0 #0 PCNT0_S0IN #3	US1_RX #2 I2C0_SDA #1	LES_ALTEX0 #0 ACMP0_O #2 ETM_TD0 #0
35	PD7	ADC0_CH7 / DAC0_N1 / OPAMP_N1	TIM1_CC1 #4 LE-TIM0_OUT1 #0 PCNT0_S1IN #3	US1_TX #2 I2C0_SCL #1	CMU_CLK0 #2 LES_ALTEX1 #0 ACMP1_O #2 ETM_TCLK #0
36	PD8	BU_VIN			CMU_CLK1 #1
37	PC6	ACMP0_CH6		LEU1_TX #0 I2C0_SDA #2	LES_CH6 #0 ETM_TCLK #2
38	PC7	ACMP0_CH7		LEU1_RX #0 I2C0_SCL #2	LES_CH7 #0 ETM_TD0 #2
39	VDD_DREG	Power supply for on-chip voltage regulator.			
40	DECOUPLE	Decouple output for on-chip voltage regulator. An external capacitance of size $C_{DECOUPLE}$ is required at this pin.			
41	PC8	ACMP1_CH0	TIM2_CC0 #2	US0_CS #2	LES_CH8 #0
42	PC9	ACMP1_CH1	TIM2_CC1 #2	US0_CLK #2	LES_CH9 #0 GPIO_EM4WU2
43	PC10	ACMP1_CH2	TIM2_CC2 #2	US0_RX #2	LES_CH10 #0
44	PC11	ACMP1_CH3		US0_TX #2	LES_CH11 #0
45	USB_VREGI	Input to internal 3.3V USB regulator			
46	USB_VREGO	Output and decoupling for internal 3.3V USB regulator			
47	PF10			USB_DM	
48	PF11			USB_DP	
49	PF0		TIM0_CC0 #5 LE-TIM0_OUT0 #2	US1_CLK #2 LEU0_TX #3 I2C0_SDA #5	DBG_SWCLK #0/1/2/3
50	PF1		TIM0_CC1 #5 LE-TIM0_OUT1 #2	US1_CS #2 LEU0_RX #3 I2C0_SCL #5	DBG_SWDIO #0/1/2/3 GPIO_EM4WU3

QFN64 Pin# and Name		Pin Alternate Functionality / Description			
Pin #	Pin Name	Analog	Timers	Communication	Other
51	PF2		TIM0_CC2 #5	LEU0_TX #4	ACMP1_O #0 DBG_SWO #0 GPIO_EM4WU4
52	USB_VBUS	USB 5.0 V VBUS input.			
53	PF12			USB_ID	
54	PF5		TIM0_CDTI2 #2/5	USB_VBUSEN #0	PRS_CH2 #1
55	IOVDD_5	Digital IO power supply 5.			
56	PE8		PCNT2_S0IN #1		PRS_CH3 #1
57	PE9		PCNT2_S1IN #1		
58	PE10		TIM1_CC0 #1	US0_TX #0	BOOT_TX
59	PE11		TIM1_CC1 #1	US0_RX #0	LES_ALTEX5 #0 BOOT_RX
60	PE12		TIM1_CC2 #1	US0_RX #3 US0_CLK #0 I2C0_SDA #6	CMU_CLK1 #2 LES_ALTEX6 #0
61	PE13			US0_TX #3 US0_CS #0 I2C0_SCL #6	LES_ALTEX7 #0 ACMP0_O #0 GPIO_EM4WU5
62	PE14		TIM3_CC0 #0	LEU0_TX #2	
63	PE15		TIM3_CC1 #0	LEU0_RX #2	
64	PA15		TIM3_CC2 #0		

5.6.2 Alternate Functionality Pinout

A wide selection of alternate functionality is available for multiplexing to various pins. This is shown in the following table. The table shows the name of the alternate functionality in the first column, followed by columns showing the possible LOCATION bitfield settings.

Note: Some functionality, such as analog interfaces, do not have alternate settings or a LOCATION bitfield. In these cases, the pinout is shown in the column corresponding to LOCATION 0.

Table 5.17. Alternate Functionality Overview

Alternate	LOCATION							
Functionality	0	1	2	3	4	5	6	Description
ACMP0_CH0	PC0							Analog comparator ACMP0, channel 0.
ACMP0_CH1	PC1							Analog comparator ACMP0, channel 1.
ACMP0_CH2	PC2							Analog comparator ACMP0, channel 2.
ACMP0_CH3	PC3							Analog comparator ACMP0, channel 3.
ACMP0_CH4	PC4							Analog comparator ACMP0, channel 4.
ACMP0_CH5	PC5							Analog comparator ACMP0, channel 5.
ACMP0_CH6	PC6							Analog comparator ACMP0, channel 6.
ACMP0_CH7	PC7							Analog comparator ACMP0, channel 7.
ACMP0_O	PE13		PD6					Analog comparator ACMP0, digital output.
ACMP1_CH0	PC8							Analog comparator ACMP1, channel 0.
ACMP1_CH1	PC9							Analog comparator ACMP1, channel 1.
ACMP1_CH2	PC10							Analog comparator ACMP1, channel 2.
ACMP1_CH3	PC11							Analog comparator ACMP1, channel 3.
ACMP1_O	PF2		PD7					Analog comparator ACMP1, digital output.
ADC0_CH0	PD0							Analog to digital converter ADC0, input channel number 0.
ADC0_CH1	PD1							Analog to digital converter ADC0, input channel number 1.
ADC0_CH2	PD2							Analog to digital converter ADC0, input channel number 2.
ADC0_CH3	PD3							Analog to digital converter ADC0, input channel number 3.
ADC0_CH4	PD4							Analog to digital converter ADC0, input channel number 4.
ADC0_CH5	PD5							Analog to digital converter ADC0, input channel number 5.
ADC0_CH6	PD6							Analog to digital converter ADC0, input channel number 6.
ADC0_CH7	PD7							Analog to digital converter ADC0, input channel number 7.
BOOT_RX	PE11							Bootloader RX.
BOOT_TX	PE10							Bootloader TX.
BU_VIN	PD8							Battery input for Backup Power Domain

Alternate	LOCATION							
Functionality	0	1	2	3	4	5	6	Description
CMU_CLK0	PA2		PD7					Clock Management Unit, clock output number 0.
CMU_CLK1	PA1	PD8	PE12					Clock Management Unit, clock output number 1.
DAC0_OUT0 / OPAMP_OUT0	PB11							Digital to Analog Converter DAC0_OUT0 /OPAMP output channel number 0.
DAC0_OUT0ALT / OPAMP_OUT0ALT	PC0	PC1	PC2	PC3	PD0			Digital to Analog Converter DAC0_OUT0ALT / OPAMP alternative output for channel 0.
DAC0_OUT1 / OPAMP_OUT1	PB12							Digital to Analog Converter DAC0_OUT1 /OPAMP output channel number 1.
DAC0_OUT1ALT / OPAMP_OUT1ALT					PD1			Digital to Analog Converter DAC0_OUT1ALT / OPAMP alternative output for channel 1.
DBG_SWCLK	PF0	PF0	PF0	PF0				Debug-interface Serial Wire clock input. Note that this function is enabled to pin out of reset, and has a built-in pull down.
DBG_SWDIO	PF1	PF1	PF1	PF1				Debug-interface Serial Wire data input / output. Note that this function is enabled to pin out of reset, and has a built-in pull up.
DBG_SWO	PF2		PD1	PD2				Debug-interface Serial Wire viewer Output. Note that this function is not enabled after reset, and must be enabled by software to be used.
ETM_TCLK	PD7		PC6	PA6				Embedded Trace Module ETM clock .
ETM_TD0	PD6		PC7	PA2				Embedded Trace Module ETM data 0.
ETM_TD1	PD3		PD3	PA3				Embedded Trace Module ETM data 1.
ETM_TD2	PD4		PD4	PA4				Embedded Trace Module ETM data 2.
ETM_TD3	PD5		PD5	PA5				Embedded Trace Module ETM data 3.
GPIO_EM4WU0	PA0							Pin can be used to wake the system up from EM4
GPIO_EM4WU1	PA6							Pin can be used to wake the system up from EM4
GPIO_EM4WU2	PC9							Pin can be used to wake the system up from EM4
GPIO_EM4WU3	PF1							Pin can be used to wake the system up from EM4
GPIO_EM4WU4	PF2							Pin can be used to wake the system up from EM4
GPIO_EM4WU5	PE13							Pin can be used to wake the system up from EM4
HFXTAL_N	PB14							High Frequency Crystal negative pin. Also used as external optional clock input pin.
HFXTAL_P	PB13							High Frequency Crystal positive pin.
I2C0_SCL	PA1	PD7	PC7		PC1	PF1	PE13	I2C0 Serial Clock Line input / output.
I2C0_SDA	PA0	PD6	PC6		PC0	PF0	PE12	I2C0 Serial Data input / output.
I2C1_SCL	PC5	PB12						I2C1 Serial Clock Line input / output.
I2C1_SDA	PC4	PB11						I2C1 Serial Data input / output.
LES_ALTEX0	PD6							LESENSE alternate exite output 0.

Alternate	LOCATION							
Functionality	0	1	2	3	4	5	6	Description
LES_ALTEX1	PD7							LESENSE alternate exite output 1.
LES_ALTEX2	PA3							LESENSE alternate exite output 2.
LES_ALTEX3	PA4							LESENSE alternate exite output 3.
LES_ALTEX4	PA5							LESENSE alternate exite output 4.
LES_ALTEX5	PE11							LESENSE alternate exite output 5.
LES_ALTEX6	PE12							LESENSE alternate exite output 6.
LES_ALTEX7	PE13							LESENSE alternate exite output 7.
LES_CH0	PC0							LESENSE channel 0.
LES_CH1	PC1							LESENSE channel 1.
LES_CH2	PC2							LESENSE channel 2.
LES_CH3	PC3							LESENSE channel 3.
LES_CH4	PC4							LESENSE channel 4.
LES_CH5	PC5							LESENSE channel 5.
LES_CH6	PC6							LESENSE channel 6.
LES_CH7	PC7							LESENSE channel 7.
LES_CH8	PC8							LESENSE channel 8.
LES_CH9	PC9							LESENSE channel 9.
LES_CH10	PC10							LESENSE channel 10.
LES_CH11	PC11							LESENSE channel 11.
LETIM0_OUT0	PD6	PB11	PF0	PC4				Low Energy Timer LETIM0, output channel 0.
LETIM0_OUT1	PD7	PB12	PF1	PC5				Low Energy Timer LETIM0, output channel 1.
LEU0_RX	PD5	PB14	PE15	PF1	PA0			LEUART0 Receive input.
LEU0_TX	PD4	PB13	PE14	PF0	PF2			LEUART0 Transmit output. Also used as receive input in half duplex communication.
LEU1_RX	PC7	PA6						LEUART1 Receive input.
LEU1_TX	PC6	PA5						LEUART1 Transmit output. Also used as receive input in half duplex communication.
LFXTAL_N	PB8							Low Frequency Crystal (typically 32.768 kHz) negative pin. Also used as an optional external clock input pin.
LFXTAL_P	PB7							Low Frequency Crystal (typically 32.768 kHz) positive pin.
OPAMP_N0 / DAC0_N0	PC5							Operational Amplifier 0 external negative input.
OPAMP_N1 / DAC0_N1	PD7							Operational Amplifier 1 external negative input.
OPAMP_N2	PD3							Operational Amplifier 2 external negative input.
OPAMP_OUT2	PD5	PD0						Operational Amplifier 2 output.

Alternate	LOCATION							
Functionality	0	1	2	3	4	5	6	Description
OPAMP_P0 / DAC0_P0	PC4							Operational Amplifier 0 external positive input.
OPAMP_P1 / DAC0_P1	PD6							Operational Amplifier 1 external positive input.
OPAMP_P2	PD4							Operational Amplifier 2 external positive input.
PCNT0_S0IN			PC0	PD6				Pulse Counter PCNT0 input number 0.
PCNT0_S1IN			PC1	PD7				Pulse Counter PCNT0 input number 1.
PCNT1_S0IN	PC4							Pulse Counter PCNT1 input number 0.
PCNT1_S1IN	PC5							Pulse Counter PCNT1 input number 1.
PCNT2_S0IN	PD0	PE8						Pulse Counter PCNT2 input number 0.
PCNT2_S1IN	PD1	PE9						Pulse Counter PCNT2 input number 1.
PRS_CH0	PA0							Peripheral Reflex System PRS, channel 0.
PRS_CH1	PA1							Peripheral Reflex System PRS, channel 1.
PRS_CH2	PC0	PF5						Peripheral Reflex System PRS, channel 2.
PRS_CH3	PC1	PE8						Peripheral Reflex System PRS, channel 3.
TIM0_CC0	PA0	PA0		PD1	PA0	PF0		Timer 0 Capture Compare input / output channel 0.
TIM0_CC1	PA1	PA1		PD2	PC0	PF1		Timer 0 Capture Compare input / output channel 1.
TIM0_CC2	PA2	PA2		PD3	PC1	PF2		Timer 0 Capture Compare input / output channel 2.
TIM0_CDTI0	PA3				PC2			Timer 0 Complimentary Dead Time Insertion channel 0.
TIM0_CDTI1	PA4				PC3			Timer 0 Complimentary Dead Time Insertion channel 1.
TIM0_CDTI2	PA5		PF5		PC4	PF5		Timer 0 Complimentary Dead Time Insertion channel 2.
TIM1_CC0		PE10		PB7	PD6			Timer 1 Capture Compare input / output channel 0.
TIM1_CC1		PE11		PB8	PD7			Timer 1 Capture Compare input / output channel 1.
TIM1_CC2		PE12		PB11				Timer 1 Capture Compare input / output channel 2.
TIM2_CC0	PA8		PC8					Timer 2 Capture Compare input / output channel 0.
TIM2_CC1	PA9		PC9					Timer 2 Capture Compare input / output channel 1.
TIM2_CC2	PA10		PC10					Timer 2 Capture Compare input / output channel 2.
TIM3_CC0	PE14							Timer 3 Capture Compare input / output channel 0.
TIM3_CC1	PE15							Timer 3 Capture Compare input / output channel 1.
TIM3_CC2	PA15							Timer 3 Capture Compare input / output channel 2.
US0_CLK	PE12		PC9		PB13	PB13		USART0 clock input / output.
US0_CS	PE13		PC8		PB14	PB14		USART0 chip select input / output.
US0_RX	PE11		PC10	PE12	PB8	PC1		USART0 Asynchronous Receive. USART0 Synchronous mode Main Input / Secondary Output (MISO).

Alternate	LOCATION							
Functionality	0	1	2	3	4	5	6	Description
US0_TX	PE10		PC11	PE13	PB7	PC0		USART0 Asynchronous Transmit.Also used as receive input in half duplex communication. USART0 Synchronous mode Main Output / Secondary Input (MOSI).
US1_CLK	PB7	PD2	PF0					USART1 clock input / output.
US1_CS	PB8	PD3	PF1					USART1 chip select input / output.
US1_RX	PC1	PD1	PD6					USART1 Asynchronous Receive. USART1 Synchronous mode Main Input / Secondary Output (MISO).
US1_TX	PC0	PD0	PD7					USART1 Asynchronous Transmit.Also used as receive input in half duplex communication. USART1 Synchronous mode Main Output / Secondary Input (MOSI).
US2_CLK	PC4							USART2 clock input / output.
US2_CS	PC5							USART2 chip select input / output.
US2_RX	PC3							USART2 Asynchronous Receive. USART2 Synchronous mode Main Input / Secondary Output (MISO).
US2_TX	PC2							USART2 Asynchronous Transmit.Also used as receive input in half duplex communication. USART2 Synchronous mode Main Output / Secondary Input (MOSI).
USB_DM	PF10							USB D- pin.
USB_DMPU	PD2							USB D- Pullup control.
USB_DP	PF11							USB D+ pin.
USB_ID	PF12							USB ID pin. Used in OTG mode.
USB_VBUS	USB_VBUS							USB 5 V VBUS input.
USB_VBUSEN	PF5							USB 5 V VBUS enable.
USB_VREGI	USB_VREGI							USB Input to internal 3.3 V regulator
USB_VREGO	USB_VREGO							USB Decoupling for internal 3.3 V USB regulator and regulator output

5.6.3 GPIO Pinout Overview

The specific GPIO pins available in EFM32WG330 are shown in the following table. Each GPIO port is organized as 16-bit ports indicated by letters A through F, and the individual pin on this port is indicated by a number from 15 down to 0.

Table 5.18. GPIO Pinout

Port	Pin 15	Pin 14	Pin 13	Pin 12	Pin 11	Pin 10	Pin 9	Pin 8	Pin 7	Pin 6	Pin 5	Pin 4	Pin 3	Pin 2	Pin 1	Pin 0
Port A	PA15	—	—	—	—	PA10	PA9	PA8	—	PA6	PA5	PA4	PA3	PA2	PA1	PA0
Port B	—	PB14	PB13	PB12	PB11	—	—	PB8	PB7	—	—	—	—	—	—	—
Port C	—	—	—	—	PC11	PC10	PC9	PC8	PC7	PC6	PC5	PC4	PC3	PC2	PC1	PC0
Port D	—	—	—	—	—	—	—	PD8	PD7	PD6	PD5	PD4	PD3	PD2	PD1	PD0
Port E	PE15	PE14	PE13	PE12	PE11	PE10	PE9	PE8	—	—	—	—	—	—	—	—
Port F	—	—	—	PF12	PF11	PF10	—	—	—	—	PF5	—	—	PF2	PF1	PF0

5.6.4 Opamp Pinout Overview

The specific opamp terminals available in EFM32WG330 is shown in the following figure.

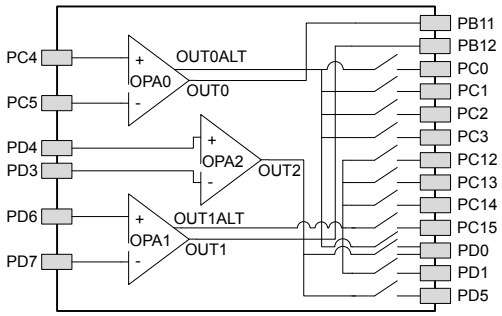

Figure 5.12. Opamp Pinout

5.7 EFM32WG332 (TQFP64)

5.7.1 Pinout

The EFM32WG332 pinout is shown in the following figure and table. Alternate locations are denoted by "#" followed by the location number (Multiple locations on the same pin are split with "/"). Alternate locations can be configured in the LOCATION bitfield in the *_ROUTE register in the module in question.

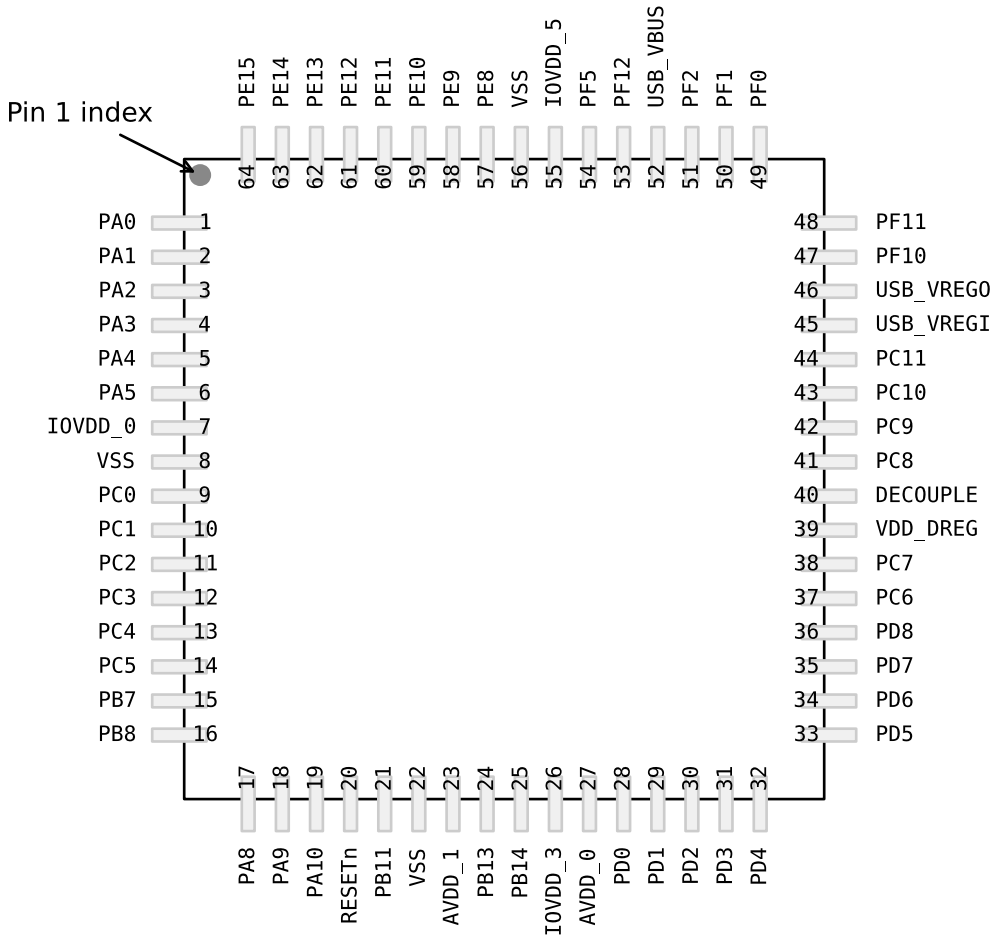

Figure 5.13. EFM32WG332 Pinout (top view, not to scale)

Table 5.19. Device Pinout

QFP64 Pin# and Name		Pin Alternate Functionality / Description			
Pin #	**Pin Name**	**Analog**	**Timers**	**Communication**	**Other**
1	PA0		TIM0_CC0 #0/1/4	LEU0_RX #4 I2C0_SDA #0	PRS_CH0 #0 GPIO_EM4WU0
2	PA1		TIM0_CC1 #0/1	I2C0_SCL #0	CMU_CLK1 #0 PRS_CH1 #0
3	PA2		TIM0_CC2 #0/1		CMU_CLK0 #0 ETM_TD0 #3

QFP64 Pin# and Name		Pin Alternate Functionality / Description			
Pin #	Pin Name	Analog	Timers	Communication	Other
4	PA3		TIM0_CDTI0 #0		LES_ALTEX2 #0 ETM_TD1 #3
5	PA4		TIM0_CDTI1 #0		LES_ALTEX3 #0 ETM_TD2 #3
6	PA5		TIM0_CDTI2 #0	LEU1_TX #1	LES_ALTEX4 #0 ETM_TD3 #3
7	IOVDD_0	Digital IO power supply 0.			
8	VSS	Ground.			
9	PC0	ACMP0_CH0 DAC0_OUT0ALT #0/ OPAMP_OUT0ALT	TIM0_CC1 #4 PCNT0_S0IN #2	US0_TX #5 US1_TX #0 I2C0_SDA #4	LES_CH0 #0 PRS_CH2 #0
10	PC1	ACMP0_CH1 DAC0_OUT0ALT #1/ OPAMP_OUT0ALT	TIM0_CC2 #4 PCNT0_S1IN #2	US0_RX #5 US1_RX #0 I2C0_SCL #4	LES_CH1 #0 PRS_CH3 #0
11	PC2	ACMP0_CH2 DAC0_OUT0ALT #2/ OPAMP_OUT0ALT	TIM0_CDTI0 #4	US2_TX #0	LES_CH2 #0
12	PC3	ACMP0_CH3 DAC0_OUT0ALT #3/ OPAMP_OUT0ALT	TIM0_CDTI1 #4	US2_RX #0	LES_CH3 #0
13	PC4	ACMP0_CH4 / DAC0_P0 / OPAMP_P0	TIM0_CDTI2 #4 LE-TIM0_OUT0 #3 PCNT1_S0IN #0	US2_CLK #0 I2C1_SDA #0	LES_CH4 #0
14	PC5	ACMP0_CH5 / DAC0_N0 / OPAMP_N0	LETIM0_OUT1 #3 PCNT1_S1IN #0	US2_CS #0 I2C1_SCL #0	LES_CH5 #0
15	PB7	LFXTAL_P	TIM1_CC0 #3	US0_TX #4 US1_CLK #0	
16	PB8	LFXTAL_N	TIM1_CC1 #3	US0_RX #4 US1_CS #0	
17	PA8		TIM2_CC0 #0		
18	PA9		TIM2_CC1 #0		
19	PA10		TIM2_CC2 #0		
20	RESETn	Reset input, active low. To apply an external reset source to this pin, it is required to only drive this pin low during reset, and let the internal pull-up ensure that reset is released.			
21	PB11	DAC0_OUT0 / OPAMP_OUT0	TIM1_CC2 #3 LE-TIM0_OUT0 #1	I2C1_SDA #1	
22	VSS	Ground.			
23	AVDD_1	Analog power supply 1.			
24	PB13	HFXTAL_P		US0_CLK #4/5 LEU0_TX #1	
25	PB14	HFXTAL_N		US0_CS #4/5 LEU0_RX #1	
26	IOVDD_3	Digital IO power supply 3.			
27	AVDD_0	Analog power supply 0.			

QFP64 Pin# and Name		Pin Alternate Functionality / Description			
Pin #	Pin Name	Analog	Timers	Communication	Other
28	PD0	ADC0_CH0 DAC0_OUT0ALT #4/ OPAMP_OUT0ALT OPAMP_OUT2 #1	PCNT2_S0IN #0	US1_TX #1	
29	PD1	ADC0_CH1 DAC0_OUT1ALT #4/ OPAMP_OUT1ALT	TIM0_CC0 #3 PCNT2_S1IN #0	US1_RX #1	DBG_SWO #2
30	PD2	ADC0_CH2	TIM0_CC1 #3	USB_DMPU #0 US1_CLK #1	DBG_SWO #3
31	PD3	ADC0_CH3 OPAMP_N2	TIM0_CC2 #3	US1_CS #1	ETM_TD1 #0/2
32	PD4	ADC0_CH4 OPAMP_P2		LEU0_TX #0	ETM_TD2 #0/2
33	PD5	ADC0_CH5 OPAMP_OUT2 #0		LEU0_RX #0	ETM_TD3 #0/2
34	PD6	ADC0_CH6 / DAC0_P1 / OPAMP_P1	TIM1_CC0 #4 LE-TIM0_OUT0 #0 PCNT0_S0IN #3	US1_RX #2 I2C0_SDA #1	LES_ALTEX0 #0 ACMP0_O #2 ETM_TD0 #0
35	PD7	ADC0_CH7 / DAC0_N1 / OPAMP_N1	TIM1_CC1 #4 LE-TIM0_OUT1 #0 PCNT0_S1IN #3	US1_TX #2 I2C0_SCL #1	CMU_CLK0 #2 LES_ALTEX1 #0 ACMP1_O #2 ETM_TCLK #0
36	PD8	BU_VIN			CMU_CLK1 #1
37	PC6	ACMP0_CH6		LEU1_TX #0 I2C0_SDA #2	LES_CH6 #0 ETM_TCLK #2
38	PC7	ACMP0_CH7		LEU1_RX #0 I2C0_SCL #2	LES_CH7 #0 ETM_TD0 #2
39	VDD_DREG	Power supply for on-chip voltage regulator.			
40	DECOUPLE	Decouple output for on-chip voltage regulator. An external capacitance of size $C_{DECOUPLE}$ is required at this pin.			
41	PC8	ACMP1_CH0	TIM2_CC0 #2	US0_CS #2	LES_CH8 #0
42	PC9	ACMP1_CH1	TIM2_CC1 #2	US0_CLK #2	LES_CH9 #0 GPIO_EM4WU2
43	PC10	ACMP1_CH2	TIM2_CC2 #2	US0_RX #2	LES_CH10 #0
44	PC11	ACMP1_CH3		US0_TX #2	LES_CH11 #0
45	USB_VREGI	Input to internal 3.3V USB regulator			
46	USB_VREGO	Output and decoupling for internal 3.3V USB regulator			
47	PF10			USB_DM	
48	PF11			USB_DP	
49	PF0		TIM0_CC0 #5 LE-TIM0_OUT0 #2	US1_CLK #2 LEU0_TX #3 I2C0_SDA #5	DBG_SWCLK #0/1/2/3
50	PF1		TIM0_CC1 #5 LE-TIM0_OUT1 #2	US1_CS #2 LEU0_RX #3 I2C0_SCL #5	DBG_SWDIO #0/1/2/3 GPIO_EM4WU3
51	PF2		TIM0_CC2 #5	LEU0_TX #4	ACMP1_O #0 DBG_SWO #0 GPIO_EM4WU4

QFP64 Pin# and Name		Pin Alternate Functionality / Description			
Pin #	Pin Name	Analog	Timers	Communication	Other
52	USB_VBUS	USB 5.0 V VBUS input.			
53	PF12			USB_ID	
54	PF5		TIM0_CDTI2 #2/5	USB_VBUSEN #0	PRS_CH2 #1
55	IOVDD_5	Digital IO power supply 5.			
56	VSS	Ground.			
57	PE8		PCNT2_S0IN #1		PRS_CH3 #1
58	PE9		PCNT2_S1IN #1		
59	PE10		TIM1_CC0 #1	US0_TX #0	BOOT_TX
60	PE11		TIM1_CC1 #1	US0_RX #0	LES_ALTEX5 #0 BOOT_RX
61	PE12		TIM1_CC2 #1	US0_RX #3 US0_CLK #0 I2C0_SDA #6	CMU_CLK1 #2 LES_ALTEX6 #0
62	PE13			US0_TX #3 US0_CS #0 I2C0_SCL #6	LES_ALTEX7 #0 ACMP0_O #0 GPIO_EM4WU5
63	PE14		TIM3_CC0 #0	LEU0_TX #2	
64	PE15		TIM3_CC1 #0	LEU0_RX #2	

5.7.2 Alternate Functionality Pinout

A wide selection of alternate functionality is available for multiplexing to various pins. This is shown in the following table. The table shows the name of the alternate functionality in the first column, followed by columns showing the possible LOCATION bitfield settings.

Note: Some functionality, such as analog interfaces, do not have alternate settings or a LOCATION bitfield. In these cases, the pinout is shown in the column corresponding to LOCATION 0.

Table 5.20. Alternate Functionality Overview

Alternate	LOCATION							
Functionality	0	1	2	3	4	5	6	Description
ACMP0_CH0	PC0							Analog comparator ACMP0, channel 0.
ACMP0_CH1	PC1							Analog comparator ACMP0, channel 1.
ACMP0_CH2	PC2							Analog comparator ACMP0, channel 2.
ACMP0_CH3	PC3							Analog comparator ACMP0, channel 3.
ACMP0_CH4	PC4							Analog comparator ACMP0, channel 4.
ACMP0_CH5	PC5							Analog comparator ACMP0, channel 5.
ACMP0_CH6	PC6							Analog comparator ACMP0, channel 6.
ACMP0_CH7	PC7							Analog comparator ACMP0, channel 7.
ACMP0_O	PE13		PD6					Analog comparator ACMP0, digital output.
ACMP1_CH0	PC8							Analog comparator ACMP1, channel 0.
ACMP1_CH1	PC9							Analog comparator ACMP1, channel 1.
ACMP1_CH2	PC10							Analog comparator ACMP1, channel 2.
ACMP1_CH3	PC11							Analog comparator ACMP1, channel 3.
ACMP1_O	PF2		PD7					Analog comparator ACMP1, digital output.
ADC0_CH0	PD0							Analog to digital converter ADC0, input channel number 0.
ADC0_CH1	PD1							Analog to digital converter ADC0, input channel number 1.
ADC0_CH2	PD2							Analog to digital converter ADC0, input channel number 2.
ADC0_CH3	PD3							Analog to digital converter ADC0, input channel number 3.
ADC0_CH4	PD4							Analog to digital converter ADC0, input channel number 4.
ADC0_CH5	PD5							Analog to digital converter ADC0, input channel number 5.
ADC0_CH6	PD6							Analog to digital converter ADC0, input channel number 6.
ADC0_CH7	PD7							Analog to digital converter ADC0, input channel number 7.
BOOT_RX	PE11							Bootloader RX.
BOOT_TX	PE10							Bootloader TX.
BU_VIN	PD8							Battery input for Backup Power Domain

Alternate	LOCATION							
Functionality	0	1	2	3	4	5	6	Description
CMU_CLK0	PA2		PD7					Clock Management Unit, clock output number 0.
CMU_CLK1	PA1	PD8	PE12					Clock Management Unit, clock output number 1.
DAC0_OUT0 / OPAMP_OUT0	PB11							Digital to Analog Converter DAC0_OUT0 /OPAMP output channel number 0.
DAC0_OUT0ALT / OPAMP_OUT0ALT	PC0	PC1	PC2	PC3	PD0			Digital to Analog Converter DAC0_OUT0ALT / OPAMP alternative output for channel 0.
DAC0_OUT1ALT / OPAMP_OUT1ALT					PD1			Digital to Analog Converter DAC0_OUT1ALT / OPAMP alternative output for channel 1.
DBG_SWCLK	PF0	PF0	PF0	PF0				Debug-interface Serial Wire clock input. Note that this function is enabled to pin out of reset, and has a built-in pull down.
DBG_SWDIO	PF1	PF1	PF1	PF1				Debug-interface Serial Wire data input / output. Note that this function is enabled to pin out of reset, and has a built-in pull up.
DBG_SWO	PF2		PD1	PD2				Debug-interface Serial Wire viewer Output. Note that this function is not enabled after reset, and must be enabled by software to be used.
ETM_TCLK	PD7		PC6					Embedded Trace Module ETM clock .
ETM_TD0	PD6		PC7	PA2				Embedded Trace Module ETM data 0.
ETM_TD1	PD3		PD3	PA3				Embedded Trace Module ETM data 1.
ETM_TD2	PD4		PD4	PA4				Embedded Trace Module ETM data 2.
ETM_TD3	PD5		PD5	PA5				Embedded Trace Module ETM data 3.
GPIO_EM4WU0	PA0							Pin can be used to wake the system up from EM4
GPIO_EM4WU2	PC9							Pin can be used to wake the system up from EM4
GPIO_EM4WU3	PF1							Pin can be used to wake the system up from EM4
GPIO_EM4WU4	PF2							Pin can be used to wake the system up from EM4
GPIO_EM4WU5	PE13							Pin can be used to wake the system up from EM4
HFXTAL_N	PB14							High Frequency Crystal negative pin. Also used as external optional clock input pin.
HFXTAL_P	PB13							High Frequency Crystal positive pin.
I2C0_SCL	PA1	PD7	PC7		PC1	PF1	PE13	I2C0 Serial Clock Line input / output.
I2C0_SDA	PA0	PD6	PC6		PC0	PF0	PE12	I2C0 Serial Data input / output.
I2C1_SCL	PC5							I2C1 Serial Clock Line input / output.
I2C1_SDA	PC4							I2C1 Serial Data input / output.
LES_ALTEX0	PD6							LESENSE alternate exite output 0.
LES_ALTEX1	PD7							LESENSE alternate exite output 1.
LES_ALTEX2	PA3							LESENSE alternate exite output 2.
LES_ALTEX3	PA4							LESENSE alternate exite output 3.

Alternate	LOCATION							
Functionality	0	1	2	3	4	5	6	Description
LES_ALTEX4	PA5							LESENSE alternate exite output 4.
LES_ALTEX5	PE11							LESENSE alternate exite output 5.
LES_ALTEX6	PE12							LESENSE alternate exite output 6.
LES_ALTEX7	PE13							LESENSE alternate exite output 7.
LES_CH0	PC0							LESENSE channel 0.
LES_CH1	PC1							LESENSE channel 1.
LES_CH2	PC2							LESENSE channel 2.
LES_CH3	PC3							LESENSE channel 3.
LES_CH4	PC4							LESENSE channel 4.
LES_CH5	PC5							LESENSE channel 5.
LES_CH6	PC6							LESENSE channel 6.
LES_CH7	PC7							LESENSE channel 7.
LES_CH8	PC8							LESENSE channel 8.
LES_CH9	PC9							LESENSE channel 9.
LES_CH10	PC10							LESENSE channel 10.
LES_CH11	PC11							LESENSE channel 11.
LETIM0_OUT0	PD6	PB11	PF0	PC4				Low Energy Timer LETIM0, output channel 0.
LETIM0_OUT1	PD7		PF1	PC5				Low Energy Timer LETIM0, output channel 1.
LEU0_RX	PD5	PB14	PE15	PF1	PA0			LEUART0 Receive input.
LEU0_TX	PD4	PB13	PE14	PF0	PF2			LEUART0 Transmit output. Also used as receive input in half duplex communication.
LEU1_RX	PC7							LEUART1 Receive input.
LEU1_TX	PC6	PA5						LEUART1 Transmit output. Also used as receive input in half duplex communication.
LFXTAL_N	PB8							Low Frequency Crystal (typically 32.768 kHz) negative pin. Also used as an optional external clock input pin.
LFXTAL_P	PB7							Low Frequency Crystal (typically 32.768 kHz) positive pin.
OPAMP_N0 / DAC0_N0	PC5							Operational Amplifier 0 external negative input.
OPAMP_N1 / DAC0_N1	PD7							Operational Amplifier 1 external negative input.
OPAMP_N2	PD3							Operational Amplifier 2 external negative input.
OPAMP_P0 / DAC0_P0	PC4							Operational Amplifier 0 external positive input.
OPAMP_P1 / DAC0_P1	PD6							Operational Amplifier 1 external positive input.
OPAMP_P2	PD4							Operational Amplifier 2 external positive input.
OPAMP_OUT2	PD5	PD0						Operational Amplifier 2 output.

Alternate	LOCATION							
Functionality	0	1	2	3	4	5	6	Description
PCNT0_S0IN			PC0	PD6				Pulse Counter PCNT0 input number 0.
PCNT0_S1IN			PC1	PD7				Pulse Counter PCNT0 input number 1.
PCNT1_S0IN	PC4							Pulse Counter PCNT1 input number 0.
PCNT1_S1IN	PC5							Pulse Counter PCNT1 input number 1.
PCNT2_S0IN	PD0	PE8						Pulse Counter PCNT2 input number 0.
PCNT2_S1IN	PD1	PE9						Pulse Counter PCNT2 input number 1.
PRS_CH0	PA0							Peripheral Reflex System PRS, channel 0.
PRS_CH1	PA1							Peripheral Reflex System PRS, channel 1.
PRS_CH2	PC0	PF5						Peripheral Reflex System PRS, channel 2.
PRS_CH3	PC1	PE8						Peripheral Reflex System PRS, channel 3.
TIM0_CC0	PA0	PA0		PD1	PA0	PF0		Timer 0 Capture Compare input / output channel 0.
TIM0_CC1	PA1	PA1		PD2	PC0	PF1		Timer 0 Capture Compare input / output channel 1.
TIM0_CC2	PA2	PA2		PD3	PC1	PF2		Timer 0 Capture Compare input / output channel 2.
TIM0_CDTI0	PA3				PC2			Timer 0 Complimentary Dead Time Insertion channel 0.
TIM0_CDTI1	PA4				PC3			Timer 0 Complimentary Dead Time Insertion channel 1.
TIM0_CDTI2	PA5		PF5		PC4	PF5		Timer 0 Complimentary Dead Time Insertion channel 2.
TIM1_CC0		PE10		PB7	PD6			Timer 1 Capture Compare input / output channel 0.
TIM1_CC1		PE11		PB8	PD7			Timer 1 Capture Compare input / output channel 1.
TIM1_CC2		PE12		PB11				Timer 1 Capture Compare input / output channel 2.
TIM2_CC0	PA8		PC8					Timer 2 Capture Compare input / output channel 0.
TIM2_CC1	PA9		PC9					Timer 2 Capture Compare input / output channel 1.
TIM2_CC2	PA10		PC10					Timer 2 Capture Compare input / output channel 2.
TIM3_CC0	PE14							Timer 3 Capture Compare input / output channel 0.
TIM3_CC1	PE15							Timer 3 Capture Compare input / output channel 1.
US0_CLK	PE12		PC9		PB13	PB13		USART0 clock input / output.
US0_CS	PE13		PC8		PB14	PB14		USART0 chip select input / output.
US0_RX	PE11		PC10	PE12	PB8	PC1		USART0 Asynchronous Receive. USART0 Synchronous mode Main Input / Secondary Output (MISO).
US0_TX	PE10		PC11	PE13	PB7	PC0		USART0 Asynchronous Transmit.Also used as receive input in half duplex communication. USART0 Synchronous mode Main Output / Secondary Input (MOSI).
US1_CLK	PB7	PD2	PF0					USART1 clock input / output.
US1_CS	PB8	PD3	PF1					USART1 chip select input / output.

Alternate	LOCATION							
Functionality	0	1	2	3	4	5	6	Description
US1_RX	PC1	PD1	PD6					USART1 Asynchronous Receive. USART1 Synchronous mode Main Input / Secondary Output (MISO).
US1_TX	PC0	PD0	PD7					USART1 Asynchronous Transmit.Also used as receive input in half duplex communication. USART1 Synchronous mode Main Output / Secondary Input (MOSI).
US2_CLK	PC4							USART2 clock input / output.
US2_CS	PC5							USART2 chip select input / output.
US2_RX	PC3							USART2 Asynchronous Receive. USART2 Synchronous mode Main Input / Secondary Output (MISO).
US2_TX	PC2							USART2 Asynchronous Transmit.Also used as receive input in half duplex communication. USART2 Synchronous mode Main Output / Secondary Input (MOSI).
USB_DM	PF10							USB D- pin.
USB_DMPU	PD2							USB D- Pullup control.
USB_DP	PF11							USB D+ pin.
USB_ID	PF12							USB ID pin. Used in OTG mode.
USB_VBUS	USB_VBUS							USB 5 V VBUS input.
USB_VBUSEN	PF5							USB 5 V VBUS enable.
USB_VREGI	USB_VREGI							USB Input to internal 3.3 V regulator
USB_VREGO	USB_VREGO							USB Decoupling for internal 3.3 V USB regulator and regulator output

5.7.3 GPIO Pinout Overview

The specific GPIO pins available in EFM32WG332 are shown in the following table. Each GPIO port is organized as 16-bit ports indicated by letters A through F, and the individual pin on this port is indicated by a number from 15 down to 0.

Table 5.21. GPIO Pinout

Port	Pin 15	Pin 14	Pin 13	Pin 12	Pin 11	Pin 10	Pin 9	Pin 8	Pin 7	Pin 6	Pin 5	Pin 4	Pin 3	Pin 2	Pin 1	Pin 0
Port A	-	-	-	-	-	PA10	PA9	PA8	-	-	PA5	PA4	PA3	PA2	PA1	PA0
Port B	-	PB14	PB13	-	PB11	-	-	PB8	PB7	-	-	-	-	-	-	-
Port C	-	-	-	-	PC11	PC10	PC9	PC8	PC7	PC6	PC5	PC4	PC3	PC2	PC1	PC0
Port D	-	-	-	-	-	-	-	PD8	PD7	PD6	PD5	PD4	PD3	PD2	PD1	PD0
Port E	PE15	PE14	PE13	PE12	PE11	PE10	PE9	PE8	-	-	-	-	-	-	-	-
Port F	-	-	-	PF12	PF11	PF10	-	-	-	-	PF5	-	-	PF2	PF1	PF0

5.7.4 Opamp Pinout Overview

The specific opamp terminals available in EFM32WG332 is shown in the following figure.

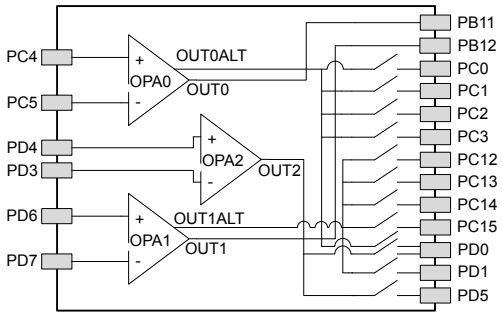

Figure 5.14. Opamp Pinout

5.8 EFM32WG360 (CSP81)

5.8.1 Pinout

The EFM32WG360 pinout is shown in the following figure and table. Alternate locations are denoted by "#" followed by the location number (Multiple locations on the same pin are split with "/"). Alternate locations can be configured in the LOCATION bitfield in the *_ROUTE register in the module in question.

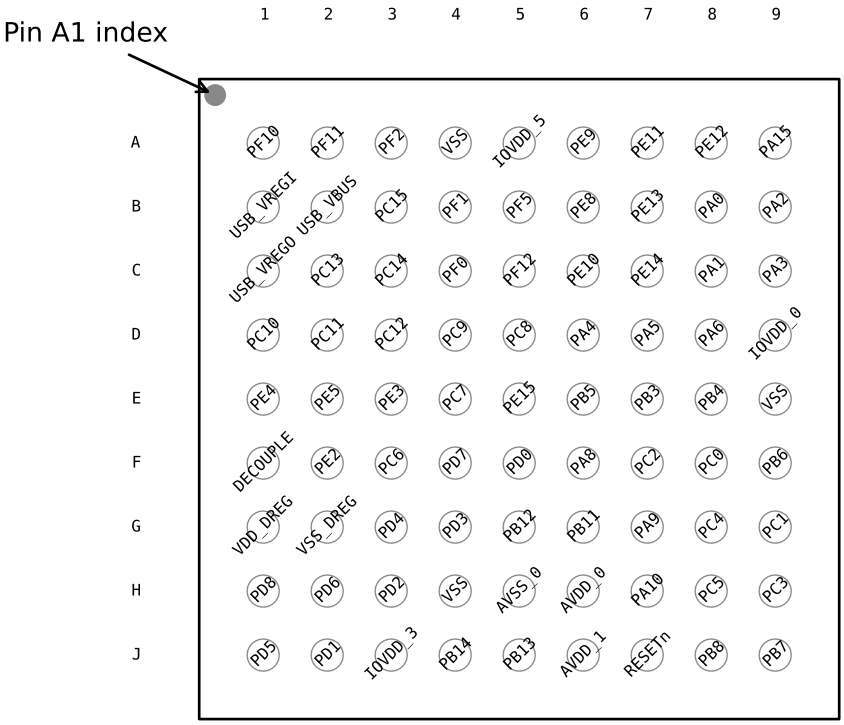

Figure 5.15. EFM32WG360 Pinout (top view, not to scale)

Table 5.22. Device Pinout

CSP81 Pin# and Name		Pin Alternate Functionality / Description			
Pin #	**Pin Name**	**Analog**	**Timers**	**Communication**	**Other**
A1	PF10			U1_TX #1 USB_DM	
A2	PF11			U1_RX #1 USB_DP	
A3	PF2		TIM0_CC2 #5	LEU0_TX #4	ACMP1_O #0 DBG_SWO #0 GPIO_EM4WU4

CSP81 Pin# and Name		Pin Alternate Functionality / Description			
Pin #	Pin Name	Analog	Timers	Communication	Other
A4	VSS	Ground.			
A5	IOVDD_5	Digital IO power supply 5.			
A6	PE9		PCNT2_S1IN #1		
A7	PE11		TIM1_CC1 #1	US0_RX #0	LES_ALTEX5 #0 BOOT_RX
A8	PE12		TIM1_CC2 #1	US0_RX #3 US0_CLK #0 I2C0_SDA #6	CMU_CLK1 #2 LES_ALTEX6 #0
A9	PA15		TIM3_CC2 #0		
B1	USB_VREGI	Input to internal 3.3V USB regulator			
B2	USB_VBUS	USB 5.0 V VBUS input.			
B3	PC15	ACMP1_CH7 DAC0_OUT1ALT #3/ OPAMP_OUT1ALT	TIM0_CDTI2 #1/3 TIM1_CC2 #0	US0_CLK #3 U0_RX #3	LES_CH15 #0 DBG_SWO #1
B4	PF1		TIM0_CC1 #5 LE-TIM0_OUT1 #2	US1_CS #2 LEU0_RX #3 I2C0_SCL #5	DBG_SWDIO #0/1/2/3 GPIO_EM4WU3
B5	PF5		TIM0_CDTI2 #2/5	USB_VBUSEN #0	PRS_CH2 #1
B6	PE8		PCNT2_S0IN #1		PRS_CH3 #1
B7	PE13			US0_TX #3 US0_CS #0 I2C0_SCL #6	LES_ALTEX7 #0 ACMP0_O #0 GPIO_EM4WU5
B8	PA0		TIM0_CC0 #0/1/4	LEU0_RX #4 I2C0_SDA #0	PRS_CH0 #0 GPIO_EM4WU0
B9	PA2		TIM0_CC2 #0/1		CMU_CLK0 #0 ETM_TD0 #3
C1	USB_VREGO	Output and decoupling for internal 3.3V USB regulator			
C2	PC13	ACMP1_CH5 DAC0_OUT1ALT #1/ OPAMP_OUT1ALT	TIM0_CDTI0 #1/3 TIM1_CC0 #0 TIM1_CC2 #4 PCNT0_S0IN #0	U1_RX #0	LES_CH13 #0
C3	PC14	ACMP1_CH6 DAC0_OUT1ALT #2/ OPAMP_OUT1ALT	TIM0_CDTI1 #1/3 TIM1_CC1 #0 PCNT0_S1IN #0	US0_CS #3 U0_TX #3	LES_CH14 #0
C4	PF0		TIM0_CC0 #5 LE-TIM0_OUT0 #2	US1_CLK #2 LEU0_TX #3 I2C0_SDA #5	DBG_SWCLK #0/1/2/3
C5	PF12			USB_ID	
C6	PE10		TIM1_CC0 #1	US0_TX #0	BOOT_TX
C7	PE14		TIM3_CC0 #0	LEU0_TX #2	
C8	PA1		TIM0_CC1 #0/1	I2C0_SCL #0	CMU_CLK1 #0 PRS_CH1 #0
C9	PA3		TIM0_CDTI0 #0	U0_TX #2	LES_ALTEX2 #0 ETM_TD1 #3
D1	PC10	ACMP1_CH2	TIM2_CC2 #2	US0_RX #2	LES_CH10 #0
D2	PC11	ACMP1_CH3		US0_TX #2	LES_CH11 #0

CSP81 Pin# and Name		Pin Alternate Functionality / Description			
Pin #	Pin Name	Analog	Timers	Communication	Other
D3	PC12	ACMP1_CH4 DAC0_OUT1ALT #0/ OPAMP_OUT1ALT		U1_TX #0	CMU_CLK0 #1 LES_CH12 #0
D4	PC9	ACMP1_CH1	TIM2_CC1 #2	US0_CLK #2	LES_CH9 #0 GPIO_EM4WU2
D5	PC8	ACMP1_CH0	TIM2_CC0 #2	US0_CS #2	LES_CH8 #0
D6	PA4		TIM0_CDTI1 #0	U0_RX #2	LES_ALTEX3 #0 ETM_TD2 #3
D7	PA5		TIM0_CDTI2 #0	LEU1_TX #1	LES_ALTEX4 #0 ETM_TD3 #3
D8	PA6			LEU1_RX #1	ETM_TCLK #3 GPIO_EM4WU1
D9	IOVDD_0	Digital IO power supply 0.			
E1	PE4			US0_CS #1	
E2	PE5			US0_CLK #1	
E3	PE3	BU_STAT		U1_RX #3	ACMP1_O #1
E4	PC7	ACMP0_CH7		LEU1_RX #0 I2C0_SCL #2	LES_CH7 #0 ETM_TD0 #2
E5	PE15		TIM3_CC1 #0	LEU0_RX #2	
E6	PB5			US2_CLK #1	
E7	PB3		PCNT1_S0IN #1	US2_TX #1	
E8	PB4		PCNT1_S1IN #1	US2_RX #1	
E9	VSS	Ground.			
F1	DECOUPLE	Decouple output for on-chip voltage regulator. An external capacitance of size $C_{DECOUPLE}$ is required at this pin.			
F2	PE2	BU_VOUT	TIM3_CC2 #1	U1_TX #3	ACMP0_O #1
F3	PC6	ACMP0_CH6		LEU1_TX #0 I2C0_SDA #2	LES_CH6 #0 ETM_TCLK #2
F4	PD7	ADC0_CH7 / DAC0_N1 / OPAMP_N1	TIM1_CC1 #4 LE-TIM0_OUT1 #0 PCNT0_S1IN #3	US1_TX #2 I2C0_SCL #1	CMU_CLK0 #2 LES_ALTEX1 #0 ACMP1_O #2 ETM_TCLK #0
F5	PD0	ADC0_CH0 DAC0_OUT0ALT #4/ OPAMP_OUT0ALT OPAMP_OUT2 #1	PCNT2_S0IN #0	US1_TX #1	
F6	PA8		TIM2_CC0 #0		
F7	PC2	ACMP0_CH2 DAC0_OUT0ALT #2/ OPAMP_OUT0ALT	TIM0_CDTI0 #4	US2_TX #0	LES_CH2 #0
F8	PC0	ACMP0_CH0 DAC0_OUT0ALT #0/ OPAMP_OUT0ALT	TIM0_CC1 #4 PCNT0_S0IN #2	US0_TX #5 US1_TX #0 I2C0_SDA #4	LES_CH0 #0 PRS_CH2 #0
F9	PB6			US2_CS #1	

CSP81 Pin# and Name		Pin Alternate Functionality / Description			
Pin #	Pin Name	Analog	Timers	Communication	Other
G1	VDD_DREG	Power supply for on-chip voltage regulator.			
G2	VSS_DREG	Ground for on-chip voltage regulator.			
G3	PD4	ADC0_CH4 OPAMP_P2		LEU0_TX #0	ETM_TD2 #0/2
G4	PD3	ADC0_CH3 OPAMP_N2	TIM0_CC2 #3	US1_CS #1	ETM_TD1 #0/2
G5	PB12	DAC0_OUT1 / OPAMP_OUT1	LETIM0_OUT1 #1	I2C1_SCL #1	
G6	PB11	DAC0_OUT0 / OPAMP_OUT0	TIM1_CC2 #3 LE-TIM0_OUT0 #1	I2C1_SDA #1	
G7	PA9		TIM2_CC1 #0		
G8	PC4	ACMP0_CH4 / DAC0_P0 / OPAMP_P0	TIM0_CDTI2 #4 LE-TIM0_OUT0 #3 PCNT1_S0IN #0	US2_CLK #0 I2C1_SDA #0	LES_CH4 #0
G9	PC1	ACMP0_CH1 DAC0_OUT0ALT #1/ OPAMP_OUT0ALT	TIM0_CC2 #4 PCNT0_S1IN #2	US0_RX #5 US1_RX #0 I2C0_SCL #4	LES_CH1 #0 PRS_CH3 #0
H1	PD8	BU_VIN			CMU_CLK1 #1
H2	PD6	ADC0_CH6 / DAC0_P1 / OPAMP_P1	TIM1_CC0 #4 LE-TIM0_OUT0 #0 PCNT0_S0IN #3	US1_RX #2 I2C0_SDA #1	LES_ALTEX0 #0 ACMP0_O #2 ETM_TD0 #0
H3	PD2	ADC0_CH2	TIM0_CC1 #3	USB_DMPU #0 US1_CLK #1	DBG_SWO #3
H4	VSS	Ground.			
H5	AVSS_0	Analog ground 0.			
H6	AVDD_0	Analog power supply 0.			
H7	PA10		TIM2_CC2 #0		
H8	PC5	ACMP0_CH5 / DAC0_N0 / PD6OPAMP_N0	LETIM0_OUT1 #3 PCNT1_S1IN #0	US2_CS #0 I2C1_SCL #0	LES_CH5 #0
H9	PC3	ACMP0_CH3 DAC0_OUT0ALT #3/ OPAMP_OUT0ALT	TIM0_CDTI1 #4	US2_RX #0	LES_CH3 #0
J1	PD5	ADC0_CH5 OPAMP_OUT2 #0		LEU0_RX #0	ETM_TD3 #0/2
J2	PD1	ADC0_CH1 DAC0_OUT1ALT #4/ OPAMP_OUT1ALT	TIM0_CC0 #3 PCNT2_S1IN #0	US1_RX #1	DBG_SWO #2
J3	IOVDD_3	Digital IO power supply 3.			
J4	PB14	HFXTAL_N		US0_CS #4/5 LEU0_RX #1	
J5	PB13	HFXTAL_P		US0_CLK #4/5 LEU0_TX #1	
J6	AVDD_1	Analog power supply 1.			
J7	RESETn	Reset input, active low. To apply an external reset source to this pin, it is required to only drive this pin low during reset, and let the internal pull-up ensure that reset is released.			

CSP81 Pin# and Name		Pin Alternate Functionality / Description			
Pin #	Pin Name	Analog	Timers	Communication	Other
J8	PB8	LFXTAL_N	TIM1_CC1 #3	US0_RX #4 US1_CS #0	
J9	PB7	LFXTAL_P	TIM1_CC0 #3	US0_TX #4 US1_CLK #0	

5.8.2 Alternate Functionality Pinout

A wide selection of alternate functionality is available for multiplexing to various pins. This is shown in the following table. The table shows the name of the alternate functionality in the first column, followed by columns showing the possible LOCATION bitfield settings.

Note: Some functionality, such as analog interfaces, do not have alternate settings or a LOCATION bitfield. In these cases, the pinout is shown in the column corresponding to LOCATION 0.

Table 5.23. Alternate Functionality Overview

Alternate	LOCATION							
Functionality	0	1	2	3	4	5	6	Description
ACMP0_CH0	PC0							Analog comparator ACMP0, channel 0.
ACMP0_CH1	PC1							Analog comparator ACMP0, channel 1.
ACMP0_CH2	PC2							Analog comparator ACMP0, channel 2.
ACMP0_CH3	PC3							Analog comparator ACMP0, channel 3.
ACMP0_CH4	PC4							Analog comparator ACMP0, channel 4.
ACMP0_CH5	PC5							Analog comparator ACMP0, channel 5.
ACMP0_CH6	PC6							Analog comparator ACMP0, channel 6.
ACMP0_CH7	PC7							Analog comparator ACMP0, channel 7.
ACMP0_O	PE13	PE2	PD6					Analog comparator ACMP0, digital output.
ACMP1_CH0	PC8							Analog comparator ACMP1, channel 0.
ACMP1_CH1	PC9							Analog comparator ACMP1, channel 1.
ACMP1_CH2	PC10							Analog comparator ACMP1, channel 2.
ACMP1_CH3	PC11							Analog comparator ACMP1, channel 3.
ACMP1_CH4	PC12							Analog comparator ACMP1, channel 4.
ACMP1_CH5	PC13							Analog comparator ACMP1, channel 5.
ACMP1_CH6	PC14							Analog comparator ACMP1, channel 6.
ACMP1_CH7	PC15							Analog comparator ACMP1, channel 7.
ACMP1_O	PF2	PE3	PD7					Analog comparator ACMP1, digital output.
ADC0_CH0	PD0							Analog to digital converter ADC0, input channel number 0.
ADC0_CH1	PD1							Analog to digital converter ADC0, input channel number 1.
ADC0_CH2	PD2							Analog to digital converter ADC0, input channel number 2.
ADC0_CH3	PD3							Analog to digital converter ADC0, input channel number 3.
ADC0_CH4	PD4							Analog to digital converter ADC0, input channel number 4.
ADC0_CH5	PD5							Analog to digital converter ADC0, input channel number 5.
ADC0_CH6	PD6							Analog to digital converter ADC0, input channel number 6.

Alternate	LOCATION							
Functionality	0	1	2	3	4	5	6	Description
ADC0_CH7	PD7							Analog to digital converter ADC0, input channel number 7.
BOOT_RX	PE11							Bootloader RX.
BOOT_TX	PE10							Bootloader TX.
BU_STAT	PE3							Backup Power Domain status, whether or not the system is in backup mode
BU_VIN	PD8							Battery input for Backup Power Domain
BU_VOUT	PE2							Power output for Backup Power Domain
CMU_CLK0	PA2	PC12	PD7					Clock Management Unit, clock output number 0.
CMU_CLK1	PA1	PD8	PE12					Clock Management Unit, clock output number 1.
DAC0_OUT0 / OPAMP_OUT0	PB11							Digital to Analog Converter DAC0_OUT0 /OPAMP output channel number 0.
DAC0_OUT0ALT / OPAMP_OUT0ALT	PC0	PC1	PC2	PC3	PD0			Digital to Analog Converter DAC0_OUT0ALT / OPAMP alternative output for channel 0.
DAC0_OUT1 / OPAMP_OUT1	PB12							Digital to Analog Converter DAC0_OUT1 /OPAMP output channel number 1.
DAC0_OUT1ALT / OPAMP_OUT1ALT	PC12	PC13	PC14	PC15	PD1			Digital to Analog Converter DAC0_OUT1ALT / OPAMP alternative output for channel 1.
DBG_SWCLK	PF0	PF0	PF0	PF0				Debug-interface Serial Wire clock input. Note that this function is enabled to pin out of reset, and has a built-in pull down.
DBG_SWDIO	PF1	PF1	PF1	PF1				Debug-interface Serial Wire data input / output. Note that this function is enabled to pin out of reset, and has a built-in pull up.
DBG_SWO	PF2	PC15	PD1	PD2				Debug-interface Serial Wire viewer Output. Note that this function is not enabled after reset, and must be enabled by software to be used.
ETM_TCLK	PD7		PC6	PA6				Embedded Trace Module ETM clock .
ETM_TD0	PD6		PC7	PA2				Embedded Trace Module ETM data 0.
ETM_TD1	PD3		PD3	PA3				Embedded Trace Module ETM data 1.
ETM_TD2	PD4		PD4	PA4				Embedded Trace Module ETM data 2.
ETM_TD3	PD5		PD5	PA5				Embedded Trace Module ETM data 3.
GPIO_EM4WU0	PA0							Pin can be used to wake the system up from EM4
GPIO_EM4WU1	PA6							Pin can be used to wake the system up from EM4
GPIO_EM4WU2	PC9							Pin can be used to wake the system up from EM4
GPIO_EM4WU3	PF1							Pin can be used to wake the system up from EM4
GPIO_EM4WU4	PF2							Pin can be used to wake the system up from EM4
GPIO_EM4WU5	PE13							Pin can be used to wake the system up from EM4

Alternate	LOCATION							
Functionality	0	1	2	3	4	5	6	Description
HFXTAL_N	PB14							High Frequency Crystal negative pin. Also used as external optional clock input pin.
HFXTAL_P	PB13							High Frequency Crystal positive pin.
I2C0_SCL	PA1	PD7	PC7		PC1	PF1	PE13	I2C0 Serial Clock Line input / output.
I2C0_SDA	PA0	PD6	PC6		PC0	PF0	PE12	I2C0 Serial Data input / output.
I2C1_SCL	PC5	PB12						I2C1 Serial Clock Line input / output.
I2C1_SDA	PC4	PB11						I2C1 Serial Data input / output.
LES_ALTEX0	PD6							LESENSE alternate exite output 0.
LES_ALTEX1	PD7							LESENSE alternate exite output 1.
LES_ALTEX2	PA3							LESENSE alternate exite output 2.
LES_ALTEX3	PA4							LESENSE alternate exite output 3.
LES_ALTEX4	PA5							LESENSE alternate exite output 4.
LES_ALTEX5	PE11							LESENSE alternate exite output 5.
LES_ALTEX6	PE12							LESENSE alternate exite output 6.
LES_ALTEX7	PE13							LESENSE alternate exite output 7.
LES_CH0	PC0							LESENSE channel 0.
LES_CH1	PC1							LESENSE channel 1.
LES_CH2	PC2							LESENSE channel 2.
LES_CH3	PC3							LESENSE channel 3.
LES_CH4	PC4							LESENSE channel 4.
LES_CH5	PC5							LESENSE channel 5.
LES_CH6	PC6							LESENSE channel 6.
LES_CH7	PC7							LESENSE channel 7.
LES_CH8	PC8							LESENSE channel 8.
LES_CH9	PC9							LESENSE channel 9.
LES_CH10	PC10							LESENSE channel 10.
LES_CH11	PC11							LESENSE channel 11.
LES_CH12	PC12							LESENSE channel 12.
LES_CH13	PC13							LESENSE channel 13.
LES_CH14	PC14							LESENSE channel 14.
LES_CH15	PC15							LESENSE channel 15.
LETIM0_OUT0	PD6	PB11	PF0	PC4				Low Energy Timer LETIM0, output channel 0.
LETIM0_OUT1	PD7	PB12	PF1	PC5				Low Energy Timer LETIM0, output channel 1.
LEU0_RX	PD5	PB14	PE15	PF1	PA0			LEUART0 Receive input.
LEU0_TX	PD4	PB13	PE14	PF0	PF2			LEUART0 Transmit output. Also used as receive input in half duplex communication.
LEU1_RX	PC7	PA6						LEUART1 Receive input.

Alternate	LOCATION							
Functionality	0	1	2	3	4	5	6	Description
LEU1_TX	PC6	PA5						LEUART1 Transmit output. Also used as receive input in half duplex communication.
LFXTAL_N	PB8							Low Frequency Crystal (typically 32.768 kHz) negative pin. Also used as an optional external clock input pin.
LFXTAL_P	PB7							Low Frequency Crystal (typically 32.768 kHz) positive pin.
OPAMP_N0 / DAC0_N0	PC5							Operational Amplifier 0 external negative input.
OPAMP_N1 / DAC0_N1	PD7							Operational Amplifier 1 external negative input.
OPAMP_N2	PD3							Operational Amplifier 2 external negative input.
OPAMP_OUT2	PD5	PD0						Operational Amplifier 2 output.
OPAMP_P0 / DAC0_P0	PC4							Operational Amplifier 0 external positive input.
OPAMP_P1 / DAC0_P1	PD6							Operational Amplifier 1 external positive input.
OPAMP_P2	PD4							Operational Amplifier 2 external positive input.
PCNT0_S0IN	PC13		PC0	PD6				Pulse Counter PCNT0 input number 0.
PCNT0_S1IN	PC14		PC1	PD7				Pulse Counter PCNT0 input number 1.
PCNT1_S0IN	PC4	PB3						Pulse Counter PCNT1 input number 0.
PCNT1_S1IN	PC5	PB4						Pulse Counter PCNT1 input number 1.
PCNT2_S0IN	PD0	PE8						Pulse Counter PCNT2 input number 0.
PCNT2_S1IN	PD1	PE9						Pulse Counter PCNT2 input number 1.
PRS_CH0	PA0							Peripheral Reflex System PRS, channel 0.
PRS_CH1	PA1							Peripheral Reflex System PRS, channel 1.
PRS_CH2	PC0	PF5						Peripheral Reflex System PRS, channel 2.
PRS_CH3	PC1	PE8						Peripheral Reflex System PRS, channel 3.
TIM0_CC0	PA0	PA0		PD1	PA0	PF0		Timer 0 Capture Compare input / output channel 0.
TIM0_CC1	PA1	PA1		PD2	PC0	PF1		Timer 0 Capture Compare input / output channel 1.
TIM0_CC2	PA2	PA2		PD3	PC1	PF2		Timer 0 Capture Compare input / output channel 2.
TIM0_CDTI0	PA3	PC13		PC13	PC2			Timer 0 Complimentary Deat Time Insertion channel 0.
TIM0_CDTI1	PA4	PC14		PC14	PC3			Timer 0 Complimentary Deat Time Insertion channel 1.
TIM0_CDTI2	PA5	PC15	PF5	PC15	PC4	PF5		Timer 0 Complimentary Deat Time Insertion channel 2.
TIM1_CC0	PC13	PE10		PB7	PD6			Timer 1 Capture Compare input / output channel 0.
TIM1_CC1	PC14	PE11		PB8	PD7			Timer 1 Capture Compare input / output channel 1.
TIM1_CC2	PC15	PE12		PB11	PC13			Timer 1 Capture Compare input / output channel 2.
TIM2_CC0	PA8		PC8					Timer 2 Capture Compare input / output channel 0.

Alternate	LOCATION							
Functionality	0	1	2	3	4	5	6	Description
TIM2_CC1	PA9		PC9					Timer 2 Capture Compare input / output channel 1.
TIM2_CC2	PA10		PC10					Timer 2 Capture Compare input / output channel 2.
TIM3_CC0	PE14							Timer 3 Capture Compare input / output channel 0.
TIM3_CC1	PE15							Timer 3 Capture Compare input / output channel 1.
TIM3_CC2	PA15	PE2						Timer 3 Capture Compare input / output channel 2.
U0_RX			PA4	PC15				UART0 Receive input.
U0_TX			PA3	PC14				UART0 Transmit output. Also used as receive input in half duplex communication.
U1_RX	PC13	PF11		PE3				UART1 Receive input.
U1_TX	PC12	PF10		PE2				UART1 Transmit output. Also used as receive input in half duplex communication.
US0_CLK	PE12	PE5	PC9	PC15	PB13	PB13		USART0 clock input / output.
US0_CS	PE13	PE4	PC8	PC14	PB14	PB14		USART0 chip select input / output.
US0_RX	PE11		PC10	PE12	PB8	PC1		USART0 Asynchronous Receive. USART0 Synchronous mode Main Input / Secondary Output (MISO).
US0_TX	PE10		PC11	PE13	PB7	PC0		USART0 Asynchronous Transmit.Also used as receive input in half duplex communication. USART0 Synchronous mode Main Output / Secondary Input (MOSI).
US1_CLK	PB7	PD2	PF0					USART1 clock input / output.
US1_CS	PB8	PD3	PF1					USART1 chip select input / output.
US1_RX	PC1	PD1	PD6					USART1 Asynchronous Receive. USART1 Synchronous mode Main Input / Secondary Output (MISO).
US1_TX	PC0	PD0	PD7					USART1 Asynchronous Transmit.Also used as receive input in half duplex communication. USART1 Synchronous mode Main Output / Secondary Input (MOSI).
US2_CLK	PC4	PB5						USART2 clock input / output.
US2_CS	PC5	PB6						USART2 chip select input / output.
US2_RX	PC3	PB4						USART2 Asynchronous Receive. USART2 Synchronous mode Main Input / Secondary Output (MISO).
US2_TX	PC2	PB3						USART2 Asynchronous Transmit.Also used as receive input in half duplex communication. USART2 Synchronous mode Main Output / Secondary Input (MOSI).
USB_DM	PF10							USB D- pin.
USB_DMPU	PD2							USB D- Pullup control.

Alternate	LOCATION							
Functionality	0	1	2	3	4	5	6	Description
USB_DP	PF11							USB D+ pin.
USB_ID	PF12							USB ID pin. Used in OTG mode.
USB_VBUS	USB_VBUS							USB 5 V VBUS input.
USB_VBUSEN	PF5							USB 5 V VBUS enable.
USB_VREGI	USB_VREGI							USB Input to internal 3.3 V regulator
USB_VREGO	USB_VREGO							USB Decoupling for internal 3.3 V USB regulator and regulator output

5.8.3 GPIO Pinout Overview

The specific GPIO pins available in EFM32WG360 are shown in the following table. Each GPIO port is organized as 16-bit ports indicated by letters A through F, and the individual pin on this port is indicated by a number from 15 down to 0.

Table 5.24. GPIO Pinout

Port	Pin 15	Pin 14	Pin 13	Pin 12	Pin 11	Pin 10	Pin 9	Pin 8	Pin 7	Pin 6	Pin 5	Pin 4	Pin 3	Pin 2	Pin 1	Pin 0
Port A	PA15	-	-	-	-	PA10	PA9	PA8	-	PA6	PA5	PA4	PA3	PA2	PA1	PA0
Port B	-	PB14	PB13	PB12	PB11	-	-	PB8	PB7	PB6	PB5	PB4	PB3	-	-	-
Port C	PC15	PC14	PC13	PC12	PC11	PC10	PC9	PC8	PC7	PC6	PC5	PC4	PC3	PC2	PC1	PC0
Port D	-	-	-	-	-	-	-	PD8	PD7	PD6	PD5	PD4	PD3	PD2	PD1	PD0
Port E	PE15	PE14	PE13	PE12	PE11	PE10	PE9	PE8	-	-	PE5	PE4	PE3	PE2	-	-
Port F	-	-	-	PF12	PF11	PF10	-	-	-	-	PF5	-	-	PF2	PF1	PF0

5.8.4 Opamp Pinout Overview

The specific opamp terminals available in EFM32WG360 is shown in the following figure.

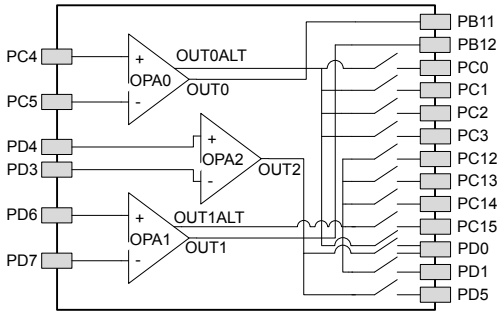

Figure 5.16. Opamp Pinout

5.9 EFM32WG380 (LQFP100)

5.9.1 Pinout

The EFM32WG380 pinout is shown in the following figure and table. Alternate locations are denoted by "#" followed by the location number (Multiple locations on the same pin are split with "/"). Alternate locations can be configured in the LOCATION bitfield in the *_ROUTE register in the module in question.

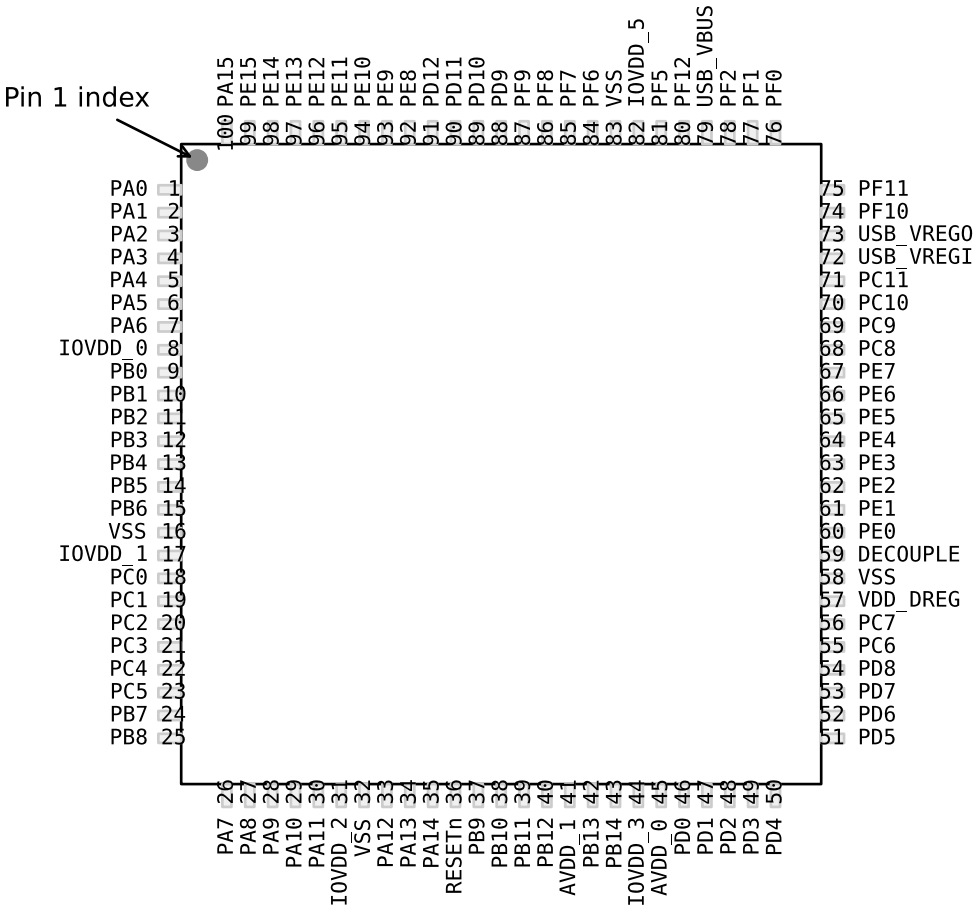

Figure 5.17. EFM32WG380 Pinout (top view, not to scale)

Table 5.25. Device Pinout

LQFP100 Pin# and Name		Pin Alternate Functionality / Description				
Pin #	Pin Name	Analog	EBI	Timers	Communication	Other
1	PA0		EBI_AD09 #0/1/2	TIM0_CC0 #0/1/4	LEU0_RX #4 I2C0_SDA #0	PRS_CH0 #0 GPIO_EM4WU0
2	PA1		EBI_AD10 #0/1/2	TIM0_CC1 #0/1	I2C0_SCL #0	CMU_CLK1 #0 PRS_CH1 #0
3	PA2		EBI_AD11 #0/1/2	TIM0_CC2 #0/1		CMU_CLK0 #0 ETM_TD0 #3
4	PA3		EBI_AD12 #0/1/2	TIM0_CDTI0 #0	U0_TX #2	LES_ALTEX2 #0 ETM_TD1 #3
5	PA4		EBI_AD13 #0/1/2	TIM0_CDTI1 #0	U0_RX #2	LES_ALTEX3 #0 ETM_TD2 #3
6	PA5		EBI_AD14 #0/1/2	TIM0_CDTI2 #0	LEU1_TX #1	LES_ALTEX4 #0 ETM_TD3 #3
7	PA6		EBI_AD15 #0/1/2		LEU1_RX #1	ETM_TCLK #3 GPIO_EM4WU1
8	IOVDD_0	Digital IO power supply 0.				
9	PB0		EBI_A16 #0/1/2	TIM1_CC0 #2		
10	PB1		EBI_A17 #0/1/2	TIM1_CC1 #2		
11	PB2		EBI_A18 #0/1/2	TIM1_CC2 #2		
12	PB3		EBI_A19 #0/1/2	PCNT1_S0IN #1	US2_TX #1	
13	PB4		EBI_A20 #0/1/2	PCNT1_S1IN #1	US2_RX #1	
14	PB5		EBI_A21 #0/1/2		US2_CLK #1	
15	PB6		EBI_A22 #0/1/2		US2_CS #1	
16	VSS	Ground.				
17	IOVDD_1	Digital IO power supply 1.				
18	PC0	ACMP0_CH0 DAC0_OUT0ALT #0/ OPAMP_OUT0ALT	EBI_A23 #0/1/2	TIM0_CC1 #4 PCNT0_S0IN #2	US0_TX #5 US1_TX #0 I2C0_SDA #4	LES_CH0 #0 PRS_CH2 #0
19	PC1	ACMP0_CH1 DAC0_OUT0ALT #1/ OPAMP_OUT0ALT	EBI_A24 #0/1/2	TIM0_CC2 #4 PCNT0_S1IN #2	US0_RX #5 US1_RX #0 I2C0_SCL #4	LES_CH1 #0 PRS_CH3 #0
20	PC2	ACMP0_CH2 DAC0_OUT0ALT #2/ OPAMP_OUT0ALT	EBI_A25 #0/1/2	TIM0_CDTI0 #4	US2_TX #0	LES_CH2 #0
21	PC3	ACMP0_CH3 DAC0_OUT0ALT #3/ OPAMP_OUT0ALT	EBI_NANDREn #0/1/2	TIM0_CDTI1 #4	US2_RX #0	LES_CH3 #0

LQFP100 Pin# and Name		Pin Alternate Functionality / Description				
Pin #	Pin Name	Analog	EBI	Timers	Communication	Other
22	PC4	ACMP0_CH4 / DAC0_P0 / OPAMP_P0	EBI_A26 #0/1/2	TIM0_CDTI2 #4 LE-TIM0_OUT0 #3 PCNT1_S0IN #0	US2_CLK #0 I2C1_SDA #0	LES_CH4 #0
23	PC5	ACMP0_CH5 / DAC0_N0 / OPAMP_N0	EBI_NANDWEn #0/1/2	LETIM0_OUT1 #3 PCNT1_S1IN #0	US2_CS #0 I2C1_SCL #0	LES_CH5 #0
24	PB7	LFXTAL_P		TIM1_CC0 #3	US0_TX #4 US1_CLK #0	
25	PB8	LFXTAL_N		TIM1_CC1 #3	US0_RX #4 US1_CS #0	
26	PA7		EBI_CSTFT #0/1/2			
27	PA8		EBI_DCLK #0/1/2	TIM2_CC0 #0		
28	PA9		EBI_DTEN #0/1/2	TIM2_CC1 #0		
29	PA10		EBI_VSNC #0/1/2	TIM2_CC2 #0		
30	PA11		EBI_HSNC #0/1/2			
31	IOVDD_2	Digital IO power supply 2.				
32	VSS	Ground.				
33	PA12		EBI_A00 #0/1/2	TIM2_CC0 #1		
34	PA13		EBI_A01 #0/1/2	TIM2_CC1 #1		
35	PA14		EBI_A02 #0/1/2	TIM2_CC2 #1		
36	RESETn	Reset input, active low. To apply an external reset source to this pin, it is required to only drive this pin low during reset, and let the internal pull-up ensure that reset is released.				
37	PB9		EBI_A03 #0/1/2		U1_TX #2	
38	PB10		EBI_A04 #0/1/2		U1_RX #2	
39	PB11	DAC0_OUT0 / OPAMP_OUT0		TIM1_CC2 #3 LE-TIM0_OUT0 #1	I2C1_SDA #1	
40	PB12	DAC0_OUT1 / OPAMP_OUT1		LETIM0_OUT1 #1	I2C1_SCL #1	
41	AVDD_1	Analog power supply 1.				
42	PB13	HFXTAL_P			US0_CLK #4/5 LEU0_TX #1	
43	PB14	HFXTAL_N			US0_CS #4/5 LEU0_RX #1	
44	IOVDD_3	Digital IO power supply 3.				
45	AVDD_0	Analog power supply 0.				
46	PD0	ADC0_CH0 DAC0_OUT0ALT #4/ OPAMP_OUT0ALT OPAMP_OUT2 #1		PCNT2_S0IN #0	US1_TX #1	

LQFP100 Pin# and Name		Pin Alternate Functionality / Description				
Pin #	Pin Name	Analog	EBI	Timers	Communication	Other
47	PD1	ADC0_CH1 DAC0_OUT1ALT #4/ OPAMP_OUT1ALT		TIM0_CC0 #3 PCNT2_S1IN #0	US1_RX #1	DBG_SWO #2
48	PD2	ADC0_CH2	EBI_A27 #0/1/2	TIM0_CC1 #3	USB_DMPU #0 US1_CLK #1	DBG_SWO #3
49	PD3	ADC0_CH3 OPAMP_N2		TIM0_CC2 #3	US1_CS #1	ETM_TD1 #0/2
50	PD4	ADC0_CH4 OPAMP_P2			LEU0_TX #0	ETM_TD2 #0/2
51	PD5	ADC0_CH5 OPAMP_OUT2 #0			LEU0_RX #0	ETM_TD3 #0/2
52	PD6	ADC0_CH6 / DAC0_P1 / OPAMP_P1		TIM1_CC0 #4 LE-TIM0_OUT0 #0 PCNT0_S0IN #3	US1_RX #2 I2C0_SDA #1	LES_ALTEX0 #0 ACMP0_O #2 ETM_TD0 #0
53	PD7	ADC0_CH7 / DAC0_N1 / OPAMP_N1		TIM1_CC1 #4 LE-TIM0_OUT1 #0 PCNT0_S1IN #3	US1_TX #2 I2C0_SCL #1	CMU_CLK0 #2 LES_ALTEX1 #0 ACMP1_O #2 ETM_TCLK #0
54	PD8	BU_VIN				CMU_CLK1 #1
55	PC6	ACMP0_CH6	EBI_A05 #0/1/2		LEU1_TX #0 I2C0_SDA #2	LES_CH6 #0 ETM_TCLK #2
56	PC7	ACMP0_CH7	EBI_A06 #0/1/2		LEU1_RX #0 I2C0_SCL #2	LES_CH7 #0 ETM_TD0 #2
57	VDD_DREG	Power supply for on-chip voltage regulator.				
58	VSS	Ground.				
59	DECOUPLE	Decouple output for on-chip voltage regulator. An external capacitance of size $C_{DECOUPLE}$ is required at this pin.				
60	PE0		EBI_A07 #0/1/2	TIM3_CC0 #1 PCNT0_S0IN #1	U0_TX #1 I2C1_SDA #2	
61	PE1		EBI_A08 #0/1/2	TIM3_CC1 #1 PCNT0_S1IN #1	U0_RX #1 I2C1_SCL #2	
62	PE2	BU_VOUT	EBI_A09 #0	TIM3_CC2 #1	U1_TX #3	ACMP0_O #1
63	PE3	BU_STAT	EBI_A10 #0		U1_RX #3	ACMP1_O #1
64	PE4		EBI_A11 #0/1/2		US0_CS #1	
65	PE5		EBI_A12 #0/1/2		US0_CLK #1	
66	PE6		EBI_A13 #0/1/2		US0_RX #1	
67	PE7		EBI_A14 #0/1/2		US0_TX #1	
68	PC8	ACMP1_CH0	EBI_A15 #0/1/2	TIM2_CC0 #2	US0_CS #2	LES_CH8 #0
69	PC9	ACMP1_CH1	EBI_A09 #1/2	TIM2_CC1 #2	US0_CLK #2	LES_CH9 #0 GPIO_EM4WU2
70	PC10	ACMP1_CH2	EBI_A10 #1/2	TIM2_CC2 #2	US0_RX #2	LES_CH10 #0
71	PC11	ACMP1_CH3	EBI_ALE #1/2		US0_TX #2	LES_CH11 #0

LQFP100 Pin# and Name		Pin Alternate Functionality / Description				
Pin #	Pin Name	Analog	EBI	Timers	Communication	Other
72	USB_VREGI	Input to internal 3.3V USB regulator				
73	USB_VREGO	Output and decoupling for internal 3.3V USB regulator				
74	PF10				U1_TX #1 USB_DM	
75	PF11				U1_RX #1 USB_DP	
76	PF0			TIM0_CC0 #5 LE-TIM0_OUT0 #2	US1_CLK #2 LEU0_TX #3 I2C0_SDA #5	DBG_SWCLK #0/1/2/3
77	PF1			TIM0_CC1 #5 LE-TIM0_OUT1 #2	US1_CS #2 LEU0_RX #3 I2C0_SCL #5	DBG_SWDIO #0/1/2/3 GPIO_EM4WU3
78	PF2		EBI_ARDY #0/1/2	TIM0_CC2 #5	LEU0_TX #4	ACMP1_O #0 DBG_SWO #0 GPIO_EM4WU4
79	USB_VBUS	USB 5.0 V VBUS input.				
80	PF12				USB_ID	
81	PF5		EBI_REn #0/2	TIM0_CDTI2 #2/5	USB_VBUSEN #0	PRS_CH2 #1
82	IOVDD_5	Digital IO power supply 5.				
83	VSS	Ground.				
84	PF6		EBI_BL0 #0/1/2	TIM0_CC0 #2	U0_TX #0	
85	PF7		EBI_BL1 #0/1/2	TIM0_CC1 #2	U0_RX #0	
86	PF8		EBI_WEn #1	TIM0_CC2 #2		ETM_TCLK #1
87	PF9		EBI_REn #1			ETM_TD0 #1
88	PD9		EBI_CS0 #0/1/2			
89	PD10		EBI_CS1 #0/1/2			
90	PD11		EBI_CS2 #0/1/2			
91	PD12		EBI_CS3 #0/1/2			
92	PE8		EBI_AD00 #0/1/2	PCNT2_S0IN #1		PRS_CH3 #1
93	PE9		EBI_AD01 #0/1/2	PCNT2_S1IN #1		
94	PE10		EBI_AD02 #0/1/2	TIM1_CC0 #1	US0_TX #0	BOOT_TX
95	PE11		EBI_AD03 #0/1/2	TIM1_CC1 #1	US0_RX #0	LES_ALTEX5 #0 BOOT_RX
96	PE12		EBI_AD04 #0/1/2	TIM1_CC2 #1	US0_RX #3 US0_CLK #0 I2C0_SDA #6	CMU_CLK1 #2 LES_ALTEX6 #0
97	PE13		EBI_AD05 #0/1/2		US0_TX #3 US0_CS #0 I2C0_SCL #6	LES_ALTEX7 #0 ACMP0_O #0 GPIO_EM4WU5
98	PE14		EBI_AD06 #0/1/2	TIM3_CC0 #0	LEU0_TX #2	
99	PE15		EBI_AD07 #0/1/2	TIM3_CC1 #0	LEU0_RX #2	
100	PA15		EBI_AD08 #0/1/2	TIM3_CC2 #0		

5.9.2 Alternate Functionality Pinout

A wide selection of alternate functionality is available for multiplexing to various pins. This is shown in the following table. The table shows the name of the alternate functionality in the first column, followed by columns showing the possible LOCATION bitfield settings.

Note: Some functionality, such as analog interfaces, do not have alternate settings or a LOCATION bitfield. In these cases, the pinout is shown in the column corresponding to LOCATION 0.

Table 5.26. Alternate Functionality Overview

Alternate	LOCATION							
Functionality	0	1	2	3	4	5	6	Description
ACMP0_CH0	PC0							Analog comparator ACMP0, channel 0.
ACMP0_CH1	PC1							Analog comparator ACMP0, channel 1.
ACMP0_CH2	PC2							Analog comparator ACMP0, channel 2.
ACMP0_CH3	PC3							Analog comparator ACMP0, channel 3.
ACMP0_CH4	PC4							Analog comparator ACMP0, channel 4.
ACMP0_CH5	PC5							Analog comparator ACMP0, channel 5.
ACMP0_CH6	PC6							Analog comparator ACMP0, channel 6.
ACMP0_CH7	PC7							Analog comparator ACMP0, channel 7.
ACMP0_O	PE13	PE2	PD6					Analog comparator ACMP0, digital output.
ACMP1_CH0	PC8							Analog comparator ACMP1, channel 0.
ACMP1_CH1	PC9							Analog comparator ACMP1, channel 1.
ACMP1_CH2	PC10							Analog comparator ACMP1, channel 2.
ACMP1_CH3	PC11							Analog comparator ACMP1, channel 3.
ACMP1_O	PF2	PE3	PD7					Analog comparator ACMP1, digital output.
ADC0_CH0	PD0							Analog to digital converter ADC0, input channel number 0.
ADC0_CH1	PD1							Analog to digital converter ADC0, input channel number 1.
ADC0_CH2	PD2							Analog to digital converter ADC0, input channel number 2.
ADC0_CH3	PD3							Analog to digital converter ADC0, input channel number 3.
ADC0_CH4	PD4							Analog to digital converter ADC0, input channel number 4.
ADC0_CH5	PD5							Analog to digital converter ADC0, input channel number 5.
ADC0_CH6	PD6							Analog to digital converter ADC0, input channel number 6.
ADC0_CH7	PD7							Analog to digital converter ADC0, input channel number 7.
BOOT_RX	PE11							Bootloader RX.
BOOT_TX	PE10							Bootloader TX.

Alternate	LOCATION							
Functionality	0	1	2	3	4	5	6	Description
BU_STAT	PE3							Backup Power Domain status, whether or not the system is in backup mode
BU_VIN	PD8							Battery input for Backup Power Domain
BU_VOUT	PE2							Power output for Backup Power Domain
CMU_CLK0	PA2		PD7					Clock Management Unit, clock output number 0.
CMU_CLK1	PA1	PD8	PE12					Clock Management Unit, clock output number 1.
DAC0_OUT0 / OPAMP_OUT0	PB11							Digital to Analog Converter DAC0_OUT0 /OPAMP output channel number 0.
DAC0_OUT0ALT / OPAMP_OUT0ALT	PC0	PC1	PC2	PC3	PD0			Digital to Analog Converter DAC0_OUT0ALT / OPAMP alternative output for channel 0.
DAC0_OUT1 / OPAMP_OUT1	PB12							Digital to Analog Converter DAC0_OUT1 /OPAMP output channel number 1.
DAC0_OUT1ALT / OPAMP_OUT1ALT					PD1			Digital to Analog Converter DAC0_OUT1ALT / OPAMP alternative output for channel 1.
DBG_SWCLK	PF0	PF0	PF0	PF0				Debug-interface Serial Wire clock input. Note that this function is enabled to pin out of reset, and has a built-in pull down.
DBG_SWDIO	PF1	PF1	PF1	PF1				Debug-interface Serial Wire data input / output. Note that this function is enabled to pin out of reset, and has a built-in pull up.
DBG_SWO	PF2		PD1	PD2				Debug-interface Serial Wire viewer Output. Note that this function is not enabled after reset, and must be enabled by software to be used.
EBI_A00	PA12	PA12	PA12					External Bus Interface (EBI) address output pin 00.
EBI_A01	PA13	PA13	PA13					External Bus Interface (EBI) address output pin 01.
EBI_A02	PA14	PA14	PA14					External Bus Interface (EBI) address output pin 02.
EBI_A03	PB9	PB9	PB9					External Bus Interface (EBI) address output pin 03.
EBI_A04	PB10	PB10	PB10					External Bus Interface (EBI) address output pin 04.
EBI_A05	PC6	PC6	PC6					External Bus Interface (EBI) address output pin 05.
EBI_A06	PC7	PC7	PC7					External Bus Interface (EBI) address output pin 06.
EBI_A07	PE0	PE0	PE0					External Bus Interface (EBI) address output pin 07.
EBI_A08	PE1	PE1	PE1					External Bus Interface (EBI) address output pin 08.
EBI_A09	PE2	PC9	PC9					External Bus Interface (EBI) address output pin 09.
EBI_A10	PE3	PC10	PC10					External Bus Interface (EBI) address output pin 10.
EBI_A11	PE4	PE4	PE4					External Bus Interface (EBI) address output pin 11.
EBI_A12	PE5	PE5	PE5					External Bus Interface (EBI) address output pin 12.
EBI_A13	PE6	PE6	PE6					External Bus Interface (EBI) address output pin 13.
EBI_A14	PE7	PE7	PE7					External Bus Interface (EBI) address output pin 14.

Alternate	LOCATION							
Functionality	0	1	2	3	4	5	6	Description
EBI_A15	PC8	PC8	PC8					External Bus Interface (EBI) address output pin 15.
EBI_A16	PB0	PB0	PB0					External Bus Interface (EBI) address output pin 16.
EBI_A17	PB1	PB1	PB1					External Bus Interface (EBI) address output pin 17.
EBI_A18	PB2	PB2	PB2					External Bus Interface (EBI) address output pin 18.
EBI_A19	PB3	PB3	PB3					External Bus Interface (EBI) address output pin 19.
EBI_A20	PB4	PB4	PB4					External Bus Interface (EBI) address output pin 20.
EBI_A21	PB5	PB5	PB5					External Bus Interface (EBI) address output pin 21.
EBI_A22	PB6	PB6	PB6					External Bus Interface (EBI) address output pin 22.
EBI_A23	PC0	PC0	PC0					External Bus Interface (EBI) address output pin 23.
EBI_A24	PC1	PC1	PC1					External Bus Interface (EBI) address output pin 24.
EBI_A25	PC2	PC2	PC2					External Bus Interface (EBI) address output pin 25.
EBI_A26	PC4	PC4	PC4					External Bus Interface (EBI) address output pin 26.
EBI_A27	PD2	PD2	PD2					External Bus Interface (EBI) address output pin 27.
EBI_AD00	PE8	PE8	PE8					External Bus Interface (EBI) address and data input / output pin 00.
EBI_AD01	PE9	PE9	PE9					External Bus Interface (EBI) address and data input / output pin 01.
EBI_AD02	PE10	PE10	PE10					External Bus Interface (EBI) address and data input / output pin 02.
EBI_AD03	PE11	PE11	PE11					External Bus Interface (EBI) address and data input / output pin 03.
EBI_AD04	PE12	PE12	PE12					External Bus Interface (EBI) address and data input / output pin 04.
EBI_AD05	PE13	PE13	PE13					External Bus Interface (EBI) address and data input / output pin 05.
EBI_AD06	PE14	PE14	PE14					External Bus Interface (EBI) address and data input / output pin 06.
EBI_AD07	PE15	PE15	PE15					External Bus Interface (EBI) address and data input / output pin 07.
EBI_AD08	PA15	PA15	PA15					External Bus Interface (EBI) address and data input / output pin 08.
EBI_AD09	PA0	PA0	PA0					External Bus Interface (EBI) address and data input / output pin 09.
EBI_AD10	PA1	PA1	PA1					External Bus Interface (EBI) address and data input / output pin 10.
EBI_AD11	PA2	PA2	PA2					External Bus Interface (EBI) address and data input / output pin 11.
EBI_AD12	PA3	PA3	PA3					External Bus Interface (EBI) address and data input / output pin 12.
EBI_AD13	PA4	PA4	PA4					External Bus Interface (EBI) address and data input / output pin 13.

Alternate	LOCATION							
Functionality	0	1	2	3	4	5	6	Description
EBI_AD14	PA5	PA5	PA5					External Bus Interface (EBI) address and data input / output pin 14.
EBI_AD15	PA6	PA6	PA6					External Bus Interface (EBI) address and data input / output pin 15.
EBI_ALE		PC11	PC11					External Bus Interface (EBI) Address Latch Enable output.
EBI_ARDY	PF2	PF2	PF2					External Bus Interface (EBI) Hardware Ready Control input.
EBI_BL0	PF6	PF6	PF6					External Bus Interface (EBI) Byte Lane/Enable pin 0.
EBI_BL1	PF7	PF7	PF7					External Bus Interface (EBI) Byte Lane/Enable pin 1.
EBI_CS0	PD9	PD9	PD9					External Bus Interface (EBI) Chip Select output 0.
EBI_CS1	PD10	PD10	PD10					External Bus Interface (EBI) Chip Select output 1.
EBI_CS2	PD11	PD11	PD11					External Bus Interface (EBI) Chip Select output 2.
EBI_CS3	PD12	PD12	PD12					External Bus Interface (EBI) Chip Select output 3.
EBI_CSTFT	PA7	PA7	PA7					External Bus Interface (EBI) Chip Select output TFT.
EBI_DCLK	PA8	PA8	PA8					External Bus Interface (EBI) TFT Dot Clock pin.
EBI_DTEN	PA9	PA9	PA9					External Bus Interface (EBI) TFT Data Enable pin.
EBI_HSNC	PA11	PA11	PA11					External Bus Interface (EBI) TFT Horizontal Synchronization pin.
EBI_NANDREn	PC3	PC3	PC3					External Bus Interface (EBI) NAND Read Enable output.
EBI_NANDWEn	PC5	PC5	PC5					External Bus Interface (EBI) NAND Write Enable output.
EBI_REn	PF5	PF9	PF5					External Bus Interface (EBI) Read Enable output.
EBI_VSNC	PA10	PA10	PA10					External Bus Interface (EBI) TFT Vertical Synchronization pin.
EBI_WEn		PF8						External Bus Interface (EBI) Write Enable output.
ETM_TCLK	PD7	PF8	PC6	PA6				Embedded Trace Module ETM clock .
ETM_TD0	PD6	PF9	PC7	PA2				Embedded Trace Module ETM data 0.
ETM_TD1	PD3		PD3	PA3				Embedded Trace Module ETM data 1.
ETM_TD2	PD4		PD4	PA4				Embedded Trace Module ETM data 2.
ETM_TD3	PD5		PD5	PA5				Embedded Trace Module ETM data 3.
GPIO_EM4WU0	PA0							Pin can be used to wake the system up from EM4
GPIO_EM4WU1	PA6							Pin can be used to wake the system up from EM4
GPIO_EM4WU2	PC9							Pin can be used to wake the system up from EM4
GPIO_EM4WU3	PF1							Pin can be used to wake the system up from EM4
GPIO_EM4WU4	PF2							Pin can be used to wake the system up from EM4
GPIO_EM4WU5	PE13							Pin can be used to wake the system up from EM4

Alternate	LOCATION							
Functionality	0	1	2	3	4	5	6	Description
HFXTAL_N	PB14							High Frequency Crystal negative pin. Also used as external optional clock input pin.
HFXTAL_P	PB13							High Frequency Crystal positive pin.
I2C0_SCL	PA1	PD7	PC7		PC1	PF1	PE13	I2C0 Serial Clock Line input / output.
I2C0_SDA	PA0	PD6	PC6		PC0	PF0	PE12	I2C0 Serial Data input / output.
I2C1_SCL	PC5	PB12	PE1					I2C1 Serial Clock Line input / output.
I2C1_SDA	PC4	PB11	PE0					I2C1 Serial Data input / output.
LES_ALTEX0	PD6							LESENSE alternate exite output 0.
LES_ALTEX1	PD7							LESENSE alternate exite output 1.
LES_ALTEX2	PA3							LESENSE alternate exite output 2.
LES_ALTEX3	PA4							LESENSE alternate exite output 3.
LES_ALTEX4	PA5							LESENSE alternate exite output 4.
LES_ALTEX5	PE11							LESENSE alternate exite output 5.
LES_ALTEX6	PE12							LESENSE alternate exite output 6.
LES_ALTEX7	PE13							LESENSE alternate exite output 7.
LES_CH0	PC0							LESENSE channel 0.
LES_CH1	PC1							LESENSE channel 1.
LES_CH2	PC2							LESENSE channel 2.
LES_CH3	PC3							LESENSE channel 3.
LES_CH4	PC4							LESENSE channel 4.
LES_CH5	PC5							LESENSE channel 5.
LES_CH6	PC6							LESENSE channel 6.
LES_CH7	PC7							LESENSE channel 7.
LES_CH8	PC8							LESENSE channel 8.
LES_CH9	PC9							LESENSE channel 9.
LES_CH10	PC10							LESENSE channel 10.
LES_CH11	PC11							LESENSE channel 11.
LETIM0_OUT0	PD6	PB11	PF0	PC4				Low Energy Timer LETIM0, output channel 0.
LETIM0_OUT1	PD7	PB12	PF1	PC5				Low Energy Timer LETIM0, output channel 1.
LEU0_RX	PD5	PB14	PE15	PF1	PA0			LEUART0 Receive input.
LEU0_TX	PD4	PB13	PE14	PF0	PF2			LEUART0 Transmit output. Also used as receive input in half duplex communication.
LEU1_RX	PC7	PA6						LEUART1 Receive input.
LEU1_TX	PC6	PA5						LEUART1 Transmit output. Also used as receive input in half duplex communication.
LFXTAL_N	PB8							Low Frequency Crystal (typically 32.768 kHz) negative pin. Also used as an optional external clock input pin.

Alternate	LOCATION							
Functionality	0	1	2	3	4	5	6	Description
LFXTAL_P	PB7							Low Frequency Crystal (typically 32.768 kHz) positive pin.
OPAMP_N0 / DAC0_N0	PC5							Operational Amplifier 0 external negative input.
OPAMP_N1 / DAC0_N1	PD7							Operational Amplifier 1 external negative input.
OPAMP_N2	PD3							Operational Amplifier 2 external negative input.
OPAMP_OUT2	PD5	PD0						Operational Amplifier 2 output.
OPAMP_P0 / DAC0_P0	PC4							Operational Amplifier 0 external positive input.
OPAMP_P1 / DAC0_P1	PD6							Operational Amplifier 1 external positive input.
OPAMP_P2	PD4							Operational Amplifier 2 external positive input.
PCNT0_S0IN		PE0	PC0	PD6				Pulse Counter PCNT0 input number 0.
PCNT0_S1IN		PE1	PC1	PD7				Pulse Counter PCNT0 input number 1.
PCNT1_S0IN	PC4	PB3						Pulse Counter PCNT1 input number 0.
PCNT1_S1IN	PC5	PB4						Pulse Counter PCNT1 input number 1.
PCNT2_S0IN	PD0	PE8						Pulse Counter PCNT2 input number 0.
PCNT2_S1IN	PD1	PE9						Pulse Counter PCNT2 input number 1.
PRS_CH0	PA0							Peripheral Reflex System PRS, channel 0.
PRS_CH1	PA1							Peripheral Reflex System PRS, channel 1.
PRS_CH2	PC0	PF5						Peripheral Reflex System PRS, channel 2.
PRS_CH3	PC1	PE8						Peripheral Reflex System PRS, channel 3.
TIM0_CC0	PA0	PA0	PF6	PD1	PA0	PF0		Timer 0 Capture Compare input / output channel 0.
TIM0_CC1	PA1	PA1	PF7	PD2	PC0	PF1		Timer 0 Capture Compare input / output channel 1.
TIM0_CC2	PA2	PA2	PF8	PD3	PC1	PF2		Timer 0 Capture Compare input / output channel 2.
TIM0_CDTI0	PA3				PC2			Timer 0 Complimentary Dead Time Insertion channel 0.
TIM0_CDTI1	PA4				PC3			Timer 0 Complimentary Dead Time Insertion channel 1.
TIM0_CDTI2	PA5		PF5		PC4	PF5		Timer 0 Complimentary Dead Time Insertion channel 2.
TIM1_CC0		PE10	PB0	PB7	PD6			Timer 1 Capture Compare input / output channel 0.
TIM1_CC1		PE11	PB1	PB8	PD7			Timer 1 Capture Compare input / output channel 1.
TIM1_CC2		PE12	PB2	PB11				Timer 1 Capture Compare input / output channel 2.
TIM2_CC0	PA8	PA12	PC8					Timer 2 Capture Compare input / output channel 0.
TIM2_CC1	PA9	PA13	PC9					Timer 2 Capture Compare input / output channel 1.
TIM2_CC2	PA10	PA14	PC10					Timer 2 Capture Compare input / output channel 2.
TIM3_CC0	PE14	PE0						Timer 3 Capture Compare input / output channel 0.

Alternate	LOCATION							
Functionality	0	1	2	3	4	5	6	Description
TIM3_CC1	PE15	PE1						Timer 3 Capture Compare input / output channel 1.
TIM3_CC2	PA15	PE2						Timer 3 Capture Compare input / output channel 2.
U0_RX	PF7	PE1	PA4					UART0 Receive input.
U0_TX	PF6	PE0	PA3					UART0 Transmit output. Also used as receive input in half duplex communication.
U1_RX		PF11	PB10	PE3				UART1 Receive input.
U1_TX		PF10	PB9	PE2				UART1 Transmit output. Also used as receive input in half duplex communication.
US0_CLK	PE12	PE5	PC9		PB13	PB13		USART0 clock input / output.
US0_CS	PE13	PE4	PC8		PB14	PB14		USART0 chip select input / output.
US0_RX	PE11	PE6	PC10	PE12	PB8	PC1		USART0 Asynchronous Receive. USART0 Synchronous mode Main Input / Secondary Output (MISO).
US0_TX	PE10	PE7	PC11	PE13	PB7	PC0		USART0 Asynchronous Transmit.Also used as receive input in half duplex communication. USART0 Synchronous mode Main Output / Secondary Input (MOSI).
US1_CLK	PB7	PD2	PF0					USART1 clock input / output.
US1_CS	PB8	PD3	PF1					USART1 chip select input / output.
US1_RX	PC1	PD1	PD6					USART1 Asynchronous Receive. USART1 Synchronous mode Main Input / Secondary Output (MISO).
US1_TX	PC0	PD0	PD7					USART1 Asynchronous Transmit.Also used as receive input in half duplex communication. USART1 Synchronous mode Main Output / Secondary Input (MOSI).
US2_CLK	PC4	PB5						USART2 clock input / output.
US2_CS	PC5	PB6						USART2 chip select input / output.
US2_RX	PC3	PB4						USART2 Asynchronous Receive. USART2 Synchronous mode Main Input / Secondary Output (MISO).
US2_TX	PC2	PB3						USART2 Asynchronous Transmit.Also used as receive input in half duplex communication. USART2 Synchronous mode Main Output / Secondary Input (MOSI).
USB_DM	PF10							USB D- pin.
USB_DMPU	PD2							USB D- Pullup control.
USB_DP	PF11							USB D+ pin.
USB_ID	PF12							USB ID pin. Used in OTG mode.
USB_VBUS	USB_VBUS							USB 5 V VBUS input.

Alternate	LOCATION							
Functionality	0	1	2	3	4	5	6	Description
USB_VBUSEN	PF5							USB 5 V VBUS enable.
USB_VREGI	USB_VREGI							USB Input to internal 3.3 V regulator
USB_VREGO	USB_VREGO							USB Decoupling for internal 3.3 V USB regulator and regulator output

5.9.3 GPIO Pinout Overview

The specific GPIO pins available in EFM32WG380 are shown in the following table. Each GPIO port is organized as 16-bit ports indicated by letters A through F, and the individual pin on this port is indicated by a number from 15 down to 0.

Table 5.27. GPIO Pinout

Port	Pin 15	Pin 14	Pin 13	Pin 12	Pin 11	Pin 10	Pin 9	Pin 8	Pin 7	Pin 6	Pin 5	Pin 4	Pin 3	Pin 2	Pin 1	Pin 0
Port A	PA15	PA14	PA13	PA12	PA11	PA10	PA9	PA8	PA7	PA6	PA5	PA4	PA3	PA2	PA1	PA0
Port B	—	PB14	PB13	PB12	PB11	PB10	PB9	PB8	PB7	PB6	PB5	PB4	PB3	PB2	PB1	PB0
Port C	—	—	—	—	PC11	PC10	PC9	PC8	PC7	PC6	PC5	PC4	PC3	PC2	PC1	PC0
Port D	—	—	—	PD12	PD11	PD10	PD9	PD8	PD7	PD6	PD5	PD4	PD3	PD2	PD1	PD0
Port E	PE15	PE14	PE13	PE12	PE11	PE10	PE9	PE8	PE7	PE6	PE5	PE4	PE3	PE2	PE1	PE0
Port F	—	—	—	PF12	PF11	PF10	PF9	PF8	PF7	PF6	PF5	—	—	PF2	PF1	PF0

5.9.4 Opamp Pinout Overview

The specific opamp terminals available in EFM32WG380 is shown in the following figure.

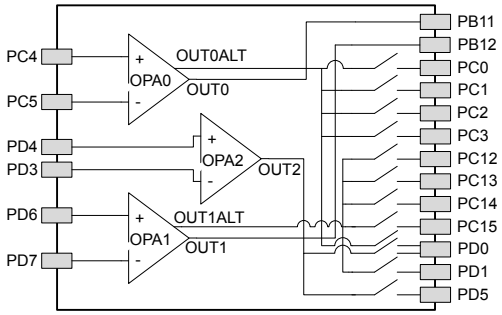

Figure 5.18. Opamp Pinout

5.10 EFM32WG390 (BGA112)

5.10.1 Pinout

The EFM32WG390 pinout is shown in the following figure and table. Alternate locations are denoted by "#" followed by the location number (Multiple locations on the same pin are split with "/"). Alternate locations can be configured in the LOCATION bitfield in the *_ROUTE register in the module in question.

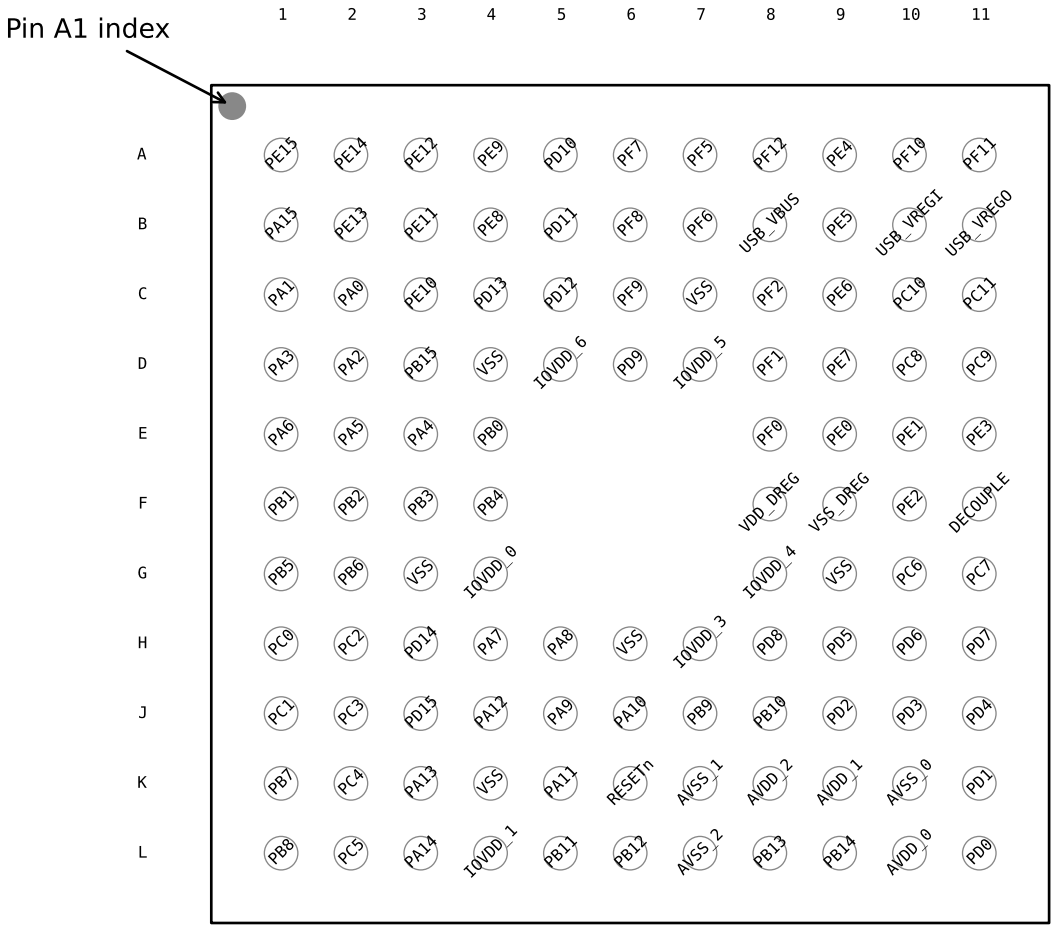

Figure 5.19. EFM32WG390 Pinout (top view, not to scale)

Table 5.28. Device Pinout

BGA112 Pin# and Name		Pin Alternate Functionality / Description				
Pin #	**Pin Name**	**Analog**	**EBI**	**Timers**	**Communication**	**Other**
A1	PE15		EBI_AD07 #0/1/2	TIM3_CC1 #0	LEU0_RX #2	
A2	PE14		EBI_AD06 #0/1/2	TIM3_CC0 #0	LEU0_TX #2	
A3	PE12		EBI_AD04 #0/1/2	TIM1_CC2 #1	US0_RX #3 US0_CLK #0 I2C0_SDA #6	CMU_CLK1 #2 LES_ALTEX6 #0

BGA112 Pin# and Name		Pin Alternate Functionality / Description				
Pin #	Pin Name	Analog	EBI	Timers	Communication	Other
A4	PE9		EBI_AD01 #0/1/2	PCNT2_S1IN #1		
A5	PD10		EBI_CS1 #0/1/2			
A6	PF7		EBI_BL1 #0/1/2	TIM0_CC1 #2	U0_RX #0	
A7	PF5		EBI_REn #0/2	TIM0_CDTI2 #2/5	USB_VBUSEN #0	PRS_CH2 #1
A8	PF12				USB_ID	
A9	PE4		EBI_A11 #0/1/2		US0_CS #1	
A10	PF10				U1_TX #1 USB_DM	
A11	PF11				U1_RX #1 USB_DP	
B1	PA15		EBI_AD08 #0/1/2	TIM3_CC2 #0		
B2	PE13		EBI_AD05 #0/1/2		US0_TX #3 US0_CS #0 I2C0_SCL #6	LES_ALTEX7 #0 ACMP0_O #0 GPIO_EM4WU5
B3	PE11		EBI_AD03 #0/1/2	TIM1_CC1 #1	US0_RX #0	LES_ALTEX5 #0 BOOT_RX
B4	PE8		EBI_AD00 #0/1/2	PCNT2_S0IN #1		PRS_CH3 #1
B5	PD11		EBI_CS2 #0/1/2			
B6	PF8		EBI_WEn #1	TIM0_CC2 #2		ETM_TCLK #1
B7	PF6		EBI_BL0 #0/1/2	TIM0_CC0 #2	U0_TX #0	
B8	USB_VBUS	USB 5.0 V VBUS input.				
B9	PE5		EBI_A12 #0/1/2		US0_CLK #1	
B10	USB_VREGI	Input to internal 3.3 V USB regulator				
B11	USB_VREGO	Output and decoupling for internal 3.3 V USB regulator				
C1	PA1		EBI_AD10 #0/1/2	TIM0_CC1 #0/1	I2C0_SCL #0	CMU_CLK1 #0 PRS_CH1 #0
C2	PA0		EBI_AD09 #0/1/2	TIM0_CC0 #0/1/4	LEU0_RX #4 I2C0_SDA #0	PRS_CH0 #0 GPIO_EM4WU0
C3	PE10		EBI_AD02 #0/1/2	TIM1_CC0 #1	US0_TX #0	BOOT_TX
C4	PD13					ETM_TD1 #1
C5	PD12		EBI_CS3 #0/1/2			
C6	PF9		EBI_REn #1			ETM_TD0 #1
C7	VSS	Ground.				
C8	PF2		EBI_ARDY #0/1/2	TIM0_CC2 #5	LEU0_TX #4	ACMP1_O #0 DBG_SWO #0 GPIO_EM4WU4
C9	PE6		EBI_A13 #0/1/2		US0_RX #1	
C10	PC10	ACMP1_CH2	EBI_A10 #1/2	TIM2_CC2 #2	US0_RX #2	LES_CH10 #0
C11	PC11	ACMP1_CH3	EBI_ALE #1/2		US0_TX #2	LES_CH11 #0
D1	PA3		EBI_AD12 #0/1/2	TIM0_CDTI0 #0	U0_TX #2	LES_ALTEX2 #0 ETM_TD1 #3

BGA112 Pin# and Name		Pin Alternate Functionality / Description				
Pin #	Pin Name	Analog	EBI	Timers	Communication	Other
D2	PA2		EBI_AD11 #0/1/2	TIM0_CC2 #0/1		CMU_CLK0 #0 ETM_TD0 #3
D3	PB15					ETM_TD2 #1
D4	VSS	Ground.				
D5	IOVDD_6	Digital IO power supply 6.				
D6	PD9		EBI_CS0 #0/1/2			
D7	IOVDD_5	Digital IO power supply 5.				
D8	PF1			TIM0_CC1 #5 LE-TIM0_OUT1 #2	US1_CS #2 LEU0_RX #3 I2C0_SCL #5	DBG_SWDIO #0/1/2/3 GPIO_EM4WU3
D9	PE7		EBI_A14 #0/1/2		US0_TX #1	
D10	PC8	ACMP1_CH0	EBI_A15 #0/1/2	TIM2_CC0 #2	US0_CS #2	LES_CH8 #0
D11	PC9	ACMP1_CH1	EBI_A09 #1/2	TIM2_CC1 #2	US0_CLK #2	LES_CH9 #0 GPIO_EM4WU2
E1	PA6		EBI_AD15 #0/1/2		LEU1_RX #1	ETM_TCLK #3 GPIO_EM4WU1
E2	PA5		EBI_AD14 #0/1/2	TIM0_CDTI2 #0	LEU1_TX #1	LES_ALTEX4 #0 ETM_TD3 #3
E3	PA4		EBI_AD13 #0/1/2	TIM0_CDTI1 #0	U0_RX #2	LES_ALTEX3 #0 ETM_TD2 #3
E4	PB0		EBI_A16 #0/1/2	TIM1_CC0 #2		
E8	PF0			TIM0_CC0 #5 LE-TIM0_OUT0 #2	US1_CLK #2 LEU0_TX #3 I2C0_SDA #5	DBG_SWCLK #0/1/2/3
E9	PE0		EBI_A07 #0/1/2	TIM3_CC0 #1 PCNT0_S0IN #1	U0_TX #1 I2C1_SDA #2	
E10	PE1		EBI_A08 #0/1/2	TIM3_CC1 #1 PCNT0_S1IN #1	U0_RX #1 I2C1_SCL #2	
E11	PE3	BU_STAT	EBI_A10 #0		U1_RX #3	ACMP1_O #1
F1	PB1		EBI_A17 #0/1/2	TIM1_CC1 #2		
F2	PB2		EBI_A18 #0/1/2	TIM1_CC2 #2		
F3	PB3		EBI_A19 #0/1/2	PCNT1_S0IN #1	US2_TX #1	
F4	PB4		EBI_A20 #0/1/2	PCNT1_S1IN #1	US2_RX #1	
F8	VDD_DREG	Power supply for on-chip voltage regulator.				
F9	VSS_DREG	Ground for on-chip voltage regulator.				
F10	PE2	BU_VOUT	EBI_A09 #0	TIM3_CC2 #1	U1_TX #3	ACMP0_O #1
F11	DECOUPLE	Decouple output for on-chip voltage regulator. An external capacitance of size $C_{DECOUPLE}$ is required at this pin.				
G1	PB5		EBI_A21 #0/1/2		US2_CLK #1	
G2	PB6		EBI_A22 #0/1/2		US2_CS #1	

BGA112 Pin# and Name		Pin Alternate Functionality / Description				
Pin #	Pin Name	Analog	EBI	Timers	Communication	Other
G3	VSS	Ground.				
G4	IOVDD_0	Digital IO power supply 0.				
G8	IOVDD_4	Digital IO power supply 4.				
G9	VSS	Ground.				
G10	PC6	ACMP0_CH6	EBI_A05 #0/1/2		LEU1_TX #0 I2C0_SDA #2	LES_CH6 #0 ETM_TCLK #2
G11	PC7	ACMP0_CH7	EBI_A06 #0/1/2		LEU1_RX #0 I2C0_SCL #2	LES_CH7 #0 ETM_TD0 #2
H1	PC0	ACMP0_CH0 DAC0_OUT0ALT #0/ OPAMP_OUT0ALT	EBI_A23 #0/1/2	TIM0_CC1 #4 PCNT0_S0IN #2	US0_TX #5 US1_TX #0 I2C0_SDA #4	LES_CH0 #0 PRS_CH2 #0
H2	PC2	ACMP0_CH2 DAC0_OUT0ALT #2/ OPAMP_OUT0ALT	EBI_A25 #0/1/2	TIM0_CDTI0 #4	US2_TX #0	LES_CH2 #0
H3	PD14				I2C0_SDA #3	
H4	PA7		EBI_CSTFT #0/1/2			
H5	PA8		EBI_DCLK #0/1/2	TIM2_CC0 #0		
H6	VSS	Ground.				
H7	IOVDD_3	Digital IO power supply 3.				
H8	PD8	BU_VIN				CMU_CLK1 #1
H9	PD5	ADC0_CH5 OPAMP_OUT2 #0			LEU0_RX #0	ETM_TD3 #0/2
H10	PD6	ADC0_CH6 / DAC0_P1 / OPAMP_P1		TIM1_CC0 #4 LE-TIM0_OUT0 #0 PCNT0_S0IN #3	US1_RX #2 I2C0_SDA #1	LES_ALTEX0 #0 ACMP0_O #2 ETM_TD0 #0
H11	PD7	ADC0_CH7 / DAC0_N1 / OPAMP_N1		TIM1_CC1 #4 LE-TIM0_OUT1 #0 PCNT0_S1IN #3	US1_TX #2 I2C0_SCL #1	CMU_CLK0 #2 LES_ALTEX1 #0 ACMP1_O #2 ETM_TCLK #0
J1	PC1	ACMP0_CH1 DAC0_OUT0ALT #1/ OPAMP_OUT0ALT	EBI_A24 #0/1/2	TIM0_CC2 #4 PCNT0_S1IN #2	US0_RX #5 US1_RX #0 I2C0_SCL #4	LES_CH1 #0 PRS_CH3 #0
J2	PC3	ACMP0_CH3 DAC0_OUT0ALT #3/ OPAMP_OUT0ALT	EBI_NANDREn #0/1/2	TIM0_CDTI1 #4	US2_RX #0	LES_CH3 #0
J3	PD15				I2C0_SCL #3	
J4	PA12		EBI_A00 #0/1/2	TIM2_CC0 #1		
J5	PA9		EBI_DTEN #0/1/2	TIM2_CC1 #0		
J6	PA10		EBI_VSNC #0/1/2	TIM2_CC2 #0		
J7	PB9		EBI_A03 #0/1/2		U1_TX #2	

BGA112 Pin# and Name		Pin Alternate Functionality / Description				
Pin #	Pin Name	Analog	EBI	Timers	Communication	Other
J8	PB10		EBI_A04 #0/1/2		U1_RX #2	
J9	PD2	ADC0_CH2	EBI_A27 #0/1/2	TIM0_CC1 #3	USB_DMPU #0 US1_CLK #1	DBG_SWO #3
J10	PD3	ADC0_CH3 OPAMP_N2		TIM0_CC2 #3	US1_CS #1	ETM_TD1 #0/2
J11	PD4	ADC0_CH4 OPAMP_P2			LEU0_TX #0	ETM_TD2 #0/2
K1	PB7	LFXTAL_P		TIM1_CC0 #3	US0_TX #4 US1_CLK #0	
K2	PC4	ACMP0_CH4 / DAC0_P0 / OPAMP_P0	EBI_A26 #0/1/2	TIM0_CDTI2 #4 LE-TIM0_OUT0 #3 PCNT1_S0IN #0	US2_CLK #0 I2C1_SDA #0	LES_CH4 #0
K3	PA13		EBI_A01 #0/1/2	TIM2_CC1 #1		
K4	VSS	Ground.				
K5	PA11		EBI_HSNC #0/1/2			
K6	RESETn	Reset input, active low. To apply an external reset source to this pin, it is required to only drive this pin low during reset, and let the internal pull-up ensure that reset is released.				
K7	AVSS_1	Analog ground 1.				
K8	AVDD_2	Analog power supply 2.				
K9	AVDD_1	Analog power supply 1.				
K10	AVSS_0	Analog ground 0.				
K11	PD1	ADC0_CH1 DAC0_OUT1ALT #4/ OPAMP_OUT1ALT		TIM0_CC0 #3 PCNT2_S1IN #0	US1_RX #1	DBG_SWO #2
L1	PB8	LFXTAL_N		TIM1_CC1 #3	US0_RX #4 US1_CS #0	
L2	PC5	ACMP0_CH5 / DAC0_N0 / OPAMP_N0	EBI_NANDWEn #0/1/2	LETIM0_OUT1 #3 PCNT1_S1IN #0	US2_CS #0 I2C1_SCL #0	LES_CH5 #0
L3	PA14		EBI_A02 #0/1/2	TIM2_CC2 #1		
L4	IOVDD_1	Digital IO power supply 1.				
L5	PB11	DAC0_OUT0 / OPAMP_OUT0		TIM1_CC2 #3 LE-TIM0_OUT0 #1	I2C1_SDA #1	
L6	PB12	DAC0_OUT1 / OPAMP_OUT1		LETIM0_OUT1 #1	I2C1_SCL #1	
L7	AVSS_2	Analog ground 2.				
L8	PB13	HFXTAL_P			US0_CLK #4/5 LEU0_TX #1	
L9	PB14	HFXTAL_N			US0_CS #4/5 LEU0_RX #1	
L10	AVDD_0	Analog power supply 0.				

BGA112 Pin# and Name		Pin Alternate Functionality / Description				
Pin #	Pin Name	Analog	EBI	Timers	Communication	Other
L11	PD0	ADC0_CH0 DAC0_OUT0ALT #4/ OPAMP_OUT0ALT OPAMP_OUT2 #1		PCNT2_S0IN #0	US1_TX #1	

5.10.2 Alternate Functionality Pinout

A wide selection of alternate functionality is available for multiplexing to various pins. This is shown in the following table. The table shows the name of the alternate functionality in the first column, followed by columns showing the possible LOCATION bitfield settings.

Note: Some functionality, such as analog interfaces, do not have alternate settings or a LOCATION bitfield. In these cases, the pinout is shown in the column corresponding to LOCATION 0.

Table 5.29. Alternate Functionality Overview

Alternate	LOCATION							
Functionality	0	1	2	3	4	5	6	Description
ACMP0_CH0	PC0							Analog comparator ACMP0, channel 0.
ACMP0_CH1	PC1							Analog comparator ACMP0, channel 1.
ACMP0_CH2	PC2							Analog comparator ACMP0, channel 2.
ACMP0_CH3	PC3							Analog comparator ACMP0, channel 3.
ACMP0_CH4	PC4							Analog comparator ACMP0, channel 4.
ACMP0_CH5	PC5							Analog comparator ACMP0, channel 5.
ACMP0_CH6	PC6							Analog comparator ACMP0, channel 6.
ACMP0_CH7	PC7							Analog comparator ACMP0, channel 7.
ACMP0_O	PE13	PE2	PD6					Analog comparator ACMP0, digital output.
ACMP1_CH0	PC8							Analog comparator ACMP1, channel 0.
ACMP1_CH1	PC9							Analog comparator ACMP1, channel 1.
ACMP1_CH2	PC10							Analog comparator ACMP1, channel 2.
ACMP1_CH3	PC11							Analog comparator ACMP1, channel 3.
ACMP1_O	PF2	PE3	PD7					Analog comparator ACMP1, digital output.
ADC0_CH0	PD0							Analog to digital converter ADC0, input channel number 0.
ADC0_CH1	PD1							Analog to digital converter ADC0, input channel number 1.
ADC0_CH2	PD2							Analog to digital converter ADC0, input channel number 2.
ADC0_CH3	PD3							Analog to digital converter ADC0, input channel number 3.
ADC0_CH4	PD4							Analog to digital converter ADC0, input channel number 4.
ADC0_CH5	PD5							Analog to digital converter ADC0, input channel number 5.
ADC0_CH6	PD6							Analog to digital converter ADC0, input channel number 6.
ADC0_CH7	PD7							Analog to digital converter ADC0, input channel number 7.
BOOT_RX	PE11							Bootloader RX.
BOOT_TX	PE10							Bootloader TX.

Alternate	LOCATION							
Functionality	0	1	2	3	4	5	6	Description
BU_STAT	PE3							Backup Power Domain status, whether or not the system is in backup mode
BU_VIN	PD8							Battery input for Backup Power Domain
BU_VOUT	PE2							Power output for Backup Power Domain
CMU_CLK0	PA2		PD7					Clock Management Unit, clock output number 0.
CMU_CLK1	PA1	PD8	PE12					Clock Management Unit, clock output number 1.
DAC0_OUT0 / OPAMP_OUT0	PB11							Digital to Analog Converter DAC0_OUT0 /OPAMP output channel number 0.
DAC0_OUT0ALT / OPAMP_OUT0ALT	PC0	PC1	PC2	PC3	PD0			Digital to Analog Converter DAC0_OUT0ALT / OPAMP alternative output for channel 0.
DAC0_OUT1 / OPAMP_OUT1	PB12							Digital to Analog Converter DAC0_OUT1 /OPAMP output channel number 1.
DAC0_OUT1ALT / OPAMP_OUT1ALT					PD1			Digital to Analog Converter DAC0_OUT1ALT / OPAMP alternative output for channel 1.
DBG_SWCLK	PF0	PF0	PF0	PF0				Debug-interface Serial Wire clock input. Note that this function is enabled to pin out of reset, and has a built-in pull down.
DBG_SWDIO	PF1	PF1	PF1	PF1				Debug-interface Serial Wire data input / output. Note that this function is enabled to pin out of reset, and has a built-in pull up.
DBG_SWO	PF2		PD1	PD2				Debug-interface Serial Wire viewer Output. Note that this function is not enabled after reset, and must be enabled by software to be used.
EBI_A00	PA12	PA12	PA12					External Bus Interface (EBI) address output pin 00.
EBI_A01	PA13	PA13	PA13					External Bus Interface (EBI) address output pin 01.
EBI_A02	PA14	PA14	PA14					External Bus Interface (EBI) address output pin 02.
EBI_A03	PB9	PB9	PB9					External Bus Interface (EBI) address output pin 03.
EBI_A04	PB10	PB10	PB10					External Bus Interface (EBI) address output pin 04.
EBI_A05	PC6	PC6	PC6					External Bus Interface (EBI) address output pin 05.
EBI_A06	PC7	PC7	PC7					External Bus Interface (EBI) address output pin 06.
EBI_A07	PE0	PE0	PE0					External Bus Interface (EBI) address output pin 07.
EBI_A08	PE1	PE1	PE1					External Bus Interface (EBI) address output pin 08.
EBI_A09	PE2	PC9	PC9					External Bus Interface (EBI) address output pin 09.
EBI_A10	PE3	PC10	PC10					External Bus Interface (EBI) address output pin 10.
EBI_A11	PE4	PE4	PE4					External Bus Interface (EBI) address output pin 11.
EBI_A12	PE5	PE5	PE5					External Bus Interface (EBI) address output pin 12.
EBI_A13	PE6	PE6	PE6					External Bus Interface (EBI) address output pin 13.
EBI_A14	PE7	PE7	PE7					External Bus Interface (EBI) address output pin 14.

Alternate	LOCATION							
Functionality	0	1	2	3	4	5	6	Description
EBI_A15	PC8	PC8	PC8					External Bus Interface (EBI) address output pin 15.
EBI_A16	PB0	PB0	PB0					External Bus Interface (EBI) address output pin 16.
EBI_A17	PB1	PB1	PB1					External Bus Interface (EBI) address output pin 17.
EBI_A18	PB2	PB2	PB2					External Bus Interface (EBI) address output pin 18.
EBI_A19	PB3	PB3	PB3					External Bus Interface (EBI) address output pin 19.
EBI_A20	PB4	PB4	PB4					External Bus Interface (EBI) address output pin 20.
EBI_A21	PB5	PB5	PB5					External Bus Interface (EBI) address output pin 21.
EBI_A22	PB6	PB6	PB6					External Bus Interface (EBI) address output pin 22.
EBI_A23	PC0	PC0	PC0					External Bus Interface (EBI) address output pin 23.
EBI_A24	PC1	PC1	PC1					External Bus Interface (EBI) address output pin 24.
EBI_A25	PC2	PC2	PC2					External Bus Interface (EBI) address output pin 25.
EBI_A26	PC4	PC4	PC4					External Bus Interface (EBI) address output pin 26.
EBI_A27	PD2	PD2	PD2					External Bus Interface (EBI) address output pin 27.
EBI_AD00	PE8	PE8	PE8					External Bus Interface (EBI) address and data input / output pin 00.
EBI_AD01	PE9	PE9	PE9					External Bus Interface (EBI) address and data input / output pin 01.
EBI_AD02	PE10	PE10	PE10					External Bus Interface (EBI) address and data input / output pin 02.
EBI_AD03	PE11	PE11	PE11					External Bus Interface (EBI) address and data input / output pin 03.
EBI_AD04	PE12	PE12	PE12					External Bus Interface (EBI) address and data input / output pin 04.
EBI_AD05	PE13	PE13	PE13					External Bus Interface (EBI) address and data input / output pin 05.
EBI_AD06	PE14	PE14	PE14					External Bus Interface (EBI) address and data input / output pin 06.
EBI_AD07	PE15	PE15	PE15					External Bus Interface (EBI) address and data input / output pin 07.
EBI_AD08	PA15	PA15	PA15					External Bus Interface (EBI) address and data input / output pin 08.
EBI_AD09	PA0	PA0	PA0					External Bus Interface (EBI) address and data input / output pin 09.
EBI_AD10	PA1	PA1	PA1					External Bus Interface (EBI) address and data input / output pin 10.
EBI_AD11	PA2	PA2	PA2					External Bus Interface (EBI) address and data input / output pin 11.
EBI_AD12	PA3	PA3	PA3					External Bus Interface (EBI) address and data input / output pin 12.
EBI_AD13	PA4	PA4	PA4					External Bus Interface (EBI) address and data input / output pin 13.

Alternate	LOCATION							
Functionality	0	1	2	3	4	5	6	Description
EBI_AD14	PA5	PA5	PA5					External Bus Interface (EBI) address and data input / output pin 14.
EBI_AD15	PA6	PA6	PA6					External Bus Interface (EBI) address and data input / output pin 15.
EBI_ALE		PC11	PC11					External Bus Interface (EBI) Address Latch Enable output.
EBI_ARDY	PF2	PF2	PF2					External Bus Interface (EBI) Hardware Ready Control input.
EBI_BL0	PF6	PF6	PF6					External Bus Interface (EBI) Byte Lane/Enable pin 0.
EBI_BL1	PF7	PF7	PF7					External Bus Interface (EBI) Byte Lane/Enable pin 1.
EBI_CS0	PD9	PD9	PD9					External Bus Interface (EBI) Chip Select output 0.
EBI_CS1	PD10	PD10	PD10					External Bus Interface (EBI) Chip Select output 1.
EBI_CS2	PD11	PD11	PD11					External Bus Interface (EBI) Chip Select output 2.
EBI_CS3	PD12	PD12	PD12					External Bus Interface (EBI) Chip Select output 3.
EBI_CSTFT	PA7	PA7	PA7					External Bus Interface (EBI) Chip Select output TFT.
EBI_DCLK	PA8	PA8	PA8					External Bus Interface (EBI) TFT Dot Clock pin.
EBI_DTEN	PA9	PA9	PA9					External Bus Interface (EBI) TFT Data Enable pin.
EBI_HSNC	PA11	PA11	PA11					External Bus Interface (EBI) TFT Horizontal Synchronization pin.
EBI_NANDREn	PC3	PC3	PC3					External Bus Interface (EBI) NAND Read Enable output.
EBI_NANDWEn	PC5	PC5	PC5					External Bus Interface (EBI) NAND Write Enable output.
EBI_REn	PF5	PF9	PF5					External Bus Interface (EBI) Read Enable output.
EBI_VSNC	PA10	PA10	PA10					External Bus Interface (EBI) TFT Vertical Synchronization pin.
EBI_WEn		PF8						External Bus Interface (EBI) Write Enable output.
ETM_TCLK	PD7	PF8	PC6	PA6				Embedded Trace Module ETM clock .
ETM_TD0	PD6	PF9	PC7	PA2				Embedded Trace Module ETM data 0.
ETM_TD1	PD3	PD13	PD3	PA3				Embedded Trace Module ETM data 1.
ETM_TD2	PD4	PB15	PD4	PA4				Embedded Trace Module ETM data 2.
ETM_TD3	PD5		PD5	PA5				Embedded Trace Module ETM data 3.
GPIO_EM4WU0	PA0							Pin can be used to wake the system up from EM4
GPIO_EM4WU1	PA6							Pin can be used to wake the system up from EM4
GPIO_EM4WU2	PC9							Pin can be used to wake the system up from EM4
GPIO_EM4WU3	PF1							Pin can be used to wake the system up from EM4
GPIO_EM4WU4	PF2							Pin can be used to wake the system up from EM4
GPIO_EM4WU5	PE13							Pin can be used to wake the system up from EM4

Alternate	LOCATION							
Functionality	0	1	2	3	4	5	6	Description
HFXTAL_N	PB14							High Frequency Crystal negative pin. Also used as external optional clock input pin.
HFXTAL_P	PB13							High Frequency Crystal positive pin.
I2C0_SCL	PA1	PD7	PC7	PD15	PC1	PF1	PE13	I2C0 Serial Clock Line input / output.
I2C0_SDA	PA0	PD6	PC6	PD14	PC0	PF0	PE12	I2C0 Serial Data input / output.
I2C1_SCL	PC5	PB12	PE1					I2C1 Serial Clock Line input / output.
I2C1_SDA	PC4	PB11	PE0					I2C1 Serial Data input / output.
LES_ALTEX0	PD6							LESENSE alternate exite output 0.
LES_ALTEX1	PD7							LESENSE alternate exite output 1.
LES_ALTEX2	PA3							LESENSE alternate exite output 2.
LES_ALTEX3	PA4							LESENSE alternate exite output 3.
LES_ALTEX4	PA5							LESENSE alternate exite output 4.
LES_ALTEX5	PE11							LESENSE alternate exite output 5.
LES_ALTEX6	PE12							LESENSE alternate exite output 6.
LES_ALTEX7	PE13							LESENSE alternate exite output 7.
LES_CH0	PC0							LESENSE channel 0.
LES_CH1	PC1							LESENSE channel 1.
LES_CH2	PC2							LESENSE channel 2.
LES_CH3	PC3							LESENSE channel 3.
LES_CH4	PC4							LESENSE channel 4.
LES_CH5	PC5							LESENSE channel 5.
LES_CH6	PC6							LESENSE channel 6.
LES_CH7	PC7							LESENSE channel 7.
LES_CH8	PC8							LESENSE channel 8.
LES_CH9	PC9							LESENSE channel 9.
LES_CH10	PC10							LESENSE channel 10.
LES_CH11	PC11							LESENSE channel 11.
LETIM0_OUT0	PD6	PB11	PF0	PC4				Low Energy Timer LETIM0, output channel 0.
LETIM0_OUT1	PD7	PB12	PF1	PC5				Low Energy Timer LETIM0, output channel 1.
LEU0_RX	PD5	PB14	PE15	PF1	PA0			LEUART0 Receive input.
LEU0_TX	PD4	PB13	PE14	PF0	PF2			LEUART0 Transmit output. Also used as receive input in half duplex communication.
LEU1_RX	PC7	PA6						LEUART1 Receive input.
LEU1_TX	PC6	PA5						LEUART1 Transmit output. Also used as receive input in half duplex communication.
LFXTAL_N	PB8							Low Frequency Crystal (typically 32.768 kHz) negative pin. Also used as an optional external clock input pin.

Alternate	LOCATION							
Functionality	0	1	2	3	4	5	6	Description
LFXTAL_P	PB7							Low Frequency Crystal (typically 32.768 kHz) positive pin.
OPAMP_N0 / DAC0_N0	PC5							Operational Amplifier 0 external negative input.
OPAMP_N1 / DAC0_N1	PD7							Operational Amplifier 1 external negative input.
OPAMP_N2	PD3							Operational Amplifier 2 external negative input.
OPAMP_OUT2	PD5	PD0						Operational Amplifier 2 output.
OPAMP_P0 / DAC0_P0	PC4							Operational Amplifier 0 external positive input.
OPAMP_P1 / DAC0_P1	PD6							Operational Amplifier 1 external positive input.
OPAMP_P2	PD4							Operational Amplifier 2 external positive input.
PCNT0_S0IN		PE0	PC0	PD6				Pulse Counter PCNT0 input number 0.
PCNT0_S1IN		PE1	PC1	PD7				Pulse Counter PCNT0 input number 1.
PCNT1_S0IN	PC4	PB3						Pulse Counter PCNT1 input number 0.
PCNT1_S1IN	PC5	PB4						Pulse Counter PCNT1 input number 1.
PCNT2_S0IN	PD0	PE8						Pulse Counter PCNT2 input number 0.
PCNT2_S1IN	PD1	PE9						Pulse Counter PCNT2 input number 1.
PRS_CH0	PA0							Peripheral Reflex System PRS, channel 0.
PRS_CH1	PA1							Peripheral Reflex System PRS, channel 1.
PRS_CH2	PC0	PF5						Peripheral Reflex System PRS, channel 2.
PRS_CH3	PC1	PE8						Peripheral Reflex System PRS, channel 3.
TIM0_CC0	PA0	PA0	PF6	PD1	PA0	PF0		Timer 0 Capture Compare input / output channel 0.
TIM0_CC1	PA1	PA1	PF7	PD2	PC0	PF1		Timer 0 Capture Compare input / output channel 1.
TIM0_CC2	PA2	PA2	PF8	PD3	PC1	PF2		Timer 0 Capture Compare input / output channel 2.
TIM0_CDTI0	PA3				PC2			Timer 0 Complimentary Dead Time Insertion channel 0.
TIM0_CDTI1	PA4				PC3			Timer 0 Complimentary Dead Time Insertion channel 1.
TIM0_CDTI2	PA5		PF5		PC4	PF5		Timer 0 Complimentary Dead Time Insertion channel 2.
TIM1_CC0		PE10	PB0	PB7	PD6			Timer 1 Capture Compare input / output channel 0.
TIM1_CC1		PE11	PB1	PB8	PD7			Timer 1 Capture Compare input / output channel 1.
TIM1_CC2		PE12	PB2	PB11				Timer 1 Capture Compare input / output channel 2.
TIM2_CC0	PA8	PA12	PC8					Timer 2 Capture Compare input / output channel 0.
TIM2_CC1	PA9	PA13	PC9					Timer 2 Capture Compare input / output channel 1.
TIM2_CC2	PA10	PA14	PC10					Timer 2 Capture Compare input / output channel 2.
TIM3_CC0	PE14	PE0						Timer 3 Capture Compare input / output channel 0.

Alternate	LOCATION							
Functionality	0	1	2	3	4	5	6	Description
TIM3_CC1	PE15	PE1						Timer 3 Capture Compare input / output channel 1.
TIM3_CC2	PA15	PE2						Timer 3 Capture Compare input / output channel 2.
U0_RX	PF7	PE1	PA4					UART0 Receive input.
U0_TX	PF6	PE0	PA3					UART0 Transmit output. Also used as receive input in half duplex communication.
U1_RX		PF11	PB10	PE3				UART1 Receive input.
U1_TX		PF10	PB9	PE2				UART1 Transmit output. Also used as receive input in half duplex communication.
US0_CLK	PE12	PE5	PC9		PB13	PB13		USART0 clock input / output.
US0_CS	PE13	PE4	PC8		PB14	PB14		USART0 chip select input / output.
US0_RX	PE11	PE6	PC10	PE12	PB8	PC1		USART0 Asynchronous Receive. USART0 Synchronous mode Main Input / Secondary Output (MISO).
US0_TX	PE10	PE7	PC11	PE13	PB7	PC0		USART0 Asynchronous Transmit.Also used as receive input in half duplex communication. USART0 Synchronous mode Main Output / Secondary Input (MOSI).
US1_CLK	PB7	PD2	PF0					USART1 clock input / output.
US1_CS	PB8	PD3	PF1					USART1 chip select input / output.
US1_RX	PC1	PD1	PD6					USART1 Asynchronous Receive. USART1 Synchronous mode Main Input / Secondary Output (MISO).
US1_TX	PC0	PD0	PD7					USART1 Asynchronous Transmit.Also used as receive input in half duplex communication. USART1 Synchronous mode Main Output / Secondary Input (MOSI).
US2_CLK	PC4	PB5						USART2 clock input / output.
US2_CS	PC5	PB6						USART2 chip select input / output.
US2_RX	PC3	PB4						USART2 Asynchronous Receive. USART2 Synchronous mode Main Input / Secondary Output (MISO).
US2_TX	PC2	PB3						USART2 Asynchronous Transmit.Also used as receive input in half duplex communication. USART2 Synchronous mode Main Output / Secondary Input (MOSI).
USB_DM	PF10							USB D- pin.
USB_DMPU	PD2							USB D- Pullup control.
USB_DP	PF11							USB D+ pin.
USB_ID	PF12							USB ID pin. Used in OTG mode.
USB_VBUS	USB_VBUS							USB 5 V VBUS input.

Alternate	LOCATION							
Functionality	0	1	2	3	4	5	6	Description
USB_VBUSEN	PF5							USB 5 V VBUS enable.
USB_VREGI	USB_VREGI							USB Input to internal 3.3 V regulator
USB_VREGO	USB_VREGO							USB Decoupling for internal 3.3 V USB regulator and regulator output

5.10.3 GPIO Pinout Overview

The specific GPIO pins available in EFM32WG390 are shown in the following table. Each GPIO port is organized as 16-bit ports indicated by letters A through F, and the individual pin on this port is indicated by a number from 15 down to 0.

Table 5.30. GPIO Pinout

Port	Pin 15	Pin 14	Pin 13	Pin 12	Pin 11	Pin 10	Pin 9	Pin 8	Pin 7	Pin 6	Pin 5	Pin 4	Pin 3	Pin 2	Pin 1	Pin 0
Port A	PA15	PA14	PA13	PA12	PA11	PA10	PA9	PA8	PA7	PA6	PA5	PA4	PA3	PA2	PA1	PA0
Port B	PB15	PB14	PB13	PB12	PB11	PB10	PB9	PB8	PB7	PB6	PB5	PB4	PB3	PB2	PB1	PB0
Port C	—	—	—	—	PC11	PC10	PC9	PC8	PC7	PC6	PC5	PC4	PC3	PC2	PC1	PC0
Port D	PD15	PD14	PD13	PD12	PD11	PD10	PD9	PD8	PD7	PD6	PD5	PD4	PD3	PD2	PD1	PD0
Port E	PE15	PE14	PE13	PE12	PE11	PE10	PE9	PE8	PE7	PE6	PE5	PE4	PE3	PE2	PE1	PE0
Port F	—	—	—	PF12	PF11	PF10	PF9	PF8	PF7	PF6	PF5	—	—	PF2	PF1	PF0

5.10.4 Opamp Pinout Overview

The specific opamp terminals available in EFM32WG390 is shown in the following figure.

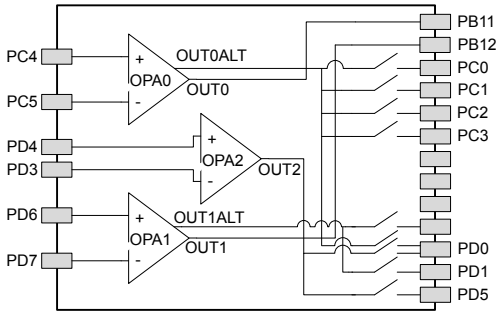

Figure 5.20. Opamp Pinout

5.11 EFM32WG395 (BGA120)

5.11.1 Pinout

The EFM32WG395 pinout is shown in the following figure and table. Alternate locations are denoted by "#" followed by the location number (Multiple locations on the same pin are split with "/"). Alternate locations can be configured in the LOCATION bitfield in the *_ROUTE register in the module in question.

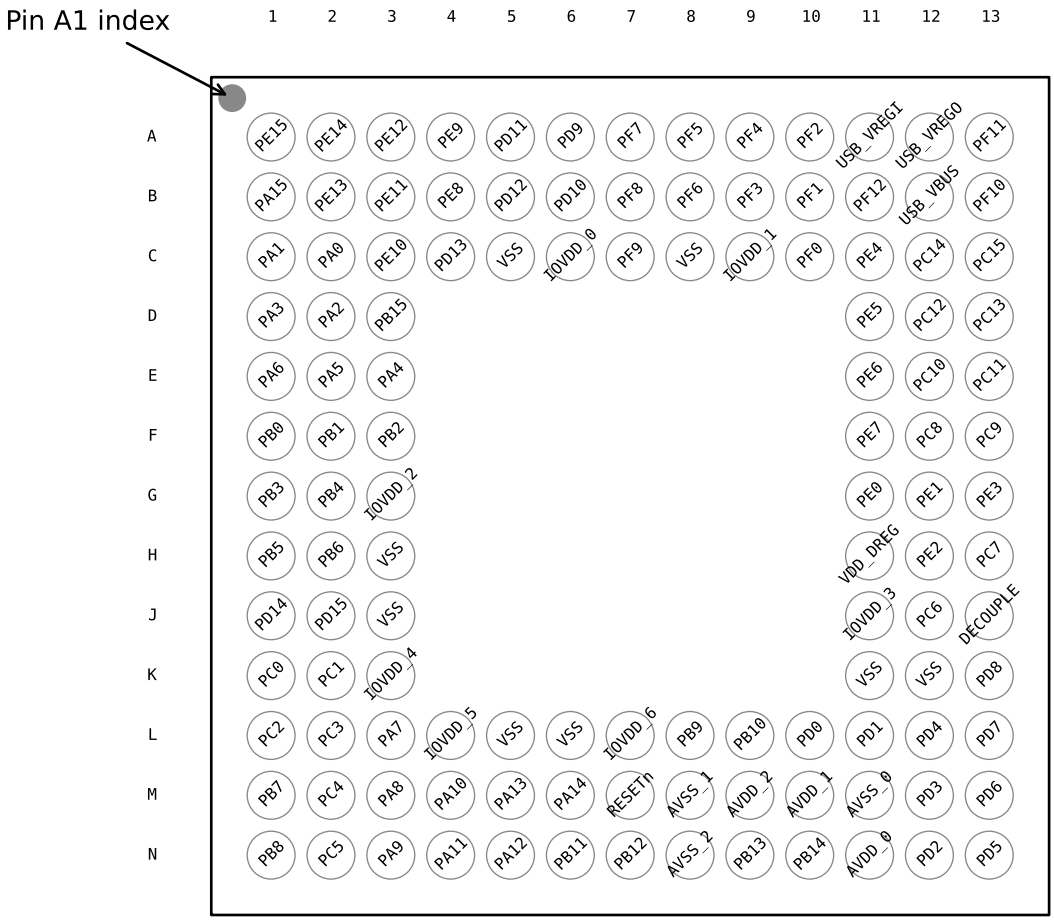

Figure 5.21. EFM32WG395 Pinout (top view, not to scale)

Table 5.31. Device Pinout

BGA120 Pin# and Name		Pin Alternate Functionality / Description				
Pin #	Pin Name	Analog	EBI	Timers	Communication	Other
A1	PE15		EBI_AD07 #0/1/2	TIM3_CC1 #0	LEU0_RX #2	
A2	PE14		EBI_AD06 #0/1/2	TIM3_CC0 #0	LEU0_TX #2	
A3	PE12		EBI_AD04 #0/1/2	TIM1_CC2 #1	US0_RX #3 US0_CLK #0 I2C0_SDA #6	CMU_CLK1 #2 LES_ALTEX6 #0

BGA120 Pin# and Name		Pin Alternate Functionality / Description				
Pin #	Pin Name	Analog	EBI	Timers	Communication	Other
A4	PE9		EBI_AD01 #0/1/2	PCNT2_S1IN #1		
A5	PD11		EBI_CS2 #0/1/2			
A6	PD9		EBI_CS0 #0/1/2			
A7	PF7		EBI_BL1 #0/1/2	TIM0_CC1 #2	U0_RX #0	
A8	PF5		EBI_REn #0/2	TIM0_CDTI2 #2/5	USB_VBUSEN #0	PRS_CH2 #1
A9	PF4		EBI_WEn #0/2	TIM0_CDTI1 #2/5		PRS_CH1 #1
A10	PF2		EBI_ARDY #0/1/2	TIM0_CC2 #5	LEU0_TX #4	ACMP1_O #0 DBG_SWO #0 GPIO_EM4WU4
A11	USB_VREGI	Input to internal 3.3V USB regulator				
A12	USB_VREGO	Output and decoupling for internal 3.3V USB regulator				
A13	PF11				U1_RX #1 USB_DP	
B1	PA15		EBI_AD08 #0/1/2	TIM3_CC2 #0		
B2	PE13		EBI_AD05 #0/1/2		US0_TX #3 US0_CS #0 I2C0_SCL #6	LES_ALTEX7 #0 ACMP0_O #0 GPIO_EM4WU5
B3	PE11		EBI_AD03 #0/1/2	TIM1_CC1 #1	US0_RX #0	LES_ALTEX5 #0 BOOT_RX
B4	PE8		EBI_AD00 #0/1/2	PCNT2_S0IN #1		PRS_CH3 #1
B5	PD12		EBI_CS3 #0/1/2			
B6	PD10		EBI_CS1 #0/1/2			
B7	PF8		EBI_WEn #1	TIM0_CC2 #2		ETM_TCLK #1
B8	PF6		EBI_BL0 #0/1/2	TIM0_CC0 #2	U0_TX #0	
B9	PF3		EBI_ALE #0	TIM0_CDTI0 #2/5		PRS_CH0 #1 ETM_TD3 #1
B10	PF1			TIM0_CC1 #5 LE-TIM0_OUT1 #2	US1_CS #2 LEU0_RX #3 I2C0_SCL #5	DBG_SWDIO #0/1/2/3 GPIO_EM4WU3
B11	PF12				USB_ID	
B12	USB_VBUS	USB 5.0 V VBUS input.				
B13	PF10				U1_TX #1 USB_DM	
C1	PA1		EBI_AD10 #0/1/2	TIM0_CC1 #0/1	I2C0_SCL #0	CMU_CLK1 #0 PRS_CH1 #0
C2	PA0		EBI_AD09 #0/1/2	TIM0_CC0 #0/1/4	LEU0_RX #4 I2C0_SDA #0	PRS_CH0 #0 GPIO_EM4WU0
C3	PE10		EBI_AD02 #0/1/2	TIM1_CC0 #1	US0_TX #0	BOOT_TX
C4	PD13					ETM_TD1 #1
C5	VSS	Ground.				
C6	IOVDD_0	Digital IO power supply 0.				
C7	PF9		EBI_REn #1			ETM_TD0 #1

BGA120 Pin# and Name		Pin Alternate Functionality / Description				
Pin #	Pin Name	Analog	EBI	Timers	Communication	Other
C8	VSS	Ground.				
C9	IOVDD_1	Digital IO power supply 1.				
C10	PF0			TIM0_CC0 #5 LE-TIM0_OUT0 #2	US1_CLK #2 LEU0_TX #3 I2C0_SDA #5	DBG_SWCLK #0/1/2/3
C11	PE4		EBI_A11 #0/1/2		US0_CS #1	
C12	PC14	ACMP1_CH6 DAC0_OUT1ALT #2/ OPAMP_OUT1ALT		TIM0_CDTI1 #1/3 TIM1_CC1 #0 PCNT0_S1IN #0	US0_CS #3 U0_TX #3	LES_CH14 #0
C13	PC15	ACMP1_CH7 DAC0_OUT1ALT #3/ OPAMP_OUT1ALT		TIM0_CDTI2 #1/3 TIM1_CC2 #0	US0_CLK #3 U0_RX #3	LES_CH15 #0 DBG_SWO #1
D1	PA3		EBI_AD12 #0/1/2	TIM0_CDTI0 #0	U0_TX #2	LES_ALTEX2 #0 ETM_TD1 #3
D2	PA2		EBI_AD11 #0/1/2	TIM0_CC2 #0/1		CMU_CLK0 #0 ETM_TD0 #3
D3	PB15					ETM_TD2 #1
D11	PE5		EBI_A12 #0/1/2		US0_CLK #1	
D12	PC12	ACMP1_CH4 DAC0_OUT1ALT #0/ OPAMP_OUT1ALT			U1_TX #0	CMU_CLK0 #1 LES_CH12 #0
D13	PC13	ACMP1_CH5 DAC0_OUT1ALT #1/ OPAMP_OUT1ALT		TIM0_CDTI0 #1/3 TIM1_CC0 #0 TIM1_CC2 #4 PCNT0_S0IN #0	U1_RX #0	LES_CH13 #0
E1	PA6		EBI_AD15 #0/1/2		LEU1_RX #1	ETM_TCLK #3 GPIO_EM4WU1
E2	PA5		EBI_AD14 #0/1/2	TIM0_CDTI2 #0	LEU1_TX #1	LES_ALTEX4 #0 ETM_TD3 #3
E3	PA4		EBI_AD13 #0/1/2	TIM0_CDTI1 #0	U0_RX #2	LES_ALTEX3 #0 ETM_TD2 #3
E11	PE6		EBI_A13 #0/1/2		US0_RX #1	
E12	PC10	ACMP1_CH2	EBI_A10 #1/2	TIM2_CC2 #2	US0_RX #2	LES_CH10 #0
E13	PC11	ACMP1_CH3	EBI_ALE #1/2		US0_TX #2	LES_CH11 #0
F1	PB0		EBI_A16 #0/1/2	TIM1_CC0 #2		
F2	PB1		EBI_A17 #0/1/2	TIM1_CC1 #2		
F3	PB2		EBI_A18 #0/1/2	TIM1_CC2 #2		
F11	PE7		EBI_A14 #0/1/2		US0_TX #1	
F12	PC8	ACMP1_CH0	EBI_A15 #0/1/2	TIM2_CC0 #2	US0_CS #2	LES_CH8 #0
F13	PC9	ACMP1_CH1	EBI_A09 #1/2	TIM2_CC1 #2	US0_CLK #2	LES_CH9 #0 GPIO_EM4WU2

BGA120 Pin# and Name		Pin Alternate Functionality / Description				
Pin #	Pin Name	Analog	EBI	Timers	Communication	Other
G1	PB3		EBI_A19 #0/1/2	PCNT1_S0IN #1	US2_TX #1	
G2	PB4		EBI_A20 #0/1/2	PCNT1_S1IN #1	US2_RX #1	
G3	IOVDD_2	Digital IO power supply 2.				
G11	PE0		EBI_A07 #0/1/2	TIM3_CC0 #1 PCNT0_S0IN #1	U0_TX #1 I2C1_SDA #2	
G12	PE1		EBI_A08 #0/1/2	TIM3_CC1 #1 PCNT0_S1IN #1	U0_RX #1 I2C1_SCL #2	
G13	PE3	BU_STAT	EBI_A10 #0		U1_RX #3	ACMP1_O #1
H1	PB5		EBI_A21 #0/1/2		US2_CLK #1	
H2	PB6		EBI_A22 #0/1/2		US2_CS #1	
H3	VSS	Ground.				
H11	VDD_DREG	Power supply for on-chip voltage regulator.				
H12	PE2	BU_VOUT	EBI_A09 #0	TIM3_CC2 #1	U1_TX #3	ACMP0_O #1
H13	PC7	ACMP0_CH7	EBI_A06 #0/1/2		LEU1_RX #0 I2C0_SCL #2	LES_CH7 #0 ETM_TD0 #2
J1	PD14				I2C0_SDA #3	
J2	PD15				I2C0_SCL #3	
J3	VSS	Ground.				
J11	IOVDD_3	Digital IO power supply 3.				
J12	PC6	ACMP0_CH6	EBI_A05 #0/1/2		LEU1_TX #0 I2C0_SDA #2	LES_CH6 #0 ETM_TCLK #2
J13	DECOUPLE	Decouple output for on-chip voltage regulator. An external capacitance of size $C_{DECOUPLE}$ is required at this pin.				
K1	PC0	ACMP0_CH0 DAC0_OUT0ALT #0/ OPAMP_OUT0ALT	EBI_A23 #0/1/2	TIM0_CC1 #4 PCNT0_S0IN #2	US0_TX #5 US1_TX #0 I2C0_SDA #4	LES_CH0 #0 PRS_CH2 #0
K2	PC1	ACMP0_CH1 DAC0_OUT0ALT #1/ OPAMP_OUT0ALT	EBI_A24 #0/1/2	TIM0_CC2 #4 PCNT0_S1IN #2	US0_RX #5 US1_RX #0 I2C0_SCL #4	LES_CH1 #0 PRS_CH3 #0
K3	IOVDD_4	Digital IO power supply 4.				
K11	VSS	Ground.				
K12	VSS	Ground.				
K13	PD8	BU_VIN				CMU_CLK1 #1
L1	PC2	ACMP0_CH2 DAC0_OUT0ALT #2/ OPAMP_OUT0ALT	EBI_A25 #0/1/2	TIM0_CDTI0 #4	US2_TX #0	LES_CH2 #0

BGA120 Pin# and Name		Pin Alternate Functionality / Description				
Pin #	Pin Name	Analog	EBI	Timers	Communication	Other
L2	PC3	ACMP0_CH3 DAC0_OUT0ALT #3/ OPAMP_OUT0ALT	EBI_NANDREn #0/1/2	TIM0_CDTI1 #4	US2_RX #0	LES_CH3 #0
L3	PA7		EBI_CSTFT #0/1/2			
L4	IOVDD_5	Digital IO power supply 5.				
L5	VSS	Ground.				
L6	VSS	Ground.				
L7	IOVDD_6	Digital IO power supply 6.				
L8	PB9		EBI_A03 #0/1/2		U1_TX #2	
L9	PB10		EBI_A04 #0/1/2		U1_RX #2	
L10	PD0	ADC0_CH0 DAC0_OUT0ALT #4/ OPAMP_OUT0ALT OPAMP_OUT2 #1		PCNT2_S0IN #0	US1_TX #1	
L11	PD1	ADC0_CH1 DAC0_OUT1ALT #4/ OPAMP_OUT1ALT		TIM0_CC0 #3 PCNT2_S1IN #0	US1_RX #1	DBG_SWO #2
L12	PD4	ADC0_CH4 OPAMP_P2			LEU0_TX #0	ETM_TD2 #0/2
L13	PD7	ADC0_CH7 / DAC0_N1 / OPAMP_N1		TIM1_CC1 #4 LE-TIM0_OUT1 #0 PCNT0_S1IN #3	US1_TX #2 I2C0_SCL #1	CMU_CLK0 #2 LES_ALTEX1 #0 ACMP1_O #2 ETM_TCLK #0
M1	PB7	LFXTAL_P		TIM1_CC0 #3	US0_TX #4 US1_CLK #0	
M2	PC4	ACMP0_CH4 / DAC0_P0 / OPAMP_P0	EBI_A26 #0/1/2	TIM0_CDTI2 #4 LE-TIM0_OUT0 #3 PCNT1_S0IN #0	US2_CLK #0 I2C1_SDA #0	LES_CH4 #0
M3	PA8		EBI_DCLK #0/1/2	TIM2_CC0 #0		
M4	PA10		EBI_VSNC #0/1/2	TIM2_CC2 #0		
M5	PA13		EBI_A01 #0/1/2	TIM2_CC1 #1		
M6	PA14		EBI_A02 #0/1/2	TIM2_CC2 #1		
M7	RESETn	Reset input, active low. To apply an external reset source to this pin, it is required to only drive this pin low during reset, and let the internal pull-up ensure that reset is released.				
M8	AVSS_1	Analog ground 1.				
M9	AVDD_2	Analog power supply 2.				
M10	AVDD_1	Analog power supply 1.				
M11	AVSS_0	Analog ground 0.				
M12	PD3	ADC0_CH3 OPAMP_N2		TIM0_CC2 #3	US1_CS #1	ETM_TD1 #0/2

BGA120 Pin# and Name		Pin Alternate Functionality / Description				
Pin #	Pin Name	Analog	EBI	Timers	Communication	Other
M13	PD6	ADC0_CH6 / DAC0_P1 / OPAMP_P1		TIM1_CC0 #4 LE-TIM0_OUT0 #0 PCNT0_S0IN #3	US1_RX #2 I2C0_SDA #1	LES_ALTEX0 #0 ACMP0_O #2 ETM_TD0 #0
N1	PB8	LFXTAL_N		TIM1_CC1 #3	US0_RX #4 US1_CS #0	
N2	PC5	ACMP0_CH5 / DAC0_N0 / OPAMP_N0	EBI_NANDWEn #0/1/2	LETIM0_OUT1 #3 PCNT1_S1IN #0	US2_CS #0 I2C1_SCL #0	LES_CH5 #0
N3	PA9		EBI_DTEN #0/1/2	TIM2_CC1 #0		
N4	PA11		EBI_HSNC #0/1/2			
N5	PA12		EBI_A00 #0/1/2	TIM2_CC0 #1		
N6	PB11	DAC0_OUT0 / OPAMP_OUT0		TIM1_CC2 #3 LE-TIM0_OUT0 #1	I2C1_SDA #1	
N7	PB12	DAC0_OUT1 / OPAMP_OUT1		LETIM0_OUT1 #1	I2C1_SCL #1	
N8	AVSS_2	Analog ground 2.				
N9	PB13	HFXTAL_P			US0_CLK #4/5 LEU0_TX #1	
N10	PB14	HFXTAL_N			US0_CS #4/5 LEU0_RX #1	
N11	AVDD_0	Analog power supply 0.				
N12	PD2	ADC0_CH2	EBI_A27 #0/1/2	TIM0_CC1 #3	USB_DMPU #0 US1_CLK #1	DBG_SWO #3
N13	PD5	ADC0_CH5 OPAMP_OUT2 #0			LEU0_RX #0	ETM_TD3 #0/2

5.11.2 Alternate Functionality Pinout

A wide selection of alternate functionality is available for multiplexing to various pins. This is shown in the following table. The table shows the name of the alternate functionality in the first column, followed by columns showing the possible LOCATION bitfield settings.

Note: Some functionality, such as analog interfaces, do not have alternate settings or a LOCATION bitfield. In these cases, the pinout is shown in the column corresponding to LOCATION 0.

Table 5.32. Alternate Functionality Overview

Alternate	LOCATION							
Functionality	0	1	2	3	4	5	6	Description
ACMP0_CH0	PC0							Analog comparator ACMP0, channel 0.
ACMP0_CH1	PC1							Analog comparator ACMP0, channel 1.
ACMP0_CH2	PC2							Analog comparator ACMP0, channel 2.
ACMP0_CH3	PC3							Analog comparator ACMP0, channel 3.
ACMP0_CH4	PC4							Analog comparator ACMP0, channel 4.
ACMP0_CH5	PC5							Analog comparator ACMP0, channel 5.
ACMP0_CH6	PC6							Analog comparator ACMP0, channel 6.
ACMP0_CH7	PC7							Analog comparator ACMP0, channel 7.
ACMP0_O	PE13	PE2	PD6					Analog comparator ACMP0, digital output.
ACMP1_CH0	PC8							Analog comparator ACMP1, channel 0.
ACMP1_CH1	PC9							Analog comparator ACMP1, channel 1.
ACMP1_CH2	PC10							Analog comparator ACMP1, channel 2.
ACMP1_CH3	PC11							Analog comparator ACMP1, channel 3.
ACMP1_CH4	PC12							Analog comparator ACMP1, channel 4.
ACMP1_CH5	PC13							Analog comparator ACMP1, channel 5.
ACMP1_CH6	PC14							Analog comparator ACMP1, channel 6.
ACMP1_CH7	PC15							Analog comparator ACMP1, channel 7.
ACMP1_O	PF2	PE3	PD7					Analog comparator ACMP1, digital output.
ADC0_CH0	PD0							Analog to digital converter ADC0, input channel number 0.
ADC0_CH1	PD1							Analog to digital converter ADC0, input channel number 1.
ADC0_CH2	PD2							Analog to digital converter ADC0, input channel number 2.
ADC0_CH3	PD3							Analog to digital converter ADC0, input channel number 3.
ADC0_CH4	PD4							Analog to digital converter ADC0, input channel number 4.
ADC0_CH5	PD5							Analog to digital converter ADC0, input channel number 5.
ADC0_CH6	PD6							Analog to digital converter ADC0, input channel number 6.

Alternate	LOCATION							
Functionality	0	1	2	3	4	5	6	Description
ADC0_CH7	PD7							Analog to digital converter ADC0, input channel number 7.
BOOT_RX	PE11							Bootloader RX.
BOOT_TX	PE10							Bootloader TX.
BU_STAT	PE3							Backup Power Domain status, whether or not the system is in backup mode
BU_VIN	PD8							Battery input for Backup Power Domain
BU_VOUT	PE2							Power output for Backup Power Domain
CMU_CLK0	PA2	PC12	PD7					Clock Management Unit, clock output number 0.
CMU_CLK1	PA1	PD8	PE12					Clock Management Unit, clock output number 1.
DAC0_OUT0 / OPAMP_OUT0	PB11							Digital to Analog Converter DAC0_OUT0 /OPAMP output channel number 0.
DAC0_OUT0ALT / OPAMP_OUT0ALT	PC0	PC1	PC2	PC3	PD0			Digital to Analog Converter DAC0_OUT0ALT / OPAMP alternative output for channel 0.
DAC0_OUT1 / OPAMP_OUT1	PB12							Digital to Analog Converter DAC0_OUT1 / OPAMP output channel number 1.
DAC0_OUT1ALT / OPAMP_OUT1ALT	PC12	PC13	PC14	PC15	PD1			Digital to Analog Converter DAC0_OUT1ALT / OPAMP alternative output for channel 1.
DBG_SWCLK	PF0	PF0	PF0	PF0				Debug-interface Serial Wire clock input. Note that this function is enabled to pin out of reset, and has a built-in pull down.
DBG_SWDIO	PF1	PF1	PF1	PF1				Debug-interface Serial Wire data input / output. Note that this function is enabled to pin out of reset, and has a built-in pull up.
DBG_SWO	PF2	PC15	PD1	PD2				Debug-interface Serial Wire viewer Output. Note that this function is not enabled after reset, and must be enabled by software to be used.
EBI_A00	PA12	PA12	PA12					External Bus Interface (EBI) address output pin 00.
EBI_A01	PA13	PA13	PA13					External Bus Interface (EBI) address output pin 01.
EBI_A02	PA14	PA14	PA14					External Bus Interface (EBI) address output pin 02.
EBI_A03	PB9	PB9	PB9					External Bus Interface (EBI) address output pin 03.
EBI_A04	PB10	PB10	PB10					External Bus Interface (EBI) address output pin 04.
EBI_A05	PC6	PC6	PC6					External Bus Interface (EBI) address output pin 05.
EBI_A06	PC7	PC7	PC7					External Bus Interface (EBI) address output pin 06.
EBI_A07	PE0	PE0	PE0					External Bus Interface (EBI) address output pin 07.
EBI_A08	PE1	PE1	PE1					External Bus Interface (EBI) address output pin 08.
EBI_A09	PE2	PC9	PC9					External Bus Interface (EBI) address output pin 09.
EBI_A10	PE3	PC10	PC10					External Bus Interface (EBI) address output pin 10.
EBI_A11	PE4	PE4	PE4					External Bus Interface (EBI) address output pin 11.
EBI_A12	PE5	PE5	PE5					External Bus Interface (EBI) address output pin 12.

Alternate	LOCATION							
Functionality	0	1	2	3	4	5	6	Description
EBI_A13	PE6	PE6	PE6					External Bus Interface (EBI) address output pin 13.
EBI_A14	PE7	PE7	PE7					External Bus Interface (EBI) address output pin 14.
EBI_A15	PC8	PC8	PC8					External Bus Interface (EBI) address output pin 15.
EBI_A16	PB0	PB0	PB0					External Bus Interface (EBI) address output pin 16.
EBI_A17	PB1	PB1	PB1					External Bus Interface (EBI) address output pin 17.
EBI_A18	PB2	PB2	PB2					External Bus Interface (EBI) address output pin 18.
EBI_A19	PB3	PB3	PB3					External Bus Interface (EBI) address output pin 19.
EBI_A20	PB4	PB4	PB4					External Bus Interface (EBI) address output pin 20.
EBI_A21	PB5	PB5	PB5					External Bus Interface (EBI) address output pin 21.
EBI_A22	PB6	PB6	PB6					External Bus Interface (EBI) address output pin 22.
EBI_A23	PC0	PC0	PC0					External Bus Interface (EBI) address output pin 23.
EBI_A24	PC1	PC1	PC1					External Bus Interface (EBI) address output pin 24.
EBI_A25	PC2	PC2	PC2					External Bus Interface (EBI) address output pin 25.
EBI_A26	PC4	PC4	PC4					External Bus Interface (EBI) address output pin 26.
EBI_A27	PD2	PD2	PD2					External Bus Interface (EBI) address output pin 27.
EBI_AD00	PE8	PE8	PE8					External Bus Interface (EBI) address and data input / output pin 00.
EBI_AD01	PE9	PE9	PE9					External Bus Interface (EBI) address and data input / output pin 01.
EBI_AD02	PE10	PE10	PE10					External Bus Interface (EBI) address and data input / output pin 02.
EBI_AD03	PE11	PE11	PE11					External Bus Interface (EBI) address and data input / output pin 03.
EBI_AD04	PE12	PE12	PE12					External Bus Interface (EBI) address and data input / output pin 04.
EBI_AD05	PE13	PE13	PE13					External Bus Interface (EBI) address and data input / output pin 05.
EBI_AD06	PE14	PE14	PE14					External Bus Interface (EBI) address and data input / output pin 06.
EBI_AD07	PE15	PE15	PE15					External Bus Interface (EBI) address and data input / output pin 07.
EBI_AD08	PA15	PA15	PA15					External Bus Interface (EBI) address and data input / output pin 08.
EBI_AD09	PA0	PA0	PA0					External Bus Interface (EBI) address and data input / output pin 09.
EBI_AD10	PA1	PA1	PA1					External Bus Interface (EBI) address and data input / output pin 10.
EBI_AD11	PA2	PA2	PA2					External Bus Interface (EBI) address and data input / output pin 11.
EBI_AD12	PA3	PA3	PA3					External Bus Interface (EBI) address and data input / output pin 12.

Alternate	LOCATION							
Functionality	0	1	2	3	4	5	6	Description
EBI_AD13	PA4	PA4	PA4					External Bus Interface (EBI) address and data input / output pin 13.
EBI_AD14	PA5	PA5	PA5					External Bus Interface (EBI) address and data input / output pin 14.
EBI_AD15	PA6	PA6	PA6					External Bus Interface (EBI) address and data input / output pin 15.
EBI_ALE	PF3	PC11	PC11					External Bus Interface (EBI) Address Latch Enable output.
EBI_ARDY	PF2	PF2	PF2					External Bus Interface (EBI) Hardware Ready Control input.
EBI_BL0	PF6	PF6	PF6					External Bus Interface (EBI) Byte Lane/Enable pin 0.
EBI_BL1	PF7	PF7	PF7					External Bus Interface (EBI) Byte Lane/Enable pin 1.
EBI_CS0	PD9	PD9	PD9					External Bus Interface (EBI) Chip Select output 0.
EBI_CS1	PD10	PD10	PD10					External Bus Interface (EBI) Chip Select output 1.
EBI_CS2	PD11	PD11	PD11					External Bus Interface (EBI) Chip Select output 2.
EBI_CS3	PD12	PD12	PD12					External Bus Interface (EBI) Chip Select output 3.
EBI_CSTFT	PA7	PA7	PA7					External Bus Interface (EBI) Chip Select output TFT.
EBI_DCLK	PA8	PA8	PA8					External Bus Interface (EBI) TFT Dot Clock pin.
EBI_DTEN	PA9	PA9	PA9					External Bus Interface (EBI) TFT Data Enable pin.
EBI_HSNC	PA11	PA11	PA11					External Bus Interface (EBI) TFT Horizontal Synchronization pin.
EBI_NANDREn	PC3	PC3	PC3					External Bus Interface (EBI) NAND Read Enable output.
EBI_NANDWEn	PC5	PC5	PC5					External Bus Interface (EBI) NAND Write Enable output.
EBI_REn	PF5	PF9	PF5					External Bus Interface (EBI) Read Enable output.
EBI_VSNC	PA10	PA10	PA10					External Bus Interface (EBI) TFT Vertical Synchronization pin.
EBI_WEn	PF4	PF8	PF4					External Bus Interface (EBI) Write Enable output.
ETM_TCLK	PD7	PF8	PC6	PA6				Embedded Trace Module ETM clock .
ETM_TD0	PD6	PF9	PC7	PA2				Embedded Trace Module ETM data 0.
ETM_TD1	PD3	PD13	PD3	PA3				Embedded Trace Module ETM data 1.
ETM_TD2	PD4	PB15	PD4	PA4				Embedded Trace Module ETM data 2.
ETM_TD3	PD5	PF3	PD5	PA5				Embedded Trace Module ETM data 3.
GPIO_EM4WU0	PA0							Pin can be used to wake the system up from EM4
GPIO_EM4WU1	PA6							Pin can be used to wake the system up from EM4
GPIO_EM4WU2	PC9							Pin can be used to wake the system up from EM4
GPIO_EM4WU3	PF1							Pin can be used to wake the system up from EM4

Alternate	LOCATION							
Functionality	0	1	2	3	4	5	6	Description
GPIO_EM4WU4	PF2							Pin can be used to wake the system up from EM4
GPIO_EM4WU5	PE13							Pin can be used to wake the system up from EM4
HFXTAL_N	PB14							High Frequency Crystal negative pin. Also used as external optional clock input pin.
HFXTAL_P	PB13							High Frequency Crystal positive pin.
I2C0_SCL	PA1	PD7	PC7	PD15	PC1	PF1	PE13	I2C0 Serial Clock Line input / output.
I2C0_SDA	PA0	PD6	PC6	PD14	PC0	PF0	PE12	I2C0 Serial Data input / output.
I2C1_SCL	PC5	PB12	PE1					I2C1 Serial Clock Line input / output.
I2C1_SDA	PC4	PB11	PE0					I2C1 Serial Data input / output.
LES_ALTEX0	PD6							LESENSE alternate exite output 0.
LES_ALTEX1	PD7							LESENSE alternate exite output 1.
LES_ALTEX2	PA3							LESENSE alternate exite output 2.
LES_ALTEX3	PA4							LESENSE alternate exite output 3.
LES_ALTEX4	PA5							LESENSE alternate exite output 4.
LES_ALTEX5	PE11							LESENSE alternate exite output 5.
LES_ALTEX6	PE12							LESENSE alternate exite output 6.
LES_ALTEX7	PE13							LESENSE alternate exite output 7.
LES_CH0	PC0							LESENSE channel 0.
LES_CH1	PC1							LESENSE channel 1.
LES_CH2	PC2							LESENSE channel 2.
LES_CH3	PC3							LESENSE channel 3.
LES_CH4	PC4							LESENSE channel 4.
LES_CH5	PC5							LESENSE channel 5.
LES_CH6	PC6							LESENSE channel 6.
LES_CH7	PC7							LESENSE channel 7.
LES_CH8	PC8							LESENSE channel 8.
LES_CH9	PC9							LESENSE channel 9.
LES_CH10	PC10							LESENSE channel 10.
LES_CH11	PC11							LESENSE channel 11.
LES_CH12	PC12							LESENSE channel 12.
LES_CH13	PC13							LESENSE channel 13.
LES_CH14	PC14							LESENSE channel 14.
LES_CH15	PC15							LESENSE channel 15.
LETIM0_OUT0	PD6	PB11	PF0	PC4				Low Energy Timer LETIM0, output channel 0.
LETIM0_OUT1	PD7	PB12	PF1	PC5				Low Energy Timer LETIM0, output channel 1.
LEU0_RX	PD5	PB14	PE15	PF1	PA0			LEUART0 Receive input.

Alternate	LOCATION							
Functionality	0	1	2	3	4	5	6	Description
LEU0_TX	PD4	PB13	PE14	PF0	PF2			LEUART0 Transmit output. Also used as receive input in half duplex communication.
LEU1_RX	PC7	PA6						LEUART1 Receive input.
LEU1_TX	PC6	PA5						LEUART1 Transmit output. Also used as receive input in half duplex communication.
LFXTAL_N	PB8							Low Frequency Crystal (typically 32.768 kHz) negative pin. Also used as an optional external clock input pin.
LFXTAL_P	PB7							Low Frequency Crystal (typically 32.768 kHz) positive pin.
OPAMP_N0 / DAC0_N0	PC5							Operational Amplifier 0 external negative input.
OPAMP_N1 / DAC0_N1	PD7							Operational Amplifier 1 external negative input.
OPAMP_N2	PD3							Operational Amplifier 2 external negative input.
OPAMP_OUT2	PD5	PD0						Operational Amplifier 2 output.
OPAMP_P0 / DAC0_P0	PC4							Operational Amplifier 0 external positive input.
OPAMP_P1 / DAC0_P1	PD6							Operational Amplifier 1 external positive input.
OPAMP_P2	PD4							Operational Amplifier 2 external positive input.
PCNT0_S0IN	PC13	PE0	PC0	PD6				Pulse Counter PCNT0 input number 0.
PCNT0_S1IN	PC14	PE1	PC1	PD7				Pulse Counter PCNT0 input number 1.
PCNT1_S0IN	PC4	PB3						Pulse Counter PCNT1 input number 0.
PCNT1_S1IN	PC5	PB4						Pulse Counter PCNT1 input number 1.
PCNT2_S0IN	PD0	PE8						Pulse Counter PCNT2 input number 0.
PCNT2_S1IN	PD1	PE9						Pulse Counter PCNT2 input number 1.
PRS_CH0	PA0	PF3						Peripheral Reflex System PRS, channel 0.
PRS_CH1	PA1	PF4						Peripheral Reflex System PRS, channel 1.
PRS_CH2	PC0	PF5						Peripheral Reflex System PRS, channel 2.
PRS_CH3	PC1	PE8						Peripheral Reflex System PRS, channel 3.
TIM0_CC0	PA0	PA0	PF6	PD1	PA0	PF0		Timer 0 Capture Compare input / output channel 0.
TIM0_CC1	PA1	PA1	PF7	PD2	PC0	PF1		Timer 0 Capture Compare input / output channel 1.
TIM0_CC2	PA2	PA2	PF8	PD3	PC1	PF2		Timer 0 Capture Compare input / output channel 2.
TIM0_CDTI0	PA3	PC13	PF3	PC13	PC2	PF3		Timer 0 Complimentary Dead Time Insertion channel 0.
TIM0_CDTI1	PA4	PC14	PF4	PC14	PC3	PF4		Timer 0 Complimentary Dead Time Insertion channel 1.
TIM0_CDTI2	PA5	PC15	PF5	PC15	PC4	PF5		Timer 0 Complimentary Dead Time Insertion channel 2.
TIM1_CC0	PC13	PE10	PB0	PB7	PD6			Timer 1 Capture Compare input / output channel 0.

Alternate	LOCATION							
Functionality	0	1	2	3	4	5	6	Description
TIM1_CC1	PC14	PE11	PB1	PB8	PD7			Timer 1 Capture Compare input / output channel 1.
TIM1_CC2	PC15	PE12	PB2	PB11	PC13			Timer 1 Capture Compare input / output channel 2.
TIM2_CC0	PA8	PA12	PC8					Timer 2 Capture Compare input / output channel 0.
TIM2_CC1	PA9	PA13	PC9					Timer 2 Capture Compare input / output channel 1.
TIM2_CC2	PA10	PA14	PC10					Timer 2 Capture Compare input / output channel 2.
TIM3_CC0	PE14	PE0						Timer 3 Capture Compare input / output channel 0.
TIM3_CC1	PE15	PE1						Timer 3 Capture Compare input / output channel 1.
TIM3_CC2	PA15	PE2						Timer 3 Capture Compare input / output channel 2.
U0_RX	PF7	PE1	PA4	PC15				UART0 Receive input.
U0_TX	PF6	PE0	PA3	PC14				UART0 Transmit output. Also used as receive input in half duplex communication.
U1_RX	PC13	PF11	PB10	PE3				UART1 Receive input.
U1_TX	PC12	PF10	PB9	PE2				UART1 Transmit output. Also used as receive input in half duplex communication.
US0_CLK	PE12	PE5	PC9	PC15	PB13	PB13		USART0 clock input / output.
US0_CS	PE13	PE4	PC8	PC14	PB14	PB14		USART0 chip select input / output.
US0_RX	PE11	PE6	PC10	PE12	PB8	PC1		USART0 Asynchronous Receive. USART0 Synchronous mode Main Input / Secondary Output (MISO).
US0_TX	PE10	PE7	PC11	PE13	PB7	PC0		USART0 Asynchronous Transmit.Also used as receive input in half duplex communication. USART0 Synchronous mode Main Output / Secondary Input (MOSI).
US1_CLK	PB7	PD2	PF0					USART1 clock input / output.
US1_CS	PB8	PD3	PF1					USART1 chip select input / output.
US1_RX	PC1	PD1	PD6					USART1 Asynchronous Receive. USART1 Synchronous mode Main Input / Secondary Output (MISO).
US1_TX	PC0	PD0	PD7					USART1 Asynchronous Transmit.Also used as receive input in half duplex communication. USART1 Synchronous mode Main Output / Secondary Input (MOSI).
US2_CLK	PC4	PB5						USART2 clock input / output.
US2_CS	PC5	PB6						USART2 chip select input / output.
US2_RX	PC3	PB4						USART2 Asynchronous Receive. USART2 Synchronous mode Main Input / Secondary Output (MISO).

Alternate	LOCATION							
Functionality	0	1	2	3	4	5	6	Description
US2_TX	PC2	PB3						USART2 Asynchronous Transmit.Also used as receive input in half duplex communication. USART2 Synchronous mode Main Output / Secondary Input (MOSI).
USB_DM	PF10							USB D- pin.
USB_DMPU	PD2							USB D- Pullup control.
USB_DP	PF11							USB D+ pin.
USB_ID	PF12							USB ID pin. Used in OTG mode.
USB_VBUS	USB_ VBUS							USB 5 V VBUS input.
USB_VBUSEN	PF5							USB 5 V VBUS enable.
USB_VREGI	USB_ VREGI							USB Input to internal 3.3 V regulator
USB_VREGO	USB_ VRE-GO							USB Decoupling for internal 3.3 V USB regulator and regulator output

5.11.3 GPIO Pinout Overview

The specific GPIO pins available in EFM32WG395 are shown in the following table. Each GPIO port is organized as 16-bit ports indicated by letters A through F, and the individual pin on this port is indicated by a number from 15 down to 0.

Table 5.33. GPIO Pinout

Port	Pin 15	Pin 14	Pin 13	Pin 12	Pin 11	Pin 10	Pin 9	Pin 8	Pin 7	Pin 6	Pin 5	Pin 4	Pin 3	Pin 2	Pin 1	Pin 0
Port A	PA15	PA14	PA13	PA12	PA11	PA10	PA9	PA8	PA7	PA6	PA5	PA4	PA3	PA2	PA1	PA0
Port B	PB15	PB14	PB13	PB12	PB11	PB10	PB9	PB8	PB7	PB6	PB5	PB4	PB3	PB2	PB1	PB0
Port C	PC15	PC14	PC13	PC12	PC11	PC10	PC9	PC8	PC7	PC6	PC5	PC4	PC3	PC2	PC1	PC0
Port D	PD15	PD14	PD13	PD12	PD11	PD10	PD9	PD8	PD7	PD6	PD5	PD4	PD3	PD2	PD1	PD0
Port E	PE15	PE14	PE13	PE12	PE11	PE10	PE9	PE8	PE7	PE6	PE5	PE4	PE3	PE2	PE1	PE0
Port F	—	—	—	PF12	PF11	PF10	PF9	PF8	PF7	PF6	PF5	PF4	PF3	PF2	PF1	PF0

5.11.4 Opamp Pinout Overview

The specific opamp terminals available in EFM32WG395 is shown in the following figure.

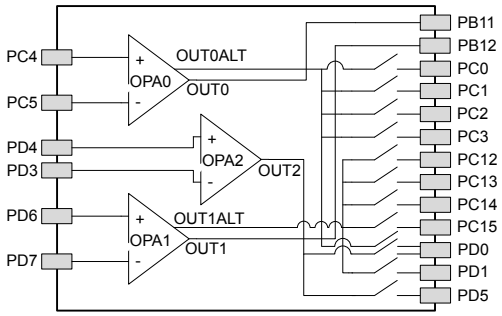

Figure 5.22. Opamp Pinout

5.12 EFM32WG840 (QFN64)

5.12.1 Pinout

The EFM32WG840 pinout is shown in the following figure and table. Alternate locations are denoted by "#" followed by the location number (Multiple locations on the same pin are split with "/"). Alternate locations can be configured in the LOCATION bitfield in the *_ROUTE register in the module in question.

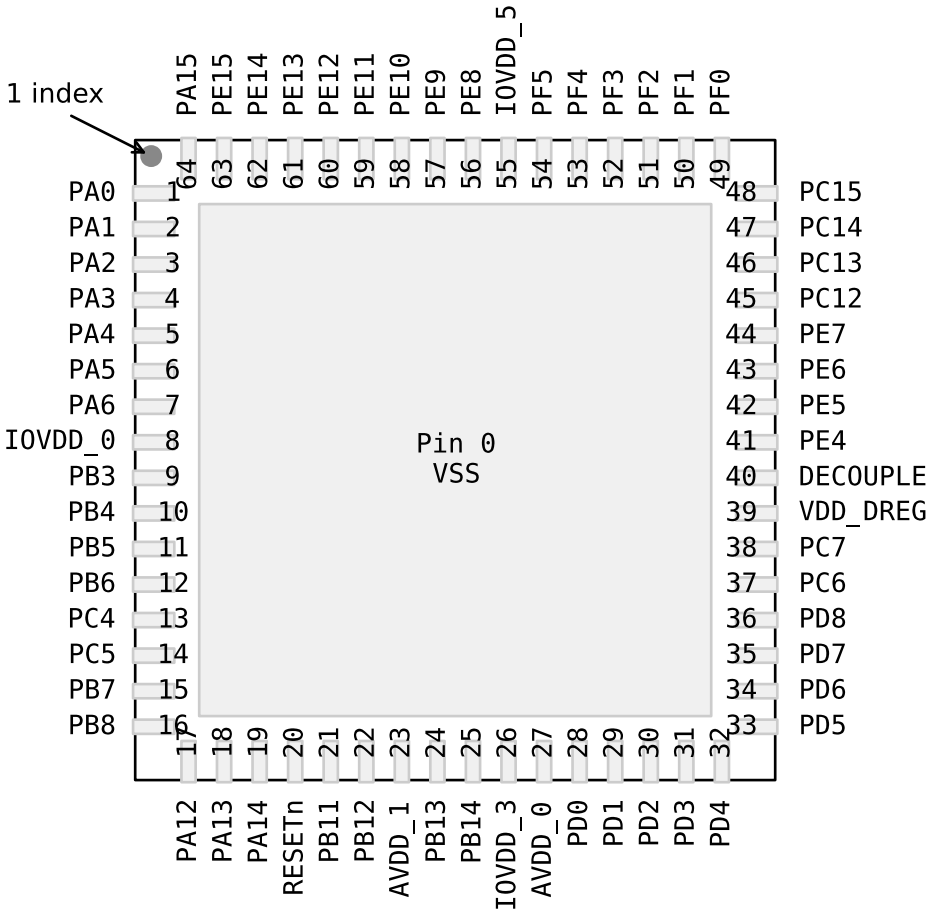

Figure 5.23. EFM32WG840 Pinout (top view, not to scale)

Table 5.34. Device Pinout

QFN64 Pin# and Name		Pin Alternate Functionality / Description			
Pin #	**Pin Name**	**Analog**	**Timers**	**Communication**	**Other**
0	VSS	Ground.			
1	PA0	LCD_SEG13	TIM0_CC0 #0/1/4	LEU0_RX #4 I2C0_SDA #0	PRS_CH0 #0 GPIO_EM4WU0
2	PA1	LCD_SEG14	TIM0_CC1 #0/1	I2C0_SCL #0	CMU_CLK1 #0 PRS_CH1 #0

QFN64 Pin# and Name		Pin Alternate Functionality / Description			
Pin #	Pin Name	Analog	Timers	Communication	Other
3	PA2	LCD_SEG15	TIM0_CC2 #0/1		CMU_CLK0 #0 ETM_TD0 #3
4	PA3	LCD_SEG16	TIM0_CDTI0 #0		LES_ALTEX2 #0 ETM_TD1 #3
5	PA4	LCD_SEG17	TIM0_CDTI1 #0		LES_ALTEX3 #0 ETM_TD2 #3
6	PA5	LCD_SEG18	TIM0_CDTI2 #0	LEU1_TX #1	LES_ALTEX4 #0 ETM_TD3 #3
7	PA6	LCD_SEG19		LEU1_RX #1	ETM_TCLK #3 GPIO_EM4WU1
8	IOVDD_0	Digital IO power supply 0.			
9	PB3	LCD_SEG20/ LCD_COM4	PCNT1_S0IN #1	US2_TX #1	
10	PB4	LCD_SEG21/ LCD_COM5	PCNT1_S1IN #1	US2_RX #1	
11	PB5	LCD_SEG22/ LCD_COM6		US2_CLK #1	
12	PB6	LCD_SEG23/ LCD_COM7		US2_CS #1	
13	PC4	ACMP0_CH4 / DAC0_P0 / OPAMP_P0	TIM0_CDTI2 #4 LE-TIM0_OUT0 #3 PCNT1_S0IN #0	US2_CLK #0 I2C1_SDA #0	LES_CH4 #0
14	PC5	ACMP0_CH5 / DAC0_N0 / OPAMP_N0	LETIM0_OUT1 #3 PCNT1_S1IN #0	US2_CS #0 I2C1_SCL #0	LES_CH5 #0
15	PB7	LFXTAL_P	TIM1_CC0 #3	US0_TX #4 US1_CLK #0	
16	PB8	LFXTAL_N	TIM1_CC1 #3	US0_RX #4 US1_CS #0	
17	PA12	LCD_BCAP_P	TIM2_CC0 #1		
18	PA13	LCD_BCAP_N	TIM2_CC1 #1		
19	PA14	LCD_BEXT	TIM2_CC2 #1		
20	RESETn	Reset input, active low. To apply an external reset source to this pin, it is required to only drive this pin low during reset, and let the internal pull-up ensure that reset is released.			
21	PB11	DAC0_OUT0 / OPAMP_OUT0	TIM1_CC2 #3 LE-TIM0_OUT0 #1	I2C1_SDA #1	
22	PB12	DAC0_OUT1 / OPAMP_OUT1	LETIM0_OUT1 #1	I2C1_SCL #1	
23	AVDD_1	Analog power supply 1.			
24	PB13	HFXTAL_P		US0_CLK #4/5 LEU0_TX #1	
25	PB14	HFXTAL_N		US0_CS #4/5 LEU0_RX #1	
26	IOVDD_3	Digital IO power supply 3.			
27	AVDD_0	Analog power supply 0.			

QFN64 Pin# and Name		Pin Alternate Functionality / Description			
Pin #	Pin Name	Analog	Timers	Communication	Other
28	PD0	ADC0_CH0 DAC0_OUT0ALT #4/ OPAMP_OUT0ALT OPAMP_OUT2 #1	PCNT2_S0IN #0	US1_TX #1	
29	PD1	ADC0_CH1 DAC0_OUT1ALT #4/ OPAMP_OUT1ALT	TIM0_CC0 #3 PCNT2_S1IN #0	US1_RX #1	DBG_SWO #2
30	PD2	ADC0_CH2	TIM0_CC1 #3	US1_CLK #1	DBG_SWO #3
31	PD3	ADC0_CH3 OPAMP_N2	TIM0_CC2 #3	US1_CS #1	ETM_TD1 #0/2
32	PD4	ADC0_CH4 OPAMP_P2		LEU0_TX #0	ETM_TD2 #0/2
33	PD5	ADC0_CH5 OPAMP_OUT2 #0		LEU0_RX #0	ETM_TD3 #0/2
34	PD6	ADC0_CH6 / DAC0_P1 / OPAMP_P1	TIM1_CC0 #4 LE-TIM0_OUT0 #0 PCNT0_S0IN #3	US1_RX #2 I2C0_SDA #1	LES_ALTEX0 #0 ACMP0_O #2 ETM_TD0 #0
35	PD7	ADC0_CH7 / DAC0_N1 / OPAMP_N1	TIM1_CC1 #4 LE-TIM0_OUT1 #0 PCNT0_S1IN #3	US1_TX #2 I2C0_SCL #1	CMU_CLK0 #2 LES_ALTEX1 #0 ACMP1_O #2 ETM_TCLK #0
36	PD8	BU_VIN			CMU_CLK1 #1
37	PC6	ACMP0_CH6		LEU1_TX #0 I2C0_SDA #2	LES_CH6 #0 ETM_TCLK #2
38	PC7	ACMP0_CH7		LEU1_RX #0 I2C0_SCL #2	LES_CH7 #0 ETM_TD0 #2
39	VDD_DREG	Power supply for on-chip voltage regulator.			
40	DECOUPLE	Decouple output for on-chip voltage regulator. An external capacitance of size $C_{DECOUPLE}$ is required at this pin.			
41	PE4	LCD_COM0		US0_CS #1	
42	PE5	LCD_COM1		US0_CLK #1	
43	PE6	LCD_COM2		US0_RX #1	
44	PE7	LCD_COM3		US0_TX #1	
45	PC12	ACMP1_CH4 DAC0_OUT1ALT #0/ OPAMP_OUT1ALT			CMU_CLK0 #1 LES_CH12 #0
46	PC13	ACMP1_CH5 DAC0_OUT1ALT #1/ OPAMP_OUT1ALT	TIM0_CDTI0 #1/3 TIM1_CC0 #0 TIM1_CC2 #4 PCNT0_S0IN #0		LES_CH13 #0
47	PC14	ACMP1_CH6 DAC0_OUT1ALT #2/ OPAMP_OUT1ALT	TIM0_CDTI1 #1/3 TIM1_CC1 #0 PCNT0_S1IN #0	US0_CS #3	LES_CH14 #0
48	PC15	ACMP1_CH7 DAC0_OUT1ALT #3/ OPAMP_OUT1ALT	TIM0_CDTI2 #1/3 TIM1_CC2 #0	US0_CLK #3	LES_CH15 #0 DBG_SWO #1
49	PF0		TIM0_CC0 #5 LE-TIM0_OUT0 #2	US1_CLK #2 LEU0_TX #3 I2C0_SDA #5	DBG_SWCLK #0/1/2/3

QFN64 Pin# and Name		Pin Alternate Functionality / Description			
Pin #	Pin Name	Analog	Timers	Communication	Other
50	PF1		TIM0_CC1 #5 LE-TIM0_OUT1 #2	US1_CS #2 LEU0_RX #3 I2C0_SCL #5	DBG_SWDIO #0/1/2/3 GPIO_EM4WU3
51	PF2	LCD_SEG0	TIM0_CC2 #5	LEU0_TX #4	ACMP1_O #0 DBG_SWO #0 GPIO_EM4WU4
52	PF3	LCD_SEG1	TIM0_CDTI0 #2/5		PRS_CH0 #1 ETM_TD3 #1
53	PF4	LCD_SEG2	TIM0_CDTI1 #2/5		PRS_CH1 #1
54	PF5	LCD_SEG3	TIM0_CDTI2 #2/5		PRS_CH2 #1
55	IOVDD_5	Digital IO power supply 5.			
56	PE8	LCD_SEG4	PCNT2_S0IN #1		PRS_CH3 #1
57	PE9	LCD_SEG5	PCNT2_S1IN #1		
58	PE10	LCD_SEG6	TIM1_CC0 #1	US0_TX #0	BOOT_TX
59	PE11	LCD_SEG7	TIM1_CC1 #1	US0_RX #0	LES_ALTEX5 #0 BOOT_RX
60	PE12	LCD_SEG8	TIM1_CC2 #1	US0_RX #3 US0_CLK #0 I2C0_SDA #6	CMU_CLK1 #2 LES_ALTEX6 #0
61	PE13	LCD_SEG9		US0_TX #3 US0_CS #0 I2C0_SCL #6	LES_ALTEX7 #0 ACMP0_O #0 GPIO_EM4WU5
62	PE14	LCD_SEG10	TIM3_CC0 #0	LEU0_TX #2	
63	PE15	LCD_SEG11	TIM3_CC1 #0	LEU0_RX #2	
64	PA15	LCD_SEG12	TIM3_CC2 #0		

5.12.2 Alternate Functionality Pinout

A wide selection of alternate functionality is available for multiplexing to various pins. This is shown in the following table. The table shows the name of the alternate functionality in the first column, followed by columns showing the possible LOCATION bitfield settings.

Note: Some functionality, such as analog interfaces, do not have alternate settings or a LOCATION bitfield. In these cases, the pinout is shown in the column corresponding to LOCATION 0.

Table 5.35. Alternate Functionality Overview

Alternate	LOCATION							
Functionality	0	1	2	3	4	5	6	Description
ACMP0_CH4	PC4							Analog comparator ACMP0, channel 4.
ACMP0_CH5	PC5							Analog comparator ACMP0, channel 5.
ACMP0_CH6	PC6							Analog comparator ACMP0, channel 6.
ACMP0_CH7	PC7							Analog comparator ACMP0, channel 7.
ACMP0_O	PE13		PD6					Analog comparator ACMP0, digital output.
ACMP1_CH4	PC12							Analog comparator ACMP1, channel 4.
ACMP1_CH5	PC13							Analog comparator ACMP1, channel 5.
ACMP1_CH6	PC14							Analog comparator ACMP1, channel 6.
ACMP1_CH7	PC15							Analog comparator ACMP1, channel 7.
ACMP1_O	PF2		PD7					Analog comparator ACMP1, digital output.
ADC0_CH0	PD0							Analog to digital converter ADC0, input channel number 0.
ADC0_CH1	PD1							Analog to digital converter ADC0, input channel number 1.
ADC0_CH2	PD2							Analog to digital converter ADC0, input channel number 2.
ADC0_CH3	PD3							Analog to digital converter ADC0, input channel number 3.
ADC0_CH4	PD4							Analog to digital converter ADC0, input channel number 4.
ADC0_CH5	PD5							Analog to digital converter ADC0, input channel number 5.
ADC0_CH6	PD6							Analog to digital converter ADC0, input channel number 6.
ADC0_CH7	PD7							Analog to digital converter ADC0, input channel number 7.
BOOT_RX	PE11							Bootloader RX.
BOOT_TX	PE10							Bootloader TX.
BU_VIN	PD8							Battery input for Backup Power Domain
CMU_CLK0	PA2	PC12	PD7					Clock Management Unit, clock output number 0.
CMU_CLK1	PA1	PD8	PE12					Clock Management Unit, clock output number 1.
DAC0_OUT0 / OPAMP_OUT0	PB11							Digital to Analog Converter DAC0_OUT0 /OPAMP output channel number 0.

Alternate	LOCATION							
Functionality	0	1	2	3	4	5	6	Description
DAC0_OUT0ALT / OPAMP_OUT0ALT					PD0			Digital to Analog Converter DAC0_OUT0ALT / OPAMP alternative output for channel 0.
DAC0_OUT1 / OPAMP_OUT1	PB12							Digital to Analog Converter DAC0_OUT1 / OPAMP output channel number 1.
DAC0_OUT1ALT / OPAMP_OUT1ALT	PC12	PC13	PC14	PC15	PD1			Digital to Analog Converter DAC0_OUT1ALT / OPAMP alternative output for channel 1.
DBG_SWCLK	PF0	PF0	PF0	PF0				Debug-interface Serial Wire clock input. Note that this function is enabled to pin out of reset, and has a built-in pull down.
DBG_SWDIO	PF1	PF1	PF1	PF1				Debug-interface Serial Wire data input / output. Note that this function is enabled to pin out of reset, and has a built-in pull up.
DBG_SWO	PF2	PC15	PD1	PD2				Debug-interface Serial Wire viewer Output. Note that this function is not enabled after reset, and must be enabled by software to be used.
ETM_TCLK	PD7		PC6	PA6				Embedded Trace Module ETM clock .
ETM_TD0	PD6		PC7	PA2				Embedded Trace Module ETM data 0.
ETM_TD1	PD3		PD3	PA3				Embedded Trace Module ETM data 1.
ETM_TD2	PD4		PD4	PA4				Embedded Trace Module ETM data 2.
ETM_TD3	PD5	PF3	PD5	PA5				Embedded Trace Module ETM data 3.
GPIO_EM4WU0	PA0							Pin can be used to wake the system up from EM4
GPIO_EM4WU1	PA6							Pin can be used to wake the system up from EM4
GPIO_EM4WU3	PF1							Pin can be used to wake the system up from EM4
GPIO_EM4WU4	PF2							Pin can be used to wake the system up from EM4
GPIO_EM4WU5	PE13							Pin can be used to wake the system up from EM4
HFXTAL_N	PB14							High Frequency Crystal negative pin. Also used as external optional clock input pin.
HFXTAL_P	PB13							High Frequency Crystal positive pin.
I2C0_SCL	PA1	PD7	PC7			PF1	PE13	I2C0 Serial Clock Line input / output.
I2C0_SDA	PA0	PD6	PC6			PF0	PE12	I2C0 Serial Data input / output.
I2C1_SCL	PC5	PB12						I2C1 Serial Clock Line input / output.
I2C1_SDA	PC4	PB11						I2C1 Serial Data input / output.
LCD_BCAP_N	PA13							LCD voltage booster (optional), boost capacitor, negative pin. If using the LCD voltage booster, connect a 22 nF capacitor between LCD_BCAP_N and LCD_BCAP_P.
LCD_BCAP_P	PA12							LCD voltage booster (optional), boost capacitor, positive pin. If using the LCD voltage booster, connect a 22 nF capacitor between LCD_BCAP_N and LCD_BCAP_P.

Alternate	LOCATION							
Functionality	0	1	2	3	4	5	6	Description
LCD_BEXT	PA14							LCD voltage booster (optional), boost output. If using the LCD voltage booster, connect a 1 uF capacitor between this pin and VSS. An external LCD voltage may also be applied to this pin if the booster is not enabled. If AVDD is used directly as the LCD supply voltage, this pin may be left unconnected or used as a GPIO.
LCD_COM0	PE4							LCD driver common line number 0.
LCD_COM1	PE5							LCD driver common line number 1.
LCD_COM2	PE6							LCD driver common line number 2.
LCD_COM3	PE7							LCD driver common line number 3.
LCD_SEG0	PF2							LCD segment line 0. Segments 0, 1, 2 and 3 are controlled by SEGEN0.
LCD_SEG1	PF3							LCD segment line 1. Segments 0, 1, 2 and 3 are controlled by SEGEN0.
LCD_SEG2	PF4							LCD segment line 2. Segments 0, 1, 2 and 3 are controlled by SEGEN0.
LCD_SEG3	PF5							LCD segment line 3. Segments 0, 1, 2 and 3 are controlled by SEGEN0.
LCD_SEG4	PE8							LCD segment line 4. Segments 4, 5, 6 and 7 are controlled by SEGEN1.
LCD_SEG5	PE9							LCD segment line 5. Segments 4, 5, 6 and 7 are controlled by SEGEN1.
LCD_SEG6	PE10							LCD segment line 6. Segments 4, 5, 6 and 7 are controlled by SEGEN1.
LCD_SEG7	PE11							LCD segment line 7. Segments 4, 5, 6 and 7 are controlled by SEGEN1.
LCD_SEG8	PE12							LCD segment line 8. Segments 8, 9, 10 and 11 are controlled by SEGEN2.
LCD_SEG9	PE13							LCD segment line 9. Segments 8, 9, 10 and 11 are controlled by SEGEN2.
LCD_SEG10	PE14							LCD segment line 10. Segments 8, 9, 10 and 11 are controlled by SEGEN2.
LCD_SEG11	PE15							LCD segment line 11. Segments 8, 9, 10 and 11 are controlled by SEGEN2.
LCD_SEG12	PA15							LCD segment line 12. Segments 12, 13, 14 and 15 are controlled by SEGEN3.
LCD_SEG13	PA0							LCD segment line 13. Segments 12, 13, 14 and 15 are controlled by SEGEN3.
LCD_SEG14	PA1							LCD segment line 14. Segments 12, 13, 14 and 15 are controlled by SEGEN3.
LCD_SEG15	PA2							LCD segment line 15. Segments 12, 13, 14 and 15 are controlled by SEGEN3.
LCD_SEG16	PA3							LCD segment line 16. Segments 16, 17, 18 and 19 are controlled by SEGEN4.

Alternate	LOCATION							
Functionality	0	1	2	3	4	5	6	Description
LCD_SEG17	PA4							LCD segment line 17. Segments 16, 17, 18 and 19 are controlled by SEGEN4.
LCD_SEG18	PA5							LCD segment line 18. Segments 16, 17, 18 and 19 are controlled by SEGEN4.
LCD_SEG19	PA6							LCD segment line 19. Segments 16, 17, 18 and 19 are controlled by SEGEN4.
LCD_SEG20/ LCD_COM4	PB3							LCD segment line 20. Segments 20, 21, 22 and 23 are controlled by SEGEN5. This pin may also be used as LCD COM line 4
LCD_SEG21/ LCD_COM5	PB4							LCD segment line 21. Segments 20, 21, 22 and 23 are controlled by SEGEN5. This pin may also be used as LCD COM line 5
LCD_SEG22/ LCD_COM6	PB5							LCD segment line 22. Segments 20, 21, 22 and 23 are controlled by SEGEN5. This pin may also be used as LCD COM line 6
LCD_SEG23/ LCD_COM7	PB6							LCD segment line 23. Segments 20, 21, 22 and 23 are controlled by SEGEN5. This pin may also be used as LCD COM line 7
LES_ALTEX0	PD6							LESENSE alternate exite output 0.
LES_ALTEX1	PD7							LESENSE alternate exite output 1.
LES_ALTEX2	PA3							LESENSE alternate exite output 2.
LES_ALTEX3	PA4							LESENSE alternate exite output 3.
LES_ALTEX4	PA5							LESENSE alternate exite output 4.
LES_ALTEX5	PE11							LESENSE alternate exite output 5.
LES_ALTEX6	PE12							LESENSE alternate exite output 6.
LES_ALTEX7	PE13							LESENSE alternate exite output 7.
LES_CH4	PC4							LESENSE channel 4.
LES_CH5	PC5							LESENSE channel 5.
LES_CH6	PC6							LESENSE channel 6.
LES_CH7	PC7							LESENSE channel 7.
LES_CH12	PC12							LESENSE channel 12.
LES_CH13	PC13							LESENSE channel 13.
LES_CH14	PC14							LESENSE channel 14.
LES_CH15	PC15							LESENSE channel 15.
LETIM0_OUT0	PD6	PB11	PF0	PC4				Low Energy Timer LETIM0, output channel 0.
LETIM0_OUT1	PD7	PB12	PF1	PC5				Low Energy Timer LETIM0, output channel 1.
LEU0_RX	PD5	PB14	PE15	PF1	PA0			LEUART0 Receive input.
LEU0_TX	PD4	PB13	PE14	PF0	PF2			LEUART0 Transmit output. Also used as receive input in half duplex communication.
LEU1_RX	PC7	PA6						LEUART1 Receive input.

Alternate	LOCATION							
Functionality	0	1	2	3	4	5	6	Description
LEU1_TX	PC6	PA5						LEUART1 Transmit output. Also used as receive input in half duplex communication.
LFXTAL_N	PB8							Low Frequency Crystal (typically 32.768 kHz) negative pin. Also used as an optional external clock input pin.
LFXTAL_P	PB7							Low Frequency Crystal (typically 32.768 kHz) positive pin.
OPAMP_N0 / DAC0_N0	PC5							Operational Amplifier 0 external negative input.
OPAMP_N1 / DAC0_N1	PD7							Operational Amplifier 1 external negative input.
OPAMP_N2	PD3							Operational Amplifier 2 external negative input.
OPAMP_OUT2	PD5	PD0						Operational Amplifier 2 output.
OPAMP_P0 / DAC0_P0	PC4							Operational Amplifier 0 external positive input.
OPAMP_P1 / DAC0_P1	PD6							Operational Amplifier 1 external positive input.
OPAMP_P2	PD4							Operational Amplifier 2 external positive input.
PCNT0_S0IN	PC13			PD6				Pulse Counter PCNT0 input number 0.
PCNT0_S1IN	PC14			PD7				Pulse Counter PCNT0 input number 1.
PCNT1_S0IN	PC4	PB3						Pulse Counter PCNT1 input number 0.
PCNT1_S1IN	PC5	PB4						Pulse Counter PCNT1 input number 1.
PCNT2_S0IN	PD0	PE8						Pulse Counter PCNT2 input number 0.
PCNT2_S1IN	PD1	PE9						Pulse Counter PCNT2 input number 1.
PRS_CH0	PA0	PF3						Peripheral Reflex System PRS, channel 0.
PRS_CH1	PA1	PF4						Peripheral Reflex System PRS, channel 1.
PRS_CH2		PF5						Peripheral Reflex System PRS, channel 2.
PRS_CH3		PE8						Peripheral Reflex System PRS, channel 3.
TIM0_CC0	PA0	PA0		PD1	PA0	PF0		Timer 0 Capture Compare input / output channel 0.
TIM0_CC1	PA1	PA1		PD2		PF1		Timer 0 Capture Compare input / output channel 1.
TIM0_CC2	PA2	PA2		PD3		PF2		Timer 0 Capture Compare input / output channel 2.
TIM0_CDTI0	PA3	PC13	PF3	PC13		PF3		Timer 0 Complimentary Dead Time Insertion channel 0.
TIM0_CDTI1	PA4	PC14	PF4	PC14		PF4		Timer 0 Complimentary Dead Time Insertion channel 1.
TIM0_CDTI2	PA5	PC15	PF5	PC15	PC4	PF5		Timer 0 Complimentary Dead Time Insertion channel 2.
TIM1_CC0	PC13	PE10		PB7	PD6			Timer 1 Capture Compare input / output channel 0.
TIM1_CC1	PC14	PE11		PB8	PD7			Timer 1 Capture Compare input / output channel 1.
TIM1_CC2	PC15	PE12		PB11	PC13			Timer 1 Capture Compare input / output channel 2.
TIM2_CC0		PA12						Timer 2 Capture Compare input / output channel 0.

Alternate	LOCATION							
Functionality	0	1	2	3	4	5	6	Description
TIM2_CC1		PA13						Timer 2 Capture Compare input / output channel 1.
TIM2_CC2		PA14						Timer 2 Capture Compare input / output channel 2.
TIM3_CC0	PE14							Timer 3 Capture Compare input / output channel 0.
TIM3_CC1	PE15							Timer 3 Capture Compare input / output channel 1.
TIM3_CC2	PA15							Timer 3 Capture Compare input / output channel 2.
US0_CLK	PE12	PE5		PC15	PB13	PB13		USART0 clock input / output.
US0_CS	PE13	PE4		PC14	PB14	PB14		USART0 chip select input / output.
US0_RX	PE11	PE6		PE12	PB8			USART0 Asynchronous Receive. USART0 Synchronous mode Main Input / Secondary Output (MISO).
US0_TX	PE10	PE7		PE13	PB7			USART0 Asynchronous Transmit.Also used as receive input in half duplex communication. USART0 Synchronous mode Main Output / Secondary Input (MOSI).
US1_CLK	PB7	PD2	PF0					USART1 clock input / output.
US1_CS	PB8	PD3	PF1					USART1 chip select input / output.
US1_RX		PD1	PD6					USART1 Asynchronous Receive. USART1 Synchronous mode Main Input / Secondary Output (MISO).
US1_TX		PD0	PD7					USART1 Asynchronous Transmit.Also used as receive input in half duplex communication. USART1 Synchronous mode Main Output / Secondary Input (MOSI).
US2_CLK	PC4	PB5						USART2 clock input / output.
US2_CS	PC5	PB6						USART2 chip select input / output.
US2_RX		PB4						USART2 Asynchronous Receive. USART2 Synchronous mode Main Input / Secondary Output (MISO).
US2_TX		PB3						USART2 Asynchronous Transmit.Also used as receive input in half duplex communication. USART2 Synchronous mode Main Output / Secondary Input (MOSI).

5.12.3 GPIO Pinout Overview

The specific GPIO pins available in EFM32WG840 are shown in the following table. Each GPIO port is organized as 16-bit ports indicated by letters A through F, and the individual pin on this port is indicated by a number from 15 down to 0.

Table 5.36. GPIO Pinout

Port	Pin 15	Pin 14	Pin 13	Pin 12	Pin 11	Pin 10	Pin 9	Pin 8	Pin 7	Pin 6	Pin 5	Pin 4	Pin 3	Pin 2	Pin 1	Pin 0
Port A	PA15	PA14	PA13	PA12	—	—	—	—	—	PA6	PA5	PA4	PA3	PA2	PA1	PA0
Port B	—	PB14	PB13	PB12	PB11	—	—	PB8	PB7	PB6	PB5	PB4	PB3	—	—	—
Port C	PC15	PC14	PC13	PC12	—	—	—	—	PC7	PC6	PC5	PC4	—	—	—	—
Port D	—	—	—	—	—	—	—	PD8	PD7	PD6	PD5	PD4	PD3	PD2	PD1	PD0
Port E	PE15	PE14	PE13	PE12	PE11	PE10	PE9	PE8	PE7	PE6	PE5	PE4	—	—	—	—
Port F	—	—	—	—	—	—	—	—	—	—	PF5	PF4	PF3	PF2	PF1	PF0

5.12.4 Opamp Pinout Overview

The specific opamp terminals available in EFM32WG840 is shown in the following figure.

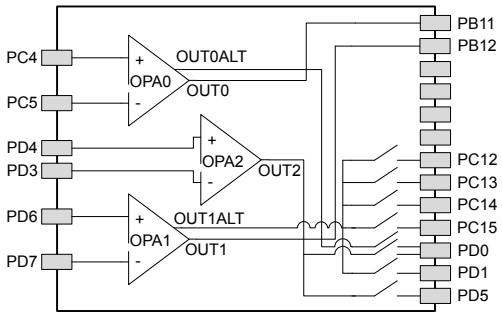

Figure 5.24. Opamp Pinout

5.13 EFM32WG842 (TQFP64)

5.13.1 Pinout

The EFM32WG842 pinout is shown in the following figure and table. Alternate locations are denoted by "#" followed by the location number (Multiple locations on the same pin are split with "/"). Alternate locations can be configured in the LOCATION bitfield in the *_ROUTE register in the module in question.

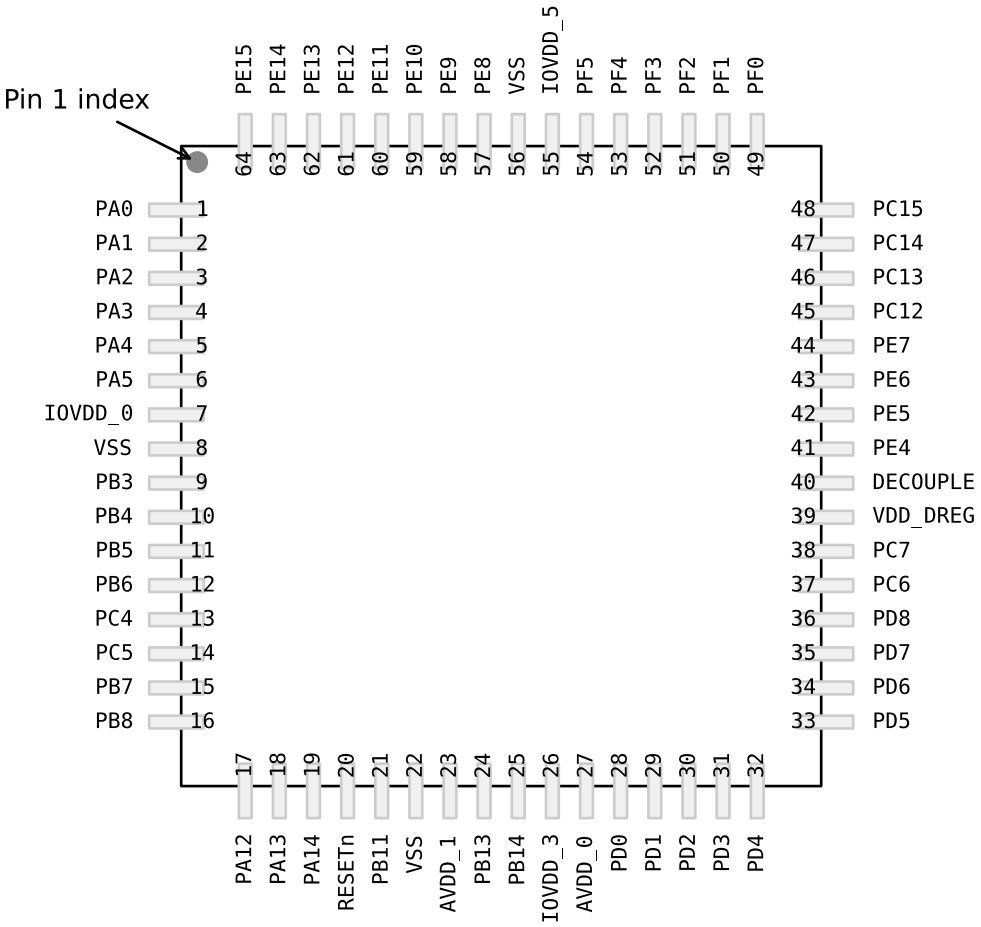

Figure 5.25. EFM32WG842 Pinout (top view, not to scale)

Table 5.37. Device Pinout

QFP64 Pin# and Name		Pin Alternate Functionality / Description			
Pin #	**Pin Name**	**Analog**	**Timers**	**Communication**	**Other**
1	PA0	LCD_SEG13	TIM0_CC0 #0/1/4	LEU0_RX #4 I2C0_SDA #0	PRS_CH0 #0 GPIO_EM4WU0
2	PA1	LCD_SEG14	TIM0_CC1 #0/1	I2C0_SCL #0	CMU_CLK1 #0 PRS_CH1 #0
3	PA2	LCD_SEG15	TIM0_CC2 #0/1		CMU_CLK0 #0 ETM_TD0 #3

QFP64 Pin# and Name		Pin Alternate Functionality / Description			
Pin #	Pin Name	Analog	Timers	Communication	Other
4	PA3	LCD_SEG16	TIM0_CDTI0 #0		LES_ALTEX2 #0 ETM_TD1 #3
5	PA4	LCD_SEG17	TIM0_CDTI1 #0		LES_ALTEX3 #0 ETM_TD2 #3
6	PA5	LCD_SEG18	TIM0_CDTI2 #0	LEU1_TX #1	LES_ALTEX4 #0 ETM_TD3 #3
7	IOVDD_0	Digital IO power supply 0.			
8	VSS	Ground.			
9	PB3	LCD_SEG20/ LCD_COM4	PCNT1_S0IN #1	US2_TX #1	
10	PB4	LCD_SEG21/ LCD_COM5	PCNT1_S1IN #1	US2_RX #1	
11	PB5	LCD_SEG22/ LCD_COM6		US2_CLK #1	
12	PB6	LCD_SEG23/ LCD_COM7		US2_CS #1	
13	PC4	ACMP0_CH4 / DAC0_P0 / OPAMP_P0	TIM0_CDTI2 #4 LE-TIM0_OUT0 #3 PCNT1_S0IN #0	US2_CLK #0 I2C1_SDA #0	LES_CH4 #0
14	PC5	ACMP0_CH5 / DAC0_N0 / OPAMP_N0	LETIM0_OUT1 #3 PCNT1_S1IN #0	US2_CS #0 I2C1_SCL #0	LES_CH5 #0
15	PB7	LFXTAL_P	TIM1_CC0 #3	US0_TX #4 US1_CLK #0	
16	PB8	LFXTAL_N	TIM1_CC1 #3	US0_RX #4 US1_CS #0	
17	PA12	LCD_BCAP_P	TIM2_CC0 #1		
18	PA13	LCD_BCAP_N	TIM2_CC1 #1		
19	PA14	LCD_BEXT	TIM2_CC2 #1		
20	RESETn	Reset input, active low. To apply an external reset source to this pin, it is required to only drive this pin low during reset, and let the internal pull-up ensure that reset is released.			
21	PB11	DAC0_OUT0 / OPAMP_OUT0	TIM1_CC2 #3 LE-TIM0_OUT0 #1	I2C1_SDA #1	
22	VSS	Ground.			
23	AVDD_1	Analog power supply 1.			
24	PB13	HFXTAL_P		US0_CLK #4/5 LEU0_TX #1	
25	PB14	HFXTAL_N		US0_CS #4/5 LEU0_RX #1	
26	IOVDD_3	Digital IO power supply 3.			
27	AVDD_0	Analog power supply 0.			
28	PD0	ADC0_CH0 DAC0_OUT0ALT #4/ OPAMP_OUT0ALT OPAMP_OUT2 #1	PCNT2_S0IN #0	US1_TX #1	

QFP64 Pin# and Name		Pin Alternate Functionality / Description			
Pin #	Pin Name	Analog	Timers	Communication	Other
29	PD1	ADC0_CH1 DAC0_OUT1ALT #4/ OPAMP_OUT1ALT	TIM0_CC0 #3 PCNT2_S1IN #0	US1_RX #1	DBG_SWO #2
30	PD2	ADC0_CH2	TIM0_CC1 #3	US1_CLK #1	DBG_SWO #3
31	PD3	ADC0_CH3 OPAMP_N2	TIM0_CC2 #3	US1_CS #1	ETM_TD1 #0/2
32	PD4	ADC0_CH4 OPAMP_P2		LEU0_TX #0	ETM_TD2 #0/2
33	PD5	ADC0_CH5 OPAMP_OUT2 #0		LEU0_RX #0	ETM_TD3 #0/2
34	PD6	ADC0_CH6 / DAC0_P1 / OPAMP_P1	TIM1_CC0 #4 LE-TIM0_OUT0 #0 PCNT0_S0IN #3	US1_RX #2 I2C0_SDA #1	LES_ALTEX0 #0 ACMP0_O #2 ETM_TD0 #0
35	PD7	ADC0_CH7 / DAC0_N1 / OPAMP_N1	TIM1_CC1 #4 LE-TIM0_OUT1 #0 PCNT0_S1IN #3	US1_TX #2 I2C0_SCL #1	CMU_CLK0 #2 LES_ALTEX1 #0 ACMP1_O #2 ETM_TCLK #0
36	PD8	BU_VIN			CMU_CLK1 #1
37	PC6	ACMP0_CH6		LEU1_TX #0 I2C0_SDA #2	LES_CH6 #0 ETM_TCLK #2
38	PC7	ACMP0_CH7		LEU1_RX #0 I2C0_SCL #2	LES_CH7 #0 ETM_TD0 #2
39	VDD_DREG	Power supply for on-chip voltage regulator.			
40	DECOUPLE	Decouple output for on-chip voltage regulator. An external capacitance of size $C_{DECOUPLE}$ is required at this pin.			
41	PE4	LCD_COM0		US0_CS #1	
42	PE5	LCD_COM1		US0_CLK #1	
43	PE6	LCD_COM2		US0_RX #1	
44	PE7	LCD_COM3		US0_TX #1	
45	PC12	ACMP1_CH4 DAC0_OUT1ALT #0/ OPAMP_OUT1ALT			CMU_CLK0 #1 LES_CH12 #0
46	PC13	ACMP1_CH5 DAC0_OUT1ALT #1/ OPAMP_OUT1ALT	TIM0_CDTI0 #1/3 TIM1_CC0 #0 TIM1_CC2 #4 PCNT0_S0IN #0		LES_CH13 #0
47	PC14	ACMP1_CH6 DAC0_OUT1ALT #2/ OPAMP_OUT1ALT	TIM0_CDTI1 #1/3 TIM1_CC1 #0 PCNT0_S1IN #0	US0_CS #3	LES_CH14 #0
48	PC15	ACMP1_CH7 DAC0_OUT1ALT #3/ OPAMP_OUT1ALT	TIM0_CDTI2 #1/3 TIM1_CC2 #0	US0_CLK #3	LES_CH15 #0 DBG_SWO #1
49	PF0		TIM0_CC0 #5 LE-TIM0_OUT0 #2	US1_CLK #2 LEU0_TX #3 I2C0_SDA #5	DBG_SWCLK #0/1/2/3
50	PF1		TIM0_CC1 #5 LE-TIM0_OUT1 #2	US1_CS #2 LEU0_RX #3 I2C0_SCL #5	DBG_SWDIO #0/1/2/3 GPIO_EM4WU3

QFP64 Pin# and Name		Pin Alternate Functionality / Description			
Pin #	Pin Name	Analog	Timers	Communication	Other
51	PF2	LCD_SEG0	TIM0_CC2 #5	LEU0_TX #4	ACMP1_O #0 DBG_SWO #0 GPIO_EM4WU4
52	PF3	LCD_SEG1	TIM0_CDTI0 #2/5		PRS_CH0 #1 ETM_TD3 #1
53	PF4	LCD_SEG2	TIM0_CDTI1 #2/5		PRS_CH1 #1
54	PF5	LCD_SEG3	TIM0_CDTI2 #2/5		PRS_CH2 #1
55	IOVDD_5	Digital IO power supply 5.			
56	VSS	Ground.			
57	PE8	LCD_SEG4	PCNT2_S0IN #1		PRS_CH3 #1
58	PE9	LCD_SEG5	PCNT2_S1IN #1		
59	PE10	LCD_SEG6	TIM1_CC0 #1	US0_TX #0	BOOT_TX
60	PE11	LCD_SEG7	TIM1_CC1 #1	US0_RX #0	LES_ALTEX5 #0 BOOT_RX
61	PE12	LCD_SEG8	TIM1_CC2 #1	US0_RX #3 US0_CLK #0 I2C0_SDA #6	CMU_CLK1 #2 LES_ALTEX6 #0
62	PE13	LCD_SEG9		US0_TX #3 US0_CS #0 I2C0_SCL #6	LES_ALTEX7 #0 ACMP0_O #0 GPIO_EM4WU5
63	PE14	LCD_SEG10	TIM3_CC0 #0	LEU0_TX #2	
64	PE15	LCD_SEG11	TIM3_CC1 #0	LEU0_RX #2	

5.13.2 Alternate Functionality Pinout

A wide selection of alternate functionality is available for multiplexing to various pins. This is shown in the following table. The table shows the name of the alternate functionality in the first column, followed by columns showing the possible LOCATION bitfield settings.

Note: Some functionality, such as analog interfaces, do not have alternate settings or a LOCATION bitfield. In these cases, the pinout is shown in the column corresponding to LOCATION 0.

Table 5.38. Alternate Functionality Overview

Alternate	LOCATION							
Functionality	0	1	2	3	4	5	6	Description
ACMP0_CH4	PC4							Analog comparator ACMP0, channel 4.
ACMP0_CH5	PC5							Analog comparator ACMP0, channel 5.
ACMP0_CH6	PC6							Analog comparator ACMP0, channel 6.
ACMP0_CH7	PC7							Analog comparator ACMP0, channel 7.
ACMP0_O	PE13		PD6					Analog comparator ACMP0, digital output.
ACMP1_CH4	PC12							Analog comparator ACMP1, channel 4.
ACMP1_CH5	PC13							Analog comparator ACMP1, channel 5.
ACMP1_CH6	PC14							Analog comparator ACMP1, channel 6.
ACMP1_CH7	PC15							Analog comparator ACMP1, channel 7.
ACMP1_O	PF2		PD7					Analog comparator ACMP1, digital output.
ADC0_CH0	PD0							Analog to digital converter ADC0, input channel number 0.
ADC0_CH1	PD1							Analog to digital converter ADC0, input channel number 1.
ADC0_CH2	PD2							Analog to digital converter ADC0, input channel number 2.
ADC0_CH3	PD3							Analog to digital converter ADC0, input channel number 3.
ADC0_CH4	PD4							Analog to digital converter ADC0, input channel number 4.
ADC0_CH5	PD5							Analog to digital converter ADC0, input channel number 5.
ADC0_CH6	PD6							Analog to digital converter ADC0, input channel number 6.
ADC0_CH7	PD7							Analog to digital converter ADC0, input channel number 7.
BOOT_RX	PE11							Bootloader RX.
BOOT_TX	PE10							Bootloader TX.
BU_VIN	PD8							Battery input for Backup Power Domain
CMU_CLK0	PA2	PC12	PD7					Clock Management Unit, clock output number 0.
CMU_CLK1	PA1	PD8	PE12					Clock Management Unit, clock output number 1.
DAC0_OUT0 / OPAMP_OUT0	PB11							Digital to Analog Converter DAC0_OUT0 /OPAMP output channel number 0.

Alternate	LOCATION							
Functionality	0	1	2	3	4	5	6	Description
DAC0_OUT0ALT / OPAMP_OUT0ALT					PD0			Digital to Analog Converter DAC0_OUT0ALT / OPAMP alternative output for channel 0.
DAC0_OUT1ALT / OPAMP_OUT1ALT	PC12	PC13	PC14	PC15	PD1			Digital to Analog Converter DAC0_OUT1ALT / OPAMP alternative output for channel 1.
DBG_SWCLK	PF0	PF0	PF0	PF0				Debug-interface Serial Wire clock input. Note that this function is enabled to pin out of reset, and has a built-in pull down.
DBG_SWDIO	PF1	PF1	PF1	PF1				Debug-interface Serial Wire data input / output. Note that this function is enabled to pin out of reset, and has a built-in pull up.
DBG_SWO	PF2	PC15	PD1	PD2				Debug-interface Serial Wire viewer Output. Note that this function is not enabled after reset, and must be enabled by software to be used.
ETM_TCLK	PD7		PC6					Embedded Trace Module ETM clock .
ETM_TD0	PD6		PC7	PA2				Embedded Trace Module ETM data 0.
ETM_TD1	PD3		PD3	PA3				Embedded Trace Module ETM data 1.
ETM_TD2	PD4		PD4	PA4				Embedded Trace Module ETM data 2.
ETM_TD3	PD5	PF3	PD5	PA5				Embedded Trace Module ETM data 3.
GPIO_EM4WU0	PA0							Pin can be used to wake the system up from EM4
GPIO_EM4WU3	PF1							Pin can be used to wake the system up from EM4
GPIO_EM4WU4	PF2							Pin can be used to wake the system up from EM4
GPIO_EM4WU5	PE13							Pin can be used to wake the system up from EM4
HFXTAL_N	PB14							High Frequency Crystal negative pin. Also used as external optional clock input pin.
HFXTAL_P	PB13							High Frequency Crystal positive pin.
I2C0_SCL	PA1	PD7	PC7			PF1	PE13	I2C0 Serial Clock Line input / output.
I2C0_SDA	PA0	PD6	PC6			PF0	PE12	I2C0 Serial Data input / output.
I2C1_SCL	PC5							I2C1 Serial Clock Line input / output.
I2C1_SDA	PC4							I2C1 Serial Data input / output.
LCD_BCAP_N	PA13							LCD voltage booster (optional), boost capacitor, negative pin. If using the LCD voltage booster, connect a 22 nF capacitor between LCD_BCAP_N and LCD_BCAP_P.
LCD_BCAP_P	PA12							LCD voltage booster (optional), boost capacitor, positive pin. If using the LCD voltage booster, connect a 22 nF capacitor between LCD_BCAP_N and LCD_BCAP_P.

Alternate	LOCATION							
Functionality	0	1	2	3	4	5	6	Description
LCD_BEXT	PA14							LCD voltage booster (optional), boost output. If using the LCD voltage booster, connect a 1 uF capacitor between this pin and VSS. An external LCD voltage may also be applied to this pin if the booster is not enabled. If AVDD is used directly as the LCD supply voltage, this pin may be left unconnected or used as a GPIO.
LCD_COM0	PE4							LCD driver common line number 0.
LCD_COM1	PE5							LCD driver common line number 1.
LCD_COM2	PE6							LCD driver common line number 2.
LCD_COM3	PE7							LCD driver common line number 3.
LCD_SEG0	PF2							LCD segment line 0. Segments 0, 1, 2 and 3 are controlled by SEGEN0.
LCD_SEG1	PF3							LCD segment line 1. Segments 0, 1, 2 and 3 are controlled by SEGEN0.
LCD_SEG2	PF4							LCD segment line 2. Segments 0, 1, 2 and 3 are controlled by SEGEN0.
LCD_SEG3	PF5							LCD segment line 3. Segments 0, 1, 2 and 3 are controlled by SEGEN0.
LCD_SEG4	PE8							LCD segment line 4. Segments 4, 5, 6 and 7 are controlled by SEGEN1.
LCD_SEG5	PE9							LCD segment line 5. Segments 4, 5, 6 and 7 are controlled by SEGEN1.
LCD_SEG6	PE10							LCD segment line 6. Segments 4, 5, 6 and 7 are controlled by SEGEN1.
LCD_SEG7	PE11							LCD segment line 7. Segments 4, 5, 6 and 7 are controlled by SEGEN1.
LCD_SEG8	PE12							LCD segment line 8. Segments 8, 9, 10 and 11 are controlled by SEGEN2.
LCD_SEG9	PE13							LCD segment line 9. Segments 8, 9, 10 and 11 are controlled by SEGEN2.
LCD_SEG10	PE14							LCD segment line 10. Segments 8, 9, 10 and 11 are controlled by SEGEN2.
LCD_SEG11	PE15							LCD segment line 11. Segments 8, 9, 10 and 11 are controlled by SEGEN2.
LCD_SEG13	PA0							LCD segment line 13. Segments 12, 13, 14 and 15 are controlled by SEGEN3.
LCD_SEG14	PA1							LCD segment line 14. Segments 12, 13, 14 and 15 are controlled by SEGEN3.
LCD_SEG15	PA2							LCD segment line 15. Segments 12, 13, 14 and 15 are controlled by SEGEN3.
LCD_SEG16	PA3							LCD segment line 16. Segments 16, 17, 18 and 19 are controlled by SEGEN4.
LCD_SEG17	PA4							LCD segment line 17. Segments 16, 17, 18 and 19 are controlled by SEGEN4.

Alternate	LOCATION							
Functionality	0	1	2	3	4	5	6	Description
LCD_SEG18	PA5							LCD segment line 18. Segments 16, 17, 18 and 19 are controlled by SEGEN4.
LCD_SEG20/ LCD_COM4	PB3							LCD segment line 20. Segments 20, 21, 22 and 23 are controlled by SEGEN5. This pin may also be used as LCD COM line 4
LCD_SEG21/ LCD_COM5	PB4							LCD segment line 21. Segments 20, 21, 22 and 23 are controlled by SEGEN5. This pin may also be used as LCD COM line 5
LCD_SEG22/ LCD_COM6	PB5							LCD segment line 22. Segments 20, 21, 22 and 23 are controlled by SEGEN5. This pin may also be used as LCD COM line 6
LCD_SEG23/ LCD_COM7	PB6							LCD segment line 23. Segments 20, 21, 22 and 23 are controlled by SEGEN5. This pin may also be used as LCD COM line 7
LES_ALTEX0	PD6							LESENSE alternate exite output 0.
LES_ALTEX1	PD7							LESENSE alternate exite output 1.
LES_ALTEX2	PA3							LESENSE alternate exite output 2.
LES_ALTEX3	PA4							LESENSE alternate exite output 3.
LES_ALTEX4	PA5							LESENSE alternate exite output 4.
LES_ALTEX5	PE11							LESENSE alternate exite output 5.
LES_ALTEX6	PE12							LESENSE alternate exite output 6.
LES_ALTEX7	PE13							LESENSE alternate exite output 7.
LES_CH4	PC4							LESENSE channel 4.
LES_CH5	PC5							LESENSE channel 5.
LES_CH6	PC6							LESENSE channel 6.
LES_CH7	PC7							LESENSE channel 7.
LES_CH12	PC12							LESENSE channel 12.
LES_CH13	PC13							LESENSE channel 13.
LES_CH14	PC14							LESENSE channel 14.
LES_CH15	PC15							LESENSE channel 15.
LETIM0_OUT0	PD6	PB11	PF0	PC4				Low Energy Timer LETIM0, output channel 0.
LETIM0_OUT1	PD7		PF1	PC5				Low Energy Timer LETIM0, output channel 1.
LEU0_RX	PD5	PB14	PE15	PF1	PA0			LEUART0 Receive input.
LEU0_TX	PD4	PB13	PE14	PF0	PF2			LEUART0 Transmit output. Also used as receive input in half duplex communication.
LEU1_RX	PC7							LEUART1 Receive input.
LEU1_TX	PC6	PA5						LEUART1 Transmit output. Also used as receive input in half duplex communication.
LFXTAL_N	PB8							Low Frequency Crystal (typically 32.768 kHz) negative pin. Also used as an optional external clock input pin.

Alternate	LOCATION							
Functionality	0	1	2	3	4	5	6	Description
LFXTAL_P	PB7							Low Frequency Crystal (typically 32.768 kHz) positive pin.
OPAMP_N0 / DAC0_N0	PC5							Operational Amplifier 0 external negative input.
OPAMP_N1 / DAC0_N1	PD7							Operational Amplifier 1 external negative input.
OPAMP_N2	PD3							Operational Amplifier 2 external negative input.
OPAMP_OUT2	PD5	PD0						Operational Amplifier 2 output.
OPAMP_P0 / DAC0_P0	PC4							Operational Amplifier 0 external positive input.
OPAMP_P1 / DAC0_P1	PD6							Operational Amplifier 1 external positive input.
OPAMP_P2	PD4							Operational Amplifier 2 external positive input.
PCNT0_S0IN	PC13			PD6				Pulse Counter PCNT0 input number 0.
PCNT0_S1IN	PC14			PD7				Pulse Counter PCNT0 input number 1.
PCNT1_S0IN	PC4	PB3						Pulse Counter PCNT1 input number 0.
PCNT1_S1IN	PC5	PB4						Pulse Counter PCNT1 input number 1.
PCNT2_S0IN	PD0	PE8						Pulse Counter PCNT2 input number 0.
PCNT2_S1IN	PD1	PE9						Pulse Counter PCNT2 input number 1.
PRS_CH0	PA0	PF3						Peripheral Reflex System PRS, channel 0.
PRS_CH1	PA1	PF4						Peripheral Reflex System PRS, channel 1.
PRS_CH2		PF5						Peripheral Reflex System PRS, channel 2.
PRS_CH3		PE8						Peripheral Reflex System PRS, channel 3.
TIM0_CC0	PA0	PA0		PD1	PA0	PF0		Timer 0 Capture Compare input / output channel 0.
TIM0_CC1	PA1	PA1		PD2		PF1		Timer 0 Capture Compare input / output channel 1.
TIM0_CC2	PA2	PA2		PD3		PF2		Timer 0 Capture Compare input / output channel 2.
TIM0_CDTI0	PA3	PC13	PF3	PC13		PF3		Timer 0 Complimentary Dead Time Insertion channel 0.
TIM0_CDTI1	PA4	PC14	PF4	PC14		PF4		Timer 0 Complimentary Dead Time Insertion channel 1.
TIM0_CDTI2	PA5	PC15	PF5	PC15	PC4	PF5		Timer 0 Complimentary Dead Time Insertion channel 2.
TIM1_CC0	PC13	PE10		PB7	PD6			Timer 1 Capture Compare input / output channel 0.
TIM1_CC1	PC14	PE11		PB8	PD7			Timer 1 Capture Compare input / output channel 1.
TIM1_CC2	PC15	PE12		PB11	PC13			Timer 1 Capture Compare input / output channel 2.
TIM2_CC0		PA12						Timer 2 Capture Compare input / output channel 0.
TIM2_CC1		PA13						Timer 2 Capture Compare input / output channel 1.
TIM2_CC2		PA14						Timer 2 Capture Compare input / output channel 2.
TIM3_CC0	PE14							Timer 3 Capture Compare input / output channel 0.

Alternate	LOCATION							
Functionality	0	1	2	3	4	5	6	Description
TIM3_CC1	PE15							Timer 3 Capture Compare input / output channel 1.
US0_CLK	PE12	PE5		PC15	PB13	PB13		USART0 clock input / output.
US0_CS	PE13	PE4		PC14	PB14	PB14		USART0 chip select input / output.
US0_RX	PE11	PE6		PE12	PB8			USART0 Asynchronous Receive. USART0 Synchronous mode Main Input / Secondary Output (MISO).
US0_TX	PE10	PE7		PE13	PB7			USART0 Asynchronous Transmit.Also used as receive input in half duplex communication. USART0 Synchronous mode Main Output / Secondary Input (MOSI).
US1_CLK	PB7	PD2	PF0					USART1 clock input / output.
US1_CS	PB8	PD3	PF1					USART1 chip select input / output.
US1_RX		PD1	PD6					USART1 Asynchronous Receive. USART1 Synchronous mode Main Input / Secondary Output (MISO).
US1_TX		PD0	PD7					USART1 Asynchronous Transmit.Also used as receive input in half duplex communication. USART1 Synchronous mode Main Output / Secondary Input (MOSI).
US2_CLK	PC4	PB5						USART2 clock input / output.
US2_CS	PC5	PB6						USART2 chip select input / output.
US2_RX		PB4						USART2 Asynchronous Receive. USART2 Synchronous mode Main Input / Secondary Output (MISO).
US2_TX		PB3						USART2 Asynchronous Transmit.Also used as receive input in half duplex communication. USART2 Synchronous mode Main Output / Secondary Input (MOSI).

5.13.3 GPIO Pinout Overview

The specific GPIO pins available in EFM32WG842 are shown in the following table. Each GPIO port is organized as 16-bit ports indicated by letters A through F, and the individual pin on this port is indicated by a number from 15 down to 0.

Table 5.39. GPIO Pinout

Port	Pin 15	Pin 14	Pin 13	Pin 12	Pin 11	Pin 10	Pin 9	Pin 8	Pin 7	Pin 6	Pin 5	Pin 4	Pin 3	Pin 2	Pin 1	Pin 0
Port A	—	PA14	PA13	PA12	—	—	—	—	—	—	PA5	PA4	PA3	PA2	PA1	PA0
Port B	—	PB14	PB13	—	PB11	—	—	PB8	PB7	PB6	PB5	PB4	PB3	—	—	—
Port C	PC15	PC14	PC13	PC12	—	—	—	—	PC7	PC6	PC5	PC4	—	—	—	—
Port D	—	—	—	—	—	—	—	PD8	PD7	PD6	PD5	PD4	PD3	PD2	PD1	PD0
Port E	PE15	PE14	PE13	PE12	PE11	PE10	PE9	PE8	PE7	PE6	PE5	PE4	—	—	—	—
Port F	—	—	—	—	—	—	—	—	—	—	PF5	PF4	PF3	PF2	PF1	PF0

5.13.4 Opamp Pinout Overview

The specific opamp terminals available in EFM32WG842 is shown in the following figure.

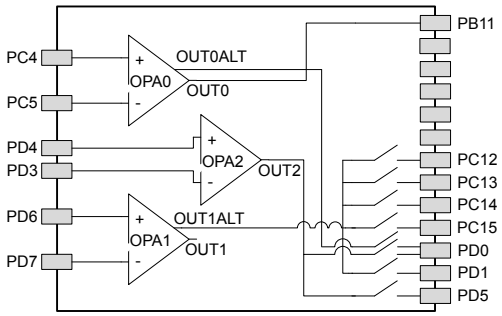

Figure 5.26. Opamp Pinout

5.14 EFM32WG880 (LQFP100)

5.14.1 Pinout

The EFM32WG880 pinout is shown in the following figure and table. Alternate locations are denoted by "#" followed by the location number (Multiple locations on the same pin are split with "/"). Alternate locations can be configured in the LOCATION bitfield in the *_ROUTE register in the module in question.

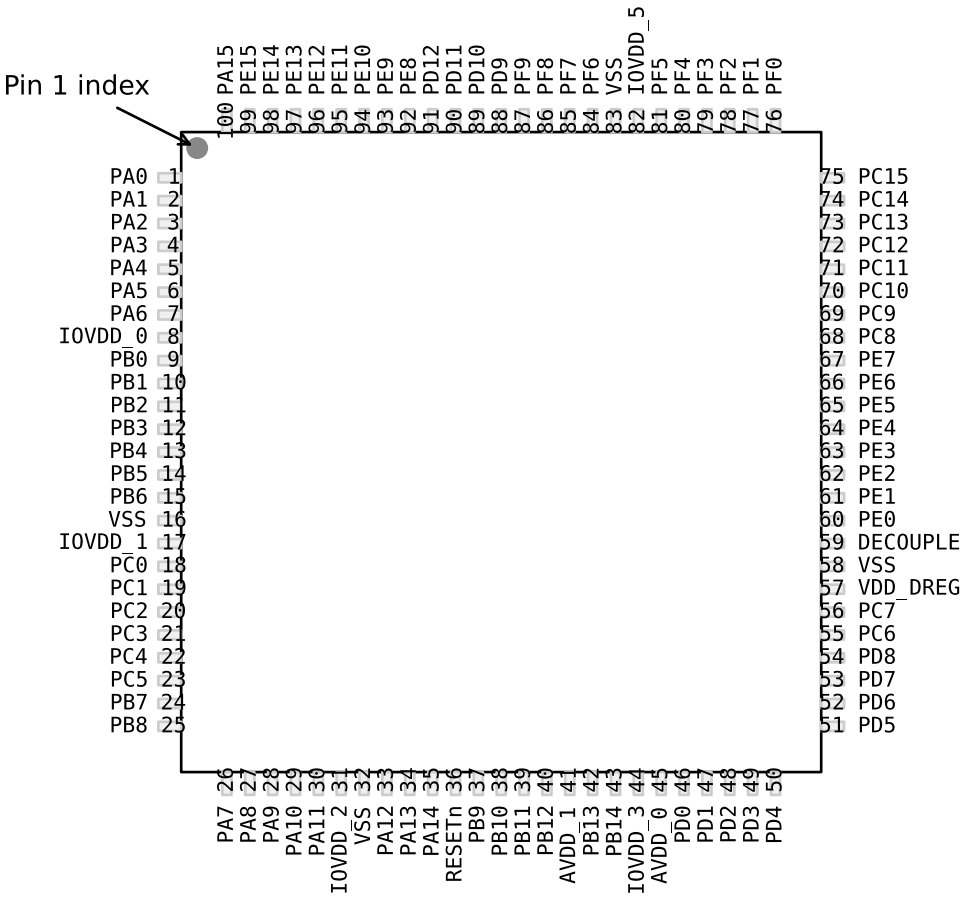

Figure 5.27. EFM32WG880 Pinout (top view, not to scale)

Table 5.40. Device Pinout

LQFP100 Pin# and Name		Pin Alternate Functionality / Description				
Pin #	Pin Name	Analog	EBI	Timers	Communication	Other
1	PA0	LCD_SEG13	EBI_AD09 #0/1/2	TIM0_CC0 #0/1/4	LEU0_RX #4 I2C0_SDA #0	PRS_CH0 #0 GPIO_EM4WU0
2	PA1	LCD_SEG14	EBI_AD10 #0/1/2	TIM0_CC1 #0/1	I2C0_SCL #0	CMU_CLK1 #0 PRS_CH1 #0
3	PA2	LCD_SEG15	EBI_AD11 #0/1/2	TIM0_CC2 #0/1		CMU_CLK0 #0 ETM_TD0 #3
4	PA3	LCD_SEG16	EBI_AD12 #0/1/2	TIM0_CDTI0 #0	U0_TX #2	LES_ALTEX2 #0 ETM_TD1 #3
5	PA4	LCD_SEG17	EBI_AD13 #0/1/2	TIM0_CDTI1 #0	U0_RX #2	LES_ALTEX3 #0 ETM_TD2 #3
6	PA5	LCD_SEG18	EBI_AD14 #0/1/2	TIM0_CDTI2 #0	LEU1_TX #1	LES_ALTEX4 #0 ETM_TD3 #3
7	PA6	LCD_SEG19	EBI_AD15 #0/1/2		LEU1_RX #1	ETM_TCLK #3 GPIO_EM4WU1
8	IOVDD_0	Digital IO power supply 0.				
9	PB0	LCD_SEG32	EBI_A16 #0/1/2	TIM1_CC0 #2		
10	PB1	LCD_SEG33	EBI_A17 #0/1/2	TIM1_CC1 #2		
11	PB2	LCD_SEG34	EBI_A18 #0/1/2	TIM1_CC2 #2		
12	PB3	LCD_SEG20/ LCD_COM4	EBI_A19 #0/1/2	PCNT1_S0IN #1	US2_TX #1	
13	PB4	LCD_SEG21/ LCD_COM5	EBI_A20 #0/1/2	PCNT1_S1IN #1	US2_RX #1	
14	PB5	LCD_SEG22/ LCD_COM6	EBI_A21 #0/1/2		US2_CLK #1	
15	PB6	LCD_SEG23/ LCD_COM7	EBI_A22 #0/1/2		US2_CS #1	
16	VSS	Ground.				
17	IOVDD_1	Digital IO power supply 1.				
18	PC0	ACMP0_CH0 DAC0_OUT0ALT #0/ OPAMP_OUT0ALT	EBI_A23 #0/1/2	TIM0_CC1 #4 PCNT0_S0IN #2	US0_TX #5 US1_TX #0 I2C0_SDA #4	LES_CH0 #0 PRS_CH2 #0
19	PC1	ACMP0_CH1 DAC0_OUT0ALT #1/ OPAMP_OUT0ALT	EBI_A24 #0/1/2	TIM0_CC2 #4 PCNT0_S1IN #2	US0_RX #5 US1_RX #0 I2C0_SCL #4	LES_CH1 #0 PRS_CH3 #0
20	PC2	ACMP0_CH2 DAC0_OUT0ALT #2/ OPAMP_OUT0ALT	EBI_A25 #0/1/2	TIM0_CDTI0 #4	US2_TX #0	LES_CH2 #0

LQFP100 Pin# and Name		Pin Alternate Functionality / Description				
Pin #	Pin Name	Analog	EBI	Timers	Communication	Other
21	PC3	ACMP0_CH3 DAC0_OUT0ALT #3/ OPAMP_OUT0ALT	EBI_NANDREn #0/1/2	TIM0_CDTI1 #4	US2_RX #0	LES_CH3 #0
22	PC4	ACMP0_CH4 / DAC0_P0 / OPAMP_P0	EBI_A26 #0/1/2	TIM0_CDTI2 #4 LE-TIM0_OUT0 #3 PCNT1_S0IN #0	US2_CLK #0 I2C1_SDA #0	LES_CH4 #0
23	PC5	ACMP0_CH5 / DAC0_N0 / OPAMP_N0	EBI_NANDWEn #0/1/2	LETIM0_OUT1 #3 PCNT1_S1IN #0	US2_CS #0 I2C1_SCL #0	LES_CH5 #0
24	PB7	LFXTAL_P		TIM1_CC0 #3	US0_TX #4 US1_CLK #0	
25	PB8	LFXTAL_N		TIM1_CC1 #3	US0_RX #4 US1_CS #0	
26	PA7	LCD_SEG35	EBI_CSTFT #0/1/2			
27	PA8	LCD_SEG36	EBI_DCLK #0/1/2	TIM2_CC0 #0		
28	PA9	LCD_SEG37	EBI_DTEN #0/1/2	TIM2_CC1 #0		
29	PA10	LCD_SEG38	EBI_VSNC #0/1/2	TIM2_CC2 #0		
30	PA11	LCD_SEG39	EBI_HSNC #0/1/2			
31	IOVDD_2	Digital IO power supply 2.				
32	VSS	Ground.				
33	PA12	LCD_BCAP_P	EBI_A00 #0/1/2	TIM2_CC0 #1		
34	PA13	LCD_BCAP_N	EBI_A01 #0/1/2	TIM2_CC1 #1		
35	PA14	LCD_BEXT	EBI_A02 #0/1/2	TIM2_CC2 #1		
36	RESETn	Reset input, active low. To apply an external reset source to this pin, it is required to only drive this pin low during reset, and let the internal pull-up ensure that reset is released.				
37	PB9		EBI_A03 #0/1/2		U1_TX #2	
38	PB10		EBI_A04 #0/1/2		U1_RX #2	
39	PB11	DAC0_OUT0 / OPAMP_OUT0		TIM1_CC2 #3 LE-TIM0_OUT0 #1	I2C1_SDA #1	
40	PB12	DAC0_OUT1 / OPAMP_OUT1		LETIM0_OUT1 #1	I2C1_SCL #1	
41	AVDD_1	Analog power supply 1.				
42	PB13	HFXTAL_P			US0_CLK #4/5 LEU0_TX #1	
43	PB14	HFXTAL_N			US0_CS #4/5 LEU0_RX #1	
44	IOVDD_3	Digital IO power supply 3.				
45	AVDD_0	Analog power supply 0.				

LQFP100 Pin# and Name		Pin Alternate Functionality / Description				
Pin #	Pin Name	Analog	EBI	Timers	Communication	Other
46	PD0	ADC0_CH0 DAC0_OUT0ALT #4/ OPAMP_OUT0ALT OPAMP_OUT2 #1		PCNT2_S0IN #0	US1_TX #1	
47	PD1	ADC0_CH1 DAC0_OUT1ALT #4/ OPAMP_OUT1ALT		TIM0_CC0 #3 PCNT2_S1IN #0	US1_RX #1	DBG_SWO #2
48	PD2	ADC0_CH2	EBI_A27 #0/1/2	TIM0_CC1 #3	US1_CLK #1	DBG_SWO #3
49	PD3	ADC0_CH3 OPAMP_N2		TIM0_CC2 #3	US1_CS #1	ETM_TD1 #0/2
50	PD4	ADC0_CH4 OPAMP_P2			LEU0_TX #0	ETM_TD2 #0/2
51	PD5	ADC0_CH5 OPAMP_OUT2 #0			LEU0_RX #0	ETM_TD3 #0/2
52	PD6	ADC0_CH6 / DAC0_P1 / OPAMP_P1		TIM1_CC0 #4 LE-TIM0_OUT0 #0 PCNT0_S0IN #3	US1_RX #2 I2C0_SDA #1	LES_ALTEX0 #0 ACMP0_O #2 ETM_TD0 #0
53	PD7	ADC0_CH7 / DAC0_N1 / OPAMP_N1		TIM1_CC1 #4 LE-TIM0_OUT1 #0 PCNT0_S1IN #3	US1_TX #2 I2C0_SCL #1	CMU_CLK0 #2 LES_ALTEX1 #0 ACMP1_O #2 ETM_TCLK #0
54	PD8	BU_VIN				CMU_CLK1 #1
55	PC6	ACMP0_CH6	EBI_A05 #0/1/2		LEU1_TX #0 I2C0_SDA #2	LES_CH6 #0 ETM_TCLK #2
56	PC7	ACMP0_CH7	EBI_A06 #0/1/2		LEU1_RX #0 I2C0_SCL #2	LES_CH7 #0 ETM_TD0 #2
57	VDD_DREG	Power supply for on-chip voltage regulator.				
58	VSS	Ground.				
59	DECOUPLE	Decouple output for on-chip voltage regulator. An external capacitance of size $C_{DECOUPLE}$ is required at this pin.				
60	PE0		EBI_A07 #0/1/2	TIM3_CC0 #1 PCNT0_S0IN #1	U0_TX #1 I2C1_SDA #2	
61	PE1		EBI_A08 #0/1/2	TIM3_CC1 #1 PCNT0_S1IN #1	U0_RX #1 I2C1_SCL #2	
62	PE2	BU_VOUT	EBI_A09 #0	TIM3_CC2 #1	U1_TX #3	ACMP0_O #1
63	PE3	BU_STAT	EBI_A10 #0		U1_RX #3	ACMP1_O #1
64	PE4	LCD_COM0	EBI_A11 #0/1/2		US0_CS #1	
65	PE5	LCD_COM1	EBI_A12 #0/1/2		US0_CLK #1	
66	PE6	LCD_COM2	EBI_A13 #0/1/2		US0_RX #1	
67	PE7	LCD_COM3	EBI_A14 #0/1/2		US0_TX #1	
68	PC8	ACMP1_CH0	EBI_A15 #0/1/2	TIM2_CC0 #2	US0_CS #2	LES_CH8 #0

LQFP100 Pin# and Name		Pin Alternate Functionality / Description				
Pin #	Pin Name	Analog	EBI	Timers	Communication	Other
69	PC9	ACMP1_CH1	EBI_A09 #1/2	TIM2_CC1 #2	US0_CLK #2	LES_CH9 #0 GPIO_EM4WU2
70	PC10	ACMP1_CH2	EBI_A10 #1/2	TIM2_CC2 #2	US0_RX #2	LES_CH10 #0
71	PC11	ACMP1_CH3	EBI_ALE #1/2		US0_TX #2	LES_CH11 #0
72	PC12	ACMP1_CH4 DAC0_OUT1ALT #0/ OPAMP_OUT1ALT			U1_TX #0	CMU_CLK0 #1 LES_CH12 #0
73	PC13	ACMP1_CH5 DAC0_OUT1ALT #1/ OPAMP_OUT1ALT		TIM0_CDTI0 #1/3 TIM1_CC0 #0 TIM1_CC2 #4 PCNT0_S0IN #0	U1_RX #0	LES_CH13 #0
74	PC14	ACMP1_CH6 DAC0_OUT1ALT #2/ OPAMP_OUT1ALT		TIM0_CDTI1 #1/3 TIM1_CC1 #0 PCNT0_S1IN #0	US0_CS #3 U0_TX #3	LES_CH14 #0
75	PC15	ACMP1_CH7 DAC0_OUT1ALT #3/ OPAMP_OUT1ALT		TIM0_CDTI2 #1/3 TIM1_CC2 #0	US0_CLK #3 U0_RX #3	LES_CH15 #0 DBG_SWO #1
76	PF0			TIM0_CC0 #5 LE-TIM0_OUT0 #2	US1_CLK #2 LEU0_TX #3 I2C0_SDA #5	DBG_SWCLK #0/1/2/3
77	PF1			TIM0_CC1 #5 LE-TIM0_OUT1 #2	US1_CS #2 LEU0_RX #3 I2C0_SCL #5	DBG_SWDIO #0/1/2/3 GPIO_EM4WU3
78	PF2	LCD_SEG0	EBI_ARDY #0/1/2	TIM0_CC2 #5	LEU0_TX #4	ACMP1_O #0 DBG_SWO #0 GPIO_EM4WU4
79	PF3	LCD_SEG1	EBI_ALE #0	TIM0_CDTI0 #2/5		PRS_CH0 #1 ETM_TD3 #1
80	PF4	LCD_SEG2	EBI_WEn #0/2	TIM0_CDTI1 #2/5		PRS_CH1 #1
81	PF5	LCD_SEG3	EBI_REn #0/2	TIM0_CDTI2 #2/5		PRS_CH2 #1
82	IOVDD_5	Digital IO power supply 5.				
83	VSS	Ground.				
84	PF6	LCD_SEG24	EBI_BL0 #0/1/2	TIM0_CC0 #2	U0_TX #0	
85	PF7	LCD_SEG25	EBI_BL1 #0/1/2	TIM0_CC1 #2	U0_RX #0	
86	PF8	LCD_SEG26	EBI_WEn #1	TIM0_CC2 #2		ETM_TCLK #1
87	PF9	LCD_SEG27	EBI_REn #1			ETM_TD0 #1
88	PD9	LCD_SEG28	EBI_CS0 #0/1/2			
89	PD10	LCD_SEG29	EBI_CS1 #0/1/2			
90	PD11	LCD_SEG30	EBI_CS2 #0/1/2			
91	PD12	LCD_SEG31	EBI_CS3 #0/1/2			
92	PE8	LCD_SEG4	EBI_AD00 #0/1/2	PCNT2_S0IN #1		PRS_CH3 #1

LQFP100 Pin# and Name		Pin Alternate Functionality / Description				
Pin #	Pin Name	Analog	EBI	Timers	Communication	Other
93	PE9	LCD_SEG5	EBI_AD01 #0/1/2	PCNT2_S1IN #1		
94	PE10	LCD_SEG6	EBI_AD02 #0/1/2	TIM1_CC0 #1	US0_TX #0	BOOT_TX
95	PE11	LCD_SEG7	EBI_AD03 #0/1/2	TIM1_CC1 #1	US0_RX #0	LES_ALTEX5 #0 BOOT_RX
96	PE12	LCD_SEG8	EBI_AD04 #0/1/2	TIM1_CC2 #1	US0_RX #3 US0_CLK #0 I2C0_SDA #6	CMU_CLK1 #2 LES_ALTEX6 #0
97	PE13	LCD_SEG9	EBI_AD05 #0/1/2		US0_TX #3 US0_CS #0 I2C0_SCL #6	LES_ALTEX7 #0 ACMP0_O #0 GPIO_EM4WU5
98	PE14	LCD_SEG10	EBI_AD06 #0/1/2	TIM3_CC0 #0	LEU0_TX #2	
99	PE15	LCD_SEG11	EBI_AD07 #0/1/2	TIM3_CC1 #0	LEU0_RX #2	
100	PA15	LCD_SEG12	EBI_AD08 #0/1/2	TIM3_CC2 #0		

5.14.2 Alternate Functionality Pinout

A wide selection of alternate functionality is available for multiplexing to various pins. This is shown in the following table. The table shows the name of the alternate functionality in the first column, followed by columns showing the possible LOCATION bitfield settings.

Note: Some functionality, such as analog interfaces, do not have alternate settings or a LOCATION bitfield. In these cases, the pinout is shown in the column corresponding to LOCATION 0.

Table 5.41. Alternate Functionality Overview

Alternate	LOCATION							
Functionality	0	1	2	3	4	5	6	Description
ACMP0_CH0	PC0							Analog comparator ACMP0, channel 0.
ACMP0_CH1	PC1							Analog comparator ACMP0, channel 1.
ACMP0_CH2	PC2							Analog comparator ACMP0, channel 2.
ACMP0_CH3	PC3							Analog comparator ACMP0, channel 3.
ACMP0_CH4	PC4							Analog comparator ACMP0, channel 4.
ACMP0_CH5	PC5							Analog comparator ACMP0, channel 5.
ACMP0_CH6	PC6							Analog comparator ACMP0, channel 6.
ACMP0_CH7	PC7							Analog comparator ACMP0, channel 7.
ACMP0_O	PE13	PE2	PD6					Analog comparator ACMP0, digital output.
ACMP1_CH0	PC8							Analog comparator ACMP1, channel 0.
ACMP1_CH1	PC9							Analog comparator ACMP1, channel 1.
ACMP1_CH2	PC10							Analog comparator ACMP1, channel 2.
ACMP1_CH3	PC11							Analog comparator ACMP1, channel 3.
ACMP1_CH4	PC12							Analog comparator ACMP1, channel 4.
ACMP1_CH5	PC13							Analog comparator ACMP1, channel 5.
ACMP1_CH6	PC14							Analog comparator ACMP1, channel 6.
ACMP1_CH7	PC15							Analog comparator ACMP1, channel 7.
ACMP1_O	PF2	PE3	PD7					Analog comparator ACMP1, digital output.
ADC0_CH0	PD0							Analog to digital converter ADC0, input channel number 0.
ADC0_CH1	PD1							Analog to digital converter ADC0, input channel number 1.
ADC0_CH2	PD2							Analog to digital converter ADC0, input channel number 2.
ADC0_CH3	PD3							Analog to digital converter ADC0, input channel number 3.
ADC0_CH4	PD4							Analog to digital converter ADC0, input channel number 4.
ADC0_CH5	PD5							Analog to digital converter ADC0, input channel number 5.
ADC0_CH6	PD6							Analog to digital converter ADC0, input channel number 6.

Alternate	LOCATION							
Functionality	0	1	2	3	4	5	6	Description
ADC0_CH7	PD7							Analog to digital converter ADC0, input channel number 7.
BOOT_RX	PE11							Bootloader RX.
BOOT_TX	PE10							Bootloader TX.
BU_STAT	PE3							Backup Power Domain status, whether or not the system is in backup mode
BU_VIN	PD8							Battery input for Backup Power Domain
BU_VOUT	PE2							Power output for Backup Power Domain
CMU_CLK0	PA2	PC12	PD7					Clock Management Unit, clock output number 0.
CMU_CLK1	PA1	PD8	PE12					Clock Management Unit, clock output number 1.
DAC0_OUT0 / OPAMP_OUT0	PB11							Digital to Analog Converter DAC0_OUT0 /OPAMP output channel number 0.
DAC0_OUT0ALT / OPAMP_OUT0ALT	PC0	PC1	PC2	PC3	PD0			Digital to Analog Converter DAC0_OUT0ALT / OPAMP alternative output for channel 0.
DAC0_OUT1 / OPAMP_OUT1	PB12							Digital to Analog Converter DAC0_OUT1 /OPAMP output channel number 1.
DAC0_OUT1ALT / OPAMP_OUT1ALT	PC12	PC13	PC14	PC15	PD1			Digital to Analog Converter DAC0_OUT1ALT / OPAMP alternative output for channel 1.
DBG_SWCLK	PF0	PF0	PF0	PF0				Debug-interface Serial Wire clock input. Note that this function is enabled to pin out of reset, and has a built-in pull down.
DBG_SWDIO	PF1	PF1	PF1	PF1				Debug-interface Serial Wire data input / output. Note that this function is enabled to pin out of reset, and has a built-in pull up.
DBG_SWO	PF2	PC15	PD1	PD2				Debug-interface Serial Wire viewer Output. Note that this function is not enabled after reset, and must be enabled by software to be used.
EBI_A00	PA12	PA12	PA12					External Bus Interface (EBI) address output pin 00.
EBI_A01	PA13	PA13	PA13					External Bus Interface (EBI) address output pin 01.
EBI_A02	PA14	PA14	PA14					External Bus Interface (EBI) address output pin 02.
EBI_A03	PB9	PB9	PB9					External Bus Interface (EBI) address output pin 03.
EBI_A04	PB10	PB10	PB10					External Bus Interface (EBI) address output pin 04.
EBI_A05	PC6	PC6	PC6					External Bus Interface (EBI) address output pin 05.
EBI_A06	PC7	PC7	PC7					External Bus Interface (EBI) address output pin 06.
EBI_A07	PE0	PE0	PE0					External Bus Interface (EBI) address output pin 07.
EBI_A08	PE1	PE1	PE1					External Bus Interface (EBI) address output pin 08.
EBI_A09	PE2	PC9	PC9					External Bus Interface (EBI) address output pin 09.
EBI_A10	PE3	PC10	PC10					External Bus Interface (EBI) address output pin 10.

Alternate	LOCATION							
Functionality	0	1	2	3	4	5	6	Description
EBI_A11	PE4	PE4	PE4					External Bus Interface (EBI) address output pin 11.
EBI_A12	PE5	PE5	PE5					External Bus Interface (EBI) address output pin 12.
EBI_A13	PE6	PE6	PE6					External Bus Interface (EBI) address output pin 13.
EBI_A14	PE7	PE7	PE7					External Bus Interface (EBI) address output pin 14.
EBI_A15	PC8	PC8	PC8					External Bus Interface (EBI) address output pin 15.
EBI_A16	PB0	PB0	PB0					External Bus Interface (EBI) address output pin 16.
EBI_A17	PB1	PB1	PB1					External Bus Interface (EBI) address output pin 17.
EBI_A18	PB2	PB2	PB2					External Bus Interface (EBI) address output pin 18.
EBI_A19	PB3	PB3	PB3					External Bus Interface (EBI) address output pin 19.
EBI_A20	PB4	PB4	PB4					External Bus Interface (EBI) address output pin 20.
EBI_A21	PB5	PB5	PB5					External Bus Interface (EBI) address output pin 21.
EBI_A22	PB6	PB6	PB6					External Bus Interface (EBI) address output pin 22.
EBI_A23	PC0	PC0	PC0					External Bus Interface (EBI) address output pin 23.
EBI_A24	PC1	PC1	PC1					External Bus Interface (EBI) address output pin 24.
EBI_A25	PC2	PC2	PC2					External Bus Interface (EBI) address output pin 25.
EBI_A26	PC4	PC4	PC4					External Bus Interface (EBI) address output pin 26.
EBI_A27	PD2	PD2	PD2					External Bus Interface (EBI) address output pin 27.
EBI_AD00	PE8	PE8	PE8					External Bus Interface (EBI) address and data input / output pin 00.
EBI_AD01	PE9	PE9	PE9					External Bus Interface (EBI) address and data input / output pin 01.
EBI_AD02	PE10	PE10	PE10					External Bus Interface (EBI) address and data input / output pin 02.
EBI_AD03	PE11	PE11	PE11					External Bus Interface (EBI) address and data input / output pin 03.
EBI_AD04	PE12	PE12	PE12					External Bus Interface (EBI) address and data input / output pin 04.
EBI_AD05	PE13	PE13	PE13					External Bus Interface (EBI) address and data input / output pin 05.
EBI_AD06	PE14	PE14	PE14					External Bus Interface (EBI) address and data input / output pin 06.
EBI_AD07	PE15	PE15	PE15					External Bus Interface (EBI) address and data input / output pin 07.
EBI_AD08	PA15	PA15	PA15					External Bus Interface (EBI) address and data input / output pin 08.
EBI_AD09	PA0	PA0	PA0					External Bus Interface (EBI) address and data input / output pin 09.
EBI_AD10	PA1	PA1	PA1					External Bus Interface (EBI) address and data input / output pin 10.
EBI_AD11	PA2	PA2	PA2					External Bus Interface (EBI) address and data input / output pin 11.

Alternate	LOCATION							
Functionality	0	1	2	3	4	5	6	Description
EBI_AD12	PA3	PA3	PA3					External Bus Interface (EBI) address and data input / output pin 12.
EBI_AD13	PA4	PA4	PA4					External Bus Interface (EBI) address and data input / output pin 13.
EBI_AD14	PA5	PA5	PA5					External Bus Interface (EBI) address and data input / output pin 14.
EBI_AD15	PA6	PA6	PA6					External Bus Interface (EBI) address and data input / output pin 15.
EBI_ALE	PF3	PC11	PC11					External Bus Interface (EBI) Address Latch Enable output.
EBI_ARDY	PF2	PF2	PF2					External Bus Interface (EBI) Hardware Ready Control input.
EBI_BL0	PF6	PF6	PF6					External Bus Interface (EBI) Byte Lane/Enable pin 0.
EBI_BL1	PF7	PF7	PF7					External Bus Interface (EBI) Byte Lane/Enable pin 1.
EBI_CS0	PD9	PD9	PD9					External Bus Interface (EBI) Chip Select output 0.
EBI_CS1	PD10	PD10	PD10					External Bus Interface (EBI) Chip Select output 1.
EBI_CS2	PD11	PD11	PD11					External Bus Interface (EBI) Chip Select output 2.
EBI_CS3	PD12	PD12	PD12					External Bus Interface (EBI) Chip Select output 3.
EBI_CSTFT	PA7	PA7	PA7					External Bus Interface (EBI) Chip Select output TFT.
EBI_DCLK	PA8	PA8	PA8					External Bus Interface (EBI) TFT Dot Clock pin.
EBI_DTEN	PA9	PA9	PA9					External Bus Interface (EBI) TFT Data Enable pin.
EBI_HSNC	PA11	PA11	PA11					External Bus Interface (EBI) TFT Horizontal Synchronization pin.
EBI_NANDREn	PC3	PC3	PC3					External Bus Interface (EBI) NAND Read Enable output.
EBI_NANDWEn	PC5	PC5	PC5					External Bus Interface (EBI) NAND Write Enable output.
EBI_REn	PF5	PF9	PF5					External Bus Interface (EBI) Read Enable output.
EBI_VSNC	PA10	PA10	PA10					External Bus Interface (EBI) TFT Vertical Synchronization pin.
EBI_WEn	PF4	PF8	PF4					External Bus Interface (EBI) Write Enable output.
ETM_TCLK	PD7	PF8	PC6	PA6				Embedded Trace Module ETM clock .
ETM_TD0	PD6	PF9	PC7	PA2				Embedded Trace Module ETM data 0.
ETM_TD1	PD3		PD3	PA3				Embedded Trace Module ETM data 1.
ETM_TD2	PD4		PD4	PA4				Embedded Trace Module ETM data 2.
ETM_TD3	PD5	PF3	PD5	PA5				Embedded Trace Module ETM data 3.
GPIO_EM4WU0	PA0							Pin can be used to wake the system up from EM4
GPIO_EM4WU1	PA6							Pin can be used to wake the system up from EM4

Alternate	LOCATION							
Functionality	0	1	2	3	4	5	6	Description
GPIO_EM4WU2	PC9							Pin can be used to wake the system up from EM4
GPIO_EM4WU3	PF1							Pin can be used to wake the system up from EM4
GPIO_EM4WU4	PF2							Pin can be used to wake the system up from EM4
GPIO_EM4WU5	PE13							Pin can be used to wake the system up from EM4
HFXTAL_N	PB14							High Frequency Crystal negative pin. Also used as external optional clock input pin.
HFXTAL_P	PB13							High Frequency Crystal positive pin.
I2C0_SCL	PA1	PD7	PC7		PC1	PF1	PE13	I2C0 Serial Clock Line input / output.
I2C0_SDA	PA0	PD6	PC6		PC0	PF0	PE12	I2C0 Serial Data input / output.
I2C1_SCL	PC5	PB12	PE1					I2C1 Serial Clock Line input / output.
I2C1_SDA	PC4	PB11	PE0					I2C1 Serial Data input / output.
LCD_BCAP_N	PA13							LCD voltage booster (optional), boost capacitor, negative pin. If using the LCD voltage booster, connect a 22 nF capacitor between LCD_BCAP_N and LCD_BCAP_P.
LCD_BCAP_P	PA12							LCD voltage booster (optional), boost capacitor, positive pin. If using the LCD voltage booster, connect a 22 nF capacitor between LCD_BCAP_N and LCD_BCAP_P.
LCD_BEXT	PA14							LCD voltage booster (optional), boost output. If using the LCD voltage booster, connect a 1 uF capacitor between this pin and VSS. An external LCD voltage may also be applied to this pin if the booster is not enabled. If AVDD is used directly as the LCD supply voltage, this pin may be left unconnected or used as a GPIO.
LCD_COM0	PE4							LCD driver common line number 0.
LCD_COM1	PE5							LCD driver common line number 1.
LCD_COM2	PE6							LCD driver common line number 2.
LCD_COM3	PE7							LCD driver common line number 3.
LCD_SEG0	PF2							LCD segment line 0. Segments 0, 1, 2 and 3 are controlled by SEGEN0.
LCD_SEG1	PF3							LCD segment line 0. Segments 0, 1, 2 and 3 are controlled by SEGEN0.
LCD_SEG2	PF4							LCD segment line 0. Segments 0, 1, 2 and 3 are controlled by SEGEN0.
LCD_SEG3	PF5							LCD segment line 3. Segments 0, 1, 2 and 3 are controlled by SEGEN0.
LCD_SEG4	PE8							LCD segment line 4. Segments 4, 5, 6 and 7 are controlled by SEGEN1.
LCD_SEG5	PE9							LCD segment line 5. Segments 4, 5, 6 and 7 are controlled by SEGEN1.

Alternate	LOCATION							
Functionality	0	1	2	3	4	5	6	Description
LCD_SEG6	PE10							LCD segment line 6. Segments 4, 5, 6 and 7 are controlled by SEGEN1.
LCD_SEG7	PE11							LCD segment line 7. Segments 4, 5, 6 and 7 are controlled by SEGEN1.
LCD_SEG8	PE12							LCD segment line 8. Segments 8, 9, 10 and 11 are controlled by SEGEN2.
LCD_SEG9	PE13							LCD segment line 9. Segments 8, 9, 10 and 11 are controlled by SEGEN2.
LCD_SEG10	PE14							LCD segment line 10. Segments 8, 9, 10 and 11 are controlled by SEGEN2.
LCD_SEG11	PE15							LCD segment line 11. Segments 8, 9, 10 and 11 are controlled by SEGEN2.
LCD_SEG12	PA15							LCD segment line 12. Segments 12, 13, 14 and 15 are controlled by SEGEN3.
LCD_SEG13	PA0							LCD segment line 13. Segments 12, 13, 14 and 15 are controlled by SEGEN3.
LCD_SEG14	PA1							LCD segment line 14. Segments 12, 13, 14 and 15 are controlled by SEGEN3.
LCD_SEG15	PA2							LCD segment line 15. Segments 12, 13, 14 and 15 are controlled by SEGEN3.
LCD_SEG16	PA3							LCD segment line 16. Segments 16, 17, 18 and 19 are controlled by SEGEN4.
LCD_SEG17	PA4							LCD segment line 17. Segments 16, 17, 18 and 19 are controlled by SEGEN4.
LCD_SEG18	PA5							LCD segment line 18. Segments 16, 17, 18 and 19 are controlled by SEGEN4.
LCD_SEG19	PA6							LCD segment line 19. Segments 16, 17, 18 and 19 are controlled by SEGEN4.
LCD_SEG20/ LCD_COM4	PB3							LCD segment line 20. Segments 20, 21, 22 and 23 are controlled by SEGEN5. This pin may also be used as LCD COM line 4
LCD_SEG21/ LCD_COM5	PB4							LCD segment line 21. Segments 20, 21, 22 and 23 are controlled by SEGEN5. This pin may also be used as LCD COM line 5
LCD_SEG22/ LCD_COM6	PB5							LCD segment line 22. Segments 20, 21, 22 and 23 are controlled by SEGEN5. This pin may also be used as LCD COM line 6
LCD_SEG23/ LCD_COM7	PB6							LCD segment line 23. Segments 20, 21, 22 and 23 are controlled by SEGEN5. This pin may also be used as LCD COM line 7
LCD_SEG24	PF6							LCD segment line 24. Segments 24, 25, 26 and 27 are controlled by SEGEN6.
LCD_SEG25	PF7							LCD segment line 25. Segments 24, 25, 26 and 27 are controlled by SEGEN6.
LCD_SEG26	PF8							LCD segment line 26. Segments 24, 25, 26 and 27 are controlled by SEGEN6.

Alternate	LOCATION							
Functionality	0	1	2	3	4	5	6	Description
LCD_SEG27	PF9							LCD segment line 27. Segments 24, 25, 26 and 27 are controlled by SEGEN6.
LCD_SEG28	PD9							LCD segment line 28. Segments 28, 29, 30 and 31 are controlled by SEGEN7.
LCD_SEG29	PD10							LCD segment line 29. Segments 28, 29, 30 and 31 are controlled by SEGEN7.
LCD_SEG30	PD11							LCD segment line 30. Segments 28, 29, 30 and 31 are controlled by SEGEN7.
LCD_SEG31	PD12							LCD segment line 31. Segments 28, 29, 30 and 31 are controlled by SEGEN7.
LCD_SEG32	PB0							LCD segment line 32. Segments 32, 33, 34 and 35 are controlled by SEGEN8.
LCD_SEG33	PB1							LCD segment line 33. Segments 32, 33, 34 and 35 are controlled by SEGEN8.
LCD_SEG34	PB2							LCD segment line 34. Segments 32, 33, 34 and 35 are controlled by SEGEN8.
LCD_SEG35	PA7							LCD segment line 35. Segments 32, 33, 34 and 35 are controlled by SEGEN8.
LCD_SEG36	PA8							LCD segment line 36. Segments 36, 37, 38 and 39 are controlled by SEGEN9.
LCD_SEG37	PA9							LCD segment line 37. Segments 36, 37, 38 and 39 are controlled by SEGEN9.
LCD_SEG38	PA10							LCD segment line 38. Segments 36, 37, 38 and 39 are controlled by SEGEN9.
LCD_SEG39	PA11							LCD segment line 39. Segments 36, 37, 38 and 39 are controlled by SEGEN9.
LES_ALTEX0	PD6							LESENSE alternate exite output 0.
LES_ALTEX1	PD7							LESENSE alternate exite output 1.
LES_ALTEX2	PA3							LESENSE alternate exite output 2.
LES_ALTEX3	PA4							LESENSE alternate exite output 3.
LES_ALTEX4	PA5							LESENSE alternate exite output 4.
LES_ALTEX5	PE11							LESENSE alternate exite output 5.
LES_ALTEX6	PE12							LESENSE alternate exite output 6.
LES_ALTEX7	PE13							LESENSE alternate exite output 7.
LES_CH0	PC0							LESENSE channel 0.
LES_CH1	PC1							LESENSE channel 1.
LES_CH2	PC2							LESENSE channel 2.
LES_CH3	PC3							LESENSE channel 3.
LES_CH4	PC4							LESENSE channel 4.
LES_CH5	PC5							LESENSE channel 5.
LES_CH6	PC6							LESENSE channel 6.

Alternate	LOCATION							
Functionality	0	1	2	3	4	5	6	Description
LES_CH7	PC7							LESENSE channel 7.
LES_CH8	PC8							LESENSE channel 8.
LES_CH9	PC9							LESENSE channel 9.
LES_CH10	PC10							LESENSE channel 10.
LES_CH11	PC11							LESENSE channel 11.
LES_CH12	PC12							LESENSE channel 12.
LES_CH13	PC13							LESENSE channel 13.
LES_CH14	PC14							LESENSE channel 14.
LES_CH15	PC15							LESENSE channel 15.
LETIM0_OUT0	PD6	PB11	PF0	PC4				Low Energy Timer LETIM0, output channel 0.
LETIM0_OUT1	PD7	PB12	PF1	PC5				Low Energy Timer LETIM0, output channel 1.
LEU0_RX	PD5	PB14	PE15	PF1	PA0			LEUART0 Receive input.
LEU0_TX	PD4	PB13	PE14	PF0	PF2			LEUART0 Transmit output. Also used as receive input in half duplex communication.
LEU1_RX	PC7	PA6						LEUART1 Receive input.
LEU1_TX	PC6	PA5						LEUART1 Transmit output. Also used as receive input in half duplex communication.
LFXTAL_N	PB8							Low Frequency Crystal (typically 32.768 kHz) negative pin. Also used as an optional external clock input pin.
LFXTAL_P	PB7							Low Frequency Crystal (typically 32.768 kHz) positive pin.
OPAMP_N0 / DAC0_N0	PC5							Operational Amplifier 0 external negative input.
OPAMP_N1 / DAC0_N1	PD7							Operational Amplifier 1 external negative input.
OPAMP_N2	PD3							Operational Amplifier 2 external negative input.
OPAMP_OUT2	PD5	PD0						Operational Amplifier 2 output.
OPAMP_P0 / DAC0_P0	PC4							Operational Amplifier 0 external positive input.
OPAMP_P1 / DAC0_P1	PD6							Operational Amplifier 1 external positive input.
OPAMP_P2	PD4							Operational Amplifier 2 external positive input.
PCNT0_S0IN	PC13	PE0	PC0	PD6				Pulse Counter PCNT0 input number 0.
PCNT0_S1IN	PC14	PE1	PC1	PD7				Pulse Counter PCNT0 input number 1.
PCNT1_S0IN	PC4	PB3						Pulse Counter PCNT1 input number 0.
PCNT1_S1IN	PC5	PB4						Pulse Counter PCNT1 input number 1.
PCNT2_S0IN	PD0	PE8						Pulse Counter PCNT2 input number 0.
PCNT2_S1IN	PD1	PE9						Pulse Counter PCNT2 input number 1.
PRS_CH0	PA0	PF3						Peripheral Reflex System PRS, channel 0.

Alternate	LOCATION							
Functionality	0	1	2	3	4	5	6	Description
PRS_CH1	PA1	PF4						Peripheral Reflex System PRS, channel 1.
PRS_CH2	PC0	PF5						Peripheral Reflex System PRS, channel 2.
PRS_CH3	PC1	PE8						Peripheral Reflex System PRS, channel 3.
TIM0_CC0	PA0	PA0	PF6	PD1	PA0	PF0		Timer 0 Capture Compare input / output channel 0.
TIM0_CC1	PA1	PA1	PF7	PD2	PC0	PF1		Timer 0 Capture Compare input / output channel 1.
TIM0_CC2	PA2	PA2	PF8	PD3	PC1	PF2		Timer 0 Capture Compare input / output channel 2.
TIM0_CDTI0	PA3	PC13	PF3	PC13	PC2	PF3		Timer 0 Complimentary Dead Time Insertion channel 0.
TIM0_CDTI1	PA4	PC14	PF4	PC14	PC3	PF4		Timer 0 Complimentary Dead Time Insertion channel 1.
TIM0_CDTI2	PA5	PC15	PF5	PC15	PC4	PF5		Timer 0 Complimentary Dead Time Insertion channel 2.
TIM1_CC0	PC13	PE10	PB0	PB7	PD6			Timer 1 Capture Compare input / output channel 0.
TIM1_CC1	PC14	PE11	PB1	PB8	PD7			Timer 1 Capture Compare input / output channel 1.
TIM1_CC2	PC15	PE12	PB2	PB11	PC13			Timer 1 Capture Compare input / output channel 2.
TIM2_CC0	PA8	PA12	PC8					Timer 2 Capture Compare input / output channel 0.
TIM2_CC1	PA9	PA13	PC9					Timer 2 Capture Compare input / output channel 1.
TIM2_CC2	PA10	PA14	PC10					Timer 2 Capture Compare input / output channel 2.
TIM3_CC0	PE14	PE0						Timer 3 Capture Compare input / output channel 0.
TIM3_CC1	PE15	PE1						Timer 3 Capture Compare input / output channel 1.
TIM3_CC2	PA15	PE2						Timer 3 Capture Compare input / output channel 2.
U0_RX	PF7	PE1	PA4	PC15				UART0 Receive input.
U0_TX	PF6	PE0	PA3	PC14				UART0 Transmit output. Also used as receive input in half duplex communication.
U1_RX	PC13		PB10	PE3				UART1 Receive input.
U1_TX	PC12		PB9	PE2				UART1 Transmit output. Also used as receive input in half duplex communication.
US0_CLK	PE12	PE5	PC9	PC15	PB13	PB13		USART0 clock input / output.
US0_CS	PE13	PE4	PC8	PC14	PB14	PB14		USART0 chip select input / output.
US0_RX	PE11	PE6	PC10	PE12	PB8	PC1		USART0 Asynchronous Receive. USART0 Synchronous mode Main Input / Secondary Output (MISO).
US0_TX	PE10	PE7	PC11	PE13	PB7	PC0		USART0 Asynchronous Transmit.Also used as receive input in half duplex communication. USART0 Synchronous mode Main Output / Secondary Input (MOSI).
US1_CLK	PB7	PD2	PF0					USART1 clock input / output.
US1_CS	PB8	PD3	PF1					USART1 chip select input / output.

Alternate	LOCATION							
Functionality	0	1	2	3	4	5	6	Description
US1_RX	PC1	PD1	PD6					USART1 Asynchronous Receive. USART1 Synchronous mode Main Input / Secondary Output (MISO).
US1_TX	PC0	PD0	PD7					USART1 Asynchronous Transmit.Also used as receive input in half duplex communication. USART1 Synchronous mode Main Output / Secondary Input (MOSI).
US2_CLK	PC4	PB5						USART2 clock input / output.
US2_CS	PC5	PB6						USART2 chip select input / output.
US2_RX	PC3	PB4						USART2 Asynchronous Receive. USART2 Synchronous mode Main Input / Secondary Output (MISO).
US2_TX	PC2	PB3						USART2 Asynchronous Transmit.Also used as receive input in half duplex communication. USART2 Synchronous mode Main Output / Secondary Input (MOSI).

5.14.3 GPIO Pinout Overview

The specific GPIO pins available in EFM32WG880 are shown in the following table. Each GPIO port is organized as 16-bit ports indicated by letters A through F, and the individual pin on this port is indicated by a number from 15 down to 0.

Table 5.42. GPIO Pinout

Port	Pin 15	Pin 14	Pin 13	Pin 12	Pin 11	Pin 10	Pin 9	Pin 8	Pin 7	Pin 6	Pin 5	Pin 4	Pin 3	Pin 2	Pin 1	Pin 0
Port A	PA15	PA14	PA13	PA12	PA11	PA10	PA9	PA8	PA7	PA6	PA5	PA4	PA3	PA2	PA1	PA0
Port B	—	PB14	PB13	PB12	PB11	PB10	PB9	PB8	PB7	PB6	PB5	PB4	PB3	PB2	PB1	PB0
Port C	PC15	PC14	PC13	PC12	PC11	PC10	PC9	PC8	PC7	PC6	PC5	PC4	PC3	PC2	PC1	PC0
Port D	—	—	—	PD12	PD11	PD10	PD9	PD8	PD7	PD6	PD5	PD4	PD3	PD2	PD1	PD0
Port E	PE15	PE14	PE13	PE12	PE11	PE10	PE9	PE8	PE7	PE6	PE5	PE4	PE3	PE2	PE1	PE0
Port F	—	—	—	—	—	—	PF9	PF8	PF7	PF6	PF5	PF4	PF3	PF2	PF1	PF0

5.14.4 Opamp Pinout Overview

The specific opamp terminals available in EFM32WG880 is shown in the following figure.

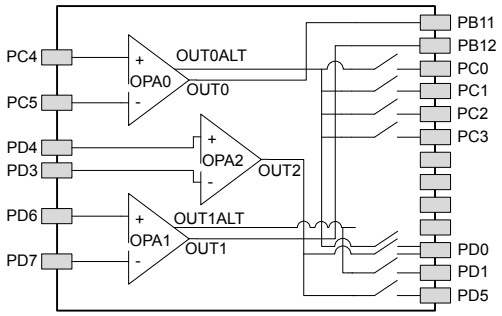

Figure 5.28. Opamp Pinout

5.15 EFM32WG890 (BGA112)

5.15.1 Pinout

The EFM32WG890 pinout is shown in the following figure and table. Alternate locations are denoted by "#" followed by the location number (Multiple locations on the same pin are split with "/"). Alternate locations can be configured in the LOCATION bitfield in the *_ROUTE register in the module in question.

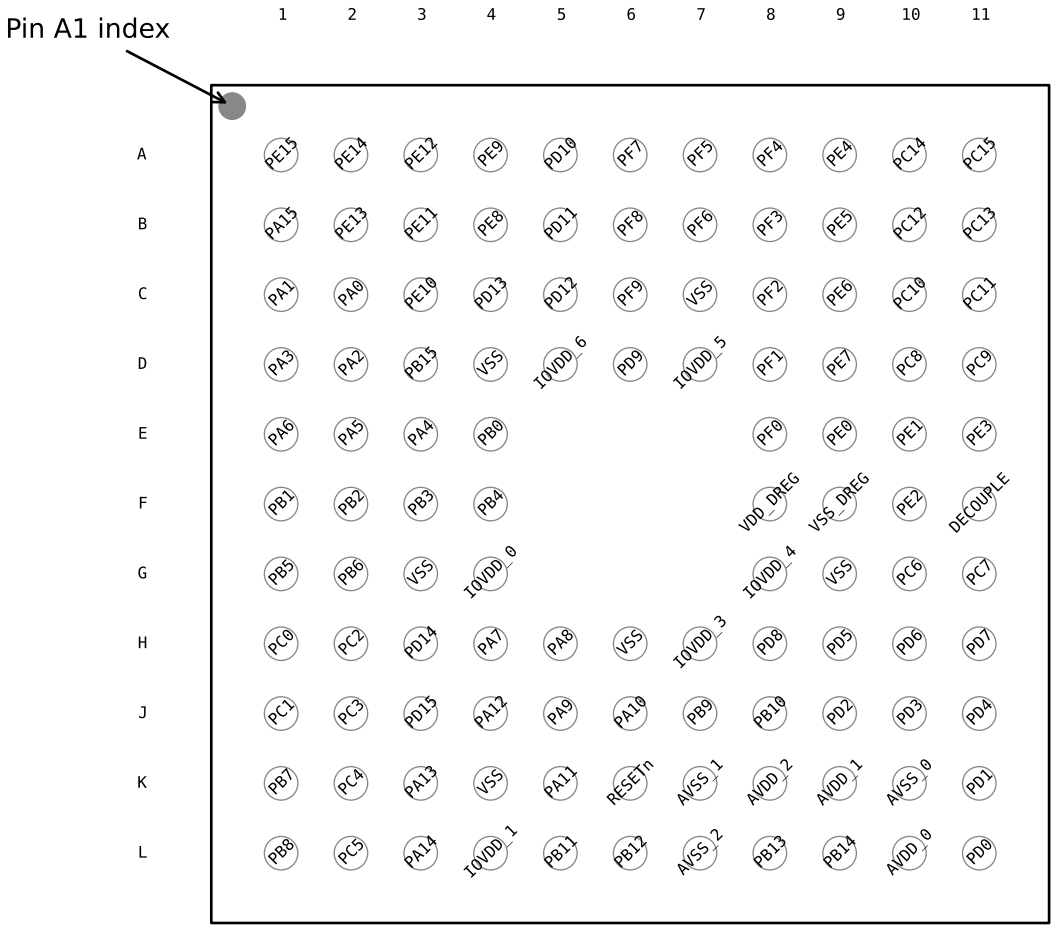

Figure 5.29. EFM32WG890 Pinout (top view, not to scale)

Table 5.43. Device Pinout

BGA112 Pin# and Name		Pin Alternate Functionality / Description				
Pin #	Pin Name	Analog	EBI	Timers	Communication	Other
A1	PE15	LCD_SEG11	EBI_AD07 #0/1/2	TIM3_CC1 #0	LEU0_RX #2	
A2	PE14	LCD_SEG10	EBI_AD06 #0/1/2	TIM3_CC0 #0	LEU0_TX #2	
A3	PE12	LCD_SEG8	EBI_AD04 #0/1/2	TIM1_CC2 #1	US0_RX #3 US0_CLK #0 I2C0_SDA #6	CMU_CLK1 #2 LES_ALTEX6 #0
A4	PE9	LCD_SEG5	EBI_AD01 #0/1/2	PCNT2_S1IN #1		
A5	PD10	LCD_SEG29	EBI_CS1 #0/1/2			
A6	PF7	LCD_SEG25	EBI_BL1 #0/1/2	TIM0_CC1 #2	U0_RX #0	
A7	PF5	LCD_SEG3	EBI_REn #0/2	TIM0_CDTI2 #2/5		PRS_CH2 #1
A8	PF4	LCD_SEG2	EBI_WEn #0/2	TIM0_CDTI1 #2/5		PRS_CH1 #1
A9	PE4	LCD_COM0	EBI_A11 #0/1/2		US0_CS #1	
A10	PC14	ACMP1_CH6 DAC0_OUT1ALT #2/ OPAMP_OUT1ALT		TIM0_CDTI1 #1/3 TIM1_CC1 #0 PCNT0_S1IN #0	US0_CS #3 U0_TX #3	LES_CH14 #0
A11	PC15	ACMP1_CH7 DAC0_OUT1ALT #3/ OPAMP_OUT1ALT		TIM0_CDTI2 #1/3 TIM1_CC2 #0	US0_CLK #3 U0_RX #3	LES_CH15 #0 DBG_SWO #1
B1	PA15	LCD_SEG12	EBI_AD08 #0/1/2	TIM3_CC2 #0		
B2	PE13	LCD_SEG9	EBI_AD05 #0/1/2		US0_TX #3 US0_CS #0 I2C0_SCL #6	LES_ALTEX7 #0 ACMP0_O #0 GPIO_EM4WU5
B3	PE11	LCD_SEG7	EBI_AD03 #0/1/2	TIM1_CC1 #1	US0_RX #0	LES_ALTEX5 #0 BOOT_RX
B4	PE8	LCD_SEG4	EBI_AD00 #0/1/2	PCNT2_S0IN #1		PRS_CH3 #1
B5	PD11	LCD_SEG30	EBI_CS2 #0/1/2			
B6	PF8	LCD_SEG26	EBI_WEn #1	TIM0_CC2 #2		ETM_TCLK #1
B7	PF6	LCD_SEG24	EBI_BL0 #0/1/2	TIM0_CC0 #2	U0_TX #0	
B8	PF3	LCD_SEG1	EBI_ALE #0	TIM0_CDTI0 #2/5		PRS_CH0 #1 ETM_TD3 #1
B9	PE5	LCD_COM1	EBI_A12 #0/1/2		US0_CLK #1	
B10	PC12	ACMP1_CH4 DAC0_OUT1ALT #0/ OPAMP_OUT1ALT			U1_TX #0	CMU_CLK0 #1 LES_CH12 #0
B11	PC13	ACMP1_CH5 DAC0_OUT1ALT #1/ OPAMP_OUT1ALT		TIM0_CDTI0 #1/3 TIM1_CC0 #0 TIM1_CC2 #4 PCNT0_S0IN #0	U1_RX #0	LES_CH13 #0

BGA112 Pin# and Name		Pin Alternate Functionality / Description				
Pin #	Pin Name	Analog	EBI	Timers	Communication	Other
C1	PA1	LCD_SEG14	EBI_AD10 #0/1/2	TIM0_CC1 #0/1	I2C0_SCL #0	CMU_CLK1 #0 PRS_CH1 #0
C2	PA0	LCD_SEG13	EBI_AD09 #0/1/2	TIM0_CC0 #0/1/4	LEU0_RX #4 I2C0_SDA #0	PRS_CH0 #0 GPIO_EM4WU0
C3	PE10	LCD_SEG6	EBI_AD02 #0/1/2	TIM1_CC0 #1	US0_TX #0	BOOT_TX
C4	PD13					ETM_TD1 #1
C5	PD12	LCD_SEG31	EBI_CS3 #0/1/2			
C6	PF9	LCD_SEG27	EBI_REn #1			ETM_TD0 #1
C7	VSS	Ground.				
C8	PF2	LCD_SEG0	EBI_ARDY #0/1/2	TIM0_CC2 #5	LEU0_TX #4	ACMP1_O #0 DBG_SWO #0 GPIO_EM4WU4
C9	PE6	LCD_COM2	EBI_A13 #0/1/2		US0_RX #1	
C10	PC10	ACMP1_CH2	EBI_A10 #1/2	TIM2_CC2 #2	US0_RX #2	LES_CH10 #0
C11	PC11	ACMP1_CH3	EBI_ALE #1/2		US0_TX #2	LES_CH11 #0
D1	PA3	LCD_SEG16	EBI_AD12 #0/1/2	TIM0_CDTI0 #0	U0_TX #2	LES_ALTEX2 #0 ETM_TD1 #3
D2	PA2	LCD_SEG15	EBI_AD11 #0/1/2	TIM0_CC2 #0/1		CMU_CLK0 #0 ETM_TD0 #3
D3	PB15					ETM_TD2 #1
D4	VSS	Ground.				
D5	IOVDD_6	Digital IO power supply 6.				
D6	PD9	LCD_SEG28	EBI_CS0 #0/1/2			
D7	IOVDD_5	Digital IO power supply 5.				
D8	PF1			TIM0_CC1 #5 LE-TIM0_OUT1 #2	US1_CS #2 LEU0_RX #3 I2C0_SCL #5	DBG_SWDIO #0/1/2/3 GPIO_EM4WU3
D9	PE7	LCD_COM3	EBI_A14 #0/1/2		US0_TX #1	
D10	PC8	ACMP1_CH0	EBI_A15 #0/1/2	TIM2_CC0 #2	US0_CS #2	LES_CH8 #0
D11	PC9	ACMP1_CH1	EBI_A09 #1/2	TIM2_CC1 #2	US0_CLK #2	LES_CH9 #0 GPIO_EM4WU2
E1	PA6	LCD_SEG19	EBI_AD15 #0/1/2		LEU1_RX #1	ETM_TCLK #3 GPIO_EM4WU1
E2	PA5	LCD_SEG18	EBI_AD14 #0/1/2	TIM0_CDTI2 #0	LEU1_TX #1	LES_ALTEX4 #0 ETM_TD3 #3
E3	PA4	LCD_SEG17	EBI_AD13 #0/1/2	TIM0_CDTI1 #0	U0_RX #2	LES_ALTEX3 #0 ETM_TD2 #3
E4	PB0	LCD_SEG32	EBI_A16 #0/1/2	TIM1_CC0 #2		
E8	PF0			TIM0_CC0 #5 LE-TIM0_OUT0 #2	US1_CLK #2 LEU0_TX #3 I2C0_SDA #5	DBG_SWCLK #0/1/2/3

BGA112 Pin# and Name		Pin Alternate Functionality / Description				
Pin #	Pin Name	Analog	EBI	Timers	Communication	Other
E9	PE0		EBI_A07 #0/1/2	TIM3_CC0 #1 PCNT0_S0IN #1	U0_TX #1 I2C1_SDA #2	
E10	PE1		EBI_A08 #0/1/2	TIM3_CC1 #1 PCNT0_S1IN #1	U0_RX #1 I2C1_SCL #2	
E11	PE3	BU_STAT	EBI_A10 #0		U1_RX #3	ACMP1_O #1
F1	PB1	LCD_SEG33	EBI_A17 #0/1/2	TIM1_CC1 #2		
F2	PB2	LCD_SEG34	EBI_A18 #0/1/2	TIM1_CC2 #2		
F3	PB3	LCD_SEG20/ LCD_COM4	EBI_A19 #0/1/2	PCNT1_S0IN #1	US2_TX #1	
F4	PB4	LCD_SEG21/ LCD_COM5	EBI_A20 #0/1/2	PCNT1_S1IN #1	US2_RX #1	
F8	VDD_DREG	Power supply for on-chip voltage regulator.				
F9	VSS_DREG	Ground for on-chip voltage regulator.				
F10	PE2	BU_VOUT	EBI_A09 #0	TIM3_CC2 #1	U1_TX #3	ACMP0_O #1
F11	DECOUPLE	Decouple output for on-chip voltage regulator. An external capacitance of size $C_{DECOUPLE}$ is required at this pin.				
G1	PB5	LCD_SEG22/ LCD_COM6	EBI_A21 #0/1/2		US2_CLK #1	
G2	PB6	LCD_SEG23/ LCD_COM7	EBI_A22 #0/1/2		US2_CS #1	
G3	VSS	Ground.				
G4	IOVDD_0	Digital IO power supply 0.				
G8	IOVDD_4	Digital IO power supply 4.				
G9	VSS	Ground.				
G10	PC6	ACMP0_CH6	EBI_A05 #0/1/2		LEU1_TX #0 I2C0_SDA #2	LES_CH6 #0 ETM_TCLK #2
G11	PC7	ACMP0_CH7	EBI_A06 #0/1/2		LEU1_RX #0 I2C0_SCL #2	LES_CH7 #0 ETM_TD0 #2
H1	PC0	ACMP0_CH0 DAC0_OUT0ALT #0/ OPAMP_OUT0ALT	EBI_A23 #0/1/2	TIM0_CC1 #4 PCNT0_S0IN #2	US0_TX #5 US1_TX #0 I2C0_SDA #4	LES_CH0 #0 PRS_CH2 #0
H2	PC2	ACMP0_CH2 DAC0_OUT0ALT #2/ OPAMP_OUT0ALT	EBI_A25 #0/1/2	TIM0_CDTI0 #4	US2_TX #0	LES_CH2 #0
H3	PD14				I2C0_SDA #3	
H4	PA7	LCD_SEG35	EBI_CSTFT #0/1/2			
H5	PA8	LCD_SEG36	EBI_DCLK #0/1/2	TIM2_CC0 #0		
H6	VSS	Ground.				
H7	IOVDD_3	Digital IO power supply 3.				
H8	PD8	BU_VIN				CMU_CLK1 #1

BGA112 Pin# and Name		Pin Alternate Functionality / Description				
Pin #	Pin Name	Analog	EBI	Timers	Communication	Other
H9	PD5	ADC0_CH5 OPAMP_OUT2 #0			LEU0_RX #0	ETM_TD3 #0/2
H10	PD6	ADC0_CH6 / DAC0_P1 / OPAMP_P1		TIM1_CC0 #4 LE- TIM0_OUT0 #0 PCNT0_S0IN #3	US1_RX #2 I2C0_SDA #1	LES_ALTEX0 #0 ACMP0_O #2 ETM_TD0 #0
H11	PD7	ADC0_CH7 / DAC0_N1 / OPAMP_N1		TIM1_CC1 #4 LE- TIM0_OUT1 #0 PCNT0_S1IN #3	US1_TX #2 I2C0_SCL #1	CMU_CLK0 #2 LES_ALTEX1 #0 ACMP1_O #2 ETM_TCLK #0
J1	PC1	ACMP0_CH1 DAC0_OUT0ALT #1/ OPAMP_OUT0ALT	EBI_A24 #0/1/2	TIM0_CC2 #4 PCNT0_S1IN #2	US0_RX #5 US1_RX #0 I2C0_SCL #4	LES_CH1 #0 PRS_CH3 #0
J2	PC3	ACMP0_CH3 DAC0_OUT0ALT #3/ OPAMP_OUT0ALT	EBI_NANDREn #0/1/2	TIM0_CDTI1 #4	US2_RX #0	LES_CH3 #0
J3	PD15				I2C0_SCL #3	
J4	PA12	LCD_BCAP_P	EBI_A00 #0/1/2	TIM2_CC0 #1		
J5	PA9	LCD_SEG37	EBI_DTEN #0/1/2	TIM2_CC1 #0		
J6	PA10	LCD_SEG38	EBI_VSNC #0/1/2	TIM2_CC2 #0		
J7	PB9		EBI_A03 #0/1/2		U1_TX #2	
J8	PB10		EBI_A04 #0/1/2		U1_RX #2	
J9	PD2	ADC0_CH2	EBI_A27 #0/1/2	TIM0_CC1 #3	US1_CLK #1	DBG_SWO #3
J10	PD3	ADC0_CH3 OPAMP_N2		TIM0_CC2 #3	US1_CS #1	ETM_TD1 #0/2
J11	PD4	ADC0_CH4 OPAMP_P2			LEU0_TX #0	ETM_TD2 #0/2
K1	PB7	LFXTAL_P		TIM1_CC0 #3	US0_TX #4 US1_CLK #0	
K2	PC4	ACMP0_CH4 / DAC0_P0 / OPAMP_P0	EBI_A26 #0/1/2	TIM0_CDTI2 #4 LE- TIM0_OUT0 #3 PCNT1_S0IN #0	US2_CLK #0 I2C1_SDA #0	LES_CH4 #0
K3	PA13	LCD_BCAP_N	EBI_A01 #0/1/2	TIM2_CC1 #1		
K4	VSS	Ground.				
K5	PA11	LCD_SEG39	EBI_HSNC #0/1/2			
K6	RESETn	Reset input, active low. To apply an external reset source to this pin, it is required to only drive this pin low during reset, and let the internal pull-up ensure that reset is released.				
K7	AVSS_1	Analog ground 1.				
K8	AVDD_2	Analog power supply 2.				
K9	AVDD_1	Analog power supply 1.				
K10	AVSS_0	Analog ground 0.				

BGA112 Pin# and Name		Pin Alternate Functionality / Description				
Pin #	Pin Name	Analog	EBI	Timers	Communication	Other
K11	PD1	ADC0_CH1 DAC0_OUT1ALT #4/ OPAMP_OUT1ALT		TIM0_CC0 #3 PCNT2_S1IN #0	US1_RX #1	DBG_SWO #2
L1	PB8	LFXTAL_N		TIM1_CC1 #3	US0_RX #4 US1_CS #0	
L2	PC5	ACMP0_CH5 / DAC0_N0 / OPAMP_N0	EBI_NANDWEn #0/1/2	LETIM0_OUT1 #3 PCNT1_S1IN #0	US2_CS #0 I2C1_SCL #0	LES_CH5 #0
L3	PA14	LCD_BEXT	EBI_A02 #0/1/2	TIM2_CC2 #1		
L4	IOVDD_1	Digital IO power supply 1.				
L5	PB11	DAC0_OUT0 / OPAMP_OUT0		TIM1_CC2 #3 LE-TIM0_OUT0 #1	I2C1_SDA #1	
L6	PB12	DAC0_OUT1 / OPAMP_OUT1		LETIM0_OUT1 #1	I2C1_SCL #1	
L7	AVSS_2	Analog ground 2.				
L8	PB13	HFXTAL_P			US0_CLK #4/5 LEU0_TX #1	
L9	PB14	HFXTAL_N			US0_CS #4/5 LEU0_RX #1	
L10	AVDD_0	Analog power supply 0.				
L11	PD0	ADC0_CH0 DAC0_OUT0ALT #4/ OPAMP_OUT0ALT OPAMP_OUT2 #1		PCNT2_S0IN #0	US1_TX #1	

5.15.2 Alternate Functionality Pinout

A wide selection of alternate functionality is available for multiplexing to various pins. This is shown in the following table. The table shows the name of the alternate functionality in the first column, followed by columns showing the possible LOCATION bitfield settings.

Note: Some functionality, such as analog interfaces, do not have alternate settings or a LOCATION bitfield. In these cases, the pinout is shown in the column corresponding to LOCATION 0.

Table 5.44. Alternate Functionality Overview

Alternate	LOCATION							
Functionality	0	1	2	3	4	5	6	Description
ACMP0_CH0	PC0							Analog comparator ACMP0, channel 0.
ACMP0_CH1	PC1							Analog comparator ACMP0, channel 1.
ACMP0_CH2	PC2							Analog comparator ACMP0, channel 2.
ACMP0_CH3	PC3							Analog comparator ACMP0, channel 3.
ACMP0_CH4	PC4							Analog comparator ACMP0, channel 4.
ACMP0_CH5	PC5							Analog comparator ACMP0, channel 5.
ACMP0_CH6	PC6							Analog comparator ACMP0, channel 6.
ACMP0_CH7	PC7							Analog comparator ACMP0, channel 7.
ACMP0_O	PE13	PE2	PD6					Analog comparator ACMP0, digital output.
ACMP1_CH0	PC8							Analog comparator ACMP1, channel 0.
ACMP1_CH1	PC9							Analog comparator ACMP1, channel 1.
ACMP1_CH2	PC10							Analog comparator ACMP1, channel 2.
ACMP1_CH3	PC11							Analog comparator ACMP1, channel 3.
ACMP1_CH4	PC12							Analog comparator ACMP1, channel 4.
ACMP1_CH5	PC13							Analog comparator ACMP1, channel 5.
ACMP1_CH6	PC14							Analog comparator ACMP1, channel 6.
ACMP1_CH7	PC15							Analog comparator ACMP1, channel 7.
ACMP1_O	PF2	PE3	PD7					Analog comparator ACMP1, digital output.
ADC0_CH0	PD0							Analog to digital converter ADC0, input channel number 0.
ADC0_CH1	PD1							Analog to digital converter ADC0, input channel number 1.
ADC0_CH2	PD2							Analog to digital converter ADC0, input channel number 2.
ADC0_CH3	PD3							Analog to digital converter ADC0, input channel number 3.
ADC0_CH4	PD4							Analog to digital converter ADC0, input channel number 4.
ADC0_CH5	PD5							Analog to digital converter ADC0, input channel number 5.
ADC0_CH6	PD6							Analog to digital converter ADC0, input channel number 6.

Alternate	LOCATION							
Functionality	0	1	2	3	4	5	6	Description
ADC0_CH7	PD7							Analog to digital converter ADC0, input channel number 7.
BOOT_RX	PE11							Bootloader RX.
BOOT_TX	PE10							Bootloader TX.
BU_STAT	PE3							Backup Power Domain status, whether or not the system is in backup mode
BU_VIN	PD8							Battery input for Backup Power Domain
BU_VOUT	PE2							Power output for Backup Power Domain
CMU_CLK0	PA2	PC12	PD7					Clock Management Unit, clock output number 0.
CMU_CLK1	PA1	PD8	PE12					Clock Management Unit, clock output number 1.
DAC0_OUT0 / OPAMP_OUT0	PB11							Digital to Analog Converter DAC0_OUT0 /OPAMP output channel number 0.
DAC0_OUT0ALT / OPAMP_OUT0ALT	PC0	PC1	PC2	PC3	PD0			Digital to Analog Converter DAC0_OUT0ALT / OPAMP alternative output for channel 0.
DAC0_OUT1 / OPAMP_OUT1	PB12							Digital to Analog Converter DAC0_OUT1 /OPAMP output channel number 1.
DAC0_OUT1ALT / OPAMP_OUT1ALT	PC12	PC13	PC14	PC15	PD1			Digital to Analog Converter DAC0_OUT1ALT / OPAMP alternative output for channel 1.
DBG_SWCLK	PF0	PF0	PF0	PF0				Debug-interface Serial Wire clock input. Note that this function is enabled to pin out of reset, and has a built-in pull down.
DBG_SWDIO	PF1	PF1	PF1	PF1				Debug-interface Serial Wire data input / output. Note that this function is enabled to pin out of reset, and has a built-in pull up.
DBG_SWO	PF2	PC15	PD1	PD2				Debug-interface Serial Wire viewer Output. Note that this function is not enabled after reset, and must be enabled by software to be used.
EBI_A00	PA12	PA12	PA12					External Bus Interface (EBI) address output pin 00.
EBI_A01	PA13	PA13	PA13					External Bus Interface (EBI) address output pin 01.
EBI_A02	PA14	PA14	PA14					External Bus Interface (EBI) address output pin 02.
EBI_A03	PB9	PB9	PB9					External Bus Interface (EBI) address output pin 03.
EBI_A04	PB10	PB10	PB10					External Bus Interface (EBI) address output pin 04.
EBI_A05	PC6	PC6	PC6					External Bus Interface (EBI) address output pin 05.
EBI_A06	PC7	PC7	PC7					External Bus Interface (EBI) address output pin 06.
EBI_A07	PE0	PE0	PE0					External Bus Interface (EBI) address output pin 07.
EBI_A08	PE1	PE1	PE1					External Bus Interface (EBI) address output pin 08.
EBI_A09	PE2	PC9	PC9					External Bus Interface (EBI) address output pin 09.
EBI_A10	PE3	PC10	PC10					External Bus Interface (EBI) address output pin 10.

Alternate	LOCATION							
Functionality	0	1	2	3	4	5	6	Description
EBI_A11	PE4	PE4	PE4					External Bus Interface (EBI) address output pin 11.
EBI_A12	PE5	PE5	PE5					External Bus Interface (EBI) address output pin 12.
EBI_A13	PE6	PE6	PE6					External Bus Interface (EBI) address output pin 13.
EBI_A14	PE7	PE7	PE7					External Bus Interface (EBI) address output pin 14.
EBI_A15	PC8	PC8	PC8					External Bus Interface (EBI) address output pin 15.
EBI_A16	PB0	PB0	PB0					External Bus Interface (EBI) address output pin 16.
EBI_A17	PB1	PB1	PB1					External Bus Interface (EBI) address output pin 17.
EBI_A18	PB2	PB2	PB2					External Bus Interface (EBI) address output pin 18.
EBI_A19	PB3	PB3	PB3					External Bus Interface (EBI) address output pin 19.
EBI_A20	PB4	PB4	PB4					External Bus Interface (EBI) address output pin 20.
EBI_A21	PB5	PB5	PB5					External Bus Interface (EBI) address output pin 21.
EBI_A22	PB6	PB6	PB6					External Bus Interface (EBI) address output pin 22.
EBI_A23	PC0	PC0	PC0					External Bus Interface (EBI) address output pin 23.
EBI_A24	PC1	PC1	PC1					External Bus Interface (EBI) address output pin 24.
EBI_A25	PC2	PC2	PC2					External Bus Interface (EBI) address output pin 25.
EBI_A26	PC4	PC4	PC4					External Bus Interface (EBI) address output pin 26.
EBI_A27	PD2	PD2	PD2					External Bus Interface (EBI) address output pin 27.
EBI_AD00	PE8	PE8	PE8					External Bus Interface (EBI) address and data input / output pin 00.
EBI_AD01	PE9	PE9	PE9					External Bus Interface (EBI) address and data input / output pin 01.
EBI_AD02	PE10	PE10	PE10					External Bus Interface (EBI) address and data input / output pin 02.
EBI_AD03	PE11	PE11	PE11					External Bus Interface (EBI) address and data input / output pin 03.
EBI_AD04	PE12	PE12	PE12					External Bus Interface (EBI) address and data input / output pin 04.
EBI_AD05	PE13	PE13	PE13					External Bus Interface (EBI) address and data input / output pin 05.
EBI_AD06	PE14	PE14	PE14					External Bus Interface (EBI) address and data input / output pin 06.
EBI_AD07	PE15	PE15	PE15					External Bus Interface (EBI) address and data input / output pin 07.
EBI_AD08	PA15	PA15	PA15					External Bus Interface (EBI) address and data input / output pin 08.
EBI_AD09	PA0	PA0	PA0					External Bus Interface (EBI) address and data input / output pin 09.
EBI_AD10	PA1	PA1	PA1					External Bus Interface (EBI) address and data input / output pin 10.
EBI_AD11	PA2	PA2	PA2					External Bus Interface (EBI) address and data input / output pin 11.

Alternate	LOCATION							
Functionality	0	1	2	3	4	5	6	Description
EBI_AD12	PA3	PA3	PA3					External Bus Interface (EBI) address and data input / output pin 12.
EBI_AD13	PA4	PA4	PA4					External Bus Interface (EBI) address and data input / output pin 13.
EBI_AD14	PA5	PA5	PA5					External Bus Interface (EBI) address and data input / output pin 14.
EBI_AD15	PA6	PA6	PA6					External Bus Interface (EBI) address and data input / output pin 15.
EBI_ALE	PF3	PC11	PC11					External Bus Interface (EBI) Address Latch Enable output.
EBI_ARDY	PF2	PF2	PF2					External Bus Interface (EBI) Hardware Ready Control input.
EBI_BL0	PF6	PF6	PF6					External Bus Interface (EBI) Byte Lane/Enable pin 0.
EBI_BL1	PF7	PF7	PF7					External Bus Interface (EBI) Byte Lane/Enable pin 1.
EBI_CS0	PD9	PD9	PD9					External Bus Interface (EBI) Chip Select output 0.
EBI_CS1	PD10	PD10	PD10					External Bus Interface (EBI) Chip Select output 1.
EBI_CS2	PD11	PD11	PD11					External Bus Interface (EBI) Chip Select output 2.
EBI_CS3	PD12	PD12	PD12					External Bus Interface (EBI) Chip Select output 3.
EBI_CSTFT	PA7	PA7	PA7					External Bus Interface (EBI) Chip Select output TFT.
EBI_DCLK	PA8	PA8	PA8					External Bus Interface (EBI) TFT Dot Clock pin.
EBI_DTEN	PA9	PA9	PA9					External Bus Interface (EBI) TFT Data Enable pin.
EBI_HSNC	PA11	PA11	PA11					External Bus Interface (EBI) TFT Horizontal Synchronization pin.
EBI_NANDREn	PC3	PC3	PC3					External Bus Interface (EBI) NAND Read Enable output.
EBI_NANDWEn	PC5	PC5	PC5					External Bus Interface (EBI) NAND Write Enable output.
EBI_REn	PF5	PF9	PF5					External Bus Interface (EBI) Read Enable output.
EBI_VSNC	PA10	PA10	PA10					External Bus Interface (EBI) TFT Vertical Synchronization pin.
EBI_WEn	PF4	PF8	PF4					External Bus Interface (EBI) Write Enable output.
ETM_TCLK	PD7	PF8	PC6	PA6				Embedded Trace Module ETM clock .
ETM_TD0	PD6	PF9	PC7	PA2				Embedded Trace Module ETM data 0.
ETM_TD1	PD3	PD13	PD3	PA3				Embedded Trace Module ETM data 1.
ETM_TD2	PD4	PB15	PD4	PA4				Embedded Trace Module ETM data 2.
ETM_TD3	PD5	PF3	PD5	PA5				Embedded Trace Module ETM data 3.
GPIO_EM4WU0	PA0							Pin can be used to wake the system up from EM4
GPIO_EM4WU1	PA6							Pin can be used to wake the system up from EM4

Alternate	LOCATION							
Functionality	0	1	2	3	4	5	6	Description
GPIO_EM4WU2	PC9							Pin can be used to wake the system up from EM4
GPIO_EM4WU3	PF1							Pin can be used to wake the system up from EM4
GPIO_EM4WU4	PF2							Pin can be used to wake the system up from EM4
GPIO_EM4WU5	PE13							Pin can be used to wake the system up from EM4
HFXTAL_N	PB14							High Frequency Crystal negative pin. Also used as external optional clock input pin.
HFXTAL_P	PB13							High Frequency Crystal positive pin.
I2C0_SCL	PA1	PD7	PC7	PD15	PC1	PF1	PE13	I2C0 Serial Clock Line input / output.
I2C0_SDA	PA0	PD6	PC6	PD14	PC0	PF0	PE12	I2C0 Serial Data input / output.
I2C1_SCL	PC5	PB12	PE1					I2C1 Serial Clock Line input / output.
I2C1_SDA	PC4	PB11	PE0					I2C1 Serial Data input / output.
LCD_BCAP_N	PA13							LCD voltage booster (optional), boost capacitor, negative pin. If using the LCD voltage booster, connect a 22 nF capacitor between LCD_BCAP_N and LCD_BCAP_P.
LCD_BCAP_P	PA12							LCD voltage booster (optional), boost capacitor, positive pin. If using the LCD voltage booster, connect a 22 nF capacitor between LCD_BCAP_N and LCD_BCAP_P.
LCD_BEXT	PA14							LCD voltage booster (optional), boost output. If using the LCD voltage booster, connect a 1 uF capacitor between this pin and VSS. An external LCD voltage may also be applied to this pin if the booster is not enabled. If AVDD is used directly as the LCD supply voltage, this pin may be left unconnected or used as a GPIO.
LCD_COM0	PE4							LCD driver common line number 0.
LCD_COM1	PE5							LCD driver common line number 1.
LCD_COM2	PE6							LCD driver common line number 2.
LCD_COM3	PE7							LCD driver common line number 3.
LCD_SEG0	PF2							LCD segment line 0. Segments 0, 1, 2 and 3 are controlled by SEGEN0.
LCD_SEG1	PF3							LCD segment line 1. Segments 0, 1, 2 and 3 are controlled by SEGEN0.
LCD_SEG2	PF4							LCD segment line 2. Segments 0, 1, 2 and 3 are controlled by SEGEN0.
LCD_SEG3	PF5							LCD segment line 3. Segments 0, 1, 2 and 3 are controlled by SEGEN0.
LCD_SEG4	PE8							LCD segment line 4. Segments 4, 5, 6 and 7 are controlled by SEGEN1.
LCD_SEG5	PE9							LCD segment line 5. Segments 4, 5, 6 and 7 are controlled by SEGEN1.

Alternate	LOCATION							
Functionality	0	1	2	3	4	5	6	Description
LCD_SEG6	PE10							LCD segment line 6. Segments 4, 5, 6 and 7 are controlled by SEGEN1.
LCD_SEG7	PE11							LCD segment line 7. Segments 4, 5, 6 and 7 are controlled by SEGEN1.
LCD_SEG8	PE12							LCD segment line 8. Segments 8, 9, 10 and 11 are controlled by SEGEN2.
LCD_SEG9	PE13							LCD segment line 9. Segments 8, 9, 10 and 11 are controlled by SEGEN2.
LCD_SEG10	PE14							LCD segment line 10. Segments 8, 9, 10 and 11 are controlled by SEGEN2.
LCD_SEG11	PE15							LCD segment line 11. Segments 8, 9, 10 and 11 are controlled by SEGEN2.
LCD_SEG12	PA15							LCD segment line 12. Segments 12, 13, 14 and 15 are controlled by SEGEN3.
LCD_SEG13	PA0							LCD segment line 13. Segments 12, 13, 14 and 15 are controlled by SEGEN3.
LCD_SEG14	PA1							LCD segment line 14. Segments 12, 13, 14 and 15 are controlled by SEGEN3.
LCD_SEG15	PA2							LCD segment line 15. Segments 12, 13, 14 and 15 are controlled by SEGEN3.
LCD_SEG16	PA3							LCD segment line 16. Segments 16, 17, 18 and 19 are controlled by SEGEN4.
LCD_SEG17	PA4							LCD segment line 17. Segments 16, 17, 18 and 19 are controlled by SEGEN4.
LCD_SEG18	PA5							LCD segment line 18. Segments 16, 17, 18 and 19 are controlled by SEGEN4.
LCD_SEG19	PA6							LCD segment line 19. Segments 16, 17, 18 and 19 are controlled by SEGEN4.
LCD_SEG20/ LCD_COM4	PB3							LCD segment line 20. Segments 20, 21, 22 and 23 are controlled by SEGEN5. This pin may also be used as LCD COM line 4
LCD_SEG21/ LCD_COM5	PB4							LCD segment line 21. Segments 20, 21, 22 and 23 are controlled by SEGEN5. This pin may also be used as LCD COM line 5
LCD_SEG22/ LCD_COM6	PB5							LCD segment line 22. Segments 20, 21, 22 and 23 are controlled by SEGEN5. This pin may also be used as LCD COM line 6
LCD_SEG23/ LCD_COM7	PB6							LCD segment line 23. Segments 20, 21, 22 and 23 are controlled by SEGEN5. This pin may also be used as LCD COM line 7
LCD_SEG24	PF6							LCD segment line 24. Segments 24, 25, 26 and 27 are controlled by SEGEN6.
LCD_SEG25	PF7							LCD segment line 25. Segments 24, 25, 26 and 27 are controlled by SEGEN6.
LCD_SEG26	PF8							LCD segment line 26. Segments 24, 25, 26 and 27 are controlled by SEGEN6.

Alternate	LOCATION							
Functionality	0	1	2	3	4	5	6	Description
LCD_SEG27	PF9							LCD segment line 27. Segments 24, 25, 26 and 27 are controlled by SEGEN6.
LCD_SEG28	PD9							LCD segment line 28. Segments 28, 29, 30 and 31 are controlled by SEGEN7.
LCD_SEG29	PD10							LCD segment line 29. Segments 28, 29, 30 and 31 are controlled by SEGEN7.
LCD_SEG30	PD11							LCD segment line 30. Segments 28, 29, 30 and 31 are controlled by SEGEN7.
LCD_SEG31	PD12							LCD segment line 31. Segments 28, 29, 30 and 31 are controlled by SEGEN7.
LCD_SEG32	PB0							LCD segment line 32. Segments 32, 33, 34 and 35 are controlled by SEGEN8.
LCD_SEG33	PB1							LCD segment line 33. Segments 32, 33, 34 and 35 are controlled by SEGEN8.
LCD_SEG34	PB2							LCD segment line 34. Segments 32, 33, 34 and 35 are controlled by SEGEN8.
LCD_SEG35	PA7							LCD segment line 35. Segments 32, 33, 34 and 35 are controlled by SEGEN8.
LCD_SEG36	PA8							LCD segment line 36. Segments 36, 37, 38 and 39 are controlled by SEGEN9.
LCD_SEG37	PA9							LCD segment line 37. Segments 36, 37, 38 and 39 are controlled by SEGEN9.
LCD_SEG38	PA10							LCD segment line 38. Segments 36, 37, 38 and 39 are controlled by SEGEN9.
LCD_SEG39	PA11							LCD segment line 39. Segments 36, 37, 38 and 39 are controlled by SEGEN9.
LES_ALTEX0	PD6							LESENSE alternate exite output 0.
LES_ALTEX1	PD7							LESENSE alternate exite output 1.
LES_ALTEX2	PA3							LESENSE alternate exite output 2.
LES_ALTEX3	PA4							LESENSE alternate exite output 3.
LES_ALTEX4	PA5							LESENSE alternate exite output 4.
LES_ALTEX5	PE11							LESENSE alternate exite output 5.
LES_ALTEX6	PE12							LESENSE alternate exite output 6.
LES_ALTEX7	PE13							LESENSE alternate exite output 7.
LES_CH0	PC0							LESENSE channel 0.
LES_CH1	PC1							LESENSE channel 1.
LES_CH2	PC2							LESENSE channel 2.
LES_CH3	PC3							LESENSE channel 3.
LES_CH4	PC4							LESENSE channel 4.
LES_CH5	PC5							LESENSE channel 5.
LES_CH6	PC6							LESENSE channel 6.

Alternate	LOCATION							
Functionality	0	1	2	3	4	5	6	Description
LES_CH7	PC7							LESENSE channel 7.
LES_CH8	PC8							LESENSE channel 8.
LES_CH9	PC9							LESENSE channel 9.
LES_CH10	PC10							LESENSE channel 10.
LES_CH11	PC11							LESENSE channel 11.
LES_CH12	PC12							LESENSE channel 12.
LES_CH13	PC13							LESENSE channel 13.
LES_CH14	PC14							LESENSE channel 14.
LES_CH15	PC15							LESENSE channel 15.
LETIM0_OUT0	PD6	PB11	PF0	PC4				Low Energy Timer LETIM0, output channel 0.
LETIM0_OUT1	PD7	PB12	PF1	PC5				Low Energy Timer LETIM0, output channel 1.
LEU0_RX	PD5	PB14	PE15	PF1	PA0			LEUART0 Receive input.
LEU0_TX	PD4	PB13	PE14	PF0	PF2			LEUART0 Transmit output. Also used as receive input in half duplex communication.
LEU1_RX	PC7	PA6						LEUART1 Receive input.
LEU1_TX	PC6	PA5						LEUART1 Transmit output. Also used as receive input in half duplex communication.
LFXTAL_N	PB8							Low Frequency Crystal (typically 32.768 kHz) negative pin. Also used as an optional external clock input pin.
OPAMP_N0 / DAC0_N0	PC5							Operational Amplifier 0 external negative input.
OPAMP_N1 / DAC0_N1	PD7							Operational Amplifier 1 external negative input.
OPAMP_N2	PD3							Operational Amplifier 2 external negative input.
OPAMP_OUT2	PD5	PD0						Operational Amplifier 2 output.
OPAMP_P0 / DAC0_P0	PC4							Operational Amplifier 0 external positive input.
OPAMP_P1 / DAC0_P1	PD6							Operational Amplifier 1 external positive input.
OPAMP_P2	PD4							Operational Amplifier 2 external positive input.
LFXTAL_P	PB7							Low Frequency Crystal (typically 32.768 kHz) positive pin.
PCNT0_S0IN	PC13	PE0	PC0	PD6				Pulse Counter PCNT0 input number 0.
PCNT0_S1IN	PC14	PE1	PC1	PD7				Pulse Counter PCNT0 input number 1.
PCNT1_S0IN	PC4	PB3						Pulse Counter PCNT1 input number 0.
PCNT1_S1IN	PC5	PB4						Pulse Counter PCNT1 input number 1.
PCNT2_S0IN	PD0	PE8						Pulse Counter PCNT2 input number 0.
PCNT2_S1IN	PD1	PE9						Pulse Counter PCNT2 input number 1.
PRS_CH0	PA0	PF3						Peripheral Reflex System PRS, channel 0.

Alternate	LOCATION							
Functionality	0	1	2	3	4	5	6	Description
PRS_CH1	PA1	PF4						Peripheral Reflex System PRS, channel 1.
PRS_CH2	PC0	PF5						Peripheral Reflex System PRS, channel 2.
PRS_CH3	PC1	PE8						Peripheral Reflex System PRS, channel 3.
TIM0_CC0	PA0	PA0	PF6	PD1	PA0	PF0		Timer 0 Capture Compare input / output channel 0.
TIM0_CC1	PA1	PA1	PF7	PD2	PC0	PF1		Timer 0 Capture Compare input / output channel 1.
TIM0_CC2	PA2	PA2	PF8	PD3	PC1	PF2		Timer 0 Capture Compare input / output channel 2.
TIM0_CDTI0	PA3	PC13	PF3	PC13	PC2	PF3		Timer 0 Complimentary Dead Time Insertion channel 0.
TIM0_CDTI1	PA4	PC14	PF4	PC14	PC3	PF4		Timer 0 Complimentary Dead Time Insertion channel 1.
TIM0_CDTI2	PA5	PC15	PF5	PC15	PC4	PF5		Timer 0 Complimentary Dead Time Insertion channel 2.
TIM1_CC0	PC13	PE10	PB0	PB7	PD6			Timer 1 Capture Compare input / output channel 0.
TIM1_CC1	PC14	PE11	PB1	PB8	PD7			Timer 1 Capture Compare input / output channel 1.
TIM1_CC2	PC15	PE12	PB2	PB11	PC13			Timer 1 Capture Compare input / output channel 2.
TIM2_CC0	PA8	PA12	PC8					Timer 2 Capture Compare input / output channel 0.
TIM2_CC1	PA9	PA13	PC9					Timer 2 Capture Compare input / output channel 1.
TIM2_CC2	PA10	PA14	PC10					Timer 2 Capture Compare input / output channel 2.
TIM3_CC0	PE14	PE0						Timer 3 Capture Compare input / output channel 0.
TIM3_CC1	PE15	PE1						Timer 3 Capture Compare input / output channel 1.
TIM3_CC2	PA15	PE2						Timer 3 Capture Compare input / output channel 2.
U0_RX	PF7	PE1	PA4	PC15				UART0 Receive input.
U0_TX	PF6	PE0	PA3	PC14				UART0 Transmit output. Also used as receive input in half duplex communication.
U1_RX	PC13		PB10	PE3				UART1 Receive input.
U1_TX	PC12		PB9	PE2				UART1 Transmit output. Also used as receive input in half duplex communication.
US0_CLK	PE12	PE5	PC9	PC15	PB13	PB13		USART0 clock input / output.
US0_CS	PE13	PE4	PC8	PC14	PB14	PB14		USART0 chip select input / output.
US0_RX	PE11	PE6	PC10	PE12	PB8	PC1		USART0 Asynchronous Receive. USART0 Synchronous mode Main Input / Secondary Output (MISO).
US0_TX	PE10	PE7	PC11	PE13	PB7	PC0		USART0 Asynchronous Transmit.Also used as receive input in half duplex communication. USART0 Synchronous mode Main Output / Secondary Input (MOSI).
US1_CLK	PB7	PD2	PF0					USART1 clock input / output.
US1_CS	PB8	PD3	PF1					USART1 chip select input / output.

Alternate	LOCATION							
Functionality	0	1	2	3	4	5	6	Description
US1_RX	PC1	PD1	PD6					USART1 Asynchronous Receive. USART1 Synchronous mode Main Input / Secondary Output (MISO).
US1_TX	PC0	PD0	PD7					USART1 Asynchronous Transmit.Also used as receive input in half duplex communication. USART1 Synchronous mode Main Output / Secondary Input (MOSI).
US2_CLK	PC4	PB5						USART2 clock input / output.
US2_CS	PC5	PB6						USART2 chip select input / output.
US2_RX	PC3	PB4						USART2 Asynchronous Receive. USART2 Synchronous mode Main Input / Secondary Output (MISO).
US2_TX	PC2	PB3						USART2 Asynchronous Transmit.Also used as receive input in half duplex communication. USART2 Synchronous mode Main Output / Secondary Input (MOSI).

5.15.3 GPIO Pinout Overview

The specific GPIO pins available in EFM32WG890 are shown in the following table. Each GPIO port is organized as 16-bit ports indicated by letters A through F, and the individual pin on this port is indicated by a number from 15 down to 0.

Table 5.45. GPIO Pinout

Port	Pin 15	Pin 14	Pin 13	Pin 12	Pin 11	Pin 10	Pin 9	Pin 8	Pin 7	Pin 6	Pin 5	Pin 4	Pin 3	Pin 2	Pin 1	Pin 0
Port A	PA15	PA14	PA13	PA12	PA11	PA10	PA9	PA8	PA7	PA6	PA5	PA4	PA3	PA2	PA1	PA0
Port B	PB15	PB14	PB13	PB12	PB11	PB10	PB9	PB8	PB7	PB6	PB5	PB4	PB3	PB2	PB1	PB0
Port C	PC15	PC14	PC13	PC12	PC11	PC10	PC9	PC8	PC7	PC6	PC5	PC4	PC3	PC2	PC1	PC0
Port D	PD15	PD14	PD13	PD12	PD11	PD10	PD9	PD8	PD7	PD6	PD5	PD4	PD3	PD2	PD1	PD0
Port E	PE15	PE14	PE13	PE12	PE11	PE10	PE9	PE8	PE7	PE6	PE5	PE4	PE3	PE2	PE1	PE0
Port F	—	—	—	—	—	—	PF9	PF8	PF7	PF6	PF5	PF4	PF3	PF2	PF1	PF0

5.15.4 Opamp Pinout Overview

The specific opamp terminals available in EFM32WG890 is shown in the following figure.

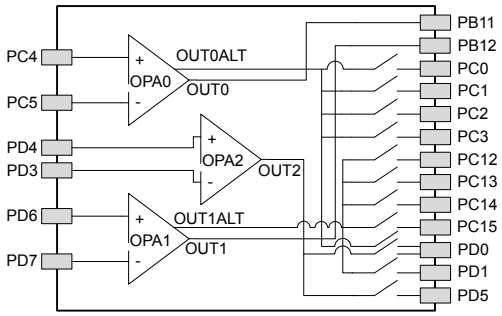

Figure 5.30. Opamp Pinout

5.16 EFM32WG895 (BGA120)

5.16.1 Pinout

The EFM32WG895 pinout is shown in the following figure and table. Alternate locations are denoted by "#" followed by the location number (Multiple locations on the same pin are split with "/"). Alternate locations can be configured in the LOCATION bitfield in the *_ROUTE register in the module in question.

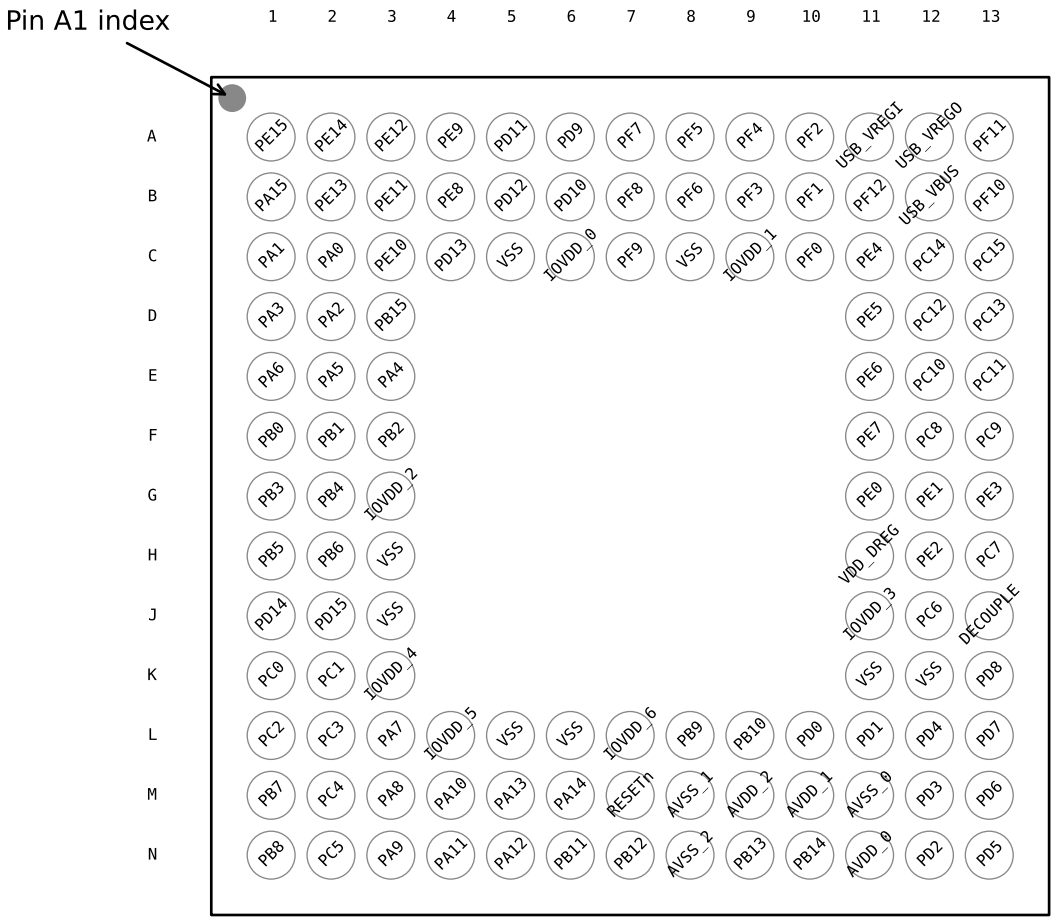

Figure 5.31. EFM32WG895 Pinout (top view, not to scale)

Table 5.46. Device Pinout

BGA120 Pin# and Name		Pin Alternate Functionality / Description				
Pin #	Pin Name	Analog	EBI	Timers	Communication	Other
A1	PE15	LCD_SEG11	EBI_AD07 #0/1/2	TIM3_CC1 #0	LEU0_RX #2	
A2	PE14	LCD_SEG10	EBI_AD06 #0/1/2	TIM3_CC0 #0	LEU0_TX #2	
A3	PE12	LCD_SEG8	EBI_AD04 #0/1/2	TIM1_CC2 #1	US0_RX #3 US0_CLK #0 I2C0_SDA #6	CMU_CLK1 #2 LES_ALTEX6 #0
A4	PE9	LCD_SEG5	EBI_AD01 #0/1/2	PCNT2_S1IN #1		
A5	PD11	LCD_SEG30	EBI_CS2 #0/1/2			
A6	PD9	LCD_SEG28	EBI_CS0 #0/1/2			
A7	PF7	LCD_SEG25	EBI_BL1 #0/1/2	TIM0_CC1 #2	U0_RX #0	
A8	PF5	LCD_SEG3	EBI_REn #0/2	TIM0_CDTI2 #2/5		PRS_CH2 #1
A9	PF4	LCD_SEG2	EBI_WEn #0/2	TIM0_CDTI1 #2/5		PRS_CH1 #1
A10	PF2	LCD_SEG0	EBI_ARDY #0/1/2	TIM0_CC2 #5	LEU0_TX #4	ACMP1_O #0 DBG_SWO #0 GPIO_EM4WU4
A11	USB_VREGI	Input to internal 3.3V USB regulator				
A12	USB_VREGO	Output and decoupling for internal 3.3V USB regulator				
A13	PF11				U1_RX #1	
B1	PA15	LCD_SEG12	EBI_AD08 #0/1/2	TIM3_CC2 #0		
B2	PE13	LCD_SEG9	EBI_AD05 #0/1/2		US0_TX #3 US0_CS #0 I2C0_SCL #6	LES_ALTEX7 #0 ACMP0_O #0 GPIO_EM4WU5
B3	PE11	LCD_SEG7	EBI_AD03 #0/1/2	TIM1_CC1 #1	US0_RX #0	LES_ALTEX5 #0 BOOT_RX
B4	PE8	LCD_SEG4	EBI_AD00 #0/1/2	PCNT2_S0IN #1		PRS_CH3 #1
B5	PD12	LCD_SEG31	EBI_CS3 #0/1/2			
B6	PD10	LCD_SEG29	EBI_CS1 #0/1/2			
B7	PF8	LCD_SEG26	EBI_WEn #1	TIM0_CC2 #2		ETM_TCLK #1
B8	PF6	LCD_SEG24	EBI_BL0 #0/1/2	TIM0_CC0 #2	U0_TX #0	
B9	PF3	LCD_SEG1	EBI_ALE #0	TIM0_CDTI0 #2/5		PRS_CH0 #1 ETM_TD3 #1
B10	PF1			TIM0_CC1 #5 LE-TIM0_OUT1 #2	US1_CS #2 LEU0_RX #3 I2C0_SCL #5	DBG_SWDIO #0/1/2/3 GPIO_EM4WU3
B11	PF12					
B12	USB_VBUS	USB 5.0 V VBUS input.				
B13	PF10				U1_TX #1	
C1	PA1	LCD_SEG14	EBI_AD10 #0/1/2	TIM0_CC1 #0/1	I2C0_SCL #0	CMU_CLK1 #0 PRS_CH1 #0

BGA120 Pin# and Name		Pin Alternate Functionality / Description				
Pin #	Pin Name	Analog	EBI	Timers	Communication	Other
C2	PA0	LCD_SEG13	EBI_AD09 #0/1/2	TIM0_CC0 #0/1/4	LEU0_RX #4 I2C0_SDA #0	PRS_CH0 #0 GPIO_EM4WU0
C3	PE10	LCD_SEG6	EBI_AD02 #0/1/2	TIM1_CC0 #1	US0_TX #0	BOOT_TX
C4	PD13					ETM_TD1 #1
C5	VSS	Ground.				
C6	IOVDD_0	Digital IO power supply 0.				
C7	PF9	LCD_SEG27	EBI_REn #1			ETM_TD0 #1
C8	VSS	Ground.				
C9	IOVDD_1	Digital IO power supply 1.				
C10	PF0			TIM0_CC0 #5 LE-TIM0_OUT0 #2	US1_CLK #2 LEU0_TX #3 I2C0_SDA #5	DBG_SWCLK #0/1/2/3
C11	PE4	LCD_COM0	EBI_A11 #0/1/2		US0_CS #1	
C12	PC14	ACMP1_CH6 DAC0_OUT1ALT #2/ OPAMP_OUT1ALT		TIM0_CDTI1 #1/3 TIM1_CC1 #0 PCNT0_S1IN #0	US0_CS #3 U0_TX #3	LES_CH14 #0
C13	PC15	ACMP1_CH7 DAC0_OUT1ALT #3/ OPAMP_OUT1ALT		TIM0_CDTI2 #1/3 TIM1_CC2 #0	US0_CLK #3 U0_RX #3	LES_CH15 #0 DBG_SWO #1
D1	PA3	LCD_SEG16	EBI_AD12 #0/1/2	TIM0_CDTI0 #0	U0_TX #2	LES_ALTEX2 #0 ETM_TD1 #3
D2	PA2	LCD_SEG15	EBI_AD11 #0/1/2	TIM0_CC2 #0/1		CMU_CLK0 #0 ETM_TD0 #3
D3	PB15					ETM_TD2 #1
D11	PE5	LCD_COM1	EBI_A12 #0/1/2		US0_CLK #1	
D12	PC12	ACMP1_CH4 DAC0_OUT1ALT #0/ OPAMP_OUT1ALT			U1_TX #0	CMU_CLK0 #1 LES_CH12 #0
D13	PC13	ACMP1_CH5 DAC0_OUT1ALT #1/ OPAMP_OUT1ALT		TIM0_CDTI0 #1/3 TIM1_CC0 #0 TIM1_CC2 #4 PCNT0_S0IN #0	U1_RX #0	LES_CH13 #0
E1	PA6	LCD_SEG19	EBI_AD15 #0/1/2		LEU1_RX #1	ETM_TCLK #3 GPIO_EM4WU1
E2	PA5	LCD_SEG18	EBI_AD14 #0/1/2	TIM0_CDTI2 #0	LEU1_TX #1	LES_ALTEX4 #0 ETM_TD3 #3
E3	PA4	LCD_SEG17	EBI_AD13 #0/1/2	TIM0_CDTI1 #0	U0_RX #2	LES_ALTEX3 #0 ETM_TD2 #3
E11	PE6	LCD_COM2	EBI_A13 #0/1/2		US0_RX #1	
E12	PC10	ACMP1_CH2	EBI_A10 #1/2	TIM2_CC2 #2	US0_RX #2	LES_CH10 #0
E13	PC11	ACMP1_CH3	EBI_ALE #1/2		US0_TX #2	LES_CH11 #0

BGA120 Pin# and Name		Pin Alternate Functionality / Description				
Pin #	Pin Name	Analog	EBI	Timers	Communication	Other
F1	PB0	LCD_SEG32	EBI_A16 #0/1/2	TIM1_CC0 #2		
F2	PB1	LCD_SEG33	EBI_A17 #0/1/2	TIM1_CC1 #2		
F3	PB2	LCD_SEG34	EBI_A18 #0/1/2	TIM1_CC2 #2		
F11	PE7	LCD_COM3	EBI_A14 #0/1/2		US0_TX #1	
F12	PC8	ACMP1_CH0	EBI_A15 #0/1/2	TIM2_CC0 #2	US0_CS #2	LES_CH8 #0
F13	PC9	ACMP1_CH1	EBI_A09 #1/2	TIM2_CC1 #2	US0_CLK #2	LES_CH9 #0 GPIO_EM4WU2
G1	PB3	LCD_SEG20/ LCD_COM4	EBI_A19 #0/1/2	PCNT1_S0IN #1	US2_TX #1	
G2	PB4	LCD_SEG21/ LCD_COM5	EBI_A20 #0/1/2	PCNT1_S1IN #1	US2_RX #1	
G3	IOVDD_2	Digital IO power supply 2.				
G11	PE0		EBI_A07 #0/1/2	TIM3_CC0 #1 PCNT0_S0IN #1	U0_TX #1 I2C1_SDA #2	
G12	PE1		EBI_A08 #0/1/2	TIM3_CC1 #1 PCNT0_S1IN #1	U0_RX #1 I2C1_SCL #2	
G13	PE3	BU_STAT	EBI_A10 #0		U1_RX #3	ACMP1_O #1
H1	PB5	LCD_SEG22/ LCD_COM6	EBI_A21 #0/1/2		US2_CLK #1	
H2	PB6	LCD_SEG23/ LCD_COM7	EBI_A22 #0/1/2		US2_CS #1	
H3	VSS	Ground.				
H11	VDD_DREG	Power supply for on-chip voltage regulator.				
H12	PE2	BU_VOUT	EBI_A09 #0	TIM3_CC2 #1	U1_TX #3	ACMP0_O #1
H13	PC7	ACMP0_CH7	EBI_A06 #0/1/2		LEU1_RX #0 I2C0_SCL #2	LES_CH7 #0 ETM_TD0 #2
J1	PD14				I2C0_SDA #3	
J2	PD15				I2C0_SCL #3	
J3	VSS	Ground.				
J11	IOVDD_3	Digital IO power supply 3.				
J12	PC6	ACMP0_CH6	EBI_A05 #0/1/2		LEU1_TX #0 I2C0_SDA #2	LES_CH6 #0 ETM_TCLK #2
J13	DECOUPLE	Decouple output for on-chip voltage regulator. An external capacitance of size $C_{DECOUPLE}$ is required at this pin.				
K1	PC0	ACMP0_CH0 DAC0_OUT0ALT #0/ OPAMP_OUT0ALT	EBI_A23 #0/1/2	TIM0_CC1 #4 PCNT0_S0IN #2	US0_TX #5 US1_TX #0 I2C0_SDA #4	LES_CH0 #0 PRS_CH2 #0
K2	PC1	ACMP0_CH1 DAC0_OUT0ALT #1/ OPAMP_OUT0ALT	EBI_A24 #0/1/2	TIM0_CC2 #4 PCNT0_S1IN #2	US0_RX #5 US1_RX #0 I2C0_SCL #4	LES_CH1 #0 PRS_CH3 #0

BGA120 Pin# and Name		Pin Alternate Functionality / Description				
Pin #	Pin Name	Analog	EBI	Timers	Communication	Other
K3	IOVDD_4	Digital IO power supply 4.				
K11	VSS	Ground.				
K12	VSS	Ground.				
K13	PD8	BU_VIN				CMU_CLK1 #1
L1	PC2	ACMP0_CH2 DAC0_OUT0ALT #2/ OPAMP_OUT0ALT	EBI_A25 #0/1/2	TIM0_CDTI0 #4	US2_TX #0	LES_CH2 #0
L2	PC3	ACMP0_CH3 DAC0_OUT0ALT #3/ OPAMP_OUT0ALT	EBI_NANDREn #0/1/2	TIM0_CDTI1 #4	US2_RX #0	LES_CH3 #0
L3	PA7	LCD_SEG35	EBI_CSTFT #0/1/2			
L4	IOVDD_5	Digital IO power supply 5.				
L5	VSS	Ground.				
L6	VSS	Ground.				
L7	IOVDD_6	Digital IO power supply 6.				
L8	PB9		EBI_A03 #0/1/2		U1_TX #2	
L9	PB10		EBI_A04 #0/1/2		U1_RX #2	
L10	PD0	ADC0_CH0 DAC0_OUT0ALT #4/ OPAMP_OUT0ALT OPAMP_OUT2 #1		PCNT2_S0IN #0	US1_TX #1	
L11	PD1	ADC0_CH1 DAC0_OUT1ALT #4/ OPAMP_OUT1ALT		TIM0_CC0 #3 PCNT2_S1IN #0	US1_RX #1	DBG_SWO #2
L12	PD4	ADC0_CH4 OPAMP_P2			LEU0_TX #0	ETM_TD2 #0/2
L13	PD7	ADC0_CH7 / DAC0_N1 / OPAMP_N1		TIM1_CC1 #4 LE-TIM0_OUT1 #0 PCNT0_S1IN #3	US1_TX #2 I2C0_SCL #1	CMU_CLK0 #2 LES_ALTEX1 #0 ACMP1_O #2 ETM_TCLK #0
M1	PB7	LFXTAL_P		TIM1_CC0 #3	US0_TX #4 US1_CLK #0	
M2	PC4	ACMP0_CH4 / DAC0_P0 / OPAMP_P0	EBI_A26 #0/1/2	TIM0_CDTI2 #4 LE-TIM0_OUT0 #3 PCNT1_S0IN #0	US2_CLK #0 I2C1_SDA #0	LES_CH4 #0
M3	PA8	LCD_SEG36	EBI_DCLK #0/1/2	TIM2_CC0 #0		
M4	PA10	LCD_SEG38	EBI_VSNC #0/1/2	TIM2_CC2 #0		
M5	PA13	LCD_BCAP_N	EBI_A01 #0/1/2	TIM2_CC1 #1		
M6	PA14	LCD_BEXT	EBI_A02 #0/1/2	TIM2_CC2 #1		

BGA120 Pin# and Name		Pin Alternate Functionality / Description				
Pin #	Pin Name	Analog	EBI	Timers	Communication	Other
M7	RESETn	Reset input, active low. To apply an external reset source to this pin, it is required to only drive this pin low during reset, and let the internal pull-up ensure that reset is released.				
M8	AVSS_1	Analog ground 1.				
M9	AVDD_2	Analog power supply 2.				
M10	AVDD_1	Analog power supply 1.				
M11	AVSS_0	Analog ground 0.				
M12	PD3	ADC0_CH3 OPAMP_N2		TIM0_CC2 #3	US1_CS #1	ETM_TD1 #0/2
M13	PD6	ADC0_CH6 / DAC0_P1 / OPAMP_P1		TIM1_CC0 #4 LE-TIM0_OUT0 #0 PCNT0_S0IN #3	US1_RX #2 I2C0_SDA #1	LES_ALTEX0 #0 ACMP0_O #2 ETM_TD0 #0
N1	PB8	LFXTAL_N		TIM1_CC1 #3	US0_RX #4 US1_CS #0	
N2	PC5	ACMP0_CH5 / DAC0_N0 / OPAMP_N0	EBI_NANDWEn #0/1/2	LETIM0_OUT1 #3 PCNT1_S1IN #0	US2_CS #0 I2C1_SCL #0	LES_CH5 #0
N3	PA9	LCD_SEG37	EBI_DTEN #0/1/2	TIM2_CC1 #0		
N4	PA11	LCD_SEG39	EBI_HSNC #0/1/2			
N5	PA12	LCD_BCAP_P	EBI_A00 #0/1/2	TIM2_CC0 #1		
N6	PB11	DAC0_OUT0 / OPAMP_OUT0		TIM1_CC2 #3 LE-TIM0_OUT0 #1	I2C1_SDA #1	
N7	PB12	DAC0_OUT1 / OPAMP_OUT1		LETIM0_OUT1 #1	I2C1_SCL #1	
N8	AVSS_2	Analog ground 2.				
N9	PB13	HFXTAL_P			US0_CLK #4/5 LEU0_TX #1	
N10	PB14	HFXTAL_N			US0_CS #4/5 LEU0_RX #1	
N11	AVDD_0	Analog power supply 0.				
N12	PD2	ADC0_CH2	EBI_A27 #0/1/2	TIM0_CC1 #3	US1_CLK #1	DBG_SWO #3
N13	PD5	ADC0_CH5 OPAMP_OUT2 #0			LEU0_RX #0	ETM_TD3 #0/2

5.16.2 Alternate Functionality Pinout

A wide selection of alternate functionality is available for multiplexing to various pins. This is shown in the following table. The table shows the name of the alternate functionality in the first column, followed by columns showing the possible LOCATION bitfield settings.

Note: Some functionality, such as analog interfaces, do not have alternate settings or a LOCATION bitfield. In these cases, the pinout is shown in the column corresponding to LOCATION 0.

Table 5.47. Alternate Functionality Overview

Alternate	LOCATION							
Functionality	0	1	2	3	4	5	6	Description
ACMP0_CH0	PC0							Analog comparator ACMP0, channel 0.
ACMP0_CH1	PC1							Analog comparator ACMP0, channel 1.
ACMP0_CH2	PC2							Analog comparator ACMP0, channel 2.
ACMP0_CH3	PC3							Analog comparator ACMP0, channel 3.
ACMP0_CH4	PC4							Analog comparator ACMP0, channel 4.
ACMP0_CH5	PC5							Analog comparator ACMP0, channel 5.
ACMP0_CH6	PC6							Analog comparator ACMP0, channel 6.
ACMP0_CH7	PC7							Analog comparator ACMP0, channel 7.
ACMP0_O	PE13	PE2	PD6					Analog comparator ACMP0, digital output.
ACMP1_CH0	PC8							Analog comparator ACMP1, channel 0.
ACMP1_CH1	PC9							Analog comparator ACMP1, channel 1.
ACMP1_CH2	PC10							Analog comparator ACMP1, channel 2.
ACMP1_CH3	PC11							Analog comparator ACMP1, channel 3.
ACMP1_CH4	PC12							Analog comparator ACMP1, channel 4.
ACMP1_CH5	PC13							Analog comparator ACMP1, channel 5.
ACMP1_CH6	PC14							Analog comparator ACMP1, channel 6.
ACMP1_CH7	PC15							Analog comparator ACMP1, channel 7.
ACMP1_O	PF2	PE3	PD7					Analog comparator ACMP1, digital output.
ADC0_CH0	PD0							Analog to digital converter ADC0, input channel number 0.
ADC0_CH1	PD1							Analog to digital converter ADC0, input channel number 1.
ADC0_CH2	PD2							Analog to digital converter ADC0, input channel number 2.
ADC0_CH3	PD3							Analog to digital converter ADC0, input channel number 3.
ADC0_CH4	PD4							Analog to digital converter ADC0, input channel number 4.
ADC0_CH5	PD5							Analog to digital converter ADC0, input channel number 5.
ADC0_CH6	PD6							Analog to digital converter ADC0, input channel number 6.

Alternate	LOCATION							
Functionality	0	1	2	3	4	5	6	Description
ADC0_CH7	PD7							Analog to digital converter ADC0, input channel number 7.
BOOT_RX	PE11							Bootloader RX.
BOOT_TX	PE10							Bootloader TX.
BU_STAT	PE3							Backup Power Domain status, whether or not the system is in backup mode
BU_VIN	PD8							Battery input for Backup Power Domain
BU_VOUT	PE2							Power output for Backup Power Domain
CMU_CLK0	PA2	PC12	PD7					Clock Management Unit, clock output number 0.
CMU_CLK1	PA1	PD8	PE12					Clock Management Unit, clock output number 1.
DAC0_OUT0 / OPAMP_OUT0	PB11							Digital to Analog Converter DAC0_OUT0 /OPAMP output channel number 0.
DAC0_OUT0ALT / OPAMP_OUT0ALT	PC0	PC1	PC2	PC3	PD0			Digital to Analog Converter DAC0_OUT0ALT / OPAMP alternative output for channel 0.
DAC0_OUT1 / OPAMP_OUT1	PB12							Digital to Analog Converter DAC0_OUT1 / OPAMP output channel number 1.
DAC0_OUT1ALT / OPAMP_OUT1ALT	PC12	PC13	PC14	PC15	PD1			Digital to Analog Converter DAC0_OUT1ALT / OPAMP alternative output for channel 1.
DBG_SWCLK	PF0	PF0	PF0	PF0				Debug-interface Serial Wire clock input. Note that this function is enabled to pin out of reset, and has a built-in pull down.
DBG_SWDIO	PF1	PF1	PF1	PF1				Debug-interface Serial Wire data input / output. Note that this function is enabled to pin out of reset, and has a built-in pull up.
DBG_SWO	PF2	PC15	PD1	PD2				Debug-interface Serial Wire viewer Output. Note that this function is not enabled after reset, and must be enabled by software to be used.
EBI_A00	PA12	PA12	PA12					External Bus Interface (EBI) address output pin 00.
EBI_A01	PA13	PA13	PA13					External Bus Interface (EBI) address output pin 01.
EBI_A02	PA14	PA14	PA14					External Bus Interface (EBI) address output pin 02.
EBI_A03	PB9	PB9	PB9					External Bus Interface (EBI) address output pin 03.
EBI_A04	PB10	PB10	PB10					External Bus Interface (EBI) address output pin 04.
EBI_A05	PC6	PC6	PC6					External Bus Interface (EBI) address output pin 05.
EBI_A06	PC7	PC7	PC7					External Bus Interface (EBI) address output pin 06.
EBI_A07	PE0	PE0	PE0					External Bus Interface (EBI) address output pin 07.
EBI_A08	PE1	PE1	PE1					External Bus Interface (EBI) address output pin 08.
EBI_A09	PE2	PC9	PC9					External Bus Interface (EBI) address output pin 09.
EBI_A10	PE3	PC10	PC10					External Bus Interface (EBI) address output pin 10.
EBI_A11	PE4	PE4	PE4					External Bus Interface (EBI) address output pin 11.
EBI_A12	PE5	PE5	PE5					External Bus Interface (EBI) address output pin 12.

Alternate	LOCATION							
Functionality	0	1	2	3	4	5	6	Description
EBI_A13	PE6	PE6	PE6					External Bus Interface (EBI) address output pin 13.
EBI_A14	PE7	PE7	PE7					External Bus Interface (EBI) address output pin 14.
EBI_A15	PC8	PC8	PC8					External Bus Interface (EBI) address output pin 15.
EBI_A16	PB0	PB0	PB0					External Bus Interface (EBI) address output pin 16.
EBI_A17	PB1	PB1	PB1					External Bus Interface (EBI) address output pin 17.
EBI_A18	PB2	PB2	PB2					External Bus Interface (EBI) address output pin 18.
EBI_A19	PB3	PB3	PB3					External Bus Interface (EBI) address output pin 19.
EBI_A20	PB4	PB4	PB4					External Bus Interface (EBI) address output pin 20.
EBI_A21	PB5	PB5	PB5					External Bus Interface (EBI) address output pin 21.
EBI_A22	PB6	PB6	PB6					External Bus Interface (EBI) address output pin 22.
EBI_A23	PC0	PC0	PC0					External Bus Interface (EBI) address output pin 23.
EBI_A24	PC1	PC1	PC1					External Bus Interface (EBI) address output pin 24.
EBI_A25	PC2	PC2	PC2					External Bus Interface (EBI) address output pin 25.
EBI_A26	PC4	PC4	PC4					External Bus Interface (EBI) address output pin 26.
EBI_A27	PD2	PD2	PD2					External Bus Interface (EBI) address output pin 27.
EBI_AD00	PE8	PE8	PE8					External Bus Interface (EBI) address and data input / output pin 00.
EBI_AD01	PE9	PE9	PE9					External Bus Interface (EBI) address and data input / output pin 01.
EBI_AD02	PE10	PE10	PE10					External Bus Interface (EBI) address and data input / output pin 02.
EBI_AD03	PE11	PE11	PE11					External Bus Interface (EBI) address and data input / output pin 03.
EBI_AD04	PE12	PE12	PE12					External Bus Interface (EBI) address and data input / output pin 04.
EBI_AD05	PE13	PE13	PE13					External Bus Interface (EBI) address and data input / output pin 05.
EBI_AD06	PE14	PE14	PE14					External Bus Interface (EBI) address and data input / output pin 06.
EBI_AD07	PE15	PE15	PE15					External Bus Interface (EBI) address and data input / output pin 07.
EBI_AD08	PA15	PA15	PA15					External Bus Interface (EBI) address and data input / output pin 08.
EBI_AD09	PA0	PA0	PA0					External Bus Interface (EBI) address and data input / output pin 09.
EBI_AD10	PA1	PA1	PA1					External Bus Interface (EBI) address and data input / output pin 10.
EBI_AD11	PA2	PA2	PA2					External Bus Interface (EBI) address and data input / output pin 11.
EBI_AD12	PA3	PA3	PA3					External Bus Interface (EBI) address and data input / output pin 12.

Alternate	LOCATION							
Functionality	0	1	2	3	4	5	6	Description
EBI_AD13	PA4	PA4	PA4					External Bus Interface (EBI) address and data input / output pin 13.
EBI_AD14	PA5	PA5	PA5					External Bus Interface (EBI) address and data input / output pin 14.
EBI_AD15	PA6	PA6	PA6					External Bus Interface (EBI) address and data input / output pin 15.
EBI_ALE	PF3	PC11	PC11					External Bus Interface (EBI) Address Latch Enable output.
EBI_ARDY	PF2	PF2	PF2					External Bus Interface (EBI) Hardware Ready Control input.
EBI_BL0	PF6	PF6	PF6					External Bus Interface (EBI) Byte Lane/Enable pin 0.
EBI_BL1	PF7	PF7	PF7					External Bus Interface (EBI) Byte Lane/Enable pin 1.
EBI_CS0	PD9	PD9	PD9					External Bus Interface (EBI) Chip Select output 0.
EBI_CS1	PD10	PD10	PD10					External Bus Interface (EBI) Chip Select output 1.
EBI_CS2	PD11	PD11	PD11					External Bus Interface (EBI) Chip Select output 2.
EBI_CS3	PD12	PD12	PD12					External Bus Interface (EBI) Chip Select output 3.
EBI_CSTFT	PA7	PA7	PA7					External Bus Interface (EBI) Chip Select output TFT.
EBI_DCLK	PA8	PA8	PA8					External Bus Interface (EBI) TFT Dot Clock pin.
EBI_DTEN	PA9	PA9	PA9					External Bus Interface (EBI) TFT Data Enable pin.
EBI_HSNC	PA11	PA11	PA11					External Bus Interface (EBI) TFT Horizontal Synchronization pin.
EBI_NANDREn	PC3	PC3	PC3					External Bus Interface (EBI) NAND Read Enable output.
EBI_NANDWEn	PC5	PC5	PC5					External Bus Interface (EBI) NAND Write Enable output.
EBI_REn	PF5	PF9	PF5					External Bus Interface (EBI) Read Enable output.
EBI_VSNC	PA10	PA10	PA10					External Bus Interface (EBI) TFT Vertical Synchronization pin.
EBI_WEn	PF4	PF8	PF4					External Bus Interface (EBI) Write Enable output.
ETM_TCLK	PD7	PF8	PC6	PA6				Embedded Trace Module ETM clock .
ETM_TD0	PD6	PF9	PC7	PA2				Embedded Trace Module ETM data 0.
ETM_TD1	PD3	PD13	PD3	PA3				Embedded Trace Module ETM data 1.
ETM_TD2	PD4	PB15	PD4	PA4				Embedded Trace Module ETM data 2.
ETM_TD3	PD5	PF3	PD5	PA5				Embedded Trace Module ETM data 3.
GPIO_EM4WU0	PA0							Pin can be used to wake the system up from EM4
GPIO_EM4WU1	PA6							Pin can be used to wake the system up from EM4
GPIO_EM4WU2	PC9							Pin can be used to wake the system up from EM4
GPIO_EM4WU3	PF1							Pin can be used to wake the system up from EM4

Alternate	LOCATION							
Functionality	0	1	2	3	4	5	6	Description
GPIO_EM4WU4	PF2							Pin can be used to wake the system up from EM4
GPIO_EM4WU5	PE13							Pin can be used to wake the system up from EM4
HFXTAL_N	PB14							High Frequency Crystal negative pin. Also used as external optional clock input pin.
HFXTAL_P	PB13							High Frequency Crystal positive pin.
I2C0_SCL	PA1	PD7	PC7	PD15	PC1	PF1	PE13	I2C0 Serial Clock Line input / output.
I2C0_SDA	PA0	PD6	PC6	PD14	PC0	PF0	PE12	I2C0 Serial Data input / output.
I2C1_SCL	PC5	PB12	PE1					I2C1 Serial Clock Line input / output.
I2C1_SDA	PC4	PB11	PE0					I2C1 Serial Data input / output.
LCD_BCAP_N	PA13							LCD voltage booster (optional), boost capacitor, negative pin. If using the LCD voltage booster, connect a 22 nF capacitor between LCD_BCAP_N and LCD_BCAP_P.
LCD_BCAP_P	PA12							LCD voltage booster (optional), boost capacitor, positive pin. If using the LCD voltage booster, connect a 22 nF capacitor between LCD_BCAP_N and LCD_BCAP_P.
LCD_BEXT	PA14							LCD voltage booster (optional), boost output. If using the LCD voltage booster, connect a 1 uF capacitor between this pin and VSS. An external LCD voltage may also be applied to this pin if the booster is not enabled. If AVDD is used directly as the LCD supply voltage, this pin may be left unconnected or used as a GPIO.
LCD_COM0	PE4							LCD driver common line number 0.
LCD_COM1	PE5							LCD driver common line number 1.
LCD_COM2	PE6							LCD driver common line number 2.
LCD_COM3	PE7							LCD driver common line number 3.
LCD_SEG0	PF2							LCD segment line 0. Segments 0, 1, 2 and 3 are controlled by SEGEN0.
LCD_SEG1	PF3							LCD segment line 1. Segments 0, 1, 2 and 3 are controlled by SEGEN0.
LCD_SEG2	PF4							LCD segment line 2. Segments 0, 1, 2 and 3 are controlled by SEGEN0.
LCD_SEG3	PF5							LCD segment line 3. Segments 0, 1, 2 and 3 are controlled by SEGEN0.
LCD_SEG4	PE8							LCD segment line 4. Segments 4, 5, 6 and 7 are controlled by SEGEN1.
LCD_SEG5	PE9							LCD segment line 5. Segments 4, 5, 6 and 7 are controlled by SEGEN1.
LCD_SEG6	PE10							LCD segment line 6. Segments 4, 5, 6 and 7 are controlled by SEGEN1.

Alternate	LOCATION							
Functionality	0	1	2	3	4	5	6	Description
LCD_SEG7	PE11							LCD segment line 7. Segments 4, 5, 6 and 7 are controlled by SEGEN1.
LCD_SEG8	PE12							LCD segment line 8. Segments 8, 9, 10 and 11 are controlled by SEGEN2.
LCD_SEG9	PE13							LCD segment line 9. Segments 8, 9, 10 and 11 are controlled by SEGEN2.
LCD_SEG10	PE14							LCD segment line 10. Segments 8, 9, 10 and 11 are controlled by SEGEN2.
LCD_SEG11	PE15							LCD segment line 11. Segments 8, 9, 10 and 11 are controlled by SEGEN2.
LCD_SEG12	PA15							LCD segment line 12. Segments 12, 13, 14 and 15 are controlled by SEGEN3.
LCD_SEG13	PA0							LCD segment line 13. Segments 12, 13, 14 and 15 are controlled by SEGEN3.
LCD_SEG14	PA1							LCD segment line 14. Segments 12, 13, 14 and 15 are controlled by SEGEN3.
LCD_SEG15	PA2							LCD segment line 15. Segments 12, 13, 14 and 15 are controlled by SEGEN3.
LCD_SEG16	PA3							LCD segment line 16. Segments 16, 17, 18 and 19 are controlled by SEGEN4.
LCD_SEG17	PA4							LCD segment line 17. Segments 16, 17, 18 and 19 are controlled by SEGEN4.
LCD_SEG18	PA5							LCD segment line 18. Segments 16, 17, 18 and 19 are controlled by SEGEN4.
LCD_SEG19	PA6							LCD segment line 19. Segments 16, 17, 18 and 19 are controlled by SEGEN4.
LCD_SEG20/ LCD_COM4	PB3							LCD segment line 20. Segments 20, 21, 22 and 23 are controlled by SEGEN5. This pin may also be used as LCD COM line 4
LCD_SEG21/ LCD_COM5	PB4							LCD segment line 21. Segments 20, 21, 22 and 23 are controlled by SEGEN5. This pin may also be used as LCD COM line 5
LCD_SEG22/ LCD_COM6	PB5							LCD segment line 22. Segments 20, 21, 22 and 23 are controlled by SEGEN5. This pin may also be used as LCD COM line 6
LCD_SEG23/ LCD_COM7	PB6							LCD segment line 23. Segments 20, 21, 22 and 23 are controlled by SEGEN5. This pin may also be used as LCD COM line 7
LCD_SEG24	PF6							LCD segment line 24. Segments 24, 25, 26 and 27 are controlled by SEGEN6.
LCD_SEG25	PF7							LCD segment line 25. Segments 24, 25, 26 and 27 are controlled by SEGEN6.
LCD_SEG26	PF8							LCD segment line 26. Segments 24, 25, 26 and 27 are controlled by SEGEN6.
LCD_SEG27	PF9							LCD segment line 27. Segments 24, 25, 26 and 27 are controlled by SEGEN6.

Alternate	LOCATION							
Functionality	0	1	2	3	4	5	6	Description
LCD_SEG28	PD9							LCD segment line 28. Segments 28, 29, 30 and 31 are controlled by SEGEN7.
LCD_SEG29	PD10							LCD segment line 29. Segments 28, 29, 30 and 31 are controlled by SEGEN7.
LCD_SEG30	PD11							LCD segment line 30. Segments 28, 29, 30 and 31 are controlled by SEGEN7.
LCD_SEG31	PD12							LCD segment line 31. Segments 28, 29, 30 and 31 are controlled by SEGEN7.
LCD_SEG32	PB0							LCD segment line 32. Segments 32, 33, 34 and 35 are controlled by SEGEN8.
LCD_SEG33	PB1							LCD segment line 33. Segments 32, 33, 34 and 35 are controlled by SEGEN8.
LCD_SEG34	PB2							LCD segment line 34. Segments 32, 33, 34 and 35 are controlled by SEGEN8.
LCD_SEG35	PA7							LCD segment line 35. Segments 32, 33, 34 and 35 are controlled by SEGEN8.
LCD_SEG36	PA8							LCD segment line 36. Segments 36, 37, 38 and 39 are controlled by SEGEN9.
LCD_SEG37	PA9							LCD segment line 37. Segments 36, 37, 38 and 39 are controlled by SEGEN9.
LCD_SEG38	PA10							LCD segment line 38. Segments 36, 37, 38 and 39 are controlled by SEGEN9.
LCD_SEG39	PA11							LCD segment line 39. Segments 36, 37, 38 and 39 are controlled by SEGEN9.
LES_ALTEX0	PD6							LESENSE alternate exite output 0.
LES_ALTEX1	PD7							LESENSE alternate exite output 1.
LES_ALTEX2	PA3							LESENSE alternate exite output 2.
LES_ALTEX3	PA4							LESENSE alternate exite output 3.
LES_ALTEX4	PA5							LESENSE alternate exite output 4.
LES_ALTEX5	PE11							LESENSE alternate exite output 5.
LES_ALTEX6	PE12							LESENSE alternate exite output 6.
LES_ALTEX7	PE13							LESENSE alternate exite output 7.
LES_CH0	PC0							LESENSE channel 0.
LES_CH1	PC1							LESENSE channel 1.
LES_CH2	PC2							LESENSE channel 2.
LES_CH3	PC3							LESENSE channel 3.
LES_CH4	PC4							LESENSE channel 4.
LES_CH5	PC5							LESENSE channel 5.
LES_CH6	PC6							LESENSE channel 6.
LES_CH7	PC7							LESENSE channel 7.
LES_CH8	PC8							LESENSE channel 8.

Alternate	LOCATION							
Functionality	0	1	2	3	4	5	6	Description
LES_CH9	PC9							LESENSE channel 9.
LES_CH10	PC10							LESENSE channel 10.
LES_CH11	PC11							LESENSE channel 11.
LES_CH12	PC12							LESENSE channel 12.
LES_CH13	PC13							LESENSE channel 13.
LES_CH14	PC14							LESENSE channel 14.
LES_CH15	PC15							LESENSE channel 15.
LETIM0_OUT0	PD6	PB11	PF0	PC4				Low Energy Timer LETIM0, output channel 0.
LETIM0_OUT1	PD7	PB12	PF1	PC5				Low Energy Timer LETIM0, output channel 1.
LEU0_RX	PD5	PB14	PE15	PF1	PA0			LEUART0 Receive input.
LEU0_TX	PD4	PB13	PE14	PF0	PF2			LEUART0 Transmit output. Also used as receive input in half duplex communication.
LEU1_RX	PC7	PA6						LEUART1 Receive input.
LEU1_TX	PC6	PA5						LEUART1 Transmit output. Also used as receive input in half duplex communication.
LFXTAL_N	PB8							Low Frequency Crystal (typically 32.768 kHz) negative pin. Also used as an optional external clock input pin.
LFXTAL_P	PB7							Low Frequency Crystal (typically 32.768 kHz) positive pin.
OPAMP_N0 / DAC0_N0	PC5							Operational Amplifier 0 external negative input.
OPAMP_N1 / DAC0_N1	PD7							Operational Amplifier 1 external negative input.
OPAMP_N2	PD3							Operational Amplifier 2 external negative input.
OPAMP_OUT2	PD5	PD0						Operational Amplifier 2 output.
OPAMP_P0 / DAC0_P0	PC4							Operational Amplifier 0 external positive input.
OPAMP_P1 / DAC0_P1	PD6							Operational Amplifier 1 external positive input.
OPAMP_P2	PD4							Operational Amplifier 2 external positive input.
PCNT0_S0IN	PC13	PE0	PC0	PD6				Pulse Counter PCNT0 input number 0.
PCNT0_S1IN	PC14	PE1	PC1	PD7				Pulse Counter PCNT0 input number 1.
PCNT1_S0IN	PC4	PB3						Pulse Counter PCNT1 input number 0.
PCNT1_S1IN	PC5	PB4						Pulse Counter PCNT1 input number 1.
PCNT2_S0IN	PD0	PE8						Pulse Counter PCNT2 input number 0.
PCNT2_S1IN	PD1	PE9						Pulse Counter PCNT2 input number 1.
PRS_CH0	PA0	PF3						Peripheral Reflex System PRS, channel 0.
PRS_CH1	PA1	PF4						Peripheral Reflex System PRS, channel 1.
PRS_CH2	PC0	PF5						Peripheral Reflex System PRS, channel 2.

Alternate	LOCATION							
Functionality	0	1	2	3	4	5	6	Description
PRS_CH3	PC1	PE8						Peripheral Reflex System PRS, channel 3.
TIM0_CC0	PA0	PA0	PF6	PD1	PA0	PF0		Timer 0 Capture Compare input / output channel 0.
TIM0_CC1	PA1	PA1	PF7	PD2	PC0	PF1		Timer 0 Capture Compare input / output channel 1.
TIM0_CC2	PA2	PA2	PF8	PD3	PC1	PF2		Timer 0 Capture Compare input / output channel 2.
TIM0_CDTI0	PA3	PC13	PF3	PC13	PC2	PF3		Timer 0 Complimentary Dead Time Insertion channel 0.
TIM0_CDTI1	PA4	PC14	PF4	PC14	PC3	PF4		Timer 0 Complimentary Dead Time Insertion channel 1.
TIM0_CDTI2	PA5	PC15	PF5	PC15	PC4	PF5		Timer 0 Complimentary Dead Time Insertion channel 2.
TIM1_CC0	PC13	PE10	PB0	PB7	PD6			Timer 1 Capture Compare input / output channel 0.
TIM1_CC1	PC14	PE11	PB1	PB8	PD7			Timer 1 Capture Compare input / output channel 1.
TIM1_CC2	PC15	PE12	PB2	PB11	PC13			Timer 1 Capture Compare input / output channel 2.
TIM2_CC0	PA8	PA12	PC8					Timer 2 Capture Compare input / output channel 0.
TIM2_CC1	PA9	PA13	PC9					Timer 2 Capture Compare input / output channel 1.
TIM2_CC2	PA10	PA14	PC10					Timer 2 Capture Compare input / output channel 2.
TIM3_CC0	PE14	PE0						Timer 3 Capture Compare input / output channel 0.
TIM3_CC1	PE15	PE1						Timer 3 Capture Compare input / output channel 1.
TIM3_CC2	PA15	PE2						Timer 3 Capture Compare input / output channel 2.
U0_RX	PF7	PE1	PA4	PC15				UART0 Receive input.
U0_TX	PF6	PE0	PA3	PC14				UART0 Transmit output. Also used as receive input in half duplex communication.
U1_RX	PC13	PF11	PB10	PE3				UART1 Receive input.
U1_TX	PC12	PF10	PB9	PE2				UART1 Transmit output. Also used as receive input in half duplex communication.
US0_CLK	PE12	PE5	PC9	PC15	PB13	PB13		USART0 clock input / output.
US0_CS	PE13	PE4	PC8	PC14	PB14	PB14		USART0 chip select input / output.
US0_RX	PE11	PE6	PC10	PE12	PB8	PC1		USART0 Asynchronous Receive. USART0 Synchronous mode Main Input / Secondary Output (MISO).
US0_TX	PE10	PE7	PC11	PE13	PB7	PC0		USART0 Asynchronous Transmit.Also used as receive input in half duplex communication. USART0 Synchronous mode Main Output / Secondary Input (MOSI).
US1_CLK	PB7	PD2	PF0					USART1 clock input / output.
US1_CS	PB8	PD3	PF1					USART1 chip select input / output.
US1_RX	PC1	PD1	PD6					USART1 Asynchronous Receive. USART1 Synchronous mode Main Input / Secondary Output (MISO).

Alternate	LOCATION							
Functionality	0	1	2	3	4	5	6	Description
US1_TX	PC0	PD0	PD7					USART1 Asynchronous Transmit.Also used as receive input in half duplex communication. USART1 Synchronous mode Main Output / Secondary Input (MOSI).
US2_CLK	PC4	PB5						USART2 clock input / output.
US2_CS	PC5	PB6						USART2 chip select input / output.
US2_RX	PC3	PB4						USART2 Asynchronous Receive. USART2 Synchronous mode Main Input / Secondary Output (MISO).
US2_TX	PC2	PB3						USART2 Asynchronous Transmit.Also used as receive input in half duplex communication. USART2 Synchronous mode Main Output / Secondary Input (MOSI).

5.16.3 GPIO Pinout Overview

The specific GPIO pins available in EFM32WG895 are shown in the following table. Each GPIO port is organized as 16-bit ports indicated by letters A through F, and the individual pin on this port is indicated by a number from 15 down to 0.

Table 5.48. GPIO Pinout

Port	Pin 15	Pin 14	Pin 13	Pin 12	Pin 11	Pin 10	Pin 9	Pin 8	Pin 7	Pin 6	Pin 5	Pin 4	Pin 3	Pin 2	Pin 1	Pin 0
Port A	PA15	PA14	PA13	PA12	PA11	PA10	PA9	PA8	PA7	PA6	PA5	PA4	PA3	PA2	PA1	PA0
Port B	PB15	PB14	PB13	PB12	PB11	PB10	PB9	PB8	PB7	PB6	PB5	PB4	PB3	PB2	PB1	PB0
Port C	PC15	PC14	PC13	PC12	PC11	PC10	PC9	PC8	PC7	PC6	PC5	PC4	PC3	PC2	PC1	PC0
Port D	PD15	PD14	PD13	PD12	PD11	PD10	PD9	PD8	PD7	PD6	PD5	PD4	PD3	PD2	PD1	PD0
Port E	PE15	PE14	PE13	PE12	PE11	PE10	PE9	PE8	PE7	PE6	PE5	PE4	PE3	PE2	PE1	PE0
Port F	—	—	—	PF12	PF11	PF10	PF9	PF8	PF7	PF6	PF5	PF4	PF3	PF2	PF1	PF0

5.16.4 Opamp Pinout Overview

The specific opamp terminals available in EFM32WG895 is shown in the following figure.

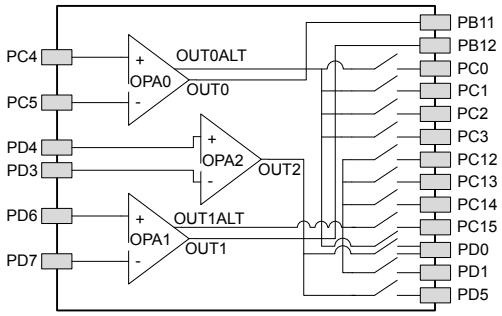

Figure 5.32. Opamp Pinout

5.17 EFM32WG900 (Wafer)

5.17.1 Padout

The EFM32WG900 padout is shown in the following figure and table. Alternate locations are denoted by "#" followed by the location number (Multiple locations on the same pad are split with "/"). Alternate locations can be configured in the LOCATION bitfield in the *_ROUTE register in the module in question.

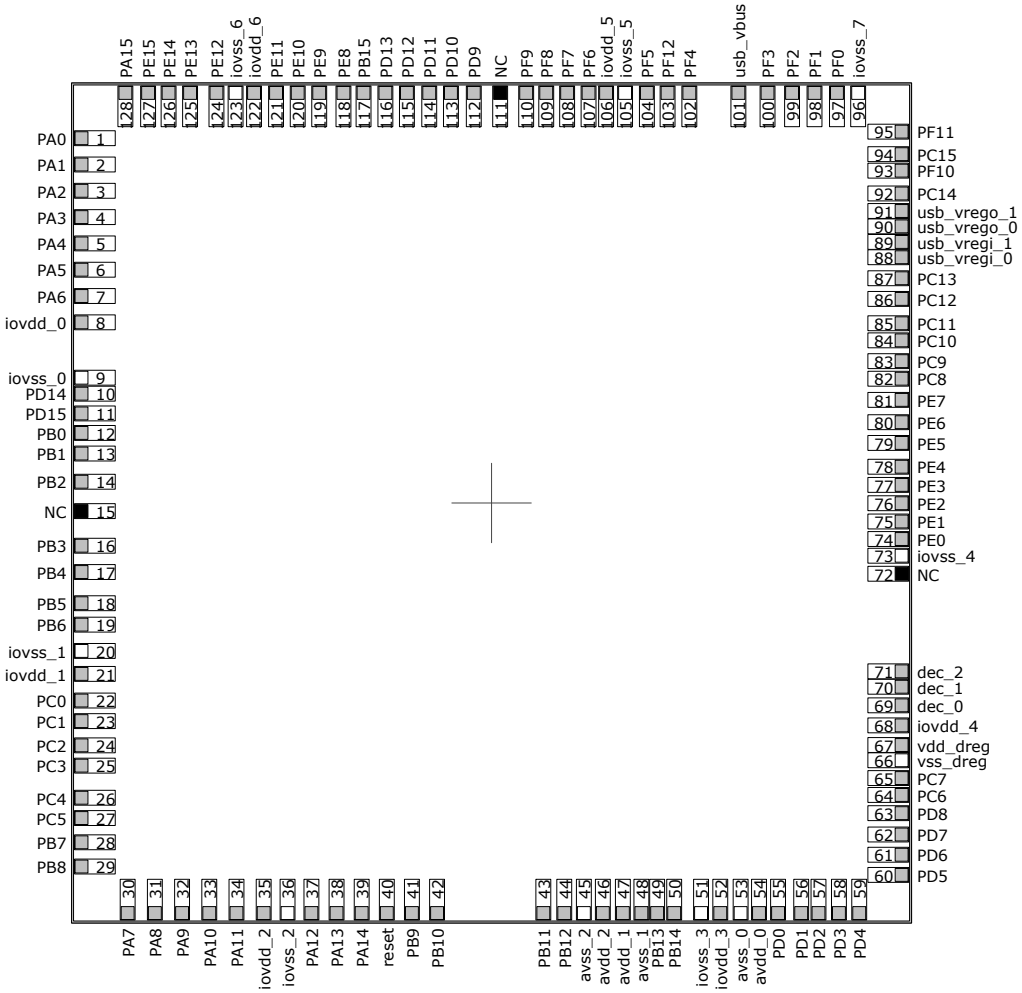

Figure 5.33. EFM32WG900 Padout (top view, not to scale)

Table 5.49. Device Padout

Water Pads		Pad Alternative Functionality / Description				
Pad #	Pad Name	Analog	EBI	Timers	Communication	Other
1	PA0	LCD_SEG13	EBI_AD09 #0/1/2	TIM0_CC0 #0/1/4	LEU0_RX #4 I2C0_SDA #0	PRS_CH0 #0 GPIO_EM4WU0
2	PA1	LCD_SEG14	EBI_AD10 #0/1/2	TIM0_CC1 #0/1	I2C0_SCL #0	CMU_CLK1 #0 PRS_CH1 #0
3	PA2	LCD_SEG15	EBI_AD11 #0/1/2	TIM0_CC2 #0/1		CMU_CLK0 #0 ETM_TD0 #3
4	PA3	LCD_SEG16	EBI_AD12 #0/1/2	TIM0_CDTI0 #0	U0_TX #2	LES_ALTEX2 #0 ETM_TD1 #3

Water Pads		Pad Alternative Functionality / Description				
Pad #	Pad Name	Analog	EBI	Timers	Communication	Other
5	PA4	LCD_SEG17	EBI_AD13 #0/1/2	TIM0_CDTI1 #0	U0_RX #2	LES_ALTEX3 #0 ETM_TD2 #3
6	PA5	LCD_SEG18	EBI_AD14 #0/1/2	TIM0_CDTI2 #0	LEU1_TX #1	LES_ALTEX4 #0 ETM_TD3 #3
7	PA6	LCD_SEG19	EBI_AD15 #0/1/2		LEU1_RX #1	ETM_TCLK #3 GPIO_EM4WU1
8	IOVDD_0	Digital IO power supply 0.				
9	IOVSS_0	Digital IO ground 0.				
10	PD14				I2C0_SDA #3	
11	PD15				I2C0_SCL #3	
12	PB0	LCD_SEG32	EBI_A16 #0/1/2	TIM1_CC0 #2		
13	PB1	LCD_SEG33	EBI_A17 #0/1/2	TIM1_CC1 #2		
14	PB2	LCD_SEG34	EBI_A18 #0/1/2	TIM1_CC2 #2		
15	NC	Do not connect.				
16	PB3	LCD_SEG20/ LCD_COM4	EBI_A19 #0/1/2	PCNT1_S0IN #1	US2_TX #1	
17	PB4	LCD_SEG21/ LCD_COM5	EBI_A20 #0/1/2	PCNT1_S1IN #1	US2_RX #1	
18	PB5	LCD_SEG22/ LCD_COM6	EBI_A21 #0/1/2		US2_CLK #1	
19	PB6	LCD_SEG23/ LCD_COM7	EBI_A22 #0/1/2		US2_CS #1	
20	IOVSS_1	Digital IO ground 1.				
21	IOVDD_1	Digital IO power supply 1.				
22	PC0	ACMP0_CH0 DAC0_OUT0ALT #0/ OPAMP_OUT0ALT	EBI_A23 #0/1/2	TIM0_CC1 #4 PCNT0_S0IN #2	US0_TX #5 US1_TX #0 I2C0_SDA #4	LES_CH0 #0 PRS_CH2 #0
23	PC1	ACMP0_CH1 DAC0_OUT0ALT #1/ OPAMP_OUT0ALT	EBI_A24 #0/1/2	TIM0_CC2 #4 PCNT0_S1IN #2	US0_RX #5 US1_RX #0 I2C0_SCL #4	LES_CH1 #0 PRS_CH3 #0
24	PC2	ACMP0_CH2 DAC0_OUT0ALT #2/ OPAMP_OUT0ALT	EBI_A25 #0/1/2	TIM0_CDTI0 #4	US2_TX #0	LES_CH2 #0
25	PC3	ACMP0_CH3 DAC0_OUT0ALT #3/ OPAMP_OUT0ALT	EBI_NANDREn #0/1/2	TIM0_CDTI1 #4	US2_RX #0	LES_CH3 #0
26	PC4	ACMP0_CH4 / DAC0_P0 / OPAMP_P0	EBI_A26 #0/1/2	TIM0_CDTI2 #4 LETIM0_OUT0 #3 PCNT1_S0IN #0	US2_CLK #0 I2C1_SDA #0	LES_CH4 #0

Water Pads		Pad Alternative Functionality / Description				
Pad #	Pad Name	Analog	EBI	Timers	Communication	Other
27	PC5	ACMP0_CH5 / DAC0_N0 / OPAMP_N0	EBI_NANDWEn #0/1/2	LETIM0_OUT1 #3 PCNT1_S1IN #0	US2_CS #0 I2C1_SCL #0	LES_CH5 #0
28	PB7	LFXTAL_P		TIM1_CC0 #3	US0_TX #4 US1_CLK #0	
29	PB8	LFXTAL_N		TIM1_CC1 #3	US0_RX #4 US1_CS #0	
30	PA7	LCD_SEG35	EBI_CSTFT #0/1/2			
31	PA8	LCD_SEG36	EBI_DCLK #0/1/2	TIM2_CC0 #0		
32	PA9	LCD_SEG37	EBI_DTEN #0/1/2	TIM2_CC1 #0		
33	PA10	LCD_SEG38	EBI_VSNC #0/1/2	TIM2_CC2 #0		
34	PA11	LCD_SEG39	EBI_HSNC #0/1/2			
35	IOVDD_2	Digital IO power supply 2.				
36	IOVSS_2	Digital IO ground 2.				
37	PA12	LCD_BCAP_P	EBI_A00 #0/1/2	TIM2_CC0 #1		
38	PA13	LCD_BCAP_N	EBI_A01 #0/1/2	TIM2_CC1 #1		
39	PA14	LCD_BEXT	EBI_A02 #0/1/2	TIM2_CC2 #1		
40	RESETn	Reset input, active low. To apply an external reset source to this pin, it is required to only drive this pin low during reset, and let the internal pull-up ensure that reset is released.				
41	PB9		EBI_A03 #0/1/2		U1_TX #2	
42	PB10		EBI_A04 #0/1/2		U1_RX #2	
43	PB11	DAC0_OUT0 / OPAMP_OUT0		TIM1_CC2 #3 LE-TIM0_OUT0 #1	I2C1_SDA #1	
44	PB12	DAC0_OUT1 / OPAMP_OUT1		LETIM0_OUT1 #1	I2C1_SCL #1	
45	AVSS_2	Analog ground 2.				
46	AVDD_2	Analog power supply 2.				
47	AVDD_1	Analog power supply 1.				
48	AVSS_1	Analog ground 1.				
49	PB13	HFXTAL_P			US0_CLK #4/5 LEU0_TX #1	
50	PB14	HFXTAL_N			US0_CS #4/5 LEU0_RX #1	
51	IOVSS_3	Digital IO ground 3.				
52	IOVDD_3	Digital IO power supply 3.				
53	AVSS_0	Analog ground 0.				
54	AVDD_0	Analog power supply 0.				

Water Pads		Pad Alternative Functionality / Description				
Pad #	Pad Name	Analog	EBI	Timers	Communication	Other
55	PD0	ADC0_CH0 DAC0_OUT0ALT #4/ OPAMP_OUT0ALT OPAMP_OUT2 #1		PCNT2_S0IN #0	US1_TX #1	
56	PD1	ADC0_CH1 DAC0_OUT1ALT #4/ OPAMP_OUT1ALT		TIM0_CC0 #3 PCNT2_S1IN #0	US1_RX #1	DBG_SWO #2
57	PD2	ADC0_CH2	EBI_A27 #0/1/2	TIM0_CC1 #3	USB_DMPU #0 US1_CLK #1	DBG_SWO #3
58	PD3	ADC0_CH3 OPAMP_N2		TIM0_CC2 #3	US1_CS #1	ETM_TD1 #0/2
59	PD4	ADC0_CH4 OPAMP_P2			LEU0_TX #0	ETM_TD2 #0/2
60	PD5	ADC0_CH5 OPAMP_OUT2 #0			LEU0_RX #0	ETM_TD3 #0/2
61	PD6	ADC0_CH6 / DAC0_P1 / OPAMP_P1		TIM1_CC0 #4 LE-TIM0_OUT0 #0 PCNT0_S0IN #3	US1_RX #2 I2C0_SDA #1	LES_ALTEX0 #0 ACMP0_O #2 ETM_TD0 #0
62	PD7	ADC0_CH7 / DAC0_N1 / OPAMP_N1		TIM1_CC1 #4 LE-TIM0_OUT1 #0 PCNT0_S1IN #3	US1_TX #2 I2C0_SCL #1	CMU_CLK0 #2 LES_ALTEX1 #0 ACMP1_O #2 ETM_TCLK #0
63	PD8	BU_VIN				CMU_CLK1 #1
64	PC6	ACMP0_CH6	EBI_A05 #0/1/2		LEU1_TX #0 I2C0_SDA #2	LES_CH6 #0 ETM_TCLK #2
65	PC7	ACMP0_CH7	EBI_A06 #0/1/2		LEU1_RX #0 I2C0_SCL #2	LES_CH7 #0 ETM_TD0 #2
66	VSS_DREG	Ground for on-chip voltage regulator.				
67	VDD_DREG	Power supply for on-chip voltage regulator.				
68	IOVDD_4	Digital IO power supply 4.				
69	DEC_0	Decouple output for on-chip voltage regulator.				
70	DEC_1	Decouple output for on-chip voltage regulator.				
71	DEC_2	Decouple output for on-chip voltage regulator.				
72	NC	Do not connect.				
73	IOVSS_4	Digital IO ground 4.				
74	PE0		EBI_A07 #0/1/2	TIM3_CC0 #1 PCNT0_S0IN #1	U0_TX #1 I2C1_SDA #2	
75	PE1		EBI_A08 #0/1/2	TIM3_CC1 #1 PCNT0_S1IN #1	U0_RX #1 I2C1_SCL #2	
76	PE2	BU_VOUT	EBI_A09 #0	TIM3_CC2 #1	U1_TX #3	ACMP0_O #1
77	PE3	BU_STAT	EBI_A10 #0		U1_RX #3	ACMP1_O #1
78	PE4	LCD_COM0	EBI_A11 #0/1/2		US0_CS #1	

Water Pads		Pad Alternative Functionality / Description				
Pad #	Pad Name	Analog	EBI	Timers	Communication	Other
79	PE5	LCD_COM1	EBI_A12 #0/1/2		US0_CLK #1	
80	PE6	LCD_COM2	EBI_A13 #0/1/2		US0_RX #1	
81	PE7	LCD_COM3	EBI_A14 #0/1/2		US0_TX #1	
82	PC8	ACMP1_CH0	EBI_A15 #0/1/2	TIM2_CC0 #2	US0_CS #2	LES_CH8 #0
83	PC9	ACMP1_CH1	EBI_A09 #1/2	TIM2_CC1 #2	US0_CLK #2	LES_CH9 #0 GPIO_EM4WU2
84	PC10	ACMP1_CH2	EBI_A10 #1/2	TIM2_CC2 #2	US0_RX #2	LES_CH10 #0
85	PC11	ACMP1_CH3	EBI_ALE #1/2		US0_TX #2	LES_CH11 #0
86	PC12	ACMP1_CH4 DAC0_OUT1ALT #0/ OPAMP_OUT1ALT			U1_TX #0	CMU_CLK0 #1 LES_CH12 #0
87	PC13	ACMP1_CH5 DAC0_OUT1ALT #1/ OPAMP_OUT1ALT		TIM0_CDTI0 #1/3 TIM1_CC0 #0 TIM1_CC2 #4 PCNT0_S0IN #0	U1_RX #0	LES_CH13 #0
88	USB_VREGI_0	Input to internal 3.3V USB regulator				
89	USB_VREGI_1	Input to internal 3.3V USB regulator				
90	USB_VREGO_0	Output and decoupling for internal 3.3V USB regulator				
91	USB_VREGO_1	Output and decoupling for internal 3.3V USB regulator				
92	PC14	ACMP1_CH6 DAC0_OUT1ALT #2/ OPAMP_OUT1ALT		TIM0_CDTI1 #1/3 TIM1_CC1 #0 PCNT0_S1IN #0	US0_CS #3 U0_TX #3	LES_CH14 #0
93	PF10				U1_TX #1 USB_DM	
94	PC15	ACMP1_CH7 DAC0_OUT1ALT #3/ OPAMP_OUT1ALT		TIM0_CDTI2 #1/3 TIM1_CC2 #0	US0_CLK #3 U0_RX #3	LES_CH15 #0 DBG_SWO #1
95	PF11				U1_RX #1 USB_DP	
96	IOVSS_7	Digital IO ground 7.				
97	PF0			TIM0_CC0 #5 LE-TIM0_OUT0 #2	US1_CLK #2 LEU0_TX #3 I2C0_SDA #5	DBG_SWCLK #0/1/2/3
98	PF1			TIM0_CC1 #5 LE-TIM0_OUT1 #2	US1_CS #2 LEU0_RX #3 I2C0_SCL #5	DBG_SWDIO #0/1/2/3 GPIO_EM4WU3
99	PF2	LCD_SEG0	EBI_ARDY #0/1/2	TIM0_CC2 #5	LEU0_TX #4	ACMP1_O #0 DBG_SWO #0 GPIO_EM4WU4
100	PF3	LCD_SEG1	EBI_ALE #0	TIM0_CDTI0 #2/5		PRS_CH0 #1 ETM_TD3 #1
101	USB_VBUS	USB 5.0 V VBUS input.				

Water Pads		Pad Alternative Functionality / Description				
Pad #	Pad Name	Analog	EBI	Timers	Communication	Other
102	PF4	LCD_SEG2	EBI_WEn #0/2	TIM0_CDTI1 #2/5		PRS_CH1 #1
103	PF12				USB_ID	
104	PF5	LCD_SEG3	EBI_REn #0/2	TIM0_CDTI2 #2/5	USB_VBUSEN #0	PRS_CH2 #1
105	IOVSS_5	Digital IO ground 5.				
106	IOVDD_5	Digital IO power supply 5.				
107	PF6	LCD_SEG24	EBI_BL0 #0/1/2	TIM0_CC0 #2	U0_TX #0	
108	PF7	LCD_SEG25	EBI_BL1 #0/1/2	TIM0_CC1 #2	U0_RX #0	
109	PF8	LCD_SEG26	EBI_WEn #1	TIM0_CC2 #2		ETM_TCLK #1
110	PF9	LCD_SEG27	EBI_REn #1			ETM_TD0 #1
111	NC	Do not connect.				
112	PD9	LCD_SEG28	EBI_CS0 #0/1/2			
113	PD10	LCD_SEG29	EBI_CS1 #0/1/2			
114	PD11	LCD_SEG30	EBI_CS2 #0/1/2			
115	PD12	LCD_SEG31	EBI_CS3 #0/1/2			
116	PD13					ETM_TD1 #1
117	PB15					ETM_TD2 #1
118	PE8	LCD_SEG4	EBI_AD00 #0/1/2	PCNT2_S0IN #1		PRS_CH3 #1
119	PE9	LCD_SEG5	EBI_AD01 #0/1/2	PCNT2_S1IN #1		
120	PE10	LCD_SEG6	EBI_AD02 #0/1/2	TIM1_CC0 #1	US0_TX #0	BOOT_TX
121	PE11	LCD_SEG7	EBI_AD03 #0/1/2	TIM1_CC1 #1	US0_RX #0	LES_ALTEX5 #0 BOOT_RX
122	IOVDD_6	Digital IO power supply 6.				
123	IOVSS_6	Digital IO ground 6.				
124	PE12	LCD_SEG8	EBI_AD04 #0/1/2	TIM1_CC2 #1	US0_RX #3 US0_CLK #0 I2C0_SDA #6	CMU_CLK1 #2 LES_ALTEX6 #0
125	PE13	LCD_SEG9	EBI_AD05 #0/1/2		US0_TX #3 US0_CS #0 I2C0_SCL #6	LES_ALTEX7 #0 ACMP0_O #0 GPIO_EM4WU5
126	PE14	LCD_SEG10	EBI_AD06 #0/1/2	TIM3_CC0 #0	LEU0_TX #2	
127	PE15	LCD_SEG11	EBI_AD07 #0/1/2	TIM3_CC1 #0	LEU0_RX #2	
128	PA15	LCD_SEG12	EBI_AD08 #0/1/2	TIM3_CC2 #0		

5.17.2 Alternate Functionality Padout

A wide selection of alternate functionality is available for multiplexing to various pads. This is shown in the following table. The table shows the name of the alternate functionality in the first column, followed by columns showing the possible LOCATION bitfield settings.

Note: Some functionality, such as analog interfaces, do not have alternate settings or a LOCATION bitfield. In these cases, the padout is shown in the column corresponding to LOCATION 0.

Table 5.50. Alternate Functionality Overview

Alternate	LOCATION							
Functionality	0	1	2	3	4	5	6	Description
ACMP0_CH0	PC0							Analog comparator ACMP0, channel 0.
ACMP0_CH1	PC1							Analog comparator ACMP0, channel 1.
ACMP0_CH2	PC2							Analog comparator ACMP0, channel 2.
ACMP0_CH3	PC3							Analog comparator ACMP0, channel 3.
ACMP0_CH4	PC4							Analog comparator ACMP0, channel 4.
ACMP0_CH5	PC5							Analog comparator ACMP0, channel 5.
ACMP0_CH6	PC6							Analog comparator ACMP0, channel 6.
ACMP0_CH7	PC7							Analog comparator ACMP0, channel 7.
ACMP0_O	PE13	PE2	PD6					Analog comparator ACMP0, digital output.
ACMP1_CH0	PC8							Analog comparator ACMP1, channel 0.
ACMP1_CH1	PC9							Analog comparator ACMP1, channel 1.
ACMP1_CH2	PC10							Analog comparator ACMP1, channel 2.
ACMP1_CH3	PC11							Analog comparator ACMP1, channel 3.
ACMP1_CH4	PC12							Analog comparator ACMP1, channel 4.
ACMP1_CH5	PC13							Analog comparator ACMP1, channel 5.
ACMP1_CH6	PC14							Analog comparator ACMP1, channel 6.
ACMP1_CH7	PC15							Analog comparator ACMP1, channel 7.
ACMP1_O	PF2	PE3	PD7					Analog comparator ACMP1, digital output.
ADC0_CH0	PD0							Analog to digital converter ADC0, input channel number 0.
ADC0_CH1	PD1							Analog to digital converter ADC0, input channel number 1.
ADC0_CH2	PD2							Analog to digital converter ADC0, input channel number 2.
ADC0_CH3	PD3							Analog to digital converter ADC0, input channel number 3.
ADC0_CH4	PD4							Analog to digital converter ADC0, input channel number 4.
ADC0_CH5	PD5							Analog to digital converter ADC0, input channel number 5.
ADC0_CH6	PD6							Analog to digital converter ADC0, input channel number 6.

Alternate	LOCATION							
Functionality	0	1	2	3	4	5	6	Description
ADC0_CH7	PD7							Analog to digital converter ADC0, input channel number 7.
BOOT_RX	PE11							Bootloader RX.
BOOT_TX	PE10							Bootloader TX.
BU_STAT	PE3							Backup Power Domain status, whether or not the system is in backup mode
BU_VIN	PD8							Battery input for Backup Power Domain
BU_VOUT	PE2							Power output for Backup Power Domain
CMU_CLK0	PA2	PC12	PD7					Clock Management Unit, clock output number 0.
CMU_CLK1	PA1	PD8	PE12					Clock Management Unit, clock output number 1.
DAC0_OUT0 / OPAMP_OUT0	PB11							Digital to Analog Converter DAC0_OUT0 / OPAMP output channel number 0.
DAC0_OUT0ALT / OPAMP_OUT0ALT	PC0	PC1	PC2	PC3	PD0			Digital to Analog Converter DAC0_OUT0ALT / OPAMP alternative output for channel 0.
DAC0_OUT1 / OPAMP_OUT1	PB12							Digital to Analog Converter DAC0_OUT1 / OPAMP output channel number 1.
DAC0_OUT1ALT / OPAMP_OUT1ALT	PC12	PC13	PC14	PC15	PD1			Digital to Analog Converter DAC0_OUT1ALT / OPAMP alternative output for channel 1.
DBG_SWCLK	PF0	PF0	PF0	PF0				Debug-interface Serial Wire clock input. Note that this function is enabled to pin out of reset, and has a built-in pull down.
DBG_SWDIO	PF1	PF1	PF1	PF1				Debug-interface Serial Wire data input / output. Note that this function is enabled to pin out of reset, and has a built-in pull up.
DBG_SWO	PF2	PC15	PD1	PD2				Debug-interface Serial Wire viewer Output. Note that this function is not enabled after reset, and must be enabled by software to be used.
EBI_A00	PA12	PA12	PA12					External Bus Interface (EBI) address output pin 00.
EBI_A01	PA13	PA13	PA13					External Bus Interface (EBI) address output pin 01.
EBI_A02	PA14	PA14	PA14					External Bus Interface (EBI) address output pin 02.
EBI_A03	PB9	PB9	PB9					External Bus Interface (EBI) address output pin 03.
EBI_A04	PB10	PB10	PB10					External Bus Interface (EBI) address output pin 04.
EBI_A05	PC6	PC6	PC6					External Bus Interface (EBI) address output pin 05.
EBI_A06	PC7	PC7	PC7					External Bus Interface (EBI) address output pin 06.
EBI_A07	PE0	PE0	PE0					External Bus Interface (EBI) address output pin 07.
EBI_A08	PE1	PE1	PE1					External Bus Interface (EBI) address output pin 08.
EBI_A09	PE2	PC9	PC9					External Bus Interface (EBI) address output pin 09.
EBI_A10	PE3	PC10	PC10					External Bus Interface (EBI) address output pin 10.
EBI_A11	PE4	PE4	PE4					External Bus Interface (EBI) address output pin 11.
EBI_A12	PE5	PE5	PE5					External Bus Interface (EBI) address output pin 12.

Alternate	LOCATION							
Functionality	0	1	2	3	4	5	6	Description
EBI_A13	PE6	PE6	PE6					External Bus Interface (EBI) address output pin 13.
EBI_A14	PE7	PE7	PE7					External Bus Interface (EBI) address output pin 14.
EBI_A15	PC8	PC8	PC8					External Bus Interface (EBI) address output pin 15.
EBI_A16	PB0	PB0	PB0					External Bus Interface (EBI) address output pin 16.
EBI_A17	PB1	PB1	PB1					External Bus Interface (EBI) address output pin 17.
EBI_A18	PB2	PB2	PB2					External Bus Interface (EBI) address output pin 18.
EBI_A19	PB3	PB3	PB3					External Bus Interface (EBI) address output pin 19.
EBI_A20	PB4	PB4	PB4					External Bus Interface (EBI) address output pin 20.
EBI_A21	PB5	PB5	PB5					External Bus Interface (EBI) address output pin 21.
EBI_A22	PB6	PB6	PB6					External Bus Interface (EBI) address output pin 22.
EBI_A23	PC0	PC0	PC0					External Bus Interface (EBI) address output pin 23.
EBI_A24	PC1	PC1	PC1					External Bus Interface (EBI) address output pin 24.
EBI_A25	PC2	PC2	PC2					External Bus Interface (EBI) address output pin 25.
EBI_A26	PC4	PC4	PC4					External Bus Interface (EBI) address output pin 26.
EBI_A27	PD2	PD2	PD2					External Bus Interface (EBI) address output pin 27.
EBI_AD00	PE8	PE8	PE8					External Bus Interface (EBI) address and data input / output pin 00.
EBI_AD01	PE9	PE9	PE9					External Bus Interface (EBI) address and data input / output pin 01.
EBI_AD02	PE10	PE10	PE10					External Bus Interface (EBI) address and data input / output pin 02.
EBI_AD03	PE11	PE11	PE11					External Bus Interface (EBI) address and data input / output pin 03.
EBI_AD04	PE12	PE12	PE12					External Bus Interface (EBI) address and data input / output pin 04.
EBI_AD05	PE13	PE13	PE13					External Bus Interface (EBI) address and data input / output pin 05.
EBI_AD06	PE14	PE14	PE14					External Bus Interface (EBI) address and data input / output pin 06.
EBI_AD07	PE15	PE15	PE15					External Bus Interface (EBI) address and data input / output pin 07.
EBI_AD08	PA15	PA15	PA15					External Bus Interface (EBI) address and data input / output pin 08.
EBI_AD09	PA0	PA0	PA0					External Bus Interface (EBI) address and data input / output pin 09.
EBI_AD10	PA1	PA1	PA1					External Bus Interface (EBI) address and data input / output pin 10.
EBI_AD11	PA2	PA2	PA2					External Bus Interface (EBI) address and data input / output pin 11.
EBI_AD12	PA3	PA3	PA3					External Bus Interface (EBI) address and data input / output pin 12.

Alternate	LOCATION							
Functionality	0	1	2	3	4	5	6	Description
EBI_AD13	PA4	PA4	PA4					External Bus Interface (EBI) address and data input / output pin 13.
EBI_AD14	PA5	PA5	PA5					External Bus Interface (EBI) address and data input / output pin 14.
EBI_AD15	PA6	PA6	PA6					External Bus Interface (EBI) address and data input / output pin 15.
EBI_ALE	PF3	PC11	PC11					External Bus Interface (EBI) Address Latch Enable output.
EBI_ARDY	PF2	PF2	PF2					External Bus Interface (EBI) Hardware Ready Control input.
EBI_BL0	PF6	PF6	PF6					External Bus Interface (EBI) Byte Lane/Enable pin 0.
EBI_BL1	PF7	PF7	PF7					External Bus Interface (EBI) Byte Lane/Enable pin 1.
EBI_CS0	PD9	PD9	PD9					External Bus Interface (EBI) Chip Select output 0.
EBI_CS1	PD10	PD10	PD10					External Bus Interface (EBI) Chip Select output 1.
EBI_CS2	PD11	PD11	PD11					External Bus Interface (EBI) Chip Select output 2.
EBI_CS3	PD12	PD12	PD12					External Bus Interface (EBI) Chip Select output 3.
EBI_CSTFT	PA7	PA7	PA7					External Bus Interface (EBI) Chip Select output TFT.
EBI_DCLK	PA8	PA8	PA8					External Bus Interface (EBI) TFT Dot Clock pin.
EBI_DTEN	PA9	PA9	PA9					External Bus Interface (EBI) TFT Data Enable pin.
EBI_HSNC	PA11	PA11	PA11					External Bus Interface (EBI) TFT Horizontal Synchronization pin.
EBI_NANDREn	PC3	PC3	PC3					External Bus Interface (EBI) NAND Read Enable output.
EBI_NANDWEn	PC5	PC5	PC5					External Bus Interface (EBI) NAND Write Enable output.
EBI_REn	PF5	PF9	PF5					External Bus Interface (EBI) Read Enable output.
EBI_VSNC	PA10	PA10	PA10					External Bus Interface (EBI) TFT Vertical Synchronization pin.
EBI_WEn	PF4	PF8	PF4					External Bus Interface (EBI) Write Enable output.
ETM_TCLK	PD7	PF8	PC6	PA6				Embedded Trace Module ETM clock .
ETM_TD0	PD6	PF9	PC7	PA2				Embedded Trace Module ETM data 0.
ETM_TD1	PD3	PD13	PD3	PA3				Embedded Trace Module ETM data 1.
ETM_TD2	PD4	PB15	PD4	PA4				Embedded Trace Module ETM data 2.
ETM_TD3	PD5	PF3	PD5	PA5				Embedded Trace Module ETM data 3.
GPIO_EM4WU0	PA0							Pin can be used to wake the system up from EM4
GPIO_EM4WU1	PA6							Pin can be used to wake the system up from EM4
GPIO_EM4WU2	PC9							Pin can be used to wake the system up from EM4
GPIO_EM4WU3	PF1							Pin can be used to wake the system up from EM4

Alternate	LOCATION							
Functionality	0	1	2	3	4	5	6	Description
GPIO_EM4WU4	PF2							Pin can be used to wake the system up from EM4
GPIO_EM4WU5	PE13							Pin can be used to wake the system up from EM4
HFXTAL_N	PB14							High Frequency Crystal negative pin. Also used as external optional clock input pin.
HFXTAL_P	PB13							High Frequency Crystal positive pin.
I2C0_SCL	PA1	PD7	PC7	PD15	PC1	PF1	PE13	I2C0 Serial Clock Line input / output.
I2C0_SDA	PA0	PD6	PC6	PD14	PC0	PF0	PE12	I2C0 Serial Data input / output.
I2C1_SCL	PC5	PB12	PE1					I2C1 Serial Clock Line input / output.
I2C1_SDA	PC4	PB11	PE0					I2C1 Serial Data input / output.
LCD_BCAP_N	PA13							LCD voltage booster (optional), boost capacitor, negative pin. If using the LCD voltage booster, connect a 22 nF capacitor between LCD_BCAP_N and LCD_BCAP_P.
LCD_BCAP_P	PA12							LCD voltage booster (optional), boost capacitor, positive pin. If using the LCD voltage booster, connect a 22 nF capacitor between LCD_BCAP_N and LCD_BCAP_P.
LCD_BEXT	PA14							LCD voltage booster (optional), boost output. If using the LCD voltage booster, connect a 1 uF capacitor between this pin and VSS. An external LCD voltage may also be applied to this pin if the booster is not enabled. If AVDD is used directly as the LCD supply voltage, this pin may be left unconnected or used as a GPIO.
LCD_COM0	PE4							LCD driver common line number 0.
LCD_COM1	PE5							LCD driver common line number 1.
LCD_COM2	PE6							LCD driver common line number 2.
LCD_COM3	PE7							LCD driver common line number 3.
LCD_SEG0	PF2							LCD segment line 0. Segments 0, 1, 2 and 3 are controlled by SEGEN0.
LCD_SEG1	PF3							LCD segment line 1. Segments 0, 1, 2 and 3 are controlled by SEGEN0.
LCD_SEG2	PF4							LCD segment line 2. Segments 0, 1, 2 and 3 are controlled by SEGEN0.
LCD_SEG3	PF5							LCD segment line 3. Segments 0, 1, 2 and 3 are controlled by SEGEN0.
LCD_SEG4	PE8							LCD segment line 4. Segments 4, 5, 6 and 7 are controlled by SEGEN1.
LCD_SEG5	PE9							LCD segment line 5. Segments 4, 5, 6 and 7 are controlled by SEGEN1.
LCD_SEG6	PE10							LCD segment line 6. Segments 4, 5, 6 and 7 are controlled by SEGEN1.

Alternate	LOCATION							
Functionality	0	1	2	3	4	5	6	Description
LCD_SEG7	PE11							LCD segment line 7. Segments 4, 5, 6 and 7 are controlled by SEGEN1.
LCD_SEG8	PE12							LCD segment line 8. Segments 8, 9, 10 and 11 are controlled by SEGEN2.
LCD_SEG9	PE13							LCD segment line 9. Segments 8, 9, 10 and 11 are controlled by SEGEN2.
LCD_SEG10	PE14							LCD segment line 10. Segments 8, 9, 10 and 11 are controlled by SEGEN2.
LCD_SEG11	PE15							LCD segment line 11. Segments 8, 9, 10 and 11 are controlled by SEGEN2.
LCD_SEG12	PA15							LCD segment line 12. Segments 12, 13, 14 and 15 are controlled by SEGEN3.
LCD_SEG13	PA0							LCD segment line 13. Segments 12, 13, 14 and 15 are controlled by SEGEN3.
LCD_SEG14	PA1							LCD segment line 14. Segments 12, 13, 14 and 15 are controlled by SEGEN3.
LCD_SEG15	PA2							LCD segment line 15. Segments 12, 13, 14 and 15 are controlled by SEGEN3.
LCD_SEG16	PA3							LCD segment line 16. Segments 16, 17, 18 and 19 are controlled by SEGEN4.
LCD_SEG17	PA4							LCD segment line 17. Segments 16, 17, 18 and 19 are controlled by SEGEN4.
LCD_SEG18	PA5							LCD segment line 18. Segments 16, 17, 18 and 19 are controlled by SEGEN4.
LCD_SEG19	PA6							LCD segment line 19. Segments 16, 17, 18 and 19 are controlled by SEGEN4.
LCD_SEG20/ LCD_COM4	PB3							LCD segment line 20. Segments 20, 21, 22 and 23 are controlled by SEGEN5. This pin may also be used as LCD COM line 4
LCD_SEG21/ LCD_COM5	PB4							LCD segment line 21. Segments 20, 21, 22 and 23 are controlled by SEGEN5. This pin may also be used as LCD COM line 5
LCD_SEG22/ LCD_COM6	PB5							LCD segment line 22. Segments 20, 21, 22 and 23 are controlled by SEGEN5. This pin may also be used as LCD COM line 6
LCD_SEG23/ LCD_COM7	PB6							LCD segment line 23. Segments 20, 21, 22 and 23 are controlled by SEGEN5. This pin may also be used as LCD COM line 7
LCD_SEG24	PF6							LCD segment line 24. Segments 24, 25, 26 and 27 are controlled by SEGEN6.
LCD_SEG25	PF7							LCD segment line 25. Segments 24, 25, 26 and 27 are controlled by SEGEN6.
LCD_SEG26	PF8							LCD segment line 26. Segments 24, 25, 26 and 27 are controlled by SEGEN6.
LCD_SEG27	PF9							LCD segment line 27. Segments 24, 25, 26 and 27 are controlled by SEGEN6.

Alternate	LOCATION							
Functionality	0	1	2	3	4	5	6	Description
LCD_SEG28	PD9							LCD segment line 28. Segments 28, 29, 30 and 31 are controlled by SEGEN7.
LCD_SEG29	PD10							LCD segment line 29. Segments 28, 29, 30 and 31 are controlled by SEGEN7.
LCD_SEG30	PD11							LCD segment line 30. Segments 28, 29, 30 and 31 are controlled by SEGEN7.
LCD_SEG31	PD12							LCD segment line 31. Segments 28, 29, 30 and 31 are controlled by SEGEN7.
LCD_SEG32	PB0							LCD segment line 32. Segments 32, 33, 34 and 35 are controlled by SEGEN8.
LCD_SEG33	PB1							LCD segment line 33. Segments 32, 33, 34 and 35 are controlled by SEGEN8.
LCD_SEG34	PB2							LCD segment line 34. Segments 32, 33, 34 and 35 are controlled by SEGEN8.
LCD_SEG35	PA7							LCD segment line 35. Segments 32, 33, 34 and 35 are controlled by SEGEN8.
LCD_SEG36	PA8							LCD segment line 36. Segments 36, 37, 38 and 39 are controlled by SEGEN9.
LCD_SEG37	PA9							LCD segment line 37. Segments 36, 37, 38 and 39 are controlled by SEGEN9.
LCD_SEG38	PA10							LCD segment line 38. Segments 36, 37, 38 and 39 are controlled by SEGEN9.
LCD_SEG39	PA11							LCD segment line 39. Segments 36, 37, 38 and 39 are controlled by SEGEN9.
LES_ALTEX0	PD6							LESENSE alternate exite output 0.
LES_ALTEX1	PD7							LESENSE alternate exite output 1.
LES_ALTEX2	PA3							LESENSE alternate exite output 2.
LES_ALTEX3	PA4							LESENSE alternate exite output 3.
LES_ALTEX4	PA5							LESENSE alternate exite output 4.
LES_ALTEX5	PE11							LESENSE alternate exite output 5.
LES_ALTEX6	PE12							LESENSE alternate exite output 6.
LES_ALTEX7	PE13							LESENSE alternate exite output 7.
LES_CH0	PC0							LESENSE channel 0.
LES_CH1	PC1							LESENSE channel 1.
LES_CH2	PC2							LESENSE channel 2.
LES_CH3	PC3							LESENSE channel 3.
LES_CH4	PC4							LESENSE channel 4.
LES_CH5	PC5							LESENSE channel 5.
LES_CH6	PC6							LESENSE channel 6.
LES_CH7	PC7							LESENSE channel 7.
LES_CH8	PC8							LESENSE channel 8.

Alternate	LOCATION							
Functionality	0	1	2	3	4	5	6	Description
LES_CH9	PC9							LESENSE channel 9.
LES_CH10	PC10							LESENSE channel 10.
LES_CH11	PC11							LESENSE channel 11.
LES_CH12	PC12							LESENSE channel 12.
LES_CH13	PC13							LESENSE channel 13.
LES_CH14	PC14							LESENSE channel 14.
LES_CH15	PC15							LESENSE channel 15.
LETIM0_OUT0	PD6	PB11	PF0	PC4				Low Energy Timer LETIM0, output channel 0.
LETIM0_OUT1	PD7	PB12	PF1	PC5				Low Energy Timer LETIM0, output channel 1.
LEU0_RX	PD5	PB14	PE15	PF1	PA0			LEUART0 Receive input.
LEU0_TX	PD4	PB13	PE14	PF0	PF2			LEUART0 Transmit output. Also used as receive input in half duplex communication.
LEU1_RX	PC7	PA6						LEUART1 Receive input.
LEU1_TX	PC6	PA5						LEUART1 Transmit output. Also used as receive input in half duplex communication.
LFXTAL_N	PB8							Low Frequency Crystal (typically 32.768 kHz) negative pin. Also used as an optional external clock input pin.
LFXTAL_P	PB7							Low Frequency Crystal (typically 32.768 kHz) positive pin.
OPAMP_N0 / DAC0_N0	PC5							Operational Amplifier 0 external negative input.
OPAMP_N1 / DAC0_N1	PD7							Operational Amplifier 1 external negative input.
OPAMP_N2	PD3							Operational Amplifier 2 external negative input.
OPAMP_OUT2	PD5	PD0						Operational Amplifier 2 output.
OPAMP_P0 / DAC0_P0	PC4							Operational Amplifier 0 external positive input.
OPAMP_P1 / DAC0_P1	PD6							Operational Amplifier 1 external positive input.
OPAMP_P2	PD4							Operational Amplifier 2 external positive input.
PCNT0_S0IN	PC13	PE0	PC0	PD6				Pulse Counter PCNT0 input number 0.
PCNT0_S1IN	PC14	PE1	PC1	PD7				Pulse Counter PCNT0 input number 1.
PCNT1_S0IN	PC4	PB3						Pulse Counter PCNT1 input number 0.
PCNT1_S1IN	PC5	PB4						Pulse Counter PCNT1 input number 1.
PCNT2_S0IN	PD0	PE8						Pulse Counter PCNT2 input number 0.
PCNT2_S1IN	PD1	PE9						Pulse Counter PCNT2 input number 1.
PRS_CH0	PA0	PF3						Peripheral Reflex System PRS, channel 0.
PRS_CH1	PA1	PF4						Peripheral Reflex System PRS, channel 1.
PRS_CH2	PC0	PF5						Peripheral Reflex System PRS, channel 2.

Alternate	LOCATION							
Functionality	0	1	2	3	4	5	6	Description
PRS_CH3	PC1	PE8						Peripheral Reflex System PRS, channel 3.
TIM0_CC0	PA0	PA0	PF6	PD1	PA0	PF0		Timer 0 Capture Compare input / output channel 0.
TIM0_CC1	PA1	PA1	PF7	PD2	PC0	PF1		Timer 0 Capture Compare input / output channel 1.
TIM0_CC2	PA2	PA2	PF8	PD3	PC1	PF2		Timer 0 Capture Compare input / output channel 2.
TIM0_CDTI0	PA3	PC13	PF3	PC13	PC2	PF3		Timer 0 Complimentary Deat Time Insertion channel 0.
TIM0_CDTI1	PA4	PC14	PF4	PC14	PC3	PF4		Timer 0 Complimentary Deat Time Insertion channel 1.
TIM0_CDTI2	PA5	PC15	PF5	PC15	PC4	PF5		Timer 0 Complimentary Deat Time Insertion channel 2.
TIM1_CC0	PC13	PE10	PB0	PB7	PD6			Timer 1 Capture Compare input / output channel 0.
TIM1_CC1	PC14	PE11	PB1	PB8	PD7			Timer 1 Capture Compare input / output channel 1.
TIM1_CC2	PC15	PE12	PB2	PB11	PC13			Timer 1 Capture Compare input / output channel 2.
TIM2_CC0	PA8	PA12	PC8					Timer 2 Capture Compare input / output channel 0.
TIM2_CC1	PA9	PA13	PC9					Timer 2 Capture Compare input / output channel 1.
TIM2_CC2	PA10	PA14	PC10					Timer 2 Capture Compare input / output channel 2.
TIM3_CC0	PE14	PE0						Timer 3 Capture Compare input / output channel 0.
TIM3_CC1	PE15	PE1						Timer 3 Capture Compare input / output channel 1.
TIM3_CC2	PA15	PE2						Timer 3 Capture Compare input / output channel 2.
U0_RX	PF7	PE1	PA4	PC15				UART0 Receive input.
U0_TX	PF6	PE0	PA3	PC14				UART0 Transmit output. Also used as receive input in half duplex communication.
U1_RX	PC13	PF11	PB10	PE3				UART1 Receive input.
U1_TX	PC12	PF10	PB9	PE2				UART1 Transmit output. Also used as receive input in half duplex communication.
US0_CLK	PE12	PE5	PC9	PC15	PB13	PB13		USART0 clock input / output.
US0_CS	PE13	PE4	PC8	PC14	PB14	PB14		USART0 chip select input / output.
US0_RX	PE11	PE6	PC10	PE12	PB8	PC1		USART0 Asynchronous Receive. USART0 Synchronous mode Main Input / Secondary Output (MISO).
US0_TX	PE10	PE7	PC11	PE13	PB7	PC0		USART0 Asynchronous Transmit.Also used as receive input in half duplex communication. USART0 Synchronous mode Main Output / Secondary Input (MOSI).
US1_CLK	PB7	PD2	PF0					USART1 clock input / output.
US1_CS	PB8	PD3	PF1					USART1 chip select input / output.
US1_RX	PC1	PD1	PD6					USART1 Asynchronous Receive. USART1 Synchronous mode Main Input / Secondary Output (MISO).

Alternate	LOCATION							
Functionality	0	1	2	3	4	5	6	Description
US1_TX	PC0	PD0	PD7					USART1 Asynchronous Transmit.Also used as receive input in half duplex communication. USART1 Synchronous mode Main Output / Secondary Input (MOSI).
US2_CLK	PC4	PB5						USART2 clock input / output.
US2_CS	PC5	PB6						USART2 chip select input / output.
US2_RX	PC3	PB4						USART2 Asynchronous Receive. USART2 Synchronous mode Main Input / Secondary Output (MISO).
US2_TX	PC2	PB3						USART2 Asynchronous Transmit.Also used as receive input in half duplex communication. USART2 Synchronous mode Main Output / Secondary Input (MOSI).
USB_DM	PF10							USB D- pin.
USB_DMPU	PD2							USB D- Pullup control.
USB_DP	PF11							USB D+ pin.
USB_ID	PF12							USB ID pin. Used in OTG mode.
USB_VBUS	USB_VBUS							USB 5 V VBUS input.
USB_VBUSEN	PF5							USB 5 V VBUS enable.
USB_VREGI	USB_VREGI							USB Input to internal 3.3 V regulator
USB_VREGO	USB_VREGO							USB Decoupling for internal 3.3 V USB regulator and regulator output

5.17.3 GPIO Pinout Overview

The specific GPIO pins available in EFM32WG900 are shown in the following table. Each GPIO port is organized as 16-bit ports indicated by letters A through F, and the individual pin on this port is indicated by a number from 15 down to 0.

Table 5.51. GPIO Pinout

Port	Pin 15	Pin 14	Pin 13	Pin 12	Pin 11	Pin 10	Pin 9	Pin 8	Pin 7	Pin 6	Pin 5	Pin 4	Pin 3	Pin 2	Pin 1	Pin 0
Port A	PA15	PA14	PA13	PA12	PA11	PA10	PA9	PA8	PA7	PA6	PA5	PA4	PA3	PA2	PA1	PA0
Port B	PB15	PB14	PB13	PB12	PB11	PB10	PB9	PB8	PB7	PB6	PB5	PB4	PB3	PB2	PB1	PB0
Port C	PC15	PC14	PC13	PC12	PC11	PC10	PC9	PC8	PC7	PC6	PC5	PC4	PC3	PC2	PC1	PC0
Port D	PD15	PD14	PD13	PD12	PD11	PD10	PD9	PD8	PD7	PD6	PD5	PD4	PD3	PD2	PD1	PD0
Port E	PE15	PE14	PE13	PE12	PE11	PE10	PE9	PE8	PE7	PE6	PE5	PE4	PE3	PE2	PE1	PE0
Port F	—	—	—	PF12	PF11	PF10	PF9	PF8	PF7	PF6	PF5	PF4	PF3	PF2	PF1	PF0

5.17.4 Opamp Pinout Overview

The specific opamp terminals available in EFM32WG900 is shown in the following figure.

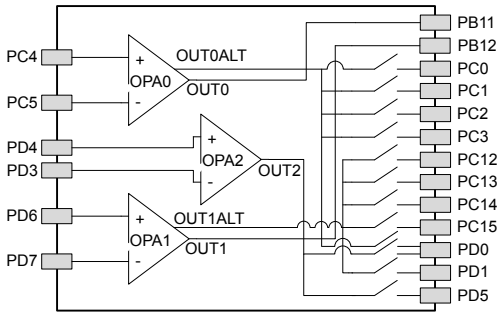

Figure 5.34. Opamp Pinout

5.18 EFM32WG940 (QFN64)

5.18.1 Pinout

The EFM32WG940 pinout is shown in the following figure and table. Alternate locations are denoted by "#" followed by the location number (Multiple locations on the same pin are split with "/"). Alternate locations can be configured in the LOCATION bitfield in the *_ROUTE register in the module in question.

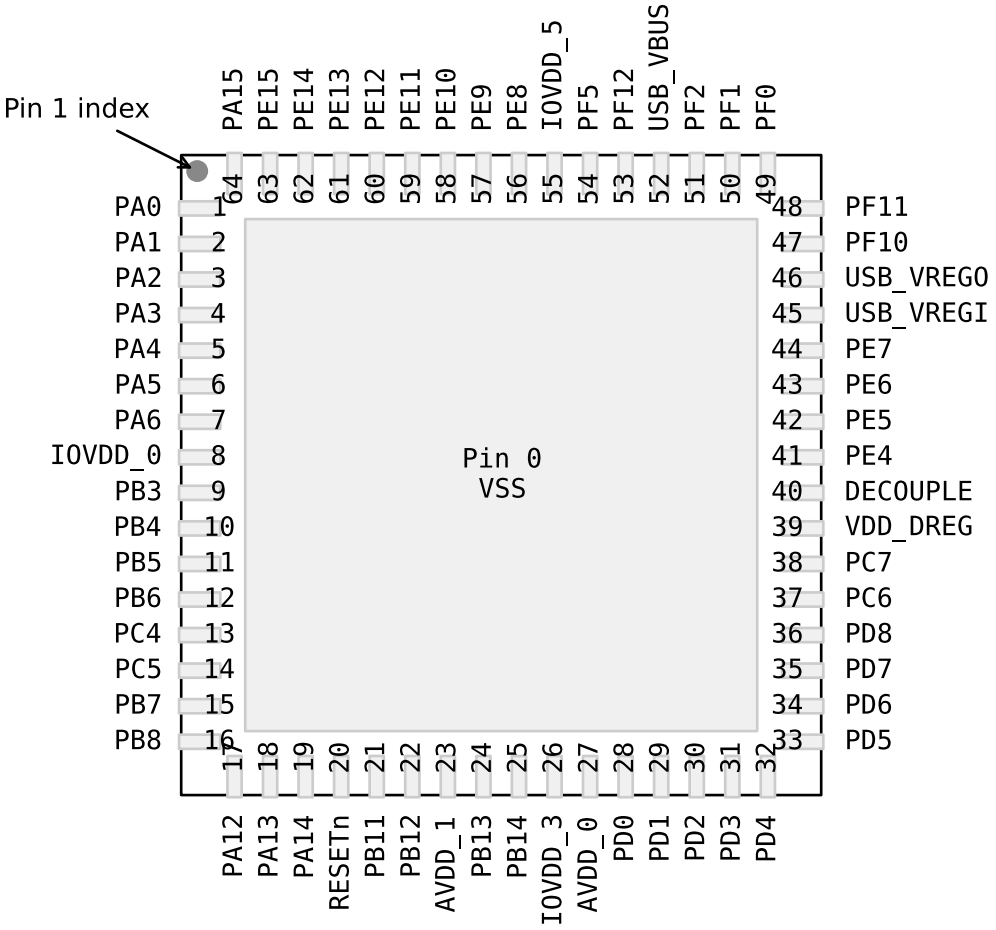

Figure 5.35. EFM32WG940 Pinout (top view, not to scale)

Table 5.52. Device Pinout

QFN64 Pin# and Name		Pin Alternate Functionality / Description			
Pin #	Pin Name	Analog	Timers	Communication	Other
0	VSS	Ground.			
1	PA0	LCD_SEG13	TIM0_CC0 #0/1/4	LEU0_RX #4 I2C0_SDA #0	PRS_CH0 #0 GPIO_EM4WU0
2	PA1	LCD_SEG14	TIM0_CC1 #0/1	I2C0_SCL #0	CMU_CLK1 #0 PRS_CH1 #0
3	PA2	LCD_SEG15	TIM0_CC2 #0/1		CMU_CLK0 #0 ETM_TD0 #3
4	PA3	LCD_SEG16	TIM0_CDTI0 #0		LES_ALTEX2 #0 ETM_TD1 #3
5	PA4	LCD_SEG17	TIM0_CDTI1 #0		LES_ALTEX3 #0 ETM_TD2 #3
6	PA5	LCD_SEG18	TIM0_CDTI2 #0	LEU1_TX #1	LES_ALTEX4 #0 ETM_TD3 #3
7	PA6	LCD_SEG19		LEU1_RX #1	ETM_TCLK #3 GPIO_EM4WU1
8	IOVDD_0	Digital IO power supply 0.			
9	PB3	LCD_SEG20/ LCD_COM4	PCNT1_S0IN #1	US2_TX #1	
10	PB4	LCD_SEG21/ LCD_COM5	PCNT1_S1IN #1	US2_RX #1	
11	PB5	LCD_SEG22/ LCD_COM6		US2_CLK #1	
12	PB6	LCD_SEG23/ LCD_COM7		US2_CS #1	
13	PC4	ACMP0_CH4 / DAC0_P0 / OPAMP_P0	TIM0_CDTI2 #4 LE-TIM0_OUT0 #3 PCNT1_S0IN #0	US2_CLK #0 I2C1_SDA #0	LES_CH4 #0
14	PC5	ACMP0_CH5 / DAC0_N0 / OPAMP_N0	LETIM0_OUT1 #3 PCNT1_S1IN #0	US2_CS #0 I2C1_SCL #0	LES_CH5 #0
15	PB7	LFXTAL_P	TIM1_CC0 #3	US0_TX #4 US1_CLK #0	
16	PB8	LFXTAL_N	TIM1_CC1 #3	US0_RX #4 US1_CS #0	
17	PA12	LCD_BCAP_P	TIM2_CC0 #1		
18	PA13	LCD_BCAP_N	TIM2_CC1 #1		
19	PA14	LCD_BEXT	TIM2_CC2 #1		
20	RESETn	Reset input, active low. To apply an external reset source to this pin, it is required to only drive this pin low during reset, and let the internal pull-up ensure that reset is released.			
21	PB11	DAC0_OUT0 / OPAMP_OUT0	TIM1_CC2 #3 LE-TIM0_OUT0 #1	I2C1_SDA #1	
22	PB12	DAC0_OUT1 / OPAMP_OUT1	LETIM0_OUT1 #1	I2C1_SCL #1	

QFN64 Pin# and Name		Pin Alternate Functionality / Description			
Pin #	Pin Name	Analog	Timers	Communication	Other
23	AVDD_1	Analog power supply 1.			
24	PB13	HFXTAL_P		US0_CLK #4/5 LEU0_TX #1	
25	PB14	HFXTAL_N		US0_CS #4/5 LEU0_RX #1	
26	IOVDD_3	Digital IO power supply 3.			
27	AVDD_0	Analog power supply 0.			
28	PD0	ADC0_CH0 DAC0_OUT0ALT #4/ OPAMP_OUT0ALT OPAMP_OUT2 #1	PCNT2_S0IN #0	US1_TX #1	
29	PD1	ADC0_CH1 DAC0_OUT1ALT #4/ OPAMP_OUT1ALT	TIM0_CC0 #3 PCNT2_S1IN #0	US1_RX #1	DBG_SWO #2
30	PD2	ADC0_CH2	TIM0_CC1 #3	USB_DMPU #0 US1_CLK #1	DBG_SWO #3
31	PD3	ADC0_CH3 OPAMP_N2	TIM0_CC2 #3	US1_CS #1	ETM_TD1 #0/2
32	PD4	ADC0_CH4 OPAMP_P2		LEU0_TX #0	ETM_TD2 #0/2
33	PD5	ADC0_CH5 OPAMP_OUT2 #0		LEU0_RX #0	ETM_TD3 #0/2
34	PD6	ADC0_CH6 / DAC0_P1 / OPAMP_P1	TIM1_CC0 #4 LE-TIM0_OUT0 #0 PCNT0_S0IN #3	US1_RX #2 I2C0_SDA #1	LES_ALTEX0 #0 ACMP0_O #2 ETM_TD0 #0
35	PD7	ADC0_CH7 / DAC0_N1 / OPAMP_N1	TIM1_CC1 #4 LE-TIM0_OUT1 #0 PCNT0_S1IN #3	US1_TX #2 I2C0_SCL #1	CMU_CLK0 #2 LES_ALTEX1 #0 ACMP1_O #2 ETM_TCLK #0
36	PD8	BU_VIN			CMU_CLK1 #1
37	PC6	ACMP0_CH6		LEU1_TX #0 I2C0_SDA #2	LES_CH6 #0 ETM_TCLK #2
38	PC7	ACMP0_CH7		LEU1_RX #0 I2C0_SCL #2	LES_CH7 #0 ETM_TD0 #2
39	VDD_DREG	Power supply for on-chip voltage regulator.			
40	DECOUPLE	Decouple output for on-chip voltage regulator. An external capacitance of size $C_{DECOUPLE}$ is required at this pin.			
41	PE4	LCD_COM0		US0_CS #1	
42	PE5	LCD_COM1		US0_CLK #1	
43	PE6	LCD_COM2		US0_RX #1	
44	PE7	LCD_COM3		US0_TX #1	
45	USB_VREGI	Input to internal 3.3V USB regulator			
46	USB_VREGO	Output and decoupling for internal 3.3V USB regulator			
47	PF10			USB_DM	
48	PF11			USB_DP	

QFN64 Pin# and Name		Pin Alternate Functionality / Description			
Pin #	Pin Name	Analog	Timers	Communication	Other
49	PF0		TIM0_CC0 #5 LE-TIM0_OUT0 #2	US1_CLK #2 LEU0_TX #3 I2C0_SDA #5	DBG_SWCLK #0/1/2/3
50	PF1		TIM0_CC1 #5 LE-TIM0_OUT1 #2	US1_CS #2 LEU0_RX #3 I2C0_SCL #5	DBG_SWDIO #0/1/2/3 GPIO_EM4WU3
51	PF2	LCD_SEG0	TIM0_CC2 #5	LEU0_TX #4	ACMP1_O #0 DBG_SWO #0 GPIO_EM4WU4
52	USB_VBUS	USB 5.0 V VBUS input.			
53	PF12			USB_ID	
54	PF5	LCD_SEG3	TIM0_CDTI2 #2/5	USB_VBUSEN #0	PRS_CH2 #1
55	IOVDD_5	Digital IO power supply 5.			
56	PE8	LCD_SEG4	PCNT2_S0IN #1		PRS_CH3 #1
57	PE9	LCD_SEG5	PCNT2_S1IN #1		
58	PE10	LCD_SEG6	TIM1_CC0 #1	US0_TX #0	BOOT_TX
59	PE11	LCD_SEG7	TIM1_CC1 #1	US0_RX #0	LES_ALTEX5 #0 BOOT_RX
60	PE12	LCD_SEG8	TIM1_CC2 #1	US0_RX #3 US0_CLK #0 I2C0_SDA #6	CMU_CLK1 #2 LES_ALTEX6 #0
61	PE13	LCD_SEG9		US0_TX #3 US0_CS #0 I2C0_SCL #6	LES_ALTEX7 #0 ACMP0_O #0 GPIO_EM4WU5
62	PE14	LCD_SEG10	TIM3_CC0 #0	LEU0_TX #2	
63	PE15	LCD_SEG11	TIM3_CC1 #0	LEU0_RX #2	
64	PA15	LCD_SEG12	TIM3_CC2 #0		

5.18.2 Alternate Functionality Pinout

A wide selection of alternate functionality is available for multiplexing to various pins. This is shown in the following table. The table shows the name of the alternate functionality in the first column, followed by columns showing the possible LOCATION bitfield settings.

Note: Some functionality, such as analog interfaces, do not have alternate settings or a LOCATION bitfield. In these cases, the pinout is shown in the column corresponding to LOCATION 0.

Table 5.53. Alternate Functionality Overview

Alternate	LOCATION							
Functionality	0	1	2	3	4	5	6	Description
ACMP0_CH4	PC4							Analog comparator ACMP0, channel 4.
ACMP0_CH5	PC5							Analog comparator ACMP0, channel 5.
ACMP0_CH6	PC6							Analog comparator ACMP0, channel 6.
ACMP0_CH7	PC7							Analog comparator ACMP0, channel 7.
ACMP0_O	PE13		PD6					Analog comparator ACMP0, digital output.
ACMP1_O	PF2		PD7					Analog comparator ACMP1, digital output.
ADC0_CH0	PD0							Analog to digital converter ADC0, input channel number 0.
ADC0_CH1	PD1							Analog to digital converter ADC0, input channel number 1.
ADC0_CH2	PD2							Analog to digital converter ADC0, input channel number 2.
ADC0_CH3	PD3							Analog to digital converter ADC0, input channel number 3.
ADC0_CH4	PD4							Analog to digital converter ADC0, input channel number 4.
ADC0_CH5	PD5							Analog to digital converter ADC0, input channel number 5.
ADC0_CH6	PD6							Analog to digital converter ADC0, input channel number 6.
ADC0_CH7	PD7							Analog to digital converter ADC0, input channel number 7.
BOOT_RX	PE11							Bootloader RX.
BOOT_TX	PE10							Bootloader TX.
BU_VIN	PD8							Battery input for Backup Power Domain
CMU_CLK0	PA2		PD7					Clock Management Unit, clock output number 0.
CMU_CLK1	PA1	PD8	PE12					Clock Management Unit, clock output number 1.
DAC0_OUT0 / OPAMP_OUT0	PB11							Digital to Analog Converter DAC0_OUT0 /OPAMP output channel number 0.
DAC0_OUT0ALT / OPAMP_OUT0ALT					PD0			Digital to Analog Converter DAC0_OUT0ALT / OPAMP alternative output for channel 0.
DAC0_OUT1 / OPAMP_OUT1	PB12							Digital to Analog Converter DAC0_OUT1 / OPAMP output channel number 1.

Alternate	LOCATION							
Functionality	0	1	2	3	4	5	6	Description
DAC0_OUT1ALT / OPAMP_OUT1ALT					PD1			Digital to Analog Converter DAC0_OUT1ALT / OPAMP alternative output for channel 1.
DBG_SWCLK	PF0	PF0	PF0	PF0				Debug-interface Serial Wire clock input. Note that this function is enabled to pin out of reset, and has a built-in pull down.
DBG_SWDIO	PF1	PF1	PF1	PF1				Debug-interface Serial Wire data input / output. Note that this function is enabled to pin out of reset, and has a built-in pull up.
DBG_SWO	PF2		PD1	PD2				Debug-interface Serial Wire viewer Output. Note that this function is not enabled after reset, and must be enabled by software to be used.
ETM_TCLK	PD7		PC6	PA6				Embedded Trace Module ETM clock .
ETM_TD0	PD6		PC7	PA2				Embedded Trace Module ETM data 0.
ETM_TD1	PD3		PD3	PA3				Embedded Trace Module ETM data 1.
ETM_TD2	PD4		PD4	PA4				Embedded Trace Module ETM data 2.
ETM_TD3	PD5		PD5	PA5				Embedded Trace Module ETM data 3.
GPIO_EM4WU0	PA0							Pin can be used to wake the system up from EM4
GPIO_EM4WU1	PA6							Pin can be used to wake the system up from EM4
GPIO_EM4WU3	PF1							Pin can be used to wake the system up from EM4
GPIO_EM4WU4	PF2							Pin can be used to wake the system up from EM4
GPIO_EM4WU5	PE13							Pin can be used to wake the system up from EM4
HFXTAL_N	PB14							High Frequency Crystal negative pin. Also used as external optional clock input pin.
HFXTAL_P	PB13							High Frequency Crystal positive pin.
I2C0_SCL	PA1	PD7	PC7			PF1	PE13	I2C0 Serial Clock Line input / output.
I2C0_SDA	PA0	PD6	PC6			PF0	PE12	I2C0 Serial Data input / output.
I2C1_SCL	PC5	PB12						I2C1 Serial Clock Line input / output.
I2C1_SDA	PC4	PB11						I2C1 Serial Data input / output.
LCD_BCAP_N	PA13							LCD voltage booster (optional), boost capacitor, negative pin. If using the LCD voltage booster, connect a 22 nF capacitor between LCD_BCAP_N and LCD_BCAP_P.
LCD_BCAP_P	PA12							LCD voltage booster (optional), boost capacitor, positive pin. If using the LCD voltage booster, connect a 22 nF capacitor between LCD_BCAP_N and LCD_BCAP_P.

Alternate	LOCATION							
Functionality	0	1	2	3	4	5	6	Description
LCD_BEXT	PA14							LCD voltage booster (optional), boost output. If using the LCD voltage booster, connect a 1 uF capacitor between this pin and VSS. An external LCD voltage may also be applied to this pin if the booster is not enabled. If AVDD is used directly as the LCD supply voltage, this pin may be left unconnected or used as a GPIO.
LCD_COM0	PE4							LCD driver common line number 0.
LCD_COM1	PE5							LCD driver common line number 1.
LCD_COM2	PE6							LCD driver common line number 2.
LCD_COM3	PE7							LCD driver common line number 3.
LCD_SEG0	PF2							LCD segment line 0. Segments 0, 1, 2 and 3 are controlled by SEGEN0.
LCD_SEG3	PF5							LCD segment line 3. Segments 0, 1, 2 and 3 are controlled by SEGEN0.
LCD_SEG4	PE8							LCD segment line 4. Segments 4, 5, 6 and 7 are controlled by SEGEN1.
LCD_SEG5	PE9							LCD segment line 5. Segments 4, 5, 6 and 7 are controlled by SEGEN1.
LCD_SEG6	PE10							LCD segment line 6. Segments 4, 5, 6 and 7 are controlled by SEGEN1.
LCD_SEG7	PE11							LCD segment line 7. Segments 4, 5, 6 and 7 are controlled by SEGEN1.
LCD_SEG8	PE12							LCD segment line 8. Segments 8, 9, 10 and 11 are controlled by SEGEN2.
LCD_SEG9	PE13							LCD segment line 9. Segments 8, 9, 10 and 11 are controlled by SEGEN2.
LCD_SEG10	PE14							LCD segment line 10. Segments 8, 9, 10 and 11 are controlled by SEGEN2.
LCD_SEG11	PE15							LCD segment line 11. Segments 8, 9, 10 and 11 are controlled by SEGEN2.
LCD_SEG12	PA15							LCD segment line 12. Segments 12, 13, 14 and 15 are controlled by SEGEN3.
LCD_SEG13	PA0							LCD segment line 13. Segments 12, 13, 14 and 15 are controlled by SEGEN3.
LCD_SEG14	PA1							LCD segment line 14. Segments 12, 13, 14 and 15 are controlled by SEGEN3.
LCD_SEG15	PA2							LCD segment line 15. Segments 12, 13, 14 and 15 are controlled by SEGEN3.
LCD_SEG16	PA3							LCD segment line 16. Segments 16, 17, 18 and 19 are controlled by SEGEN4.
LCD_SEG17	PA4							LCD segment line 17. Segments 16, 17, 18 and 19 are controlled by SEGEN4.
LCD_SEG18	PA5							LCD segment line 18. Segments 16, 17, 18 and 19 are controlled by SEGEN4.

Alternate	LOCATION							
Functionality	0	1	2	3	4	5	6	Description
LCD_SEG19	PA6							LCD segment line 19. Segments 16, 17, 18 and 19 are controlled by SEGEN4.
LCD_SEG20/ LCD_COM4	PB3							LCD segment line 20. Segments 20, 21, 22 and 23 are controlled by SEGEN5. This pin may also be used as LCD COM line 4
LCD_SEG21/ LCD_COM5	PB4							LCD segment line 21. Segments 20, 21, 22 and 23 are controlled by SEGEN5. This pin may also be used as LCD COM line 5
LCD_SEG22/ LCD_COM6	PB5							LCD segment line 22. Segments 20, 21, 22 and 23 are controlled by SEGEN5. This pin may also be used as LCD COM line 6
LCD_SEG23/ LCD_COM7	PB6							LCD segment line 23. Segments 20, 21, 22 and 23 are controlled by SEGEN5. This pin may also be used as LCD COM line 7
LES_ALTEX0	PD6							LESENSE alternate exite output 0.
LES_ALTEX1	PD7							LESENSE alternate exite output 1.
LES_ALTEX2	PA3							LESENSE alternate exite output 2.
LES_ALTEX3	PA4							LESENSE alternate exite output 3.
LES_ALTEX4	PA5							LESENSE alternate exite output 4.
LES_ALTEX5	PE11							LESENSE alternate exite output 5.
LES_ALTEX6	PE12							LESENSE alternate exite output 6.
LES_ALTEX7	PE13							LESENSE alternate exite output 7.
LES_CH4	PC4							LESENSE channel 4.
LES_CH5	PC5							LESENSE channel 5.
LES_CH6	PC6							LESENSE channel 6.
LES_CH7	PC7							LESENSE channel 7.
LETIM0_OUT0	PD6	PB11	PF0	PC4				Low Energy Timer LETIM0, output channel 0.
LETIM0_OUT1	PD7	PB12	PF1	PC5				Low Energy Timer LETIM0, output channel 1.
LEU0_RX	PD5	PB14	PE15	PF1	PA0			LEUART0 Receive input.
LEU0_TX	PD4	PB13	PE14	PF0	PF2			LEUART0 Transmit output. Also used as receive input in half duplex communication.
LEU1_RX	PC7	PA6						LEUART1 Receive input.
LEU1_TX	PC6	PA5						LEUART1 Transmit output. Also used as receive input in half duplex communication.
LFXTAL_N	PB8							Low Frequency Crystal (typically 32.768 kHz) negative pin. Also used as an optional external clock input pin.
LFXTAL_P	PB7							Low Frequency Crystal (typically 32.768 kHz) positive pin.
OPAMP_N0 / DAC0_N0	PC5							Operational Amplifier 0 external negative input.
OPAMP_N1 / DAC0_N1	PD7							Operational Amplifier 1 external negative input.

Alternate	LOCATION							
Functionality	0	1	2	3	4	5	6	Description
OPAMP_N2	PD3							Operational Amplifier 2 external negative input.
OPAMP_OUT2	PD5	PD0						Operational Amplifier 2 output.
OPAMP_P0 / DAC0_P0	PC4							Operational Amplifier 0 external positive input.
OPAMP_P1 / DAC0_P1	PD6							Operational Amplifier 1 external positive input.
OPAMP_P2	PD4							Operational Amplifier 2 external positive input.
PCNT0_S0IN				PD6				Pulse Counter PCNT0 input number 0.
PCNT0_S1IN				PD7				Pulse Counter PCNT0 input number 1.
PCNT1_S0IN	PC4	PB3						Pulse Counter PCNT1 input number 0.
PCNT1_S1IN	PC5	PB4						Pulse Counter PCNT1 input number 1.
PCNT2_S0IN	PD0	PE8						Pulse Counter PCNT2 input number 0.
PCNT2_S1IN	PD1	PE9						Pulse Counter PCNT2 input number 1.
PRS_CH0	PA0							Peripheral Reflex System PRS, channel 0.
PRS_CH1	PA1							Peripheral Reflex System PRS, channel 1.
PRS_CH2		PF5						Peripheral Reflex System PRS, channel 2.
PRS_CH3		PE8						Peripheral Reflex System PRS, channel 3.
TIM0_CC0	PA0	PA0		PD1	PA0	PF0		Timer 0 Capture Compare input / output channel 0.
TIM0_CC1	PA1	PA1		PD2		PF1		Timer 0 Capture Compare input / output channel 1.
TIM0_CC2	PA2	PA2		PD3		PF2		Timer 0 Capture Compare input / output channel 2.
TIM0_CDTI0	PA3							Timer 0 Complimentary Dead Time Insertion channel 0.
TIM0_CDTI1	PA4							Timer 0 Complimentary Dead Time Insertion channel 1.
TIM0_CDTI2	PA5		PF5		PC4	PF5		Timer 0 Complimentary Dead Time Insertion channel 2.
TIM1_CC0		PE10		PB7	PD6			Timer 1 Capture Compare input / output channel 0.
TIM1_CC1		PE11		PB8	PD7			Timer 1 Capture Compare input / output channel 1.
TIM1_CC2		PE12		PB11				Timer 1 Capture Compare input / output channel 2.
TIM2_CC0		PA12						Timer 2 Capture Compare input / output channel 0.
TIM2_CC1		PA13						Timer 2 Capture Compare input / output channel 1.
TIM2_CC2		PA14						Timer 2 Capture Compare input / output channel 2.
TIM3_CC0	PE14							Timer 3 Capture Compare input / output channel 0.
TIM3_CC1	PE15							Timer 3 Capture Compare input / output channel 1.
TIM3_CC2	PA15							Timer 3 Capture Compare input / output channel 2.
US0_CLK	PE12	PE5			PB13	PB13		USART0 clock input / output.
US0_CS	PE13	PE4			PB14	PB14		USART0 chip select input / output.

Alternate	LOCATION							
Functionality	0	1	2	3	4	5	6	Description
US0_RX	PE11	PE6		PE12	PB8			USART0 Asynchronous Receive. USART0 Synchronous mode Main Input / Secondary Output (MISO).
US0_TX	PE10	PE7		PE13	PB7			USART0 Asynchronous Transmit.Also used as receive input in half duplex communication. USART0 Synchronous mode Main Output / Secondary Input (MOSI).
US1_CLK	PB7	PD2	PF0					USART1 clock input / output.
US1_CS	PB8	PD3	PF1					USART1 chip select input / output.
US1_RX		PD1	PD6					USART1 Asynchronous Receive. USART1 Synchronous mode Main Input / Secondary Output (MISO).
US1_TX		PD0	PD7					USART1 Asynchronous Transmit.Also used as receive input in half duplex communication. USART1 Synchronous mode Main Output / Secondary Input (MOSI).
US2_CLK	PC4	PB5						USART2 clock input / output.
US2_CS	PC5	PB6						USART2 chip select input / output.
US2_RX		PB4						USART2 Asynchronous Receive. USART2 Synchronous mode Main Input / Secondary Output (MISO).
US2_TX		PB3						USART2 Asynchronous Transmit.Also used as receive input in half duplex communication. USART2 Synchronous mode Main Output / Secondary Input (MOSI).
USB_DM	PF10							USB D- pin.
USB_DMPU	PD2							USB D- Pullup control.
USB_DP	PF11							USB D+ pin.
USB_ID	PF12							USB ID pin. Used in OTG mode.
USB_VBUS	USB_VBUS							USB 5 V VBUS input.
USB_VBUSEN	PF5							USB 5 V VBUS enable.
USB_VREGI	USB_VREGI							USB Input to internal 3.3 V regulator
USB_VREGO	USB_VREGO							USB Decoupling for internal 3.3 V USB regulator and regulator output

5.18.3 GPIO Pinout Overview

The specific GPIO pins available in EFM32WG940 are shown in the following table. Each GPIO port is organized as 16-bit ports indicated by letters A through F, and the individual pin on this port is indicated by a number from 15 down to 0.

Table 5.54. GPIO Pinout

Port	Pin 15	Pin 14	Pin 13	Pin 12	Pin 11	Pin 10	Pin 9	Pin 8	Pin 7	Pin 6	Pin 5	Pin 4	Pin 3	Pin 2	Pin 1	Pin 0
Port A	PA15	PA14	PA13	PA12	—	—	—	—	—	PA6	PA5	PA4	PA3	PA2	PA1	PA0
Port B	—	PB14	PB13	PB12	PB11	—	—	PB8	PB7	PB6	PB5	PB4	PB3	—	—	—
Port C	—	—	—	—	—	—	—	—	PC7	PC6	PC5	PC4	—	—	—	—
Port D	—	—	—	—	—	—	—	PD8	PD7	PD6	PD5	PD4	PD3	PD2	PD1	PD0
Port E	PE15	PE14	PE13	PE12	PE11	PE10	PE9	PE8	PE7	PE6	PE5	PE4	—	—	—	—
Port F	—	—	—	PF12	PF11	PF10	—	—	—	—	PF5	—	—	PF2	PF1	PF0

5.18.4 Opamp Pinout Overview

The specific opamp terminals available in EFM32WG940 is shown in the following figure.

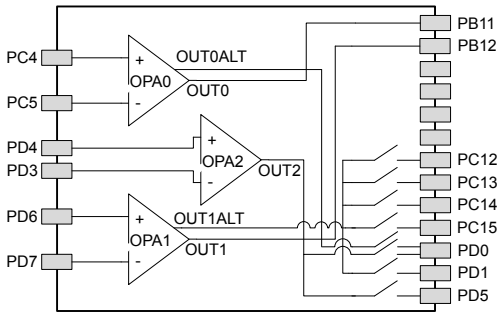

Figure 5.36. Opamp Pinout

5.19 EFM32WG942 (TQFP64)

5.19.1 Pinout

The EFM32WG942 pinout is shown in the following figure and table. Alternate locations are denoted by "#" followed by the location number (Multiple locations on the same pin are split with "/"). Alternate locations can be configured in the LOCATION bitfield in the *_ROUTE register in the module in question.

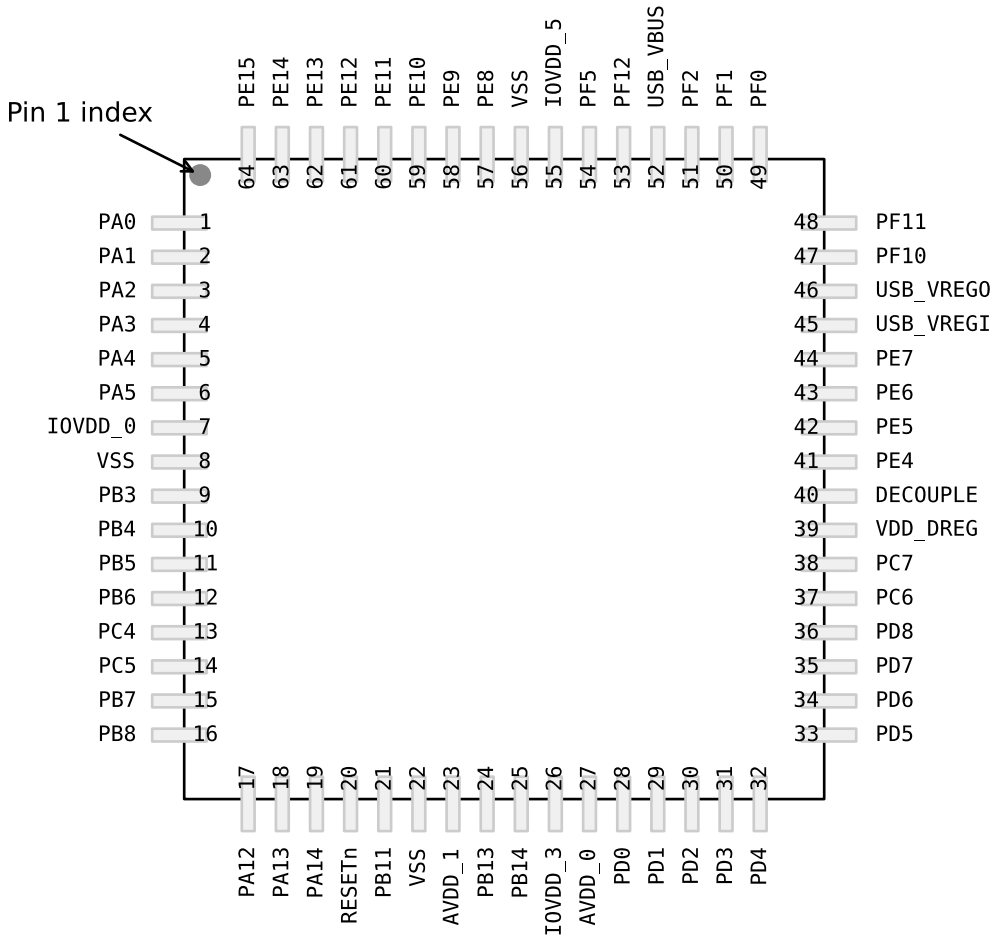

Figure 5.37. EFM32WG942 Pinout (top view, not to scale)

Table 5.55. Device Pinout

QFP64 Pin# and Name		Pin Alternate Functionality / Description			
Pin #	**Pin Name**	**Analog**	**Timers**	**Communication**	**Other**
1	PA0	LCD_SEG13	TIM0_CC0 #0/1/4	LEU0_RX #4 I2C0_SDA #0	PRS_CH0 #0 GPIO_EM4WU0
2	PA1	LCD_SEG14	TIM0_CC1 #0/1	I2C0_SCL #0	CMU_CLK1 #0 PRS_CH1 #0
3	PA2	LCD_SEG15	TIM0_CC2 #0/1		CMU_CLK0 #0 ETM_TD0 #3

QFP64 Pin# and Name		Pin Alternate Functionality / Description			
Pin #	Pin Name	Analog	Timers	Communication	Other
4	PA3	LCD_SEG16	TIM0_CDTI0 #0		LES_ALTEX2 #0 ETM_TD1 #3
5	PA4	LCD_SEG17	TIM0_CDTI1 #0		LES_ALTEX3 #0 ETM_TD2 #3
6	PA5	LCD_SEG18	TIM0_CDTI2 #0	LEU1_TX #1	LES_ALTEX4 #0 ETM_TD3 #3
7	IOVDD_0	Digital IO power supply 0.			
8	VSS	Ground.			
9	PB3	LCD_SEG20/ LCD_COM4	PCNT1_S0IN #1	US2_TX #1	
10	PB4	LCD_SEG21/ LCD_COM5	PCNT1_S1IN #1	US2_RX #1	
11	PB5	LCD_SEG22/ LCD_COM6		US2_CLK #1	
12	PB6	LCD_SEG23/ LCD_COM7		US2_CS #1	
13	PC4	ACMP0_CH4 / DAC0_P0 / OPAMP_P0	TIM0_CDTI2 #4 LE-TIM0_OUT0 #3 PCNT1_S0IN #0	US2_CLK #0 I2C1_SDA #0	LES_CH4 #0
14	PC5	ACMP0_CH5 / DAC0_N0 / OPAMP_N0	LETIM0_OUT1 #3 PCNT1_S1IN #0	US2_CS #0 I2C1_SCL #0	LES_CH5 #0
15	PB7	LFXTAL_P	TIM1_CC0 #3	US0_TX #4 US1_CLK #0	
16	PB8	LFXTAL_N	TIM1_CC1 #3	US0_RX #4 US1_CS #0	
17	PA12	LCD_BCAP_P	TIM2_CC0 #1		
18	PA13	LCD_BCAP_N	TIM2_CC1 #1		
19	PA14	LCD_BEXT	TIM2_CC2 #1		
20	RESETn	Reset input, active low. To apply an external reset source to this pin, it is required to only drive this pin low during reset, and let the internal pull-up ensure that reset is released.			
21	PB11	DAC0_OUT0 / OPAMP_OUT0	TIM1_CC2 #3 LE-TIM0_OUT0 #1	I2C1_SDA #1	
22	VSS	Ground.			
23	AVDD_1	Analog power supply 1.			
24	PB13	HFXTAL_P		US0_CLK #4/5 LEU0_TX #1	
25	PB14	HFXTAL_N		US0_CS #4/5 LEU0_RX #1	
26	IOVDD_3	Digital IO power supply 3.			
27	AVDD_0	Analog power supply 0.			
28	PD0	ADC0_CH0 DAC0_OUT0ALT #4/ OPAMP_OUT0ALT OPAMP_OUT2 #1	PCNT2_S0IN #0	US1_TX #1	

QFP64 Pin# and Name		Pin Alternate Functionality / Description			
Pin #	Pin Name	Analog	Timers	Communication	Other
29	PD1	ADC0_CH1 DAC0_OUT1ALT #4/ OPAMP_OUT1ALT	TIM0_CC0 #3 PCNT2_S1IN #0	US1_RX #1	DBG_SWO #2
30	PD2	ADC0_CH2	TIM0_CC1 #3	USB_DMPU #0 US1_CLK #1	DBG_SWO #3
31	PD3	ADC0_CH3 OPAMP_N2	TIM0_CC2 #3	US1_CS #1	ETM_TD1 #0/2
32	PD4	ADC0_CH4 OPAMP_P2		LEU0_TX #0	ETM_TD2 #0/2
33	PD5	ADC0_CH5 OPAMP_OUT2 #0		LEU0_RX #0	ETM_TD3 #0/2
34	PD6	ADC0_CH6 / DAC0_P1 / OPAMP_P1	TIM1_CC0 #4 LE-TIM0_OUT0 #0 PCNT0_S0IN #3	US1_RX #2 I2C0_SDA #1	LES_ALTEX0 #0 ACMP0_O #2 ETM_TD0 #0
35	PD7	ADC0_CH7 / DAC0_N1 / OPAMP_N1	TIM1_CC1 #4 LE-TIM0_OUT1 #0 PCNT0_S1IN #3	US1_TX #2 I2C0_SCL #1	CMU_CLK0 #2 LES_ALTEX1 #0 ACMP1_O #2 ETM_TCLK #0
36	PD8	BU_VIN			CMU_CLK1 #1
37	PC6	ACMP0_CH6		LEU1_TX #0 I2C0_SDA #2	LES_CH6 #0 ETM_TCLK #2
38	PC7	ACMP0_CH7		LEU1_RX #0 I2C0_SCL #2	LES_CH7 #0 ETM_TD0 #2
39	VDD_DREG	Power supply for on-chip voltage regulator.			
40	DECOUPLE	Decouple output for on-chip voltage regulator. An external capacitance of size $C_{DECOUPLE}$ is required at this pin.			
41	PE4	LCD_COM0		US0_CS #1	
42	PE5	LCD_COM1		US0_CLK #1	
43	PE6	LCD_COM2		US0_RX #1	
44	PE7	LCD_COM3		US0_TX #1	
45	USB_VREGI	Input to internal 3.3V USB regulator			
46	USB_VREGO	Output and decoupling for internal 3.3V USB regulator			
47	PF10			USB_DM	
48	PF11			USB_DP	
49	PF0		TIM0_CC0 #5 LE-TIM0_OUT0 #2	US1_CLK #2 LEU0_TX #3 I2C0_SDA #5	DBG_SWCLK #0/1/2/3
50	PF1		TIM0_CC1 #5 LE-TIM0_OUT1 #2	US1_CS #2 LEU0_RX #3 I2C0_SCL #5	DBG_SWDIO #0/1/2/3 GPIO_EM4WU3
51	PF2	LCD_SEG0	TIM0_CC2 #5	LEU0_TX #4	ACMP1_O #0 DBG_SWO #0 GPIO_EM4WU4
52	USB_VBUS	USB 5.0 V VBUS input.			
53	PF12			USB_ID	
54	PF5	LCD_SEG3	TIM0_CDTI2 #2/5	USB_VBUSEN #0	PRS_CH2 #1
55	IOVDD_5	Digital IO power supply 5.			

QFP64 Pin# and Name		Pin Alternate Functionality / Description			
Pin #	Pin Name	Analog	Timers	Communication	Other
56	VSS	Ground.			
57	PE8	LCD_SEG4	PCNT2_S0IN #1		PRS_CH3 #1
58	PE9	LCD_SEG5	PCNT2_S1IN #1		
59	PE10	LCD_SEG6	TIM1_CC0 #1	US0_TX #0	BOOT_TX
60	PE11	LCD_SEG7	TIM1_CC1 #1	US0_RX #0	LES_ALTEX5 #0 BOOT_RX
61	PE12	LCD_SEG8	TIM1_CC2 #1	US0_RX #3 US0_CLK #0 I2C0_SDA #6	CMU_CLK1 #2 LES_ALTEX6 #0
62	PE13	LCD_SEG9		US0_TX #3 US0_CS #0 I2C0_SCL #6	LES_ALTEX7 #0 ACMP0_O #0 GPIO_EM4WU5
63	PE14	LCD_SEG10	TIM3_CC0 #0	LEU0_TX #2	
64	PE15	LCD_SEG11	TIM3_CC1 #0	LEU0_RX #2	

5.19.2 Alternate Functionality Pinout

A wide selection of alternate functionality is available for multiplexing to various pins. This is shown in the following table. The table shows the name of the alternate functionality in the first column, followed by columns showing the possible LOCATION bitfield settings.

Note: Some functionality, such as analog interfaces, do not have alternate settings or a LOCATION bitfield. In these cases, the pinout is shown in the column corresponding to LOCATION 0.

Table 5.56. Alternate Functionality Overview

Alternate	LOCATION							
Functionality	0	1	2	3	4	5	6	Description
ACMP0_CH4	PC4							Analog comparator ACMP0, channel 4.
ACMP0_CH5	PC5							Analog comparator ACMP0, channel 5.
ACMP0_CH6	PC6							Analog comparator ACMP0, channel 6.
ACMP0_CH7	PC7							Analog comparator ACMP0, channel 7.
ACMP0_O	PE13		PD6					Analog comparator ACMP0, digital output.
ACMP1_O	PF2		PD7					Analog comparator ACMP1, digital output.
ADC0_CH0	PD0							Analog to digital converter ADC0, input channel number 0.
ADC0_CH1	PD1							Analog to digital converter ADC0, input channel number 1.
ADC0_CH2	PD2							Analog to digital converter ADC0, input channel number 2.
ADC0_CH3	PD3							Analog to digital converter ADC0, input channel number 3.
ADC0_CH4	PD4							Analog to digital converter ADC0, input channel number 4.
ADC0_CH5	PD5							Analog to digital converter ADC0, input channel number 5.
ADC0_CH6	PD6							Analog to digital converter ADC0, input channel number 6.
ADC0_CH7	PD7							Analog to digital converter ADC0, input channel number 7.
BOOT_RX	PE11							Bootloader RX.
BOOT_TX	PE10							Bootloader TX.
BU_VIN	PD8							Battery input for Backup Power Domain
CMU_CLK0	PA2		PD7					Clock Management Unit, clock output number 0.
CMU_CLK1	PA1	PD8	PE12					Clock Management Unit, clock output number 1.
DAC0_OUT0 / OPAMP_OUT0	PB11							Digital to Analog Converter DAC0_OUT0 /OPAMP output channel number 0.
DAC0_OUT0ALT / OPAMP_OUT0ALT					PD0			Digital to Analog Converter DAC0_OUT0ALT / OPAMP alternative output for channel 0.
DAC0_OUT1ALT / OPAMP_OUT1ALT					PD1			Digital to Analog Converter DAC0_OUT1ALT / OPAMP alternative output for channel 1.

Alternate	LOCATION							
Functionality	0	1	2	3	4	5	6	Description
DBG_SWCLK	PF0	PF0	PF0	PF0				Debug-interface Serial Wire clock input. Note that this function is enabled to pin out of reset, and has a built-in pull down.
DBG_SWDIO	PF1	PF1	PF1	PF1				Debug-interface Serial Wire data input / output. Note that this function is enabled to pin out of reset, and has a built-in pull up.
DBG_SWO	PF2		PD1	PD2				Debug-interface Serial Wire viewer Output. Note that this function is not enabled after reset, and must be enabled by software to be used.
ETM_TCLK	PD7		PC6					Embedded Trace Module ETM clock .
ETM_TD0	PD6		PC7	PA2				Embedded Trace Module ETM data 0.
ETM_TD1	PD3		PD3	PA3				Embedded Trace Module ETM data 1.
ETM_TD2	PD4		PD4	PA4				Embedded Trace Module ETM data 2.
ETM_TD3	PD5		PD5	PA5				Embedded Trace Module ETM data 3.
GPIO_EM4WU0	PA0							Pin can be used to wake the system up from EM4
GPIO_EM4WU3	PF1							Pin can be used to wake the system up from EM4
GPIO_EM4WU4	PF2							Pin can be used to wake the system up from EM4
GPIO_EM4WU5	PE13							Pin can be used to wake the system up from EM4
HFXTAL_N	PB14							High Frequency Crystal negative pin. Also used as external optional clock input pin.
HFXTAL_P	PB13							High Frequency Crystal positive pin.
I2C0_SCL	PA1	PD7	PC7			PF1	PE13	I2C0 Serial Clock Line input / output.
I2C0_SDA	PA0	PD6	PC6			PF0	PE12	I2C0 Serial Data input / output.
I2C1_SCL	PC5							I2C1 Serial Clock Line input / output.
I2C1_SDA	PC4							I2C1 Serial Data input / output.
LCD_BCAP_N	PA13							LCD voltage booster (optional), boost capacitor, negative pin. If using the LCD voltage booster, connect a 22 nF capacitor between LCD_BCAP_N and LCD_BCAP_P.
LCD_BCAP_P	PA12							LCD voltage booster (optional), boost capacitor, positive pin. If using the LCD voltage booster, connect a 22 nF capacitor between LCD_BCAP_N and LCD_BCAP_P.
LCD_BEXT	PA14							LCD voltage booster (optional), boost output. If using the LCD voltage booster, connect a 1 uF capacitor between this pin and VSS. An external LCD voltage may also be applied to this pin if the booster is not enabled. If AVDD is used directly as the LCD supply voltage, this pin may be left unconnected or used as a GPIO.
LCD_COM0	PE4							LCD driver common line number 0.
LCD_COM1	PE5							LCD driver common line number 1.

Alternate	LOCATION							
Functionality	0	1	2	3	4	5	6	Description
LCD_COM2	PE6							LCD driver common line number 2.
LCD_COM3	PE7							LCD driver common line number 3.
LCD_SEG0	PF2							LCD segment line 0. Segments 0, 1, 2 and 3 are controlled by SEGEN0.
LCD_SEG3	PF5							LCD segment line 3. Segments 0, 1, 2 and 3 are controlled by SEGEN0.
LCD_SEG4	PE8							LCD segment line 4. Segments 4, 5, 6 and 7 are controlled by SEGEN1.
LCD_SEG5	PE9							LCD segment line 5. Segments 4, 5, 6 and 7 are controlled by SEGEN1.
LCD_SEG6	PE10							LCD segment line 6. Segments 4, 5, 6 and 7 are controlled by SEGEN1.
LCD_SEG7	PE11							LCD segment line 7. Segments 4, 5, 6 and 7 are controlled by SEGEN1.
LCD_SEG8	PE12							LCD segment line 8. Segments 8, 9, 10 and 11 are controlled by SEGEN2.
LCD_SEG9	PE13							LCD segment line 9. Segments 8, 9, 10 and 11 are controlled by SEGEN2.
LCD_SEG10	PE14							LCD segment line 10. Segments 8, 9, 10 and 11 are controlled by SEGEN2.
LCD_SEG11	PE15							LCD segment line 11. Segments 8, 9, 10 and 11 are controlled by SEGEN2.
LCD_SEG13	PA0							LCD segment line 13. Segments 12, 13, 14 and 15 are controlled by SEGEN3.
LCD_SEG14	PA1							LCD segment line 14. Segments 12, 13, 14 and 15 are controlled by SEGEN3.
LCD_SEG15	PA2							LCD segment line 15. Segments 12, 13, 14 and 15 are controlled by SEGEN3.
LCD_SEG16	PA3							LCD segment line 16. Segments 16, 17, 18 and 19 are controlled by SEGEN4.
LCD_SEG17	PA4							LCD segment line 17. Segments 16, 17, 18 and 19 are controlled by SEGEN4.
LCD_SEG18	PA5							LCD segment line 18. Segments 16, 17, 18 and 19 are controlled by SEGEN4.
LCD_SEG20/ LCD_COM4	PB3							LCD segment line 20. Segments 20, 21, 22 and 23 are controlled by SEGEN5. This pin may also be used as LCD COM line 4
LCD_SEG21/ LCD_COM5	PB4							LCD segment line 21. Segments 20, 21, 22 and 23 are controlled by SEGEN5. This pin may also be used as LCD COM line 5
LCD_SEG22/ LCD_COM6	PB5							LCD segment line 22. Segments 20, 21, 22 and 23 are controlled by SEGEN5. This pin may also be used as LCD COM line 6
LCD_SEG23/ LCD_COM7	PB6							LCD segment line 23. Segments 20, 21, 22 and 23 are controlled by SEGEN5. This pin may also be used as LCD COM line 7

Alternate	LOCATION							
Functionality	0	1	2	3	4	5	6	Description
LES_ALTEX0	PD6							LESENSE alternate exite output 0.
LES_ALTEX1	PD7							LESENSE alternate exite output 1.
LES_ALTEX2	PA3							LESENSE alternate exite output 2.
LES_ALTEX3	PA4							LESENSE alternate exite output 3.
LES_ALTEX4	PA5							LESENSE alternate exite output 4.
LES_ALTEX5	PE11							LESENSE alternate exite output 5.
LES_ALTEX6	PE12							LESENSE alternate exite output 6.
LES_ALTEX7	PE13							LESENSE alternate exite output 7.
LES_CH4	PC4							LESENSE channel 4.
LES_CH5	PC5							LESENSE channel 5.
LES_CH6	PC6							LESENSE channel 6.
LES_CH7	PC7							LESENSE channel 7.
LETIM0_OUT0	PD6	PB11	PF0	PC4				Low Energy Timer LETIM0, output channel 0.
LETIM0_OUT1	PD7		PF1	PC5				Low Energy Timer LETIM0, output channel 1.
LEU0_RX	PD5	PB14	PE15	PF1	PA0			LEUART0 Receive input.
LEU0_TX	PD4	PB13	PE14	PF0	PF2			LEUART0 Transmit output. Also used as receive input in half duplex communication.
LEU1_RX	PC7							LEUART1 Receive input.
LEU1_TX	PC6	PA5						LEUART1 Transmit output. Also used as receive input in half duplex communication.
LFXTAL_N	PB8							Low Frequency Crystal (typically 32.768 kHz) negative pin. Also used as an optional external clock input pin.
OPAMP_N0 / DAC0_N0	PC5							Operational Amplifier 0 external negative input.
OPAMP_N1 / DAC0_N1	PD7							Operational Amplifier 1 external negative input.
OPAMP_N2	PD3							Operational Amplifier 2 external negative input.
OPAMP_OUT2	PD5	PD0						Operational Amplifier 2 output.
OPAMP_P0 / DAC0_P0	PC4							Operational Amplifier 0 external positive input.
OPAMP_P1 / DAC0_P1	PD6							Operational Amplifier 1 external positive input.
OPAMP_P2	PD4							Operational Amplifier 2 external positive input.
LFXTAL_P	PB7							Low Frequency Crystal (typically 32.768 kHz) positive pin.
PCNT0_S0IN				PD6				Pulse Counter PCNT0 input number 0.
PCNT0_S1IN				PD7				Pulse Counter PCNT0 input number 1.
PCNT1_S0IN	PC4	PB3						Pulse Counter PCNT1 input number 0.
PCNT1_S1IN	PC5	PB4						Pulse Counter PCNT1 input number 1.

Alternate	LOCATION							
Functionality	0	1	2	3	4	5	6	Description
PCNT2_S0IN	PD0	PE8						Pulse Counter PCNT2 input number 0.
PCNT2_S1IN	PD1	PE9						Pulse Counter PCNT2 input number 1.
PRS_CH0	PA0							Peripheral Reflex System PRS, channel 0.
PRS_CH1	PA1							Peripheral Reflex System PRS, channel 1.
PRS_CH2		PF5						Peripheral Reflex System PRS, channel 2.
PRS_CH3		PE8						Peripheral Reflex System PRS, channel 3.
TIM0_CC0	PA0	PA0		PD1	PA0	PF0		Timer 0 Capture Compare input / output channel 0.
TIM0_CC1	PA1	PA1		PD2		PF1		Timer 0 Capture Compare input / output channel 1.
TIM0_CC2	PA2	PA2		PD3		PF2		Timer 0 Capture Compare input / output channel 2.
TIM0_CDTI0	PA3							Timer 0 Complimentary Dead Time Insertion channel 0.
TIM0_CDTI1	PA4							Timer 0 Complimentary Dead Time Insertion channel 1.
TIM0_CDTI2	PA5		PF5		PC4	PF5		Timer 0 Complimentary Dead Time Insertion channel 2.
TIM1_CC0		PE10		PB7	PD6			Timer 1 Capture Compare input / output channel 0.
TIM1_CC1		PE11		PB8	PD7			Timer 1 Capture Compare input / output channel 1.
TIM1_CC2		PE12		PB11				Timer 1 Capture Compare input / output channel 2.
TIM2_CC0		PA12						Timer 2 Capture Compare input / output channel 0.
TIM2_CC1		PA13						Timer 2 Capture Compare input / output channel 1.
TIM2_CC2		PA14						Timer 2 Capture Compare input / output channel 2.
TIM3_CC0	PE14							Timer 3 Capture Compare input / output channel 0.
TIM3_CC1	PE15							Timer 3 Capture Compare input / output channel 1.
US0_CLK	PE12	PE5			PB13	PB13		USART0 clock input / output.
US0_CS	PE13	PE4			PB14	PB14		USART0 chip select input / output.
US0_RX	PE11	PE6		PE12	PB8			USART0 Asynchronous Receive. USART0 Synchronous mode Main Input / Secondary Output (MISO).
US0_TX	PE10	PE7		PE13	PB7			USART0 Asynchronous Transmit.Also used as receive input in half duplex communication. USART0 Synchronous mode Main Output / Secondary Input (MOSI).
US1_CLK	PB7	PD2	PF0					USART1 clock input / output.
US1_CS	PB8	PD3	PF1					USART1 chip select input / output.
US1_RX		PD1	PD6					USART1 Asynchronous Receive. USART1 Synchronous mode Main Input / Secondary Output (MISO).

Alternate	LOCATION							
Functionality	0	1	2	3	4	5	6	Description
US1_TX		PD0	PD7					USART1 Asynchronous Transmit.Also used as receive input in half duplex communication. USART1 Synchronous mode Main Output / Secondary Input (MOSI).
US2_CLK	PC4	PB5						USART2 clock input / output.
US2_CS	PC5	PB6						USART2 chip select input / output.
US2_RX		PB4						USART2 Asynchronous Receive. USART2 Synchronous mode Main Input / Secondary Output (MISO).
US2_TX		PB3						USART2 Asynchronous Transmit.Also used as receive input in half duplex communication. USART2 Synchronous mode Main Output / Secondary Input (MOSI).
USB_DM	PF10							USB D- pin.
USB_DMPU	PD2							USB D- Pullup control.
USB_DP	PF11							USB D+ pin.
USB_ID	PF12							USB ID pin. Used in OTG mode.
USB_VBUS	USB_VBUS							USB 5 V VBUS input.
USB_VBUSEN	PF5							USB 5 V VBUS enable.
USB_VREGI	USB_VREGI							USB Input to internal 3.3 V regulator
USB_VREGO	USB_VREGO							USB Decoupling for internal 3.3 V USB regulator and regulator output

5.19.3 GPIO Pinout Overview

The specific GPIO pins available in EFM32WG942 are shown in the following table. Each GPIO port is organized as 16-bit ports indicated by letters A through F, and the individual pin on this port is indicated by a number from 15 down to 0.

Table 5.57. GPIO Pinout

Port	Pin 15	Pin 14	Pin 13	Pin 12	Pin 11	Pin 10	Pin 9	Pin 8	Pin 7	Pin 6	Pin 5	Pin 4	Pin 3	Pin 2	Pin 1	Pin 0
Port A	—	PA14	PA13	PA12	—	—	—	—	—	—	PA5	PA4	PA3	PA2	PA1	PA0
Port B	—	PB14	PB13	—	PB11	—	—	PB8	PB7	PB6	PB5	PB4	PB3	—	—	—
Port C	—	—	—	—	—	—	—	—	PC7	PC6	PC5	PC4	—	—	—	—
Port D	—	—	—	—	—	—	—	PD8	PD7	PD6	PD5	PD4	PD3	PD2	PD1	PD0
Port E	PE15	PE14	PE13	PE12	PE11	PE10	PE9	PE8	PE7	PE6	PE5	PE4	—	—	—	—
Port F	—	—	—	PF12	PF11	PF10	—	—	—	—	PF5	—	—	PF2	PF1	PF0

5.19.4 Opamp Pinout Overview

The specific opamp terminals available in EFM32WG942 is shown in the following figure.

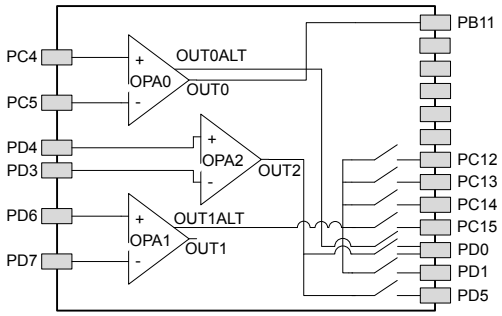

Figure 5.38. Opamp Pinout

5.20 EFM32WG980 (LQFP100)

5.20.1 Pinout

The EFM32WG980 pinout is shown in the following figure and table. Alternate locations are denoted by "#" followed by the location number (Multiple locations on the same pin are split with "/"). Alternate locations can be configured in the LOCATION bitfield in the *_ROUTE register in the module in question.

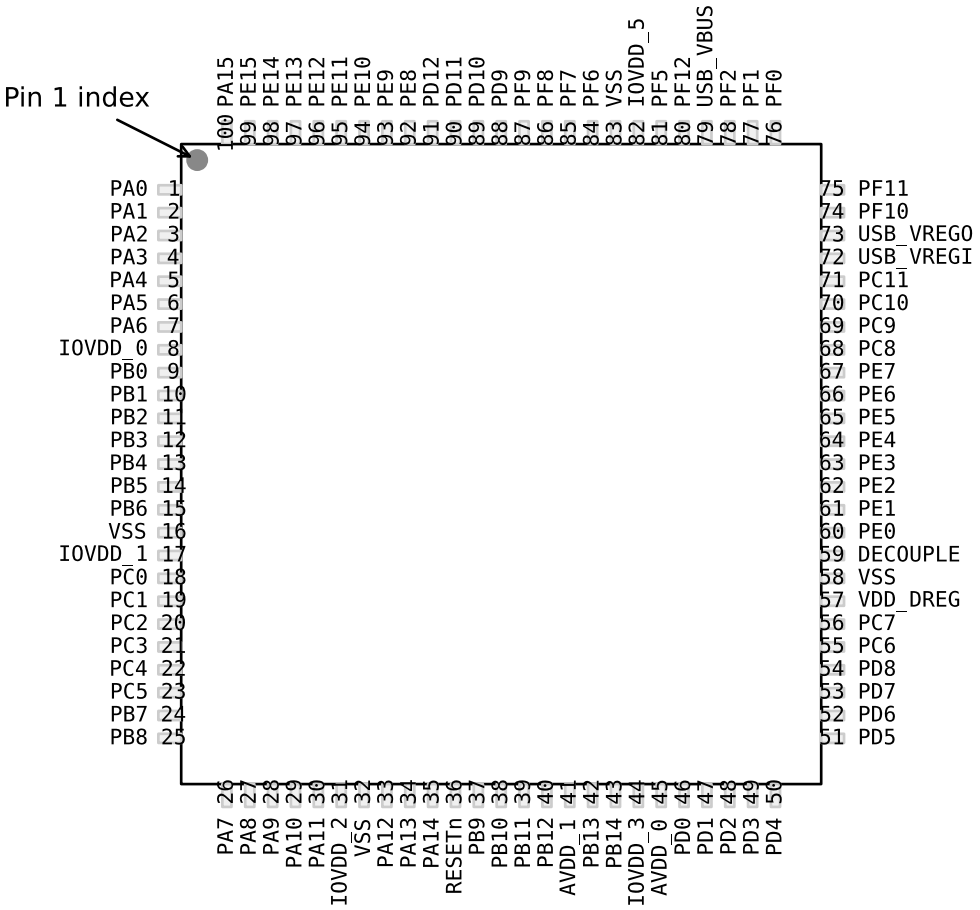

Figure 5.39. EFM32WG980 Pinout (top view, not to scale)

Table 5.58. Device Pinout

LQFP100 Pin# and Name		Pin Alternate Functionality / Description				
Pin #	Pin Name	Analog	EBI	Timers	Communication	Other
1	PA0	LCD_SEG13	EBI_AD09 #0/1/2	TIM0_CC0 #0/1/4	LEU0_RX #4 I2C0_SDA #0	PRS_CH0 #0 GPIO_EM4WU0
2	PA1	LCD_SEG14	EBI_AD10 #0/1/2	TIM0_CC1 #0/1	I2C0_SCL #0	CMU_CLK1 #0 PRS_CH1 #0
3	PA2	LCD_SEG15	EBI_AD11 #0/1/2	TIM0_CC2 #0/1		CMU_CLK0 #0 ETM_TD0 #3
4	PA3	LCD_SEG16	EBI_AD12 #0/1/2	TIM0_CDTI0 #0	U0_TX #2	LES_ALTEX2 #0 ETM_TD1 #3
5	PA4	LCD_SEG17	EBI_AD13 #0/1/2	TIM0_CDTI1 #0	U0_RX #2	LES_ALTEX3 #0 ETM_TD2 #3
6	PA5	LCD_SEG18	EBI_AD14 #0/1/2	TIM0_CDTI2 #0	LEU1_TX #1	LES_ALTEX4 #0 ETM_TD3 #3
7	PA6	LCD_SEG19	EBI_AD15 #0/1/2		LEU1_RX #1	ETM_TCLK #3 GPIO_EM4WU1
8	IOVDD_0	Digital IO power supply 0.				
9	PB0	LCD_SEG32	EBI_A16 #0/1/2	TIM1_CC0 #2		
10	PB1	LCD_SEG33	EBI_A17 #0/1/2	TIM1_CC1 #2		
11	PB2	LCD_SEG34	EBI_A18 #0/1/2	TIM1_CC2 #2		
12	PB3	LCD_SEG20/ LCD_COM4	EBI_A19 #0/1/2	PCNT1_S0IN #1	US2_TX #1	
13	PB4	LCD_SEG21/ LCD_COM5	EBI_A20 #0/1/2	PCNT1_S1IN #1	US2_RX #1	
14	PB5	LCD_SEG22/ LCD_COM6	EBI_A21 #0/1/2		US2_CLK #1	
15	PB6	LCD_SEG23/ LCD_COM7	EBI_A22 #0/1/2		US2_CS #1	
16	VSS	Ground.				
17	IOVDD_1	Digital IO power supply 1.				
18	PC0	ACMP0_CH0 DAC0_OUT0ALT #0/ OPAMP_OUT0ALT	EBI_A23 #0/1/2	TIM0_CC1 #4 PCNT0_S0IN #2	US0_TX #5 US1_TX #0 I2C0_SDA #4	LES_CH0 #0 PRS_CH2 #0
19	PC1	ACMP0_CH1 DAC0_OUT0ALT #1/ OPAMP_OUT0ALT	EBI_A24 #0/1/2	TIM0_CC2 #4 PCNT0_S1IN #2	US0_RX #5 US1_RX #0 I2C0_SCL #4	LES_CH1 #0 PRS_CH3 #0
20	PC2	ACMP0_CH2 DAC0_OUT0ALT #2/ OPAMP_OUT0ALT	EBI_A25 #0/1/2	TIM0_CDTI0 #4	US2_TX #0	LES_CH2 #0

LQFP100 Pin# and Name		Pin Alternate Functionality / Description				
Pin #	Pin Name	Analog	EBI	Timers	Communication	Other
21	PC3	ACMP0_CH3 DAC0_OUT0ALT #3/ OPAMP_OUT0ALT	EBI_NANDREn #0/1/2	TIM0_CDTI1 #4	US2_RX #0	LES_CH3 #0
22	PC4	ACMP0_CH4 / DAC0_P0 / OPAMP_P0	EBI_A26 #0/1/2	TIM0_CDTI2 #4 LE-TIM0_OUT0 #3 PCNT1_S0IN #0	US2_CLK #0 I2C1_SDA #0	LES_CH4 #0
23	PC5	ACMP0_CH5 / DAC0_N0 / OPAMP_N0	EBI_NANDWEn #0/1/2	LETIM0_OUT1 #3 PCNT1_S1IN #0	US2_CS #0 I2C1_SCL #0	LES_CH5 #0
24	PB7	LFXTAL_P		TIM1_CC0 #3	US0_TX #4 US1_CLK #0	
25	PB8	LFXTAL_N		TIM1_CC1 #3	US0_RX #4 US1_CS #0	
26	PA7	LCD_SEG35	EBI_CSTFT #0/1/2			
27	PA8	LCD_SEG36	EBI_DCLK #0/1/2	TIM2_CC0 #0		
28	PA9	LCD_SEG37	EBI_DTEN #0/1/2	TIM2_CC1 #0		
29	PA10	LCD_SEG38	EBI_VSNC #0/1/2	TIM2_CC2 #0		
30	PA11	LCD_SEG39	EBI_HSNC #0/1/2			
31	IOVDD_2	Digital IO power supply 2.				
32	VSS	Ground.				
33	PA12	LCD_BCAP_P	EBI_A00 #0/1/2	TIM2_CC0 #1		
34	PA13	LCD_BCAP_N	EBI_A01 #0/1/2	TIM2_CC1 #1		
35	PA14	LCD_BEXT	EBI_A02 #0/1/2	TIM2_CC2 #1		
36	RESETn	Reset input, active low. To apply an external reset source to this pin, it is required to only drive this pin low during reset, and let the internal pull-up ensure that reset is released.				
37	PB9		EBI_A03 #0/1/2		U1_TX #2	
38	PB10		EBI_A04 #0/1/2		U1_RX #2	
39	PB11	DAC0_OUT0 / OPAMP_OUT0		TIM1_CC2 #3 LE-TIM0_OUT0 #1	I2C1_SDA #1	
40	PB12	DAC0_OUT1 / OPAMP_OUT1		LETIM0_OUT1 #1	I2C1_SCL #1	
41	AVDD_1	Analog power supply 1.				
42	PB13	HFXTAL_P			US0_CLK #4/5 LEU0_TX #1	
43	PB14	HFXTAL_N			US0_CS #4/5 LEU0_RX #1	
44	IOVDD_3	Digital IO power supply 3.				
45	AVDD_0	Analog power supply 0.				

LQFP100 Pin# and Name		Pin Alternate Functionality / Description				
Pin #	Pin Name	Analog	EBI	Timers	Communication	Other
46	PD0	ADC0_CH0 DAC0_OUT0ALT #4/ OPAMP_OUT0ALT OPAMP_OUT2 #1		PCNT2_S0IN #0	US1_TX #1	
47	PD1	ADC0_CH1 DAC0_OUT1ALT #4/ OPAMP_OUT1ALT		TIM0_CC0 #3 PCNT2_S1IN #0	US1_RX #1	DBG_SWO #2
48	PD2	ADC0_CH2	EBI_A27 #0/1/2	TIM0_CC1 #3	USB_DMPU #0 US1_CLK #1	DBG_SWO #3
49	PD3	ADC0_CH3 OPAMP_N2		TIM0_CC2 #3	US1_CS #1	ETM_TD1 #0/2
50	PD4	ADC0_CH4 OPAMP_P2			LEU0_TX #0	ETM_TD2 #0/2
51	PD5	ADC0_CH5 OPAMP_OUT2 #0			LEU0_RX #0	ETM_TD3 #0/2
52	PD6	ADC0_CH6 / DAC0_P1 / OPAMP_P1		TIM1_CC0 #4 LE-TIM0_OUT0 #0 PCNT0_S0IN #3	US1_RX #2 I2C0_SDA #1	LES_ALTEX0 #0 ACMP0_O #2 ETM_TD0 #0
53	PD7	ADC0_CH7 / DAC0_N1 / OPAMP_N1		TIM1_CC1 #4 LE-TIM0_OUT1 #0 PCNT0_S1IN #3	US1_TX #2 I2C0_SCL #1	CMU_CLK0 #2 LES_ALTEX1 #0 ACMP1_O #2 ETM_TCLK #0
54	PD8	BU_VIN				CMU_CLK1 #1
55	PC6	ACMP0_CH6	EBI_A05 #0/1/2		LEU1_TX #0 I2C0_SDA #2	LES_CH6 #0 ETM_TCLK #2
56	PC7	ACMP0_CH7	EBI_A06 #0/1/2		LEU1_RX #0 I2C0_SCL #2	LES_CH7 #0 ETM_TD0 #2
57	VDD_DREG	Power supply for on-chip voltage regulator.				
58	VSS	Ground.				
59	DECOUPLE	Decouple output for on-chip voltage regulator. An external capacitance of size $C_{DECOUPLE}$ is required at this pin.				
60	PE0		EBI_A07 #0/1/2	TIM3_CC0 #1 PCNT0_S0IN #1	U0_TX #1 I2C1_SDA #2	
61	PE1		EBI_A08 #0/1/2	TIM3_CC1 #1 PCNT0_S1IN #1	U0_RX #1 I2C1_SCL #2	
62	PE2	BU_VOUT	EBI_A09 #0	TIM3_CC2 #1	U1_TX #3	ACMP0_O #1
63	PE3	BU_STAT	EBI_A10 #0		U1_RX #3	ACMP1_O #1
64	PE4	LCD_COM0	EBI_A11 #0/1/2		US0_CS #1	
65	PE5	LCD_COM1	EBI_A12 #0/1/2		US0_CLK #1	
66	PE6	LCD_COM2	EBI_A13 #0/1/2		US0_RX #1	
67	PE7	LCD_COM3	EBI_A14 #0/1/2		US0_TX #1	
68	PC8	ACMP1_CH0	EBI_A15 #0/1/2	TIM2_CC0 #2	US0_CS #2	LES_CH8 #0

LQFP100 Pin# and Name		Pin Alternate Functionality / Description				
Pin #	Pin Name	Analog	EBI	Timers	Communication	Other
69	PC9	ACMP1_CH1	EBI_A09 #1/2	TIM2_CC1 #2	US0_CLK #2	LES_CH9 #0 GPIO_EM4WU2
70	PC10	ACMP1_CH2	EBI_A10 #1/2	TIM2_CC2 #2	US0_RX #2	LES_CH10 #0
71	PC11	ACMP1_CH3	EBI_ALE #1/2		US0_TX #2	LES_CH11 #0
72	USB_VREGI	Input to internal 3.3V USB regulator				
73	USB_VREGO	Output and decoupling for internal 3.3V USB regulator				
74	PF10				U1_TX #1 USB_DM	
75	PF11				U1_RX #1 USB_DP	
76	PF0			TIM0_CC0 #5 LE-TIM0_OUT0 #2	US1_CLK #2 LEU0_TX #3 I2C0_SDA #5	DBG_SWCLK #0/1/2/3
77	PF1			TIM0_CC1 #5 LE-TIM0_OUT1 #2	US1_CS #2 LEU0_RX #3 I2C0_SCL #5	DBG_SWDIO #0/1/2/3 GPIO_EM4WU3
78	PF2	LCD_SEG0	EBI_ARDY #0/1/2	TIM0_CC2 #5	LEU0_TX #4	ACMP1_O #0 DBG_SWO #0 GPIO_EM4WU4
79	USB_VBUS	USB 5.0 V VBUS input.				
80	PF12				USB_ID	
81	PF5	LCD_SEG3	EBI_REn #0/2	TIM0_CDTI2 #2/5	USB_VBUSEN #0	PRS_CH2 #1
82	IOVDD_5	Digital IO power supply 5.				
83	VSS	Ground.				
84	PF6	LCD_SEG24	EBI_BL0 #0/1/2	TIM0_CC0 #2	U0_TX #0	
85	PF7	LCD_SEG25	EBI_BL1 #0/1/2	TIM0_CC1 #2	U0_RX #0	
86	PF8	LCD_SEG26	EBI_WEn #1	TIM0_CC2 #2		ETM_TCLK #1
87	PF9	LCD_SEG27	EBI_REn #1			ETM_TD0 #1
88	PD9	LCD_SEG28	EBI_CS0 #0/1/2			
89	PD10	LCD_SEG29	EBI_CS1 #0/1/2			
90	PD11	LCD_SEG30	EBI_CS2 #0/1/2			
91	PD12	LCD_SEG31	EBI_CS3 #0/1/2			
92	PE8	LCD_SEG4	EBI_AD00 #0/1/2	PCNT2_S0IN #1		PRS_CH3 #1
93	PE9	LCD_SEG5	EBI_AD01 #0/1/2	PCNT2_S1IN #1		
94	PE10	LCD_SEG6	EBI_AD02 #0/1/2	TIM1_CC0 #1	US0_TX #0	BOOT_TX
95	PE11	LCD_SEG7	EBI_AD03 #0/1/2	TIM1_CC1 #1	US0_RX #0	LES_ALTEX5 #0 BOOT_RX
96	PE12	LCD_SEG8	EBI_AD04 #0/1/2	TIM1_CC2 #1	US0_RX #3 US0_CLK #0 I2C0_SDA #6	CMU_CLK1 #2 LES_ALTEX6 #0

LQFP100 Pin# and Name		Pin Alternate Functionality / Description				
Pin #	Pin Name	Analog	EBI	Timers	Communication	Other
97	PE13	LCD_SEG9	EBI_AD05 #0/1/2		US0_TX #3 US0_CS #0 I2C0_SCL #6	LES_ALTEX7 #0 ACMP0_O #0 GPIO_EM4WU5
98	PE14	LCD_SEG10	EBI_AD06 #0/1/2	TIM3_CC0 #0	LEU0_TX #2	
99	PE15	LCD_SEG11	EBI_AD07 #0/1/2	TIM3_CC1 #0	LEU0_RX #2	
100	PA15	LCD_SEG12	EBI_AD08 #0/1/2	TIM3_CC2 #0		

5.20.2 Alternate Functionality Pinout

A wide selection of alternate functionality is available for multiplexing to various pins. This is shown in the following table. The table shows the name of the alternate functionality in the first column, followed by columns showing the possible LOCATION bitfield settings.

Note: Some functionality, such as analog interfaces, do not have alternate settings or a LOCATION bitfield. In these cases, the pinout is shown in the column corresponding to LOCATION 0.

Table 5.59. Alternate Functionality Overview

Alternate	LOCATION							
Functionality	0	1	2	3	4	5	6	Description
ACMP0_CH0	PC0							Analog comparator ACMP0, channel 0.
ACMP0_CH1	PC1							Analog comparator ACMP0, channel 1.
ACMP0_CH2	PC2							Analog comparator ACMP0, channel 2.
ACMP0_CH3	PC3							Analog comparator ACMP0, channel 3.
ACMP0_CH4	PC4							Analog comparator ACMP0, channel 4.
ACMP0_CH5	PC5							Analog comparator ACMP0, channel 5.
ACMP0_CH6	PC6							Analog comparator ACMP0, channel 6.
ACMP0_CH7	PC7							Analog comparator ACMP0, channel 7.
ACMP0_O	PE13	PE2	PD6					Analog comparator ACMP0, digital output.
ACMP1_CH0	PC8							Analog comparator ACMP1, channel 0.
ACMP1_CH1	PC9							Analog comparator ACMP1, channel 1.
ACMP1_CH2	PC10							Analog comparator ACMP1, channel 2.
ACMP1_CH3	PC11							Analog comparator ACMP1, channel 3.
ACMP1_O	PF2	PE3	PD7					Analog comparator ACMP1, digital output.
ADC0_CH0	PD0							Analog to digital converter ADC0, input channel number 0.
ADC0_CH1	PD1							Analog to digital converter ADC0, input channel number 1.
ADC0_CH2	PD2							Analog to digital converter ADC0, input channel number 2.
ADC0_CH3	PD3							Analog to digital converter ADC0, input channel number 3.
ADC0_CH4	PD4							Analog to digital converter ADC0, input channel number 4.
ADC0_CH5	PD5							Analog to digital converter ADC0, input channel number 5.
ADC0_CH6	PD6							Analog to digital converter ADC0, input channel number 6.
ADC0_CH7	PD7							Analog to digital converter ADC0, input channel number 7.
BOOT_RX	PE11							Bootloader RX.
BOOT_TX	PE10							Bootloader TX.

Alternate	LOCATION							
Functionality	0	1	2	3	4	5	6	Description
BU_STAT	PE3							Backup Power Domain status, whether or not the system is in backup mode
BU_VIN	PD8							Battery input for Backup Power Domain
BU_VOUT	PE2							Power output for Backup Power Domain
CMU_CLK0	PA2		PD7					Clock Management Unit, clock output number 0.
CMU_CLK1	PA1	PD8	PE12					Clock Management Unit, clock output number 1.
DAC0_OUT0 / OPAMP_OUT0	PB11							Digital to Analog Converter DAC0_OUT0 /OPAMP output channel number 0.
DAC0_OUT0ALT / OPAMP_OUT0ALT	PC0	PC1	PC2	PC3	PD0			Digital to Analog Converter DAC0_OUT0ALT / OPAMP alternative output for channel 0.
DAC0_OUT1 / OPAMP_OUT1	PB12							Digital to Analog Converter DAC0_OUT1 /OPAMP output channel number 1.
DAC0_OUT1ALT / OPAMP_OUT1ALT					PD1			Digital to Analog Converter DAC0_OUT1ALT / OPAMP alternative output for channel 1.
DBG_SWCLK	PF0	PF0	PF0	PF0				Debug-interface Serial Wire clock input. Note that this function is enabled to pin out of reset, and has a built-in pull down.
DBG_SWDIO	PF1	PF1	PF1	PF1				Debug-interface Serial Wire data input / output. Note that this function is enabled to pin out of reset, and has a built-in pull up.
DBG_SWO	PF2		PD1	PD2				Debug-interface Serial Wire viewer Output. Note that this function is not enabled after reset, and must be enabled by software to be used.
EBI_A00	PA12	PA12	PA12					External Bus Interface (EBI) address output pin 00.
EBI_A01	PA13	PA13	PA13					External Bus Interface (EBI) address output pin 01.
EBI_A02	PA14	PA14	PA14					External Bus Interface (EBI) address output pin 02.
EBI_A03	PB9	PB9	PB9					External Bus Interface (EBI) address output pin 03.
EBI_A04	PB10	PB10	PB10					External Bus Interface (EBI) address output pin 04.
EBI_A05	PC6	PC6	PC6					External Bus Interface (EBI) address output pin 05.
EBI_A06	PC7	PC7	PC7					External Bus Interface (EBI) address output pin 06.
EBI_A07	PE0	PE0	PE0					External Bus Interface (EBI) address output pin 07.
EBI_A08	PE1	PE1	PE1					External Bus Interface (EBI) address output pin 08.
EBI_A09	PE2	PC9	PC9					External Bus Interface (EBI) address output pin 09.
EBI_A10	PE3	PC10	PC10					External Bus Interface (EBI) address output pin 10.
EBI_A11	PE4	PE4	PE4					External Bus Interface (EBI) address output pin 11.
EBI_A12	PE5	PE5	PE5					External Bus Interface (EBI) address output pin 12.
EBI_A13	PE6	PE6	PE6					External Bus Interface (EBI) address output pin 13.
EBI_A14	PE7	PE7	PE7					External Bus Interface (EBI) address output pin 14.

Alternate	LOCATION							
Functionality	0	1	2	3	4	5	6	Description
EBI_A15	PC8	PC8	PC8					External Bus Interface (EBI) address output pin 15.
EBI_A16	PB0	PB0	PB0					External Bus Interface (EBI) address output pin 16.
EBI_A17	PB1	PB1	PB1					External Bus Interface (EBI) address output pin 17.
EBI_A18	PB2	PB2	PB2					External Bus Interface (EBI) address output pin 18.
EBI_A19	PB3	PB3	PB3					External Bus Interface (EBI) address output pin 19.
EBI_A20	PB4	PB4	PB4					External Bus Interface (EBI) address output pin 20.
EBI_A21	PB5	PB5	PB5					External Bus Interface (EBI) address output pin 21.
EBI_A22	PB6	PB6	PB6					External Bus Interface (EBI) address output pin 22.
EBI_A23	PC0	PC0	PC0					External Bus Interface (EBI) address output pin 23.
EBI_A24	PC1	PC1	PC1					External Bus Interface (EBI) address output pin 24.
EBI_A25	PC2	PC2	PC2					External Bus Interface (EBI) address output pin 25.
EBI_A26	PC4	PC4	PC4					External Bus Interface (EBI) address output pin 26.
EBI_A27	PD2	PD2	PD2					External Bus Interface (EBI) address output pin 27.
EBI_AD00	PE8	PE8	PE8					External Bus Interface (EBI) address and data input / output pin 00.
EBI_AD01	PE9	PE9	PE9					External Bus Interface (EBI) address and data input / output pin 01.
EBI_AD02	PE10	PE10	PE10					External Bus Interface (EBI) address and data input / output pin 02.
EBI_AD03	PE11	PE11	PE11					External Bus Interface (EBI) address and data input / output pin 03.
EBI_AD04	PE12	PE12	PE12					External Bus Interface (EBI) address and data input / output pin 04.
EBI_AD05	PE13	PE13	PE13					External Bus Interface (EBI) address and data input / output pin 05.
EBI_AD06	PE14	PE14	PE14					External Bus Interface (EBI) address and data input / output pin 06.
EBI_AD07	PE15	PE15	PE15					External Bus Interface (EBI) address and data input / output pin 07.
EBI_AD08	PA15	PA15	PA15					External Bus Interface (EBI) address and data input / output pin 08.
EBI_AD09	PA0	PA0	PA0					External Bus Interface (EBI) address and data input / output pin 09.
EBI_AD10	PA1	PA1	PA1					External Bus Interface (EBI) address and data input / output pin 10.
EBI_AD11	PA2	PA2	PA2					External Bus Interface (EBI) address and data input / output pin 11.
EBI_AD12	PA3	PA3	PA3					External Bus Interface (EBI) address and data input / output pin 12.
EBI_AD13	PA4	PA4	PA4					External Bus Interface (EBI) address and data input / output pin 13.

Alternate	LOCATION							
Functionality	0	1	2	3	4	5	6	Description
EBI_AD14	PA5	PA5	PA5					External Bus Interface (EBI) address and data input / output pin 14.
EBI_AD15	PA6	PA6	PA6					External Bus Interface (EBI) address and data input / output pin 15.
EBI_ALE		PC11	PC11					External Bus Interface (EBI) Address Latch Enable output.
EBI_ARDY	PF2	PF2	PF2					External Bus Interface (EBI) Hardware Ready Control input.
EBI_BL0	PF6	PF6	PF6					External Bus Interface (EBI) Byte Lane/Enable pin 0.
EBI_BL1	PF7	PF7	PF7					External Bus Interface (EBI) Byte Lane/Enable pin 1.
EBI_CS0	PD9	PD9	PD9					External Bus Interface (EBI) Chip Select output 0.
EBI_CS1	PD10	PD10	PD10					External Bus Interface (EBI) Chip Select output 1.
EBI_CS2	PD11	PD11	PD11					External Bus Interface (EBI) Chip Select output 2.
EBI_CS3	PD12	PD12	PD12					External Bus Interface (EBI) Chip Select output 3.
EBI_CSTFT	PA7	PA7	PA7					External Bus Interface (EBI) Chip Select output TFT.
EBI_DCLK	PA8	PA8	PA8					External Bus Interface (EBI) TFT Dot Clock pin.
EBI_DTEN	PA9	PA9	PA9					External Bus Interface (EBI) TFT Data Enable pin.
EBI_HSNC	PA11	PA11	PA11					External Bus Interface (EBI) TFT Horizontal Synchronization pin.
EBI_NANDREn	PC3	PC3	PC3					External Bus Interface (EBI) NAND Read Enable output.
EBI_NANDWEn	PC5	PC5	PC5					External Bus Interface (EBI) NAND Write Enable output.
EBI_REn	PF5	PF9	PF5					External Bus Interface (EBI) Read Enable output.
EBI_VSNC	PA10	PA10	PA10					External Bus Interface (EBI) TFT Vertical Synchronization pin.
EBI_WEn		PF8						External Bus Interface (EBI) Write Enable output.
ETM_TCLK	PD7	PF8	PC6	PA6				Embedded Trace Module ETM clock .
ETM_TD0	PD6	PF9	PC7	PA2				Embedded Trace Module ETM data 0.
ETM_TD1	PD3		PD3	PA3				Embedded Trace Module ETM data 1.
ETM_TD2	PD4		PD4	PA4				Embedded Trace Module ETM data 2.
ETM_TD3	PD5		PD5	PA5				Embedded Trace Module ETM data 3.
GPIO_EM4WU0	PA0							Pin can be used to wake the system up from EM4
GPIO_EM4WU1	PA6							Pin can be used to wake the system up from EM4
GPIO_EM4WU2	PC9							Pin can be used to wake the system up from EM4
GPIO_EM4WU3	PF1							Pin can be used to wake the system up from EM4
GPIO_EM4WU4	PF2							Pin can be used to wake the system up from EM4
GPIO_EM4WU5	PE13							Pin can be used to wake the system up from EM4

Alternate	LOCATION							
Functionality	0	1	2	3	4	5	6	Description
HFXTAL_N	PB14							High Frequency Crystal negative pin. Also used as external optional clock input pin.
HFXTAL_P	PB13							High Frequency Crystal positive pin.
I2C0_SCL	PA1	PD7	PC7		PC1	PF1	PE13	I2C0 Serial Clock Line input / output.
I2C0_SDA	PA0	PD6	PC6		PC0	PF0	PE12	I2C0 Serial Data input / output.
I2C1_SCL	PC5	PB12	PE1					I2C1 Serial Clock Line input / output.
I2C1_SDA	PC4	PB11	PE0					I2C1 Serial Data input / output.
LCD_BCAP_N	PA13							LCD voltage booster (optional), boost capacitor, negative pin. If using the LCD voltage booster, connect a 22 nF capacitor between LCD_BCAP_N and LCD_BCAP_P.
LCD_BCAP_P	PA12							LCD voltage booster (optional), boost capacitor, positive pin. If using the LCD voltage booster, connect a 22 nF capacitor between LCD_BCAP_N and LCD_BCAP_P.
LCD_BEXT	PA14							LCD voltage booster (optional), boost output. If using the LCD voltage booster, connect a 1 uF capacitor between this pin and VSS. An external LCD voltage may also be applied to this pin if the booster is not enabled. If AVDD is used directly as the LCD supply voltage, this pin may be left unconnected or used as a GPIO.
LCD_COM0	PE4							LCD driver common line number 0.
LCD_COM1	PE5							LCD driver common line number 1.
LCD_COM2	PE6							LCD driver common line number 2.
LCD_COM3	PE7							LCD driver common line number 3.
LCD_SEG0	PF2							LCD segment line 0. Segments 0, 1, 2 and 3 are controlled by SEGEN0.
LCD_SEG3	PF5							LCD segment line 3. Segments 0, 1, 2 and 3 are controlled by SEGEN0.
LCD_SEG4	PE8							LCD segment line 4. Segments 4, 5, 6 and 7 are controlled by SEGEN1.
LCD_SEG5	PE9							LCD segment line 5. Segments 4, 5, 6 and 7 are controlled by SEGEN1.
LCD_SEG6	PE10							LCD segment line 6. Segments 4, 5, 6 and 7 are controlled by SEGEN1.
LCD_SEG7	PE11							LCD segment line 7. Segments 4, 5, 6 and 7 are controlled by SEGEN1.
LCD_SEG8	PE12							LCD segment line 8. Segments 8, 9, 10 and 11 are controlled by SEGEN2.
LCD_SEG9	PE13							LCD segment line 9. Segments 8, 9, 10 and 11 are controlled by SEGEN2.
LCD_SEG10	PE14							LCD segment line 10. Segments 8, 9, 10 and 11 are controlled by SEGEN2.

Alternate	LOCATION							
Functionality	0	1	2	3	4	5	6	Description
LCD_SEG11	PE15							LCD segment line 11. Segments 8, 9, 10 and 11 are controlled by SEGEN2.
LCD_SEG12	PA15							LCD segment line 12. Segments 12, 13, 14 and 15 are controlled by SEGEN3.
LCD_SEG13	PA0							LCD segment line 13. Segments 12, 13, 14 and 15 are controlled by SEGEN3.
LCD_SEG14	PA1							LCD segment line 14. Segments 12, 13, 14 and 15 are controlled by SEGEN3.
LCD_SEG15	PA2							LCD segment line 15. Segments 12, 13, 14 and 15 are controlled by SEGEN3.
LCD_SEG16	PA3							LCD segment line 16. Segments 16, 17, 18 and 19 are controlled by SEGEN4.
LCD_SEG17	PA4							LCD segment line 17. Segments 16, 17, 18 and 19 are controlled by SEGEN4.
LCD_SEG18	PA5							LCD segment line 18. Segments 16, 17, 18 and 19 are controlled by SEGEN4.
LCD_SEG19	PA6							LCD segment line 19. Segments 16, 17, 18 and 19 are controlled by SEGEN4.
LCD_SEG20/ LCD_COM4	PB3							LCD segment line 20. Segments 20, 21, 22 and 23 are controlled by SEGEN5. This pin may also be used as LCD COM line 4
LCD_SEG21/ LCD_COM5	PB4							LCD segment line 21. Segments 20, 21, 22 and 23 are controlled by SEGEN5. This pin may also be used as LCD COM line 5
LCD_SEG22/ LCD_COM6	PB5							LCD segment line 22. Segments 20, 21, 22 and 23 are controlled by SEGEN5. This pin may also be used as LCD COM line 6
LCD_SEG23/ LCD_COM7	PB6							LCD segment line 23. Segments 20, 21, 22 and 23 are controlled by SEGEN5. This pin may also be used as LCD COM line 7
LCD_SEG24	PF6							LCD segment line 24. Segments 24, 25, 26 and 27 are controlled by SEGEN6.
LCD_SEG25	PF7							LCD segment line 25. Segments 24, 25, 26 and 27 are controlled by SEGEN6.
LCD_SEG26	PF8							LCD segment line 26. Segments 24, 25, 26 and 27 are controlled by SEGEN6.
LCD_SEG27	PF9							LCD segment line 27. Segments 24, 25, 26 and 27 are controlled by SEGEN6.
LCD_SEG28	PD9							LCD segment line 28. Segments 28, 29, 30 and 31 are controlled by SEGEN7.
LCD_SEG29	PD10							LCD segment line 29. Segments 28, 29, 30 and 31 are controlled by SEGEN7.
LCD_SEG30	PD11							LCD segment line 30. Segments 28, 29, 30 and 31 are controlled by SEGEN7.
LCD_SEG31	PD12							LCD segment line 31. Segments 28, 29, 30 and 31 are controlled by SEGEN7.

Alternate	LOCATION							
Functionality	0	1	2	3	4	5	6	Description
LCD_SEG32	PB0							LCD segment line 32. Segments 32, 33, 34 and 35 are controlled by SEGEN8.
LCD_SEG33	PB1							LCD segment line 33. Segments 32, 33, 34 and 35 are controlled by SEGEN8.
LCD_SEG34	PB2							LCD segment line 34. Segments 32, 33, 34 and 35 are controlled by SEGEN8.
LCD_SEG35	PA7							LCD segment line 35. Segments 32, 33, 34 and 35 are controlled by SEGEN8.
LCD_SEG36	PA8							LCD segment line 36. Segments 36, 37, 38 and 39 are controlled by SEGEN9.
LCD_SEG37	PA9							LCD segment line 37. Segments 36, 37, 38 and 39 are controlled by SEGEN9.
LCD_SEG38	PA10							LCD segment line 38. Segments 36, 37, 38 and 39 are controlled by SEGEN9.
LCD_SEG39	PA11							LCD segment line 39. Segments 36, 37, 38 and 39 are controlled by SEGEN9.
LES_ALTEX0	PD6							LESENSE alternate exite output 0.
LES_ALTEX1	PD7							LESENSE alternate exite output 1.
LES_ALTEX2	PA3							LESENSE alternate exite output 2.
LES_ALTEX3	PA4							LESENSE alternate exite output 3.
LES_ALTEX4	PA5							LESENSE alternate exite output 4.
LES_ALTEX5	PE11							LESENSE alternate exite output 5.
LES_ALTEX6	PE12							LESENSE alternate exite output 6.
LES_ALTEX7	PE13							LESENSE alternate exite output 7.
LES_CH0	PC0							LESENSE channel 0.
LES_CH1	PC1							LESENSE channel 1.
LES_CH2	PC2							LESENSE channel 2.
LES_CH3	PC3							LESENSE channel 3.
LES_CH4	PC4							LESENSE channel 4.
LES_CH5	PC5							LESENSE channel 5.
LES_CH6	PC6							LESENSE channel 6.
LES_CH7	PC7							LESENSE channel 7.
LES_CH8	PC8							LESENSE channel 8.
LES_CH9	PC9							LESENSE channel 9.
LES_CH10	PC10							LESENSE channel 10.
LES_CH11	PC11							LESENSE channel 11.
LETIM0_OUT0	PD6	PB11	PF0	PC4				Low Energy Timer LETIM0, output channel 0.
LETIM0_OUT1	PD7	PB12	PF1	PC5				Low Energy Timer LETIM0, output channel 1.
LEU0_RX	PD5	PB14	PE15	PF1	PA0			LEUART0 Receive input.

Alternate	LOCATION							
Functionality	0	1	2	3	4	5	6	Description
LEU0_TX	PD4	PB13	PE14	PF0	PF2			LEUART0 Transmit output. Also used as receive input in half duplex communication.
LEU1_RX	PC7	PA6						LEUART1 Receive input.
LEU1_TX	PC6	PA5						LEUART1 Transmit output. Also used as receive input in half duplex communication.
LFXTAL_N	PB8							Low Frequency Crystal (typically 32.768 kHz) negative pin. Also used as an optional external clock input pin.
LFXTAL_P	PB7							Low Frequency Crystal (typically 32.768 kHz) positive pin.
OPAMP_N0 / DAC0_N0	PC5							Operational Amplifier 0 external negative input.
OPAMP_N1 / DAC0_N1	PD7							Operational Amplifier 1 external negative input.
OPAMP_N2	PD3							Operational Amplifier 2 external negative input.
OPAMP_OUT2	PD5	PD0						Operational Amplifier 2 output.
OPAMP_P0 / DAC0_P0	PC4							Operational Amplifier 0 external positive input.
OPAMP_P1 / DAC0_P1	PD6							Operational Amplifier 1 external positive input.
OPAMP_P2	PD4							Operational Amplifier 2 external positive input.
PCNT0_S0IN		PE0	PC0	PD6				Pulse Counter PCNT0 input number 0.
PCNT0_S1IN		PE1	PC1	PD7				Pulse Counter PCNT0 input number 1.
PCNT1_S0IN	PC4	PB3						Pulse Counter PCNT1 input number 0.
PCNT1_S1IN	PC5	PB4						Pulse Counter PCNT1 input number 1.
PCNT2_S0IN	PD0	PE8						Pulse Counter PCNT2 input number 0.
PCNT2_S1IN	PD1	PE9						Pulse Counter PCNT2 input number 1.
PRS_CH0	PA0							Peripheral Reflex System PRS, channel 0.
PRS_CH1	PA1							Peripheral Reflex System PRS, channel 1.
PRS_CH2	PC0	PF5						Peripheral Reflex System PRS, channel 2.
PRS_CH3	PC1	PE8						Peripheral Reflex System PRS, channel 3.
TIM0_CC0	PA0	PA0	PF6	PD1	PA0	PF0		Timer 0 Capture Compare input / output channel 0.
TIM0_CC1	PA1	PA1	PF7	PD2	PC0	PF1		Timer 0 Capture Compare input / output channel 1.
TIM0_CC2	PA2	PA2	PF8	PD3	PC1	PF2		Timer 0 Capture Compare input / output channel 2.
TIM0_CDTI0	PA3				PC2			Timer 0 Complimentary Dead Time Insertion channel 0.
TIM0_CDTI1	PA4				PC3			Timer 0 Complimentary Dead Time Insertion channel 1.
TIM0_CDTI2	PA5		PF5		PC4	PF5		Timer 0 Complimentary Dead Time Insertion channel 2.
TIM1_CC0		PE10	PB0	PB7	PD6			Timer 1 Capture Compare input / output channel 0.

Alternate	LOCATION							
Functionality	0	1	2	3	4	5	6	Description
TIM1_CC1		PE11	PB1	PB8	PD7			Timer 1 Capture Compare input / output channel 1.
TIM1_CC2		PE12	PB2	PB11				Timer 1 Capture Compare input / output channel 2.
TIM2_CC0	PA8	PA12	PC8					Timer 2 Capture Compare input / output channel 0.
TIM2_CC1	PA9	PA13	PC9					Timer 2 Capture Compare input / output channel 1.
TIM2_CC2	PA10	PA14	PC10					Timer 2 Capture Compare input / output channel 2.
TIM3_CC0	PE14	PE0						Timer 3 Capture Compare input / output channel 0.
TIM3_CC1	PE15	PE1						Timer 3 Capture Compare input / output channel 1.
TIM3_CC2	PA15	PE2						Timer 3 Capture Compare input / output channel 2.
U0_RX	PF7	PE1	PA4					UART0 Receive input.
U0_TX	PF6	PE0	PA3					UART0 Transmit output. Also used as receive input in half duplex communication.
U1_RX		PF11	PB10	PE3				UART1 Receive input.
U1_TX		PF10	PB9	PE2				UART1 Transmit output. Also used as receive input in half duplex communication.
US0_CLK	PE12	PE5	PC9		PB13	PB13		USART0 clock input / output.
US0_CS	PE13	PE4	PC8		PB14	PB14		USART0 chip select input / output.
US0_RX	PE11	PE6	PC10	PE12	PB8	PC1		USART0 Asynchronous Receive. USART0 Synchronous mode Main Input / Secondary Output (MISO).
US0_TX	PE10	PE7	PC11	PE13	PB7	PC0		USART0 Asynchronous Transmit.Also used as receive input in half duplex communication. USART0 Synchronous mode Main Output / Secondary Input (MOSI).
US1_CLK	PB7	PD2	PF0					USART1 clock input / output.
US1_CS	PB8	PD3	PF1					USART1 chip select input / output.
US1_RX	PC1	PD1	PD6					USART1 Asynchronous Receive. USART1 Synchronous mode Main Input / Secondary Output (MISO).
US1_TX	PC0	PD0	PD7					USART1 Asynchronous Transmit.Also used as receive input in half duplex communication. USART1 Synchronous mode Main Output / Secondary Input (MOSI).
US2_CLK	PC4	PB5						USART2 clock input / output.
US2_CS	PC5	PB6						USART2 chip select input / output.
US2_RX	PC3	PB4						USART2 Asynchronous Receive. USART2 Synchronous mode Main Input / Secondary Output (MISO).

Alternate	LOCATION							
Functionality	0	1	2	3	4	5	6	Description
US2_TX	PC2	PB3						USART2 Asynchronous Transmit.Also used as receive input in half duplex communication. USART2 Synchronous mode Main Output / Secondary Input (MOSI).
USB_DM	PF10							USB D- pin.
USB_DMPU	PD2							USB D- Pullup control.
USB_DP	PF11							USB D+ pin.
USB_ID	PF12							USB ID pin. Used in OTG mode.
USB_VBUS	USB_VBUS							USB 5 V VBUS input.
USB_VBUSEN	PF5							USB 5 V VBUS enable.
USB_VREGI	USB_VREGI							USB Input to internal 3.3 V regulator
USB_VREGO	USB_VREGO							USB Decoupling for internal 3.3 V USB regulator and regulator output

5.20.3 GPIO Pinout Overview

The specific GPIO pins available in EFM32WG980 are shown in the following table. Each GPIO port is organized as 16-bit ports indicated by letters A through F, and the individual pin on this port is indicated by a number from 15 down to 0.

Table 5.60. GPIO Pinout

Port	Pin 15	Pin 14	Pin 13	Pin 12	Pin 11	Pin 10	Pin 9	Pin 8	Pin 7	Pin 6	Pin 5	Pin 4	Pin 3	Pin 2	Pin 1	Pin 0
Port A	PA15	PA14	PA13	PA12	PA11	PA10	PA9	PA8	PA7	PA6	PA5	PA4	PA3	PA2	PA1	PA0
Port B	—	PB14	PB13	PB12	PB11	PB10	PB9	PB8	PB7	PB6	PB5	PB4	PB3	PB2	PB1	PB0
Port C	—	—	—	—	PC11	PC10	PC9	PC8	PC7	PC6	PC5	PC4	PC3	PC2	PC1	PC0
Port D	—	—	—	PD12	PD11	PD10	PD9	PD8	PD7	PD6	PD5	PD4	PD3	PD2	PD1	PD0
Port E	PE15	PE14	PE13	PE12	PE11	PE10	PE9	PE8	PE7	PE6	PE5	PE4	PE3	PE2	PE1	PE0
Port F	—	—	—	PF12	PF11	PF10	PF9	PF8	PF7	PF6	PF5	—	—	PF2	PF1	PF0

5.20.4 Opamp Pinout Overview

The specific opamp terminals available in EFM32WG980 is shown in the following figure.

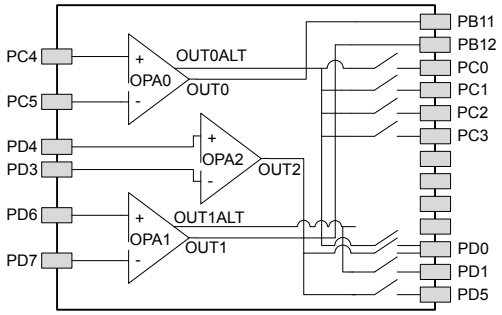

Figure 5.40. Opamp Pinout

5.21 EFM32WG990 (BGA112)

5.21.1 Pinout

The EFM32WG990 pinout is shown in the following figure and table. Alternate locations are denoted by "#" followed by the location number (Multiple locations on the same pin are split with "/"). Alternate locations can be configured in the LOCATION bitfield in the *_ROUTE register in the module in question.

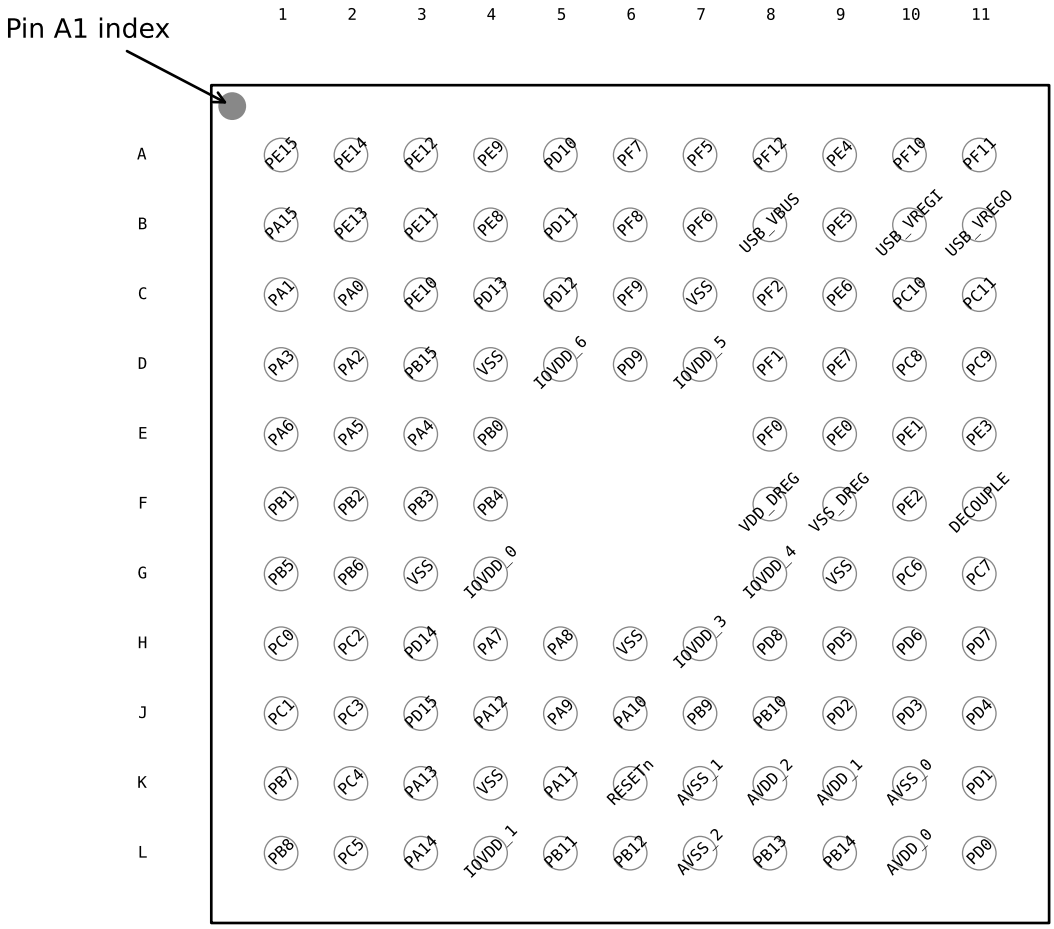

Figure 5.41. EFM32WG990 Pinout (top view, not to scale)

Table 5.61. Device Pinout

BGA112 Pin# and Name		Pin Alternate Functionality / Description				
Pin #	Pin Name	Analog	EBI	Timers	Communication	Other
A1	PE15	LCD_SEG11	EBI_AD07 #0/1/2	TIM3_CC1 #0	LEU0_RX #2	
A2	PE14	LCD_SEG10	EBI_AD06 #0/1/2	TIM3_CC0 #0	LEU0_TX #2	
A3	PE12	LCD_SEG8	EBI_AD04 #0/1/2	TIM1_CC2 #1	US0_RX #3 US0_CLK #0 I2C0_SDA #6	CMU_CLK1 #2 LES_ALTEX6 #0

BGA112 Pin# and Name		Pin Alternate Functionality / Description				
Pin #	Pin Name	Analog	EBI	Timers	Communication	Other
A4	PE9	LCD_SEG5	EBI_AD01 #0/1/2	PCNT2_S1IN #1		
A5	PD10	LCD_SEG29	EBI_CS1 #0/1/2			
A6	PF7	LCD_SEG25	EBI_BL1 #0/1/2	TIM0_CC1 #2	U0_RX #0	
A7	PF5	LCD_SEG3	EBI_REn #0/2	TIM0_CDTI2 #2/5	USB_VBUSEN #0	PRS_CH2 #1
A8	PF12				USB_ID	
A9	PE4	LCD_COM0	EBI_A11 #0/1/2		US0_CS #1	
A10	PF10				U1_TX #1 USB_DM	
A11	PF11				U1_RX #1 USB_DP	
B1	PA15	LCD_SEG12	EBI_AD08 #0/1/2	TIM3_CC2 #0		
B2	PE13	LCD_SEG9	EBI_AD05 #0/1/2		US0_TX #3 US0_CS #0 I2C0_SCL #6	LES_ALTEX7 #0 ACMP0_O #0 GPIO_EM4WU5
B3	PE11	LCD_SEG7	EBI_AD03 #0/1/2	TIM1_CC1 #1	US0_RX #0	LES_ALTEX5 #0 BOOT_RX
B4	PE8	LCD_SEG4	EBI_AD00 #0/1/2	PCNT2_S0IN #1		PRS_CH3 #1
B5	PD11	LCD_SEG30	EBI_CS2 #0/1/2			
B6	PF8	LCD_SEG26	EBI_WEn #1	TIM0_CC2 #2		ETM_TCLK #1
B7	PF6	LCD_SEG24	EBI_BL0 #0/1/2	TIM0_CC0 #2	U0_TX #0	
B8	USB_VBUS	USB 5.0 V VBUS input.				
B9	PE5	LCD_COM1	EBI_A12 #0/1/2		US0_CLK #1	
B10	USB_VREGI	Input to internal 3.3V USB regulator				
B11	USB_VREGO	Output and decoupling for internal 3.3V USB regulator				
C1	PA1	LCD_SEG14	EBI_AD10 #0/1/2	TIM0_CC1 #0/1	I2C0_SCL #0	CMU_CLK1 #0 PRS_CH1 #0
C2	PA0	LCD_SEG13	EBI_AD09 #0/1/2	TIM0_CC0 #0/1/4	LEU0_RX #4 I2C0_SDA #0	PRS_CH0 #0 GPIO_EM4WU0
C3	PE10	LCD_SEG6	EBI_AD02 #0/1/2	TIM1_CC0 #1	US0_TX #0	BOOT_TX
C4	PD13					ETM_TD1 #1
C5	PD12	LCD_SEG31	EBI_CS3 #0/1/2			
C6	PF9	LCD_SEG27	EBI_REn #1			ETM_TD0 #1
C7	VSS	Ground.				
C8	PF2	LCD_SEG0	EBI_ARDY #0/1/2	TIM0_CC2 #5	LEU0_TX #4	ACMP1_O #0 DBG_SWO #0 GPIO_EM4WU4
C9	PE6	LCD_COM2	EBI_A13 #0/1/2		US0_RX #1	
C10	PC10	ACMP1_CH2	EBI_A10 #1/2	TIM2_CC2 #2	US0_RX #2	LES_CH10 #0
C11	PC11	ACMP1_CH3	EBI_ALE #1/2		US0_TX #2	LES_CH11 #0
D1	PA3	LCD_SEG16	EBI_AD12 #0/1/2	TIM0_CDTI0 #0	U0_TX #2	LES_ALTEX2 #0 ETM_TD1 #3

BGA112 Pin# and Name		Pin Alternate Functionality / Description				
Pin #	Pin Name	Analog	EBI	Timers	Communication	Other
D2	PA2	LCD_SEG15	EBI_AD11 #0/1/2	TIM0_CC2 #0/1		CMU_CLK0 #0 ETM_TD0 #3
D3	PB15					ETM_TD2 #1
D4	VSS	Ground.				
D5	IOVDD_6	Digital IO power supply 6.				
D6	PD9	LCD_SEG28	EBI_CS0 #0/1/2			
D7	IOVDD_5	Digital IO power supply 5.				
D8	PF1			TIM0_CC1 #5 LE-TIM0_OUT1 #2	US1_CS #2 LEU0_RX #3 I2C0_SCL #5	DBG_SWDIO #0/1/2/3 GPIO_EM4WU3
D9	PE7	LCD_COM3	EBI_A14 #0/1/2		US0_TX #1	
D10	PC8	ACMP1_CH0	EBI_A15 #0/1/2	TIM2_CC0 #2	US0_CS #2	LES_CH8 #0
D11	PC9	ACMP1_CH1	EBI_A09 #1/2	TIM2_CC1 #2	US0_CLK #2	LES_CH9 #0 GPIO_EM4WU2
E1	PA6	LCD_SEG19	EBI_AD15 #0/1/2		LEU1_RX #1	ETM_TCLK #3 GPIO_EM4WU1
E2	PA5	LCD_SEG18	EBI_AD14 #0/1/2	TIM0_CDTI2 #0	LEU1_TX #1	LES_ALTEX4 #0 ETM_TD3 #3
E3	PA4	LCD_SEG17	EBI_AD13 #0/1/2	TIM0_CDTI1 #0	U0_RX #2	LES_ALTEX3 #0 ETM_TD2 #3
E4	PB0	LCD_SEG32	EBI_A16 #0/1/2	TIM1_CC0 #2		
E8	PF0			TIM0_CC0 #5 LE-TIM0_OUT0 #2	US1_CLK #2 LEU0_TX #3 I2C0_SDA #5	DBG_SWCLK #0/1/2/3
E9	PE0		EBI_A07 #0/1/2	TIM3_CC0 #1 PCNT0_S0IN #1	U0_TX #1 I2C1_SDA #2	
E10	PE1		EBI_A08 #0/1/2	TIM3_CC1 #1 PCNT0_S1IN #1	U0_RX #1 I2C1_SCL #2	
E11	PE3	BU_STAT	EBI_A10 #0		U1_RX #3	ACMP1_O #1
F1	PB1	LCD_SEG33	EBI_A17 #0/1/2	TIM1_CC1 #2		
F2	PB2	LCD_SEG34	EBI_A18 #0/1/2	TIM1_CC2 #2		
F3	PB3	LCD_SEG20/ LCD_COM4	EBI_A19 #0/1/2	PCNT1_S0IN #1	US2_TX #1	
F4	PB4	LCD_SEG21/ LCD_COM5	EBI_A20 #0/1/2	PCNT1_S1IN #1	US2_RX #1	
F8	VDD_DREG	Power supply for on-chip voltage regulator.				
F9	VSS_DREG	Ground for on-chip voltage regulator.				
F10	PE2	BU_VOUT	EBI_A09 #0	TIM3_CC2 #1	U1_TX #3	ACMP0_O #1
F11	DECOUPLE	Decouple output for on-chip voltage regulator. An external capacitance of size $C_{DECOUPLE}$ is required at this pin.				
G1	PB5	LCD_SEG22/ LCD_COM6	EBI_A21 #0/1/2		US2_CLK #1	

BGA112 Pin# and Name		Pin Alternate Functionality / Description				
Pin #	Pin Name	Analog	EBI	Timers	Communication	Other
G2	PB6	LCD_SEG23/ LCD_COM7	EBI_A22 #0/1/2		US2_CS #1	
G3	VSS	Ground.				
G4	IOVDD_0	Digital IO power supply 0.				
G8	IOVDD_4	Digital IO power supply 4.				
G9	VSS	Ground.				
G10	PC6	ACMP0_CH6	EBI_A05 #0/1/2		LEU1_TX #0 I2C0_SDA #2	LES_CH6 #0 ETM_TCLK #2
G11	PC7	ACMP0_CH7	EBI_A06 #0/1/2		LEU1_RX #0 I2C0_SCL #2	LES_CH7 #0 ETM_TD0 #2
H1	PC0	ACMP0_CH0 DAC0_OUT0ALT #0/ OPAMP_OUT0ALT	EBI_A23 #0/1/2	TIM0_CC1 #4 PCNT0_S0IN #2	US0_TX #5 US1_TX #0 I2C0_SDA #4	LES_CH0 #0 PRS_CH2 #0
H2	PC2	ACMP0_CH2 DAC0_OUT0ALT #2/ OPAMP_OUT0ALT	EBI_A25 #0/1/2	TIM0_CDTI0 #4	US2_TX #0	LES_CH2 #0
H3	PD14				I2C0_SDA #3	
H4	PA7	LCD_SEG35	EBI_CSTFT #0/1/2			
H5	PA8	LCD_SEG36	EBI_DCLK #0/1/2	TIM2_CC0 #0		
H6	VSS	Ground.				
H7	IOVDD_3	Digital IO power supply 3.				
H8	PD8	BU_VIN				CMU_CLK1 #1
H9	PD5	ADC0_CH5 OPAMP_OUT2 #0			LEU0_RX #0	ETM_TD3 #0/2
H10	PD6	ADC0_CH6 / DAC0_P1 / OPAMP_P1		TIM1_CC0 #4 LE-TIM0_OUT0 #0 PCNT0_S0IN #3	US1_RX #2 I2C0_SDA #1	LES_ALTEX0 #0 ACMP0_O #2 ETM_TD0 #0
H11	PD7	ADC0_CH7 / DAC0_N1 / OPAMP_N1		TIM1_CC1 #4 LE-TIM0_OUT1 #0 PCNT0_S1IN #3	US1_TX #2 I2C0_SCL #1	CMU_CLK0 #2 LES_ALTEX1 #0 ACMP1_O #2 ETM_TCLK #0
J1	PC1	ACMP0_CH1 DAC0_OUT0ALT #1/ OPAMP_OUT0ALT	EBI_A24 #0/1/2	TIM0_CC2 #4 PCNT0_S1IN #2	US0_RX #5 US1_RX #0 I2C0_SCL #4	LES_CH1 #0 PRS_CH3 #0
J2	PC3	ACMP0_CH3 DAC0_OUT0ALT #3/ OPAMP_OUT0ALT	EBI_NANDREn #0/1/2	TIM0_CDTI1 #4	US2_RX #0	LES_CH3 #0
J3	PD15				I2C0_SCL #3	
J4	PA12	LCD_BCAP_P	EBI_A00 #0/1/2	TIM2_CC0 #1		
J5	PA9	LCD_SEG37	EBI_DTEN #0/1/2	TIM2_CC1 #0		

BGA112 Pin# and Name		Pin Alternate Functionality / Description				
Pin #	Pin Name	Analog	EBI	Timers	Communication	Other
J6	PA10	LCD_SEG38	EBI_VSNC #0/1/2	TIM2_CC2 #0		
J7	PB9		EBI_A03 #0/1/2		U1_TX #2	
J8	PB10		EBI_A04 #0/1/2		U1_RX #2	
J9	PD2	ADC0_CH2	EBI_A27 #0/1/2	TIM0_CC1 #3	USB_DMPU #0 US1_CLK #1	DBG_SWO #3
J10	PD3	ADC0_CH3 OPAMP_N2		TIM0_CC2 #3	US1_CS #1	ETM_TD1 #0/2
J11	PD4	ADC0_CH4 OPAMP_P2			LEU0_TX #0	ETM_TD2 #0/2
K1	PB7	LFXTAL_P		TIM1_CC0 #3	US0_TX #4 US1_CLK #0	
K2	PC4	ACMP0_CH4 / DAC0_P0 / OPAMP_P0	EBI_A26 #0/1/2	TIM0_CDTI2 #4 LE-TIM0_OUT0 #3 PCNT1_S0IN #0	US2_CLK #0 I2C1_SDA #0	LES_CH4 #0
K3	PA13	LCD_BCAP_N	EBI_A01 #0/1/2	TIM2_CC1 #1		
K4	VSS	Ground.				
K5	PA11	LCD_SEG39	EBI_HSNC #0/1/2			
K6	RESETn	Reset input, active low. To apply an external reset source to this pin, it is required to only drive this pin low during reset, and let the internal pull-up ensure that reset is released.				
K7	AVSS_1	Analog ground 1.				
K8	AVDD_2	Analog power supply 2.				
K9	AVDD_1	Analog power supply 1.				
K10	AVSS_0	Analog ground 0.				
K11	PD1	ADC0_CH1 DAC0_OUT1ALT #4/ OPAMP_OUT1ALT		TIM0_CC0 #3 PCNT2_S1IN #0	US1_RX #1	DBG_SWO #2
L1	PB8	LFXTAL_N		TIM1_CC1 #3	US0_RX #4 US1_CS #0	
L2	PC5	ACMP0_CH5 / DAC0_N0 / OPAMP_N0	EBI_NANDWEn #0/1/2	LETIM0_OUT1 #3 PCNT1_S1IN #0	US2_CS #0 I2C1_SCL #0	LES_CH5 #0
L3	PA14	LCD_BEXT	EBI_A02 #0/1/2	TIM2_CC2 #1		
L4	IOVDD_1	Digital IO power supply 1.				
L5	PB11	DAC0_OUT0 / OPAMP_OUT0		TIM1_CC2 #3 LE-TIM0_OUT0 #1	I2C1_SDA #1	
L6	PB12	DAC0_OUT1 / OPAMP_OUT1		LETIM0_OUT1 #1	I2C1_SCL #1	
L7	AVSS_2	Analog ground 2.				
L8	PB13	HFXTAL_P			US0_CLK #4/5 LEU0_TX #1	

BGA112 Pin# and Name		Pin Alternate Functionality / Description				
Pin #	Pin Name	Analog	EBI	Timers	Communication	Other
L9	PB14	HFXTAL_N			US0_CS #4/5 LEU0_RX #1	
L10	AVDD_0	Analog power supply 0.				
L11	PD0	ADC0_CH0 DAC0_OUT0ALT #4/ OPAMP_OUT0ALT OPAMP_OUT2 #1		PCNT2_S0IN #0	US1_TX #1	

5.21.2 Alternate Functionality Pinout

A wide selection of alternate functionality is available for multiplexing to various pins. This is shown in the following table. The table shows the name of the alternate functionality in the first column, followed by columns showing the possible LOCATION bitfield settings.

Note: Some functionality, such as analog interfaces, do not have alternate settings or a LOCATION bitfield. In these cases, the pinout is shown in the column corresponding to LOCATION 0.

Table 5.62. Alternate Functionality Overview

Alternate	LOCATION							
Functionality	0	1	2	3	4	5	6	Description
ACMP0_CH0	PC0							Analog comparator ACMP0, channel 0.
ACMP0_CH1	PC1							Analog comparator ACMP0, channel 1.
ACMP0_CH2	PC2							Analog comparator ACMP0, channel 2.
ACMP0_CH3	PC3							Analog comparator ACMP0, channel 3.
ACMP0_CH4	PC4							Analog comparator ACMP0, channel 4.
ACMP0_CH5	PC5							Analog comparator ACMP0, channel 5.
ACMP0_CH6	PC6							Analog comparator ACMP0, channel 6.
ACMP0_CH7	PC7							Analog comparator ACMP0, channel 7.
ACMP0_O	PE13	PE2	PD6					Analog comparator ACMP0, digital output.
ACMP1_CH0	PC8							Analog comparator ACMP1, channel 0.
ACMP1_CH1	PC9							Analog comparator ACMP1, channel 1.
ACMP1_CH2	PC10							Analog comparator ACMP1, channel 2.
ACMP1_CH3	PC11							Analog comparator ACMP1, channel 3.
ACMP1_O	PF2	PE3	PD7					Analog comparator ACMP1, digital output.
ADC0_CH0	PD0							Analog to digital converter ADC0, input channel number 0.
ADC0_CH1	PD1							Analog to digital converter ADC0, input channel number 1.
ADC0_CH2	PD2							Analog to digital converter ADC0, input channel number 2.
ADC0_CH3	PD3							Analog to digital converter ADC0, input channel number 3.
ADC0_CH4	PD4							Analog to digital converter ADC0, input channel number 4.
ADC0_CH5	PD5							Analog to digital converter ADC0, input channel number 5.
ADC0_CH6	PD6							Analog to digital converter ADC0, input channel number 6.
ADC0_CH7	PD7							Analog to digital converter ADC0, input channel number 7.
BOOT_RX	PE11							Bootloader RX.
BOOT_TX	PE10							Bootloader TX.

Alternate	LOCATION							
Functionality	0	1	2	3	4	5	6	Description
BU_STAT	PE3							Backup Power Domain status, whether or not the system is in backup mode
BU_VIN	PD8							Battery input for Backup Power Domain
BU_VOUT	PE2							Power output for Backup Power Domain
CMU_CLK0	PA2		PD7					Clock Management Unit, clock output number 0.
CMU_CLK1	PA1	PD8	PE12					Clock Management Unit, clock output number 1.
DAC0_OUT0 / OPAMP_OUT0	PB11							Digital to Analog Converter DAC0_OUT0 /OPAMP output channel number 0.
DAC0_OUT0ALT / OPAMP_OUT0ALT	PC0	PC1	PC2	PC3	PD0			Digital to Analog Converter DAC0_OUT0ALT / OPAMP alternative output for channel 0.
DAC0_OUT1 / OPAMP_OUT1	PB12							Digital to Analog Converter DAC0_OUT1 /OPAMP output channel number 1.
DAC0_OUT1ALT / OPAMP_OUT1ALT					PD1			Digital to Analog Converter DAC0_OUT1ALT / OPAMP alternative output for channel 1.
DBG_SWCLK	PF0	PF0	PF0	PF0				Debug-interface Serial Wire clock input. Note that this function is enabled to pin out of reset, and has a built-in pull down.
DBG_SWDIO	PF1	PF1	PF1	PF1				Debug-interface Serial Wire data input / output. Note that this function is enabled to pin out of reset, and has a built-in pull up.
DBG_SWO	PF2		PD1	PD2				Debug-interface Serial Wire viewer Output. Note that this function is not enabled after reset, and must be enabled by software to be used.
EBI_A00	PA12	PA12	PA12					External Bus Interface (EBI) address output pin 00.
EBI_A01	PA13	PA13	PA13					External Bus Interface (EBI) address output pin 01.
EBI_A02	PA14	PA14	PA14					External Bus Interface (EBI) address output pin 02.
EBI_A03	PB9	PB9	PB9					External Bus Interface (EBI) address output pin 03.
EBI_A04	PB10	PB10	PB10					External Bus Interface (EBI) address output pin 04.
EBI_A05	PC6	PC6	PC6					External Bus Interface (EBI) address output pin 05.
EBI_A06	PC7	PC7	PC7					External Bus Interface (EBI) address output pin 06.
EBI_A07	PE0	PE0	PE0					External Bus Interface (EBI) address output pin 07.
EBI_A08	PE1	PE1	PE1					External Bus Interface (EBI) address output pin 08.
EBI_A09	PE2	PC9	PC9					External Bus Interface (EBI) address output pin 09.
EBI_A10	PE3	PC10	PC10					External Bus Interface (EBI) address output pin 10.
EBI_A11	PE4	PE4	PE4					External Bus Interface (EBI) address output pin 11.
EBI_A12	PE5	PE5	PE5					External Bus Interface (EBI) address output pin 12.
EBI_A13	PE6	PE6	PE6					External Bus Interface (EBI) address output pin 13.
EBI_A14	PE7	PE7	PE7					External Bus Interface (EBI) address output pin 14.

Alternate	LOCATION							
Functionality	0	1	2	3	4	5	6	Description
EBI_A15	PC8	PC8	PC8					External Bus Interface (EBI) address output pin 15.
EBI_A16	PB0	PB0	PB0					External Bus Interface (EBI) address output pin 16.
EBI_A17	PB1	PB1	PB1					External Bus Interface (EBI) address output pin 17.
EBI_A18	PB2	PB2	PB2					External Bus Interface (EBI) address output pin 18.
EBI_A19	PB3	PB3	PB3					External Bus Interface (EBI) address output pin 19.
EBI_A20	PB4	PB4	PB4					External Bus Interface (EBI) address output pin 20.
EBI_A21	PB5	PB5	PB5					External Bus Interface (EBI) address output pin 21.
EBI_A22	PB6	PB6	PB6					External Bus Interface (EBI) address output pin 22.
EBI_A23	PC0	PC0	PC0					External Bus Interface (EBI) address output pin 23.
EBI_A24	PC1	PC1	PC1					External Bus Interface (EBI) address output pin 24.
EBI_A25	PC2	PC2	PC2					External Bus Interface (EBI) address output pin 25.
EBI_A26	PC4	PC4	PC4					External Bus Interface (EBI) address output pin 26.
EBI_A27	PD2	PD2	PD2					External Bus Interface (EBI) address output pin 27.
EBI_AD00	PE8	PE8	PE8					External Bus Interface (EBI) address and data input / output pin 00.
EBI_AD01	PE9	PE9	PE9					External Bus Interface (EBI) address and data input / output pin 01.
EBI_AD02	PE10	PE10	PE10					External Bus Interface (EBI) address and data input / output pin 02.
EBI_AD03	PE11	PE11	PE11					External Bus Interface (EBI) address and data input / output pin 03.
EBI_AD04	PE12	PE12	PE12					External Bus Interface (EBI) address and data input / output pin 04.
EBI_AD05	PE13	PE13	PE13					External Bus Interface (EBI) address and data input / output pin 05.
EBI_AD06	PE14	PE14	PE14					External Bus Interface (EBI) address and data input / output pin 06.
EBI_AD07	PE15	PE15	PE15					External Bus Interface (EBI) address and data input / output pin 07.
EBI_AD08	PA15	PA15	PA15					External Bus Interface (EBI) address and data input / output pin 08.
EBI_AD09	PA0	PA0	PA0					External Bus Interface (EBI) address and data input / output pin 09.
EBI_AD10	PA1	PA1	PA1					External Bus Interface (EBI) address and data input / output pin 10.
EBI_AD11	PA2	PA2	PA2					External Bus Interface (EBI) address and data input / output pin 11.
EBI_AD12	PA3	PA3	PA3					External Bus Interface (EBI) address and data input / output pin 12.
EBI_AD13	PA4	PA4	PA4					External Bus Interface (EBI) address and data input / output pin 13.

Alternate	LOCATION							
Functionality	0	1	2	3	4	5	6	Description
EBI_AD14	PA5	PA5	PA5					External Bus Interface (EBI) address and data input / output pin 14.
EBI_AD15	PA6	PA6	PA6					External Bus Interface (EBI) address and data input / output pin 15.
EBI_ALE		PC11	PC11					External Bus Interface (EBI) Address Latch Enable output.
EBI_ARDY	PF2	PF2	PF2					External Bus Interface (EBI) Hardware Ready Control input.
EBI_BL0	PF6	PF6	PF6					External Bus Interface (EBI) Byte Lane/Enable pin 0.
EBI_BL1	PF7	PF7	PF7					External Bus Interface (EBI) Byte Lane/Enable pin 1.
EBI_CS0	PD9	PD9	PD9					External Bus Interface (EBI) Chip Select output 0.
EBI_CS1	PD10	PD10	PD10					External Bus Interface (EBI) Chip Select output 1.
EBI_CS2	PD11	PD11	PD11					External Bus Interface (EBI) Chip Select output 2.
EBI_CS3	PD12	PD12	PD12					External Bus Interface (EBI) Chip Select output 3.
EBI_CSTFT	PA7	PA7	PA7					External Bus Interface (EBI) Chip Select output TFT.
EBI_DCLK	PA8	PA8	PA8					External Bus Interface (EBI) TFT Dot Clock pin.
EBI_DTEN	PA9	PA9	PA9					External Bus Interface (EBI) TFT Data Enable pin.
EBI_HSNC	PA11	PA11	PA11					External Bus Interface (EBI) TFT Horizontal Synchronization pin.
EBI_NANDREn	PC3	PC3	PC3					External Bus Interface (EBI) NAND Read Enable output.
EBI_NANDWEn	PC5	PC5	PC5					External Bus Interface (EBI) NAND Write Enable output.
EBI_REn	PF5	PF9	PF5					External Bus Interface (EBI) Read Enable output.
EBI_VSNC	PA10	PA10	PA10					External Bus Interface (EBI) TFT Vertical Synchronization pin.
EBI_WEn		PF8						External Bus Interface (EBI) Write Enable output.
ETM_TCLK	PD7	PF8	PC6	PA6				Embedded Trace Module ETM clock .
ETM_TD0	PD6	PF9	PC7	PA2				Embedded Trace Module ETM data 0.
ETM_TD1	PD3	PD13	PD3	PA3				Embedded Trace Module ETM data 1.
ETM_TD2	PD4	PB15	PD4	PA4				Embedded Trace Module ETM data 2.
ETM_TD3	PD5		PD5	PA5				Embedded Trace Module ETM data 3.
GPIO_EM4WU0	PA0							Pin can be used to wake the system up from EM4
GPIO_EM4WU1	PA6							Pin can be used to wake the system up from EM4
GPIO_EM4WU2	PC9							Pin can be used to wake the system up from EM4
GPIO_EM4WU3	PF1							Pin can be used to wake the system up from EM4
GPIO_EM4WU4	PF2							Pin can be used to wake the system up from EM4
GPIO_EM4WU5	PE13							Pin can be used to wake the system up from EM4

Alternate	LOCATION							
Functionality	0	1	2	3	4	5	6	Description
HFXTAL_N	PB14							High Frequency Crystal negative pin. Also used as external optional clock input pin.
HFXTAL_P	PB13							High Frequency Crystal positive pin.
I2C0_SCL	PA1	PD7	PC7	PD15	PC1	PF1	PE13	I2C0 Serial Clock Line input / output.
I2C0_SDA	PA0	PD6	PC6	PD14	PC0	PF0	PE12	I2C0 Serial Data input / output.
I2C1_SCL	PC5	PB12	PE1					I2C1 Serial Clock Line input / output.
I2C1_SDA	PC4	PB11	PE0					I2C1 Serial Data input / output.
LCD_BCAP_N	PA13							LCD voltage booster (optional), boost capacitor, negative pin. If using the LCD voltage booster, connect a 22 nF capacitor between LCD_BCAP_N and LCD_BCAP_P.
LCD_BCAP_P	PA12							LCD voltage booster (optional), boost capacitor, positive pin. If using the LCD voltage booster, connect a 22 nF capacitor between LCD_BCAP_N and LCD_BCAP_P.
LCD_BEXT	PA14							LCD voltage booster (optional), boost output. If using the LCD voltage booster, connect a 1 uF capacitor between this pin and VSS. An external LCD voltage may also be applied to this pin if the booster is not enabled. If AVDD is used directly as the LCD supply voltage, this pin may be left unconnected or used as a GPIO.
LCD_COM0	PE4							LCD driver common line number 0.
LCD_COM1	PE5							LCD driver common line number 1.
LCD_COM2	PE6							LCD driver common line number 2.
LCD_COM3	PE7							LCD driver common line number 3.
LCD_SEG0	PF2							LCD segment line 0. Segments 0, 1, 2 and 3 are controlled by SEGEN0.
LCD_SEG3	PF5							LCD segment line 3. Segments 0, 1, 2 and 3 are controlled by SEGEN0.
LCD_SEG4	PE8							LCD segment line 4. Segments 4, 5, 6 and 7 are controlled by SEGEN1.
LCD_SEG5	PE9							LCD segment line 5. Segments 4, 5, 6 and 7 are controlled by SEGEN1.
LCD_SEG6	PE10							LCD segment line 6. Segments 4, 5, 6 and 7 are controlled by SEGEN1.
LCD_SEG7	PE11							LCD segment line 7. Segments 4, 5, 6 and 7 are controlled by SEGEN1.
LCD_SEG8	PE12							LCD segment line 8. Segments 8, 9, 10 and 11 are controlled by SEGEN2.
LCD_SEG9	PE13							LCD segment line 9. Segments 8, 9, 10 and 11 are controlled by SEGEN2.
LCD_SEG10	PE14							LCD segment line 10. Segments 8, 9, 10 and 11 are controlled by SEGEN2.

Alternate	LOCATION							
Functionality	0	1	2	3	4	5	6	Description
LCD_SEG11	PE15							LCD segment line 11. Segments 8, 9, 10 and 11 are controlled by SEGEN2.
LCD_SEG12	PA15							LCD segment line 12. Segments 12, 13, 14 and 15 are controlled by SEGEN3.
LCD_SEG13	PA0							LCD segment line 13. Segments 12, 13, 14 and 15 are controlled by SEGEN3.
LCD_SEG14	PA1							LCD segment line 14. Segments 12, 13, 14 and 15 are controlled by SEGEN3.
LCD_SEG15	PA2							LCD segment line 15. Segments 12, 13, 14 and 15 are controlled by SEGEN3.
LCD_SEG16	PA3							LCD segment line 16. Segments 16, 17, 18 and 19 are controlled by SEGEN4.
LCD_SEG17	PA4							LCD segment line 17. Segments 16, 17, 18 and 19 are controlled by SEGEN4.
LCD_SEG18	PA5							LCD segment line 18. Segments 16, 17, 18 and 19 are controlled by SEGEN4.
LCD_SEG19	PA6							LCD segment line 19. Segments 16, 17, 18 and 19 are controlled by SEGEN4.
LCD_SEG20/ LCD_COM4	PB3							LCD segment line 20. Segments 20, 21, 22 and 23 are controlled by SEGEN5. This pin may also be used as LCD COM line 4
LCD_SEG21/ LCD_COM5	PB4							LCD segment line 21. Segments 20, 21, 22 and 23 are controlled by SEGEN5. This pin may also be used as LCD COM line 5
LCD_SEG22/ LCD_COM6	PB5							LCD segment line 22. Segments 20, 21, 22 and 23 are controlled by SEGEN5. This pin may also be used as LCD COM line 6
LCD_SEG23/ LCD_COM7	PB6							LCD segment line 23. Segments 20, 21, 22 and 23 are controlled by SEGEN5. This pin may also be used as LCD COM line 7
LCD_SEG24	PF6							LCD segment line 24. Segments 24, 25, 26 and 27 are controlled by SEGEN6.
LCD_SEG25	PF7							LCD segment line 25. Segments 24, 25, 26 and 27 are controlled by SEGEN6.
LCD_SEG26	PF8							LCD segment line 26. Segments 24, 25, 26 and 27 are controlled by SEGEN6.
LCD_SEG27	PF9							LCD segment line 27. Segments 24, 25, 26 and 27 are controlled by SEGEN6.
LCD_SEG28	PD9							LCD segment line 28. Segments 28, 29, 30 and 31 are controlled by SEGEN7.
LCD_SEG29	PD10							LCD segment line 29. Segments 28, 29, 30 and 31 are controlled by SEGEN7.
LCD_SEG30	PD11							LCD segment line 30. Segments 28, 29, 30 and 31 are controlled by SEGEN7.
LCD_SEG31	PD12							LCD segment line 31. Segments 28, 29, 30 and 31 are controlled by SEGEN7.

Alternate	LOCATION							
Functionality	0	1	2	3	4	5	6	Description
LCD_SEG32	PB0							LCD segment line 32. Segments 32, 33, 34 and 35 are controlled by SEGEN8.
LCD_SEG33	PB1							LCD segment line 33. Segments 32, 33, 34 and 35 are controlled by SEGEN8.
LCD_SEG34	PB2							LCD segment line 34. Segments 32, 33, 34 and 35 are controlled by SEGEN8.
LCD_SEG35	PA7							LCD segment line 35. Segments 32, 33, 34 and 35 are controlled by SEGEN8.
LCD_SEG36	PA8							LCD segment line 36. Segments 36, 37, 38 and 39 are controlled by SEGEN9.
LCD_SEG37	PA9							LCD segment line 37. Segments 36, 37, 38 and 39 are controlled by SEGEN9.
LCD_SEG38	PA10							LCD segment line 38. Segments 36, 37, 38 and 39 are controlled by SEGEN9.
LCD_SEG39	PA11							LCD segment line 39. Segments 36, 37, 38 and 39 are controlled by SEGEN9.
LES_ALTEX0	PD6							LESENSE alternate exite output 0.
LES_ALTEX1	PD7							LESENSE alternate exite output 1.
LES_ALTEX2	PA3							LESENSE alternate exite output 2.
LES_ALTEX3	PA4							LESENSE alternate exite output 3.
LES_ALTEX4	PA5							LESENSE alternate exite output 4.
LES_ALTEX5	PE11							LESENSE alternate exite output 5.
LES_ALTEX6	PE12							LESENSE alternate exite output 6.
LES_ALTEX7	PE13							LESENSE alternate exite output 7.
LES_CH0	PC0							LESENSE channel 0.
LES_CH1	PC1							LESENSE channel 1.
LES_CH2	PC2							LESENSE channel 2.
LES_CH3	PC3							LESENSE channel 3.
LES_CH4	PC4							LESENSE channel 4.
LES_CH5	PC5							LESENSE channel 5.
LES_CH6	PC6							LESENSE channel 6.
LES_CH7	PC7							LESENSE channel 7.
LES_CH8	PC8							LESENSE channel 8.
LES_CH9	PC9							LESENSE channel 9.
LES_CH10	PC10							LESENSE channel 10.
LES_CH11	PC11							LESENSE channel 11.
LETIM0_OUT0	PD6	PB11	PF0	PC4				Low Energy Timer LETIM0, output channel 0.
LETIM0_OUT1	PD7	PB12	PF1	PC5				Low Energy Timer LETIM0, output channel 1.
LEU0_RX	PD5	PB14	PE15	PF1	PA0			LEUART0 Receive input.

Alternate	LOCATION							
Functionality	0	1	2	3	4	5	6	Description
LEU0_TX	PD4	PB13	PE14	PF0	PF2			LEUART0 Transmit output. Also used as receive input in half duplex communication.
LEU1_RX	PC7	PA6						LEUART1 Receive input.
LEU1_TX	PC6	PA5						LEUART1 Transmit output. Also used as receive input in half duplex communication.
LFXTAL_N	PB8							Low Frequency Crystal (typically 32.768 kHz) negative pin. Also used as an optional external clock input pin.
LFXTAL_P	PB7							Low Frequency Crystal (typically 32.768 kHz) positive pin.
OPAMP_N0 / DAC0_N0	PC5							Operational Amplifier 0 external negative input.
OPAMP_N1 / DAC0_N1	PD7							Operational Amplifier 1 external negative input.
OPAMP_N2	PD3							Operational Amplifier 2 external negative input.
OPAMP_OUT2	PD5	PD0						Operational Amplifier 2 output.
OPAMP_P0 / DAC0_P0	PC4							Operational Amplifier 0 external positive input.
OPAMP_P1 / DAC0_P1	PD6							Operational Amplifier 1 external positive input.
OPAMP_P2	PD4							Operational Amplifier 2 external positive input.
PCNT0_S0IN		PE0	PC0	PD6				Pulse Counter PCNT0 input number 0.
PCNT0_S1IN		PE1	PC1	PD7				Pulse Counter PCNT0 input number 1.
PCNT1_S0IN	PC4	PB3						Pulse Counter PCNT1 input number 0.
PCNT1_S1IN	PC5	PB4						Pulse Counter PCNT1 input number 1.
PCNT2_S0IN	PD0	PE8						Pulse Counter PCNT2 input number 0.
PCNT2_S1IN	PD1	PE9						Pulse Counter PCNT2 input number 1.
PRS_CH0	PA0							Peripheral Reflex System PRS, channel 0.
PRS_CH1	PA1							Peripheral Reflex System PRS, channel 1.
PRS_CH2	PC0	PF5						Peripheral Reflex System PRS, channel 2.
PRS_CH3	PC1	PE8						Peripheral Reflex System PRS, channel 3.
TIM0_CC0	PA0	PA0	PF6	PD1	PA0	PF0		Timer 0 Capture Compare input / output channel 0.
TIM0_CC1	PA1	PA1	PF7	PD2	PC0	PF1		Timer 0 Capture Compare input / output channel 1.
TIM0_CC2	PA2	PA2	PF8	PD3	PC1	PF2		Timer 0 Capture Compare input / output channel 2.
TIM0_CDTI0	PA3				PC2			Timer 0 Complimentary Dead Time Insertion channel 0.
TIM0_CDTI1	PA4				PC3			Timer 0 Complimentary Dead Time Insertion channel 1.
TIM0_CDTI2	PA5		PF5		PC4	PF5		Timer 0 Complimentary Dead Time Insertion channel 2.
TIM1_CC0		PE10	PB0	PB7	PD6			Timer 1 Capture Compare input / output channel 0.

Alternate	LOCATION							
Functionality	0	1	2	3	4	5	6	Description
TIM1_CC1		PE11	PB1	PB8	PD7			Timer 1 Capture Compare input / output channel 1.
TIM1_CC2		PE12	PB2	PB11				Timer 1 Capture Compare input / output channel 2.
TIM2_CC0	PA8	PA12	PC8					Timer 2 Capture Compare input / output channel 0.
TIM2_CC1	PA9	PA13	PC9					Timer 2 Capture Compare input / output channel 1.
TIM2_CC2	PA10	PA14	PC10					Timer 2 Capture Compare input / output channel 2.
TIM3_CC0	PE14	PE0						Timer 3 Capture Compare input / output channel 0.
TIM3_CC1	PE15	PE1						Timer 3 Capture Compare input / output channel 1.
TIM3_CC2	PA15	PE2						Timer 3 Capture Compare input / output channel 2.
U0_RX	PF7	PE1	PA4					UART0 Receive input.
U0_TX	PF6	PE0	PA3					UART0 Transmit output. Also used as receive input in half duplex communication.
U1_RX		PF11	PB10	PE3				UART1 Receive input.
U1_TX		PF10	PB9	PE2				UART1 Transmit output. Also used as receive input in half duplex communication.
US0_CLK	PE12	PE5	PC9		PB13	PB13		USART0 clock input / output.
US0_CS	PE13	PE4	PC8		PB14	PB14		USART0 chip select input / output.
US0_RX	PE11	PE6	PC10	PE12	PB8	PC1		USART0 Asynchronous Receive. USART0 Synchronous mode Main Input / Secondary Output (MISO).
US0_TX	PE10	PE7	PC11	PE13	PB7	PC0		USART0 Asynchronous Transmit.Also used as receive input in half duplex communication. USART0 Synchronous mode Main Output / Secondary Input (MOSI).
US1_CLK	PB7	PD2	PF0					USART1 clock input / output.
US1_CS	PB8	PD3	PF1					USART1 chip select input / output.
US1_RX	PC1	PD1	PD6					USART1 Asynchronous Receive. USART1 Synchronous mode Main Input / Secondary Output (MISO).
US1_TX	PC0	PD0	PD7					USART1 Asynchronous Transmit.Also used as receive input in half duplex communication. USART1 Synchronous mode Main Output / Secondary Input (MOSI).
US2_CLK	PC4	PB5						USART2 clock input / output.
US2_CS	PC5	PB6						USART2 chip select input / output.
US2_RX	PC3	PB4						USART2 Asynchronous Receive. USART2 Synchronous mode Main Input / Secondary Output (MISO).

Alternate	LOCATION							
Functionality	0	1	2	3	4	5	6	Description
US2_TX	PC2	PB3						USART2 Asynchronous Transmit.Also used as receive input in half duplex communication. USART2 Synchronous mode Main Output / Secondary Input (MOSI).
USB_DM	PF10							USB D- pin.
USB_DMPU	PD2							USB D- Pullup control.
USB_DP	PF11							USB D+ pin.
USB_ID	PF12							USB ID pin. Used in OTG mode.
USB_VBUS	USB_VBUS							USB 5 V VBUS input.
USB_VBUSEN	PF5							USB 5 V VBUS enable.
USB_VREGI	USB_VREGI							USB Input to internal 3.3 V regulator
USB_VREGO	USB_VREGO							USB Decoupling for internal 3.3 V USB regulator and regulator output

5.21.3 GPIO Pinout Overview

The specific GPIO pins available in EFM32WG990 are shown in the following table. Each GPIO port is organized as 16-bit ports indicated by letters A through F, and the individual pin on this port is indicated by a number from 15 down to 0.

Table 5.63. GPIO Pinout

Port	Pin 15	Pin 14	Pin 13	Pin 12	Pin 11	Pin 10	Pin 9	Pin 8	Pin 7	Pin 6	Pin 5	Pin 4	Pin 3	Pin 2	Pin 1	Pin 0
Port A	PA15	PA14	PA13	PA12	PA11	PA10	PA9	PA8	PA7	PA6	PA5	PA4	PA3	PA2	PA1	PA0
Port B	PB15	PB14	PB13	PB12	PB11	PB10	PB9	PB8	PB7	PB6	PB5	PB4	PB3	PB2	PB1	PB0
Port C	—	—	—	—	PC11	PC10	PC9	PC8	PC7	PC6	PC5	PC4	PC3	PC2	PC1	PC0
Port D	PD15	PD14	PD13	PD12	PD11	PD10	PD9	PD8	PD7	PD6	PD5	PD4	PD3	PD2	PD1	PD0
Port E	PE15	PE14	PE13	PE12	PE11	PE10	PE9	PE8	PE7	PE6	PE5	PE4	PE3	PE2	PE1	PE0
Port F	—	—	—	PF12	PF11	PF10	PF9	PF8	PF7	PF6	PF5	—	—	PF2	PF1	PF0

5.21.4 Opamp Pinout Overview

The specific opamp terminals available in EFM32WG990 is shown in the following figure.

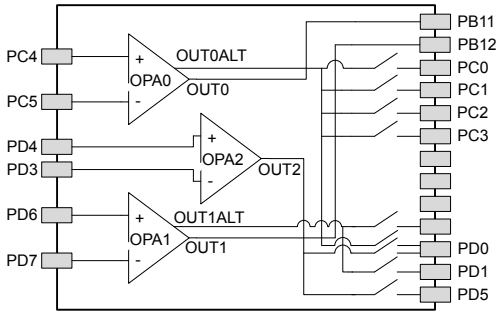

Figure 5.42. Opamp Pinout

5.22 EFM32WG995 (BGA120)

5.22.1 Pinout

The EFM32WG995 pinout is shown in the following figure and table. Alternate locations are denoted by "#" followed by the location number (Multiple locations on the same pin are split with "/"). Alternate locations can be configured in the LOCATION bitfield in the *_ROUTE register in the module in question.

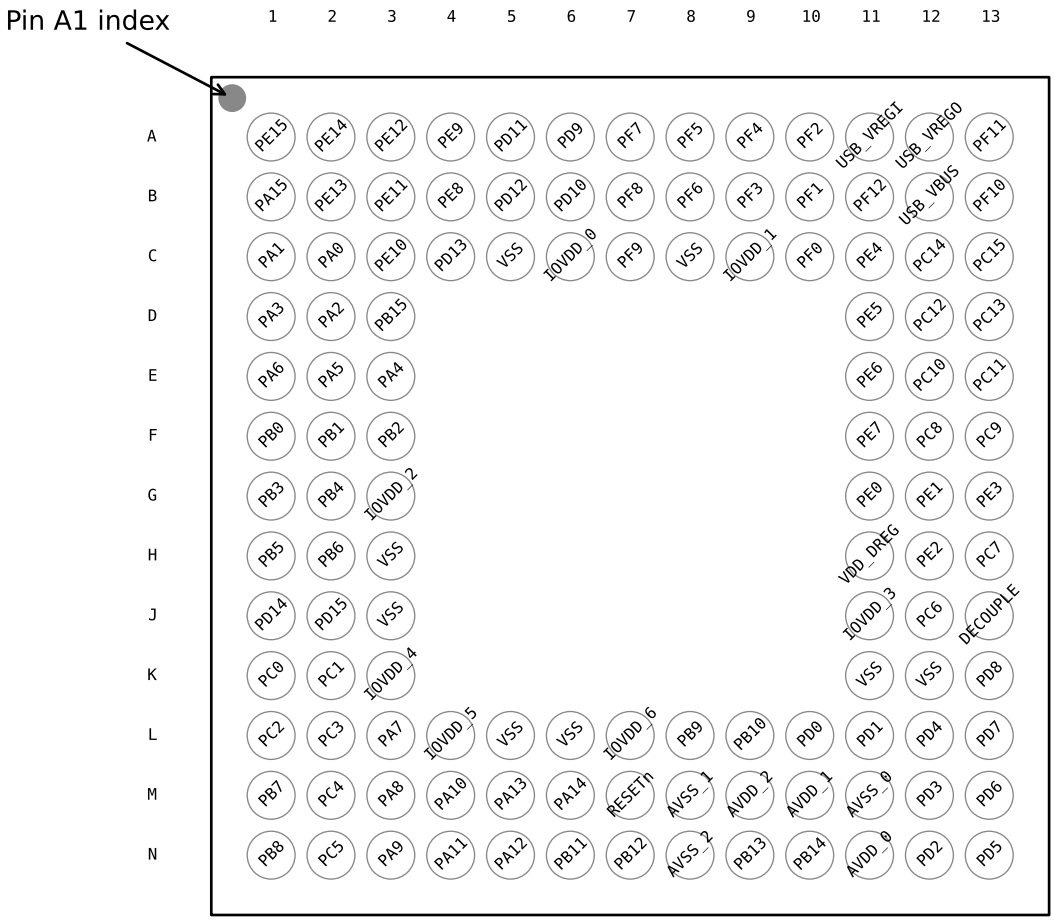

Figure 5.43. EFM32WG995 Pinout (top view, not to scale)

Table 5.64. Device Pinout

BGA120 Pin# and Name		Pin Alternate Functionality / Description				
Pin #	**Pin Name**	**Analog**	**EBI**	**Timers**	**Communication**	**Other**
A1	PE15	LCD_SEG11	EBI_AD07 #0/1/2	TIM3_CC1 #0	LEU0_RX #2	
A2	PE14	LCD_SEG10	EBI_AD06 #0/1/2	TIM3_CC0 #0	LEU0_TX #2	
A3	PE12	LCD_SEG8	EBI_AD04 #0/1/2	TIM1_CC2 #1	US0_RX #3 US0_CLK #0 I2C0_SDA #6	CMU_CLK1 #2 LES_ALTEX6 #0

BGA120 Pin# and Name		Pin Alternate Functionality / Description				
Pin #	Pin Name	Analog	EBI	Timers	Communication	Other
A4	PE9	LCD_SEG5	EBI_AD01 #0/1/2	PCNT2_S1IN #1		
A5	PD11	LCD_SEG30	EBI_CS2 #0/1/2			
A6	PD9	LCD_SEG28	EBI_CS0 #0/1/2			
A7	PF7	LCD_SEG25	EBI_BL1 #0/1/2	TIM0_CC1 #2	U0_RX #0	
A8	PF5	LCD_SEG3	EBI_REn #0/2	TIM0_CDTI2 #2/5	USB_VBUSEN #0	PRS_CH2 #1
A9	PF4	LCD_SEG2	EBI_WEn #0/2	TIM0_CDTI1 #2/5		PRS_CH1 #1
A10	PF2	LCD_SEG0	EBI_ARDY #0/1/2	TIM0_CC2 #5	LEU0_TX #4	ACMP1_O #0 DBG_SWO #0 GPIO_EM4WU4
A11	USB_VREGI	Input to internal 3.3 V USB regulator				
A12	USB_VREGO	Output and decoupling for internal 3.3 V USB regulator				
A13	PF11				U1_RX #1 USB_DP	
B1	PA15	LCD_SEG12	EBI_AD08 #0/1/2	TIM3_CC2 #0		
B2	PE13	LCD_SEG9	EBI_AD05 #0/1/2		US0_TX #3 US0_CS #0 I2C0_SCL #6	LES_ALTEX7 #0 ACMP0_O #0 GPIO_EM4WU5
B3	PE11	LCD_SEG7	EBI_AD03 #0/1/2	TIM1_CC1 #1	US0_RX #0	LES_ALTEX5 #0 BOOT_RX
B4	PE8	LCD_SEG4	EBI_AD00 #0/1/2	PCNT2_S0IN #1		PRS_CH3 #1
B5	PD12	LCD_SEG31	EBI_CS3 #0/1/2			
B6	PD10	LCD_SEG29	EBI_CS1 #0/1/2			
B7	PF8	LCD_SEG26	EBI_WEn #1	TIM0_CC2 #2		ETM_TCLK #1
B8	PF6	LCD_SEG24	EBI_BL0 #0/1/2	TIM0_CC0 #2	U0_TX #0	
B9	PF3	LCD_SEG1	EBI_ALE #0	TIM0_CDTI0 #2/5		PRS_CH0 #1 ETM_TD3 #1
B10	PF1			TIM0_CC1 #5 LE-TIM0_OUT1 #2	US1_CS #2 LEU0_RX #3 I2C0_SCL #5	DBG_SWDIO #0/1/2/3 GPIO_EM4WU3
B11	PF12				USB_ID	
B12	USB_VBUS	USB 5.0 V VBUS input.				
B13	PF10				U1_TX #1 USB_DM	
C1	PA1	LCD_SEG14	EBI_AD10 #0/1/2	TIM0_CC1 #0/1	I2C0_SCL #0	CMU_CLK1 #0 PRS_CH1 #0
C2	PA0	LCD_SEG13	EBI_AD09 #0/1/2	TIM0_CC0 #0/1/4	LEU0_RX #4 I2C0_SDA #0	PRS_CH0 #0 GPIO_EM4WU0
C3	PE10	LCD_SEG6	EBI_AD02 #0/1/2	TIM1_CC0 #1	US0_TX #0	BOOT_TX
C4	PD13					ETM_TD1 #1
C5	VSS	Ground.				
C6	IOVDD_0	Digital IO power supply 0.				
C7	PF9	LCD_SEG27	EBI_REn #1			ETM_TD0 #1

BGA120 Pin# and Name		Pin Alternate Functionality / Description				
Pin #	Pin Name	Analog	EBI	Timers	Communication	Other
C8	VSS	Ground.				
C9	IOVDD_1	Digital IO power supply 1.				
C10	PF0			TIM0_CC0 #5 LE-TIM0_OUT0 #2	US1_CLK #2 LEU0_TX #3 I2C0_SDA #5	DBG_SWCLK #0/1/2/3
C11	PE4	LCD_COM0	EBI_A11 #0/1/2		US0_CS #1	
C12	PC14	ACMP1_CH6 DAC0_OUT1ALT #2/ OPAMP_OUT1ALT		TIM0_CDTI1 #1/3 TIM1_CC1 #0 PCNT0_S1IN #0	US0_CS #3 U0_TX #3	LES_CH14 #0
C13	PC15	ACMP1_CH7 DAC0_OUT1ALT #3/ OPAMP_OUT1ALT		TIM0_CDTI2 #1/3 TIM1_CC2 #0	US0_CLK #3 U0_RX #3	LES_CH15 #0 DBG_SWO #1
D1	PA3	LCD_SEG16	EBI_AD12 #0/1/2	TIM0_CDTI0 #0	U0_TX #2	LES_ALTEX2 #0 ETM_TD1 #3
D2	PA2	LCD_SEG15	EBI_AD11 #0/1/2	TIM0_CC2 #0/1		CMU_CLK0 #0 ETM_TD0 #3
D3	PB15					ETM_TD2 #1
D11	PE5	LCD_COM1	EBI_A12 #0/1/2		US0_CLK #1	
D12	PC12	ACMP1_CH4 DAC0_OUT1ALT #0/ OPAMP_OUT1ALT			U1_TX #0	CMU_CLK0 #1 LES_CH12 #0
D13	PC13	ACMP1_CH5 DAC0_OUT1ALT #1/ OPAMP_OUT1ALT		TIM0_CDTI0 #1/3 TIM1_CC0 #0 TIM1_CC2 #4 PCNT0_S0IN #0	U1_RX #0	LES_CH13 #0
E1	PA6	LCD_SEG19	EBI_AD15 #0/1/2		LEU1_RX #1	ETM_TCLK #3 GPIO_EM4WU1
E2	PA5	LCD_SEG18	EBI_AD14 #0/1/2	TIM0_CDTI2 #0	LEU1_TX #1	LES_ALTEX4 #0 ETM_TD3 #3
E3	PA4	LCD_SEG17	EBI_AD13 #0/1/2	TIM0_CDTI1 #0	U0_RX #2	LES_ALTEX3 #0 ETM_TD2 #3
E11	PE6	LCD_COM2	EBI_A13 #0/1/2		US0_RX #1	
E12	PC10	ACMP1_CH2	EBI_A10 #1/2	TIM2_CC2 #2	US0_RX #2	LES_CH10 #0
E13	PC11	ACMP1_CH3	EBI_ALE #1/2		US0_TX #2	LES_CH11 #0
F1	PB0	LCD_SEG32	EBI_A16 #0/1/2	TIM1_CC0 #2		
F2	PB1	LCD_SEG33	EBI_A17 #0/1/2	TIM1_CC1 #2		
F3	PB2	LCD_SEG34	EBI_A18 #0/1/2	TIM1_CC2 #2		
F11	PE7	LCD_COM3	EBI_A14 #0/1/2		US0_TX #1	
F12	PC8	ACMP1_CH0	EBI_A15 #0/1/2	TIM2_CC0 #2	US0_CS #2	LES_CH8 #0
F13	PC9	ACMP1_CH1	EBI_A09 #1/2	TIM2_CC1 #2	US0_CLK #2	LES_CH9 #0 GPIO_EM4WU2

BGA120 Pin# and Name		Pin Alternate Functionality / Description				
Pin #	Pin Name	Analog	EBI	Timers	Communication	Other
G1	PB3	LCD_SEG20/ LCD_COM4	EBI_A19 #0/1/2	PCNT1_S0IN #1	US2_TX #1	
G2	PB4	LCD_SEG21/ LCD_COM5	EBI_A20 #0/1/2	PCNT1_S1IN #1	US2_RX #1	
G3	IOVDD_2	Digital IO power supply 2.				
G11	PE0		EBI_A07 #0/1/2	TIM3_CC0 #1 PCNT0_S0IN #1	U0_TX #1 I2C1_SDA #2	
G12	PE1		EBI_A08 #0/1/2	TIM3_CC1 #1 PCNT0_S1IN #1	U0_RX #1 I2C1_SCL #2	
G13	PE3	BU_STAT	EBI_A10 #0		U1_RX #3	ACMP1_O #1
H1	PB5	LCD_SEG22/ LCD_COM6	EBI_A21 #0/1/2		US2_CLK #1	
H2	PB6	LCD_SEG23/ LCD_COM7	EBI_A22 #0/1/2		US2_CS #1	
H3	VSS	Ground.				
H11	VDD_DREG	Power supply for on-chip voltage regulator.				
H12	PE2	BU_VOUT	EBI_A09 #0	TIM3_CC2 #1	U1_TX #3	ACMP0_O #1
H13	PC7	ACMP0_CH7	EBI_A06 #0/1/2		LEU1_RX #0 I2C0_SCL #2	LES_CH7 #0 ETM_TD0 #2
J1	PD14				I2C0_SDA #3	
J2	PD15				I2C0_SCL #3	
J3	VSS	Ground.				
J11	IOVDD_3	Digital IO power supply 3.				
J12	PC6	ACMP0_CH6	EBI_A05 #0/1/2		LEU1_TX #0 I2C0_SDA #2	LES_CH6 #0 ETM_TCLK #2
J13	DECOUPLE	Decouple output for on-chip voltage regulator. An external capacitance of size $C_{DECOUPLE}$ is required at this pin.				
K1	PC0	ACMP0_CH0 DAC0_OUT0ALT #0/ OPAMP_OUT0ALT	EBI_A23 #0/1/2	TIM0_CC1 #4 PCNT0_S0IN #2	US0_TX #5 US1_TX #0 I2C0_SDA #4	LES_CH0 #0 PRS_CH2 #0
K2	PC1	ACMP0_CH1 DAC0_OUT0ALT #1/ OPAMP_OUT0ALT	EBI_A24 #0/1/2	TIM0_CC2 #4 PCNT0_S1IN #2	US0_RX #5 US1_RX #0 I2C0_SCL #4	LES_CH1 #0 PRS_CH3 #0
K3	IOVDD_4	Digital IO power supply 4.				
K11	VSS	Ground.				
K12	VSS	Ground.				
K13	PD8	BU_VIN				CMU_CLK1 #1
L1	PC2	ACMP0_CH2 DAC0_OUT0ALT #2/ OPAMP_OUT0ALT	EBI_A25 #0/1/2	TIM0_CDTI0 #4	US2_TX #0	LES_CH2 #0

BGA120 Pin# and Name		Pin Alternate Functionality / Description				
Pin #	Pin Name	Analog	EBI	Timers	Communication	Other
L2	PC3	ACMP0_CH3 DAC0_OUT0ALT #3/ OPAMP_OUT0ALT	EBI_NANDREn #0/1/2	TIM0_CDTI1 #4	US2_RX #0	LES_CH3 #0
L3	PA7	LCD_SEG35	EBI_CSTFT #0/1/2			
L4	IOVDD_5	Digital IO power supply 5.				
L5	VSS	Ground.				
L6	VSS	Ground.				
L7	IOVDD_6	Digital IO power supply 6.				
L8	PB9		EBI_A03 #0/1/2		U1_TX #2	
L9	PB10		EBI_A04 #0/1/2		U1_RX #2	
L10	PD0	ADC0_CH0 DAC0_OUT0ALT #4/ OPAMP_OUT0ALT OPAMP_OUT2 #1		PCNT2_S0IN #0	US1_TX #1	
L11	PD1	ADC0_CH1 DAC0_OUT1ALT #4/ OPAMP_OUT1ALT		TIM0_CC0 #3 PCNT2_S1IN #0	US1_RX #1	DBG_SWO #2
L12	PD4	ADC0_CH4 OPAMP_P2			LEU0_TX #0	ETM_TD2 #0/2
L13	PD7	ADC0_CH7 / DAC0_N1 / OPAMP_N1		TIM1_CC1 #4 LE-TIM0_OUT1 #0 PCNT0_S1IN #3	US1_TX #2 I2C0_SCL #1	CMU_CLK0 #2 LES_ALTEX1 #0 ACMP1_O #2 ETM_TCLK #0
M1	PB7	LFXTAL_P		TIM1_CC0 #3	US0_TX #4 US1_CLK #0	
M2	PC4	ACMP0_CH4 / DAC0_P0 / OPAMP_P0	EBI_A26 #0/1/2	TIM0_CDTI2 #4 LE-TIM0_OUT0 #3 PCNT1_S0IN #0	US2_CLK #0 I2C1_SDA #0	LES_CH4 #0
M3	PA8	LCD_SEG36	EBI_DCLK #0/1/2	TIM2_CC0 #0		
M4	PA10	LCD_SEG38	EBI_VSNC #0/1/2	TIM2_CC2 #0		
M5	PA13	LCD_BCAP_N	EBI_A01 #0/1/2	TIM2_CC1 #1		
M6	PA14	LCD_BEXT	EBI_A02 #0/1/2	TIM2_CC2 #1		
M7	RESETn	Reset input, active low. To apply an external reset source to this pin, it is required to only drive this pin low during reset, and let the internal pull-up ensure that reset is released.				
M8	AVSS_1	Analog ground 1.				
M9	AVDD_2	Analog power supply 2.				
M10	AVDD_1	Analog power supply 1.				
M11	AVSS_0	Analog ground 0.				
M12	PD3	ADC0_CH3 OPAMP_N2		TIM0_CC2 #3	US1_CS #1	ETM_TD1 #0/2

BGA120 Pin# and Name		Pin Alternate Functionality / Description				
Pin #	Pin Name	Analog	EBI	Timers	Communication	Other
M13	PD6	ADC0_CH6 / DAC0_P1 / OPAMP_P1		TIM1_CC0 #4 LE-TIM0_OUT0 #0 PCNT0_S0IN #3	US1_RX #2 I2C0_SDA #1	LES_ALTEX0 #0 ACMP0_O #2 ETM_TD0 #0
N1	PB8	LFXTAL_N		TIM1_CC1 #3	US0_RX #4 US1_CS #0	
N2	PC5	ACMP0_CH5 / DAC0_N0 / OPAMP_N0	EBI_NANDWEn #0/1/2	LETIM0_OUT1 #3 PCNT1_S1IN #0	US2_CS #0 I2C1_SCL #0	LES_CH5 #0
N3	PA9	LCD_SEG37	EBI_DTEN #0/1/2	TIM2_CC1 #0		
N4	PA11	LCD_SEG39	EBI_HSNC #0/1/2			
N5	PA12	LCD_BCAP_P	EBI_A00 #0/1/2	TIM2_CC0 #1		
N6	PB11	DAC0_OUT0 / OPAMP_OUT0		TIM1_CC2 #3 LE-TIM0_OUT0 #1	I2C1_SDA #1	
N7	PB12	DAC0_OUT1 / OPAMP_OUT1		LETIM0_OUT1 #1	I2C1_SCL #1	
N8	AVSS_2	Analog ground 2.				
N9	PB13	HFXTAL_P			US0_CLK #4/5 LEU0_TX #1	
N10	PB14	HFXTAL_N			US0_CS #4/5 LEU0_RX #1	
N11	AVDD_0	Analog power supply 0.				
N12	PD2	ADC0_CH2	EBI_A27 #0/1/2	TIM0_CC1 #3	USB_DMPU #0 US1_CLK #1	DBG_SWO #3
N13	PD5	ADC0_CH5 OPAMP_OUT2 #0			LEU0_RX #0	ETM_TD3 #0/2

5.22.2 Alternate Functionality Pinout

A wide selection of alternate functionality is available for multiplexing to various pins. This is shown in the following table. The table shows the name of the alternate functionality in the first column, followed by columns showing the possible LOCATION bitfield settings.

Note: Some functionality, such as analog interfaces, do not have alternate settings or a LOCATION bitfield. In these cases, the pinout is shown in the column corresponding to LOCATION 0.

Table 5.65. Alternate Functionality Overview

Alternate	LOCATION							
Functionality	0	1	2	3	4	5	6	Description
ACMP0_CH0	PC0							Analog comparator ACMP0, channel 0.
ACMP0_CH1	PC1							Analog comparator ACMP0, channel 1.
ACMP0_CH2	PC2							Analog comparator ACMP0, channel 2.
ACMP0_CH3	PC3							Analog comparator ACMP0, channel 3.
ACMP0_CH4	PC4							Analog comparator ACMP0, channel 4.
ACMP0_CH5	PC5							Analog comparator ACMP0, channel 5.
ACMP0_CH6	PC6							Analog comparator ACMP0, channel 6.
ACMP0_CH7	PC7							Analog comparator ACMP0, channel 7.
ACMP0_O	PE13	PE2	PD6					Analog comparator ACMP0, digital output.
ACMP1_CH0	PC8							Analog comparator ACMP1, channel 0.
ACMP1_CH1	PC9							Analog comparator ACMP1, channel 1.
ACMP1_CH2	PC10							Analog comparator ACMP1, channel 2.
ACMP1_CH3	PC11							Analog comparator ACMP1, channel 3.
ACMP1_CH4	PC12							Analog comparator ACMP1, channel 4.
ACMP1_CH5	PC13							Analog comparator ACMP1, channel 5.
ACMP1_CH6	PC14							Analog comparator ACMP1, channel 6.
ACMP1_CH7	PC15							Analog comparator ACMP1, channel 7.
ACMP1_O	PF2	PE3	PD7					Analog comparator ACMP1, digital output.
ADC0_CH0	PD0							Analog to digital converter ADC0, input channel number 0.
ADC0_CH1	PD1							Analog to digital converter ADC0, input channel number 1.
ADC0_CH2	PD2							Analog to digital converter ADC0, input channel number 2.
ADC0_CH3	PD3							Analog to digital converter ADC0, input channel number 3.
ADC0_CH4	PD4							Analog to digital converter ADC0, input channel number 4.
ADC0_CH5	PD5							Analog to digital converter ADC0, input channel number 5.
ADC0_CH6	PD6							Analog to digital converter ADC0, input channel number 6.

Alternate	LOCATION							
Functionality	0	1	2	3	4	5	6	Description
ADC0_CH7	PD7							Analog to digital converter ADC0, input channel number 7.
BOOT_RX	PE11							Bootloader RX.
BOOT_TX	PE10							Bootloader TX.
BU_STAT	PE3							Backup Power Domain status, whether or not the system is in backup mode
BU_VIN	PD8							Battery input for Backup Power Domain
BU_VOUT	PE2							Power output for Backup Power Domain
CMU_CLK0	PA2	PC12	PD7					Clock Management Unit, clock output number 0.
CMU_CLK1	PA1	PD8	PE12					Clock Management Unit, clock output number 1.
DAC0_OUT0 / OPAMP_OUT0	PB11							Digital to Analog Converter DAC0_OUT0 /OPAMP output channel number 0.
DAC0_OUT0ALT / OPAMP_OUT0ALT	PC0	PC1	PC2	PC3	PD0			Digital to Analog Converter DAC0_OUT0ALT / OPAMP alternative output for channel 0.
DAC0_OUT1 / OPAMP_OUT1	PB12							Digital to Analog Converter DAC0_OUT1 / OPAMP output channel number 1.
DAC0_OUT1ALT / OPAMP_OUT1ALT	PC12	PC13	PC14	PC15	PD1			Digital to Analog Converter DAC0_OUT1ALT / OPAMP alternative output for channel 1.
DBG_SWCLK	PF0	PF0	PF0	PF0				Debug-interface Serial Wire clock input. Note that this function is enabled to pin out of reset, and has a built-in pull down.
DBG_SWDIO	PF1	PF1	PF1	PF1				Debug-interface Serial Wire data input / output. Note that this function is enabled to pin out of reset, and has a built-in pull up.
DBG_SWO	PF2	PC15	PD1	PD2				Debug-interface Serial Wire viewer Output. Note that this function is not enabled after reset, and must be enabled by software to be used.
EBI_A00	PA12	PA12	PA12					External Bus Interface (EBI) address output pin 00.
EBI_A01	PA13	PA13	PA13					External Bus Interface (EBI) address output pin 01.
EBI_A02	PA14	PA14	PA14					External Bus Interface (EBI) address output pin 02.
EBI_A03	PB9	PB9	PB9					External Bus Interface (EBI) address output pin 03.
EBI_A04	PB10	PB10	PB10					External Bus Interface (EBI) address output pin 04.
EBI_A05	PC6	PC6	PC6					External Bus Interface (EBI) address output pin 05.
EBI_A06	PC7	PC7	PC7					External Bus Interface (EBI) address output pin 06.
EBI_A07	PE0	PE0	PE0					External Bus Interface (EBI) address output pin 07.
EBI_A08	PE1	PE1	PE1					External Bus Interface (EBI) address output pin 08.
EBI_A09	PE2	PC9	PC9					External Bus Interface (EBI) address output pin 09.
EBI_A10	PE3	PC10	PC10					External Bus Interface (EBI) address output pin 10.
EBI_A11	PE4	PE4	PE4					External Bus Interface (EBI) address output pin 11.
EBI_A12	PE5	PE5	PE5					External Bus Interface (EBI) address output pin 12.

Alternate	LOCATION							
Functionality	0	1	2	3	4	5	6	Description
EBI_A13	PE6	PE6	PE6					External Bus Interface (EBI) address output pin 13.
EBI_A14	PE7	PE7	PE7					External Bus Interface (EBI) address output pin 14.
EBI_A15	PC8	PC8	PC8					External Bus Interface (EBI) address output pin 15.
EBI_A16	PB0	PB0	PB0					External Bus Interface (EBI) address output pin 16.
EBI_A17	PB1	PB1	PB1					External Bus Interface (EBI) address output pin 17.
EBI_A18	PB2	PB2	PB2					External Bus Interface (EBI) address output pin 18.
EBI_A19	PB3	PB3	PB3					External Bus Interface (EBI) address output pin 19.
EBI_A20	PB4	PB4	PB4					External Bus Interface (EBI) address output pin 20.
EBI_A21	PB5	PB5	PB5					External Bus Interface (EBI) address output pin 21.
EBI_A22	PB6	PB6	PB6					External Bus Interface (EBI) address output pin 22.
EBI_A23	PC0	PC0	PC0					External Bus Interface (EBI) address output pin 23.
EBI_A24	PC1	PC1	PC1					External Bus Interface (EBI) address output pin 24.
EBI_A25	PC2	PC2	PC2					External Bus Interface (EBI) address output pin 25.
EBI_A26	PC4	PC4	PC4					External Bus Interface (EBI) address output pin 26.
EBI_A27	PD2	PD2	PD2					External Bus Interface (EBI) address output pin 27.
EBI_AD00	PE8	PE8	PE8					External Bus Interface (EBI) address and data input / output pin 00.
EBI_AD01	PE9	PE9	PE9					External Bus Interface (EBI) address and data input / output pin 01.
EBI_AD02	PE10	PE10	PE10					External Bus Interface (EBI) address and data input / output pin 02.
EBI_AD03	PE11	PE11	PE11					External Bus Interface (EBI) address and data input / output pin 03.
EBI_AD04	PE12	PE12	PE12					External Bus Interface (EBI) address and data input / output pin 04.
EBI_AD05	PE13	PE13	PE13					External Bus Interface (EBI) address and data input / output pin 05.
EBI_AD06	PE14	PE14	PE14					External Bus Interface (EBI) address and data input / output pin 06.
EBI_AD07	PE15	PE15	PE15					External Bus Interface (EBI) address and data input / output pin 07.
EBI_AD08	PA15	PA15	PA15					External Bus Interface (EBI) address and data input / output pin 08.
EBI_AD09	PA0	PA0	PA0					External Bus Interface (EBI) address and data input / output pin 09.
EBI_AD10	PA1	PA1	PA1					External Bus Interface (EBI) address and data input / output pin 10.
EBI_AD11	PA2	PA2	PA2					External Bus Interface (EBI) address and data input / output pin 11.
EBI_AD12	PA3	PA3	PA3					External Bus Interface (EBI) address and data input / output pin 12.

Alternate	LOCATION							
Functionality	0	1	2	3	4	5	6	Description
EBI_AD13	PA4	PA4	PA4					External Bus Interface (EBI) address and data input / output pin 13.
EBI_AD14	PA5	PA5	PA5					External Bus Interface (EBI) address and data input / output pin 14.
EBI_AD15	PA6	PA6	PA6					External Bus Interface (EBI) address and data input / output pin 15.
EBI_ALE	PF3	PC11	PC11					External Bus Interface (EBI) Address Latch Enable output.
EBI_ARDY	PF2	PF2	PF2					External Bus Interface (EBI) Hardware Ready Control input.
EBI_BL0	PF6	PF6	PF6					External Bus Interface (EBI) Byte Lane/Enable pin 0.
EBI_BL1	PF7	PF7	PF7					External Bus Interface (EBI) Byte Lane/Enable pin 1.
EBI_CS0	PD9	PD9	PD9					External Bus Interface (EBI) Chip Select output 0.
EBI_CS1	PD10	PD10	PD10					External Bus Interface (EBI) Chip Select output 1.
EBI_CS2	PD11	PD11	PD11					External Bus Interface (EBI) Chip Select output 2.
EBI_CS3	PD12	PD12	PD12					External Bus Interface (EBI) Chip Select output 3.
EBI_CSTFT	PA7	PA7	PA7					External Bus Interface (EBI) Chip Select output TFT.
EBI_DCLK	PA8	PA8	PA8					External Bus Interface (EBI) TFT Dot Clock pin.
EBI_DTEN	PA9	PA9	PA9					External Bus Interface (EBI) TFT Data Enable pin.
EBI_HSNC	PA11	PA11	PA11					External Bus Interface (EBI) TFT Horizontal Synchronization pin.
EBI_NANDREn	PC3	PC3	PC3					External Bus Interface (EBI) NAND Read Enable output.
EBI_NANDWEn	PC5	PC5	PC5					External Bus Interface (EBI) NAND Write Enable output.
EBI_REn	PF5	PF9	PF5					External Bus Interface (EBI) Read Enable output.
EBI_VSNC	PA10	PA10	PA10					External Bus Interface (EBI) TFT Vertical Synchronization pin.
EBI_WEn	PF4	PF8	PF4					External Bus Interface (EBI) Write Enable output.
ETM_TCLK	PD7	PF8	PC6	PA6				Embedded Trace Module ETM clock .
ETM_TD0	PD6	PF9	PC7	PA2				Embedded Trace Module ETM data 0.
ETM_TD1	PD3	PD13	PD3	PA3				Embedded Trace Module ETM data 1.
ETM_TD2	PD4	PB15	PD4	PA4				Embedded Trace Module ETM data 2.
ETM_TD3	PD5	PF3	PD5	PA5				Embedded Trace Module ETM data 3.
GPIO_EM4WU0	PA0							Pin can be used to wake the system up from EM4
GPIO_EM4WU1	PA6							Pin can be used to wake the system up from EM4
GPIO_EM4WU2	PC9							Pin can be used to wake the system up from EM4
GPIO_EM4WU3	PF1							Pin can be used to wake the system up from EM4

Alternate	LOCATION							
Functionality	0	1	2	3	4	5	6	Description
GPIO_EM4WU4	PF2							Pin can be used to wake the system up from EM4
GPIO_EM4WU5	PE13							Pin can be used to wake the system up from EM4
HFXTAL_N	PB14							High Frequency Crystal negative pin. Also used as external optional clock input pin.
HFXTAL_P	PB13							High Frequency Crystal positive pin.
I2C0_SCL	PA1	PD7	PC7	PD15	PC1	PF1	PE13	I2C0 Serial Clock Line input / output.
I2C0_SDA	PA0	PD6	PC6	PD14	PC0	PF0	PE12	I2C0 Serial Data input / output.
I2C1_SCL	PC5	PB12	PE1					I2C1 Serial Clock Line input / output.
I2C1_SDA	PC4	PB11	PE0					I2C1 Serial Data input / output.
LCD_BCAP_N	PA13							LCD voltage booster (optional), boost capacitor, negative pin. If using the LCD voltage booster, connect a 22 nF capacitor between LCD_BCAP_N and LCD_BCAP_P.
LCD_BCAP_P	PA12							LCD voltage booster (optional), boost capacitor, positive pin. If using the LCD voltage booster, connect a 22 nF capacitor between LCD_BCAP_N and LCD_BCAP_P.
LCD_BEXT	PA14							LCD voltage booster (optional), boost output. If using the LCD voltage booster, connect a 1 uF capacitor between this pin and VSS. An external LCD voltage may also be applied to this pin if the booster is not enabled. If AVDD is used directly as the LCD supply voltage, this pin may be left unconnected or used as a GPIO.
LCD_COM0	PE4							LCD driver common line number 0.
LCD_COM1	PE5							LCD driver common line number 1.
LCD_COM2	PE6							LCD driver common line number 2.
LCD_COM3	PE7							LCD driver common line number 3.
LCD_SEG0	PF2							LCD segment line 0. Segments 0, 1, 2 and 3 are controlled by SEGEN0.
LCD_SEG1	PF3							LCD segment line 1. Segments 0, 1, 2 and 3 are controlled by SEGEN0.
LCD_SEG2	PF4							LCD segment line 2. Segments 0, 1, 2 and 3 are controlled by SEGEN0.
LCD_SEG3	PF5							LCD segment line 3. Segments 0, 1, 2 and 3 are controlled by SEGEN0.
LCD_SEG4	PE8							LCD segment line 4. Segments 4, 5, 6 and 7 are controlled by SEGEN1.
LCD_SEG5	PE9							LCD segment line 5. Segments 4, 5, 6 and 7 are controlled by SEGEN1.
LCD_SEG6	PE10							LCD segment line 6. Segments 4, 5, 6 and 7 are controlled by SEGEN1.

Alternate	LOCATION							
Functionality	0	1	2	3	4	5	6	Description
LCD_SEG7	PE11							LCD segment line 7. Segments 4, 5, 6 and 7 are controlled by SEGEN1.
LCD_SEG8	PE12							LCD segment line 8. Segments 8, 9, 10 and 11 are controlled by SEGEN2.
LCD_SEG9	PE13							LCD segment line 9. Segments 8, 9, 10 and 11 are controlled by SEGEN2.
LCD_SEG10	PE14							LCD segment line 10. Segments 8, 9, 10 and 11 are controlled by SEGEN2.
LCD_SEG11	PE15							LCD segment line 11. Segments 8, 9, 10 and 11 are controlled by SEGEN2.
LCD_SEG12	PA15							LCD segment line 12. Segments 12, 13, 14 and 15 are controlled by SEGEN3.
LCD_SEG13	PA0							LCD segment line 13. Segments 12, 13, 14 and 15 are controlled by SEGEN3.
LCD_SEG14	PA1							LCD segment line 14. Segments 12, 13, 14 and 15 are controlled by SEGEN3.
LCD_SEG15	PA2							LCD segment line 15. Segments 12, 13, 14 and 15 are controlled by SEGEN3.
LCD_SEG16	PA3							LCD segment line 16. Segments 16, 17, 18 and 19 are controlled by SEGEN4.
LCD_SEG17	PA4							LCD segment line 17. Segments 16, 17, 18 and 19 are controlled by SEGEN4.
LCD_SEG18	PA5							LCD segment line 18. Segments 16, 17, 18 and 19 are controlled by SEGEN4.
LCD_SEG19	PA6							LCD segment line 19. Segments 16, 17, 18 and 19 are controlled by SEGEN4.
LCD_SEG20/ LCD_COM4	PB3							LCD segment line 20. Segments 20, 21, 22 and 23 are controlled by SEGEN5. This pin may also be used as LCD COM line 4
LCD_SEG21/ LCD_COM5	PB4							LCD segment line 21. Segments 20, 21, 22 and 23 are controlled by SEGEN5. This pin may also be used as LCD COM line 5
LCD_SEG22/ LCD_COM6	PB5							LCD segment line 22. Segments 20, 21, 22 and 23 are controlled by SEGEN5. This pin may also be used as LCD COM line 6
LCD_SEG23/ LCD_COM7	PB6							LCD segment line 23. Segments 20, 21, 22 and 23 are controlled by SEGEN5. This pin may also be used as LCD COM line 7
LCD_SEG24	PF6							LCD segment line 24. Segments 24, 25, 26 and 27 are controlled by SEGEN6.
LCD_SEG25	PF7							LCD segment line 25. Segments 24, 25, 26 and 27 are controlled by SEGEN6.
LCD_SEG26	PF8							LCD segment line 26. Segments 24, 25, 26 and 27 are controlled by SEGEN6.
LCD_SEG27	PF9							LCD segment line 27. Segments 24, 25, 26 and 27 are controlled by SEGEN6.

Alternate	LOCATION							
Functionality	0	1	2	3	4	5	6	Description
LCD_SEG28	PD9							LCD segment line 28. Segments 28, 29, 30 and 31 are controlled by SEGEN7.
LCD_SEG29	PD10							LCD segment line 29. Segments 28, 29, 30 and 31 are controlled by SEGEN7.
LCD_SEG30	PD11							LCD segment line 30. Segments 28, 29, 30 and 31 are controlled by SEGEN7.
LCD_SEG31	PD12							LCD segment line 31. Segments 28, 29, 30 and 31 are controlled by SEGEN7.
LCD_SEG32	PB0							LCD segment line 32. Segments 32, 33, 34 and 35 are controlled by SEGEN8.
LCD_SEG33	PB1							LCD segment line 33. Segments 32, 33, 34 and 35 are controlled by SEGEN8.
LCD_SEG34	PB2							LCD segment line 34. Segments 32, 33, 34 and 35 are controlled by SEGEN8.
LCD_SEG35	PA7							LCD segment line 35. Segments 32, 33, 34 and 35 are controlled by SEGEN8.
LCD_SEG36	PA8							LCD segment line 36. Segments 36, 37, 38 and 39 are controlled by SEGEN9.
LCD_SEG37	PA9							LCD segment line 37. Segments 36, 37, 38 and 39 are controlled by SEGEN9.
LCD_SEG38	PA10							LCD segment line 38. Segments 36, 37, 38 and 39 are controlled by SEGEN9.
LCD_SEG39	PA11							LCD segment line 39. Segments 36, 37, 38 and 39 are controlled by SEGEN9.
LES_ALTEX0	PD6							LESENSE alternate exite output 0.
LES_ALTEX1	PD7							LESENSE alternate exite output 1.
LES_ALTEX2	PA3							LESENSE alternate exite output 2.
LES_ALTEX3	PA4							LESENSE alternate exite output 3.
LES_ALTEX4	PA5							LESENSE alternate exite output 4.
LES_ALTEX5	PE11							LESENSE alternate exite output 5.
LES_ALTEX6	PE12							LESENSE alternate exite output 6.
LES_ALTEX7	PE13							LESENSE alternate exite output 7.
LES_CH0	PC0							LESENSE channel 0.
LES_CH1	PC1							LESENSE channel 1.
LES_CH2	PC2							LESENSE channel 2.
LES_CH3	PC3							LESENSE channel 3.
LES_CH4	PC4							LESENSE channel 4.
LES_CH5	PC5							LESENSE channel 5.
LES_CH6	PC6							LESENSE channel 6.
LES_CH7	PC7							LESENSE channel 7.
LES_CH8	PC8							LESENSE channel 8.

Alternate	LOCATION							
Functionality	0	1	2	3	4	5	6	Description
LES_CH9	PC9							LESENSE channel 9.
LES_CH10	PC10							LESENSE channel 10.
LES_CH11	PC11							LESENSE channel 11.
LES_CH12	PC12							LESENSE channel 12.
LES_CH13	PC13							LESENSE channel 13.
LES_CH14	PC14							LESENSE channel 14.
LES_CH15	PC15							LESENSE channel 15.
LETIM0_OUT0	PD6	PB11	PF0	PC4				Low Energy Timer LETIM0, output channel 0.
LETIM0_OUT1	PD7	PB12	PF1	PC5				Low Energy Timer LETIM0, output channel 1.
LEU0_RX	PD5	PB14	PE15	PF1	PA0			LEUART0 Receive input.
LEU0_TX	PD4	PB13	PE14	PF0	PF2			LEUART0 Transmit output. Also used as receive input in half duplex communication.
LEU1_RX	PC7	PA6						LEUART1 Receive input.
LEU1_TX	PC6	PA5						LEUART1 Transmit output. Also used as receive input in half duplex communication.
LFXTAL_N	PB8							Low Frequency Crystal (typically 32.768 kHz) negative pin. Also used as an optional external clock input pin.
LFXTAL_P	PB7							Low Frequency Crystal (typically 32.768 kHz) positive pin.
OPAMP_N0 / DAC0_N0	PC5							Operational Amplifier 0 external negative input.
OPAMP_N1 / DAC0_N1	PD7							Operational Amplifier 1 external negative input.
OPAMP_N2	PD3							Operational Amplifier 2 external negative input.
OPAMP_OUT2	PD5	PD0						Operational Amplifier 2 output.
OPAMP_P0 / DAC0_P0	PC4							Operational Amplifier 0 external positive input.
OPAMP_P1 / DAC0_P1	PD6							Operational Amplifier 1 external positive input.
OPAMP_P2	PD4							Operational Amplifier 2 external positive input.
PCNT0_S0IN	PC13	PE0	PC0	PD6				Pulse Counter PCNT0 input number 0.
PCNT0_S1IN	PC14	PE1	PC1	PD7				Pulse Counter PCNT0 input number 1.
PCNT1_S0IN	PC4	PB3						Pulse Counter PCNT1 input number 0.
PCNT1_S1IN	PC5	PB4						Pulse Counter PCNT1 input number 1.
PCNT2_S0IN	PD0	PE8						Pulse Counter PCNT2 input number 0.
PCNT2_S1IN	PD1	PE9						Pulse Counter PCNT2 input number 1.
PRS_CH0	PA0	PF3						Peripheral Reflex System PRS, channel 0.
PRS_CH1	PA1	PF4						Peripheral Reflex System PRS, channel 1.
PRS_CH2	PC0	PF5						Peripheral Reflex System PRS, channel 2.

Alternate	LOCATION							
Functionality	0	1	2	3	4	5	6	Description
PRS_CH3	PC1	PE8						Peripheral Reflex System PRS, channel 3.
TIM0_CC0	PA0	PA0	PF6	PD1	PA0	PF0		Timer 0 Capture Compare input / output channel 0.
TIM0_CC1	PA1	PA1	PF7	PD2	PC0	PF1		Timer 0 Capture Compare input / output channel 1.
TIM0_CC2	PA2	PA2	PF8	PD3	PC1	PF2		Timer 0 Capture Compare input / output channel 2.
TIM0_CDTI0	PA3	PC13	PF3	PC13	PC2	PF3		Timer 0 Complimentary Dead Time Insertion channel 0.
TIM0_CDTI1	PA4	PC14	PF4	PC14	PC3	PF4		Timer 0 Complimentary Dead Time Insertion channel 1.
TIM0_CDTI2	PA5	PC15	PF5	PC15	PC4	PF5		Timer 0 Complimentary Dead Time Insertion channel 2.
TIM1_CC0	PC13	PE10	PB0	PB7	PD6			Timer 1 Capture Compare input / output channel 0.
TIM1_CC1	PC14	PE11	PB1	PB8	PD7			Timer 1 Capture Compare input / output channel 1.
TIM1_CC2	PC15	PE12	PB2	PB11	PC13			Timer 1 Capture Compare input / output channel 2.
TIM2_CC0	PA8	PA12	PC8					Timer 2 Capture Compare input / output channel 0.
TIM2_CC1	PA9	PA13	PC9					Timer 2 Capture Compare input / output channel 1.
TIM2_CC2	PA10	PA14	PC10					Timer 2 Capture Compare input / output channel 2.
TIM3_CC0	PE14	PE0						Timer 3 Capture Compare input / output channel 0.
TIM3_CC1	PE15	PE1						Timer 3 Capture Compare input / output channel 1.
TIM3_CC2	PA15	PE2						Timer 3 Capture Compare input / output channel 2.
U0_RX	PF7	PE1	PA4	PC15				UART0 Receive input.
U0_TX	PF6	PE0	PA3	PC14				UART0 Transmit output. Also used as receive input in half duplex communication.
U1_RX	PC13	PF11	PB10	PE3				UART1 Receive input.
U1_TX	PC12	PF10	PB9	PE2				UART1 Transmit output. Also used as receive input in half duplex communication.
US0_CLK	PE12	PE5	PC9	PC15	PB13	PB13		USART0 clock input / output.
US0_CS	PE13	PE4	PC8	PC14	PB14	PB14		USART0 chip select input / output.
US0_RX	PE11	PE6	PC10	PE12	PB8	PC1		USART0 Asynchronous Receive. USART0 Synchronous mode Main Input / Secondary Output (MISO).
US0_TX	PE10	PE7	PC11	PE13	PB7	PC0		USART0 Asynchronous Transmit.Also used as receive input in half duplex communication. USART0 Synchronous mode Main Output / Secondary Input (MOSI).
US1_CLK	PB7	PD2	PF0					USART1 clock input / output.
US1_CS	PB8	PD3	PF1					USART1 chip select input / output.
US1_RX	PC1	PD1	PD6					USART1 Asynchronous Receive. USART1 Synchronous mode Main Input / Secondary Output (MISO).

Alternate	LOCATION							
Functionality	0	1	2	3	4	5	6	Description
US1_TX	PC0	PD0	PD7					USART1 Asynchronous Transmit.Also used as receive input in half duplex communication. USART1 Synchronous mode Main Output / Secondary Input (MOSI).
US2_CLK	PC4	PB5						USART2 clock input / output.
US2_CS	PC5	PB6						USART2 chip select input / output.
US2_RX	PC3	PB4						USART2 Asynchronous Receive. USART2 Synchronous mode Main Input / Secondary Output (MISO).
US2_TX	PC2	PB3						USART2 Asynchronous Transmit.Also used as receive input in half duplex communication. USART2 Synchronous mode Main Output / Secondary Input (MOSI).
USB_DM	PF10							USB D- pin.
USB_DMPU	PD2							USB D- Pullup control.
USB_DP	PF11							USB D+ pin.
USB_ID	PF12							USB ID pin. Used in OTG mode.
USB_VBUS	USB_VBUS							USB 5 V VBUS input.
USB_VBUSEN	PF5							USB 5 V VBUS enable.
USB_VREGI	USB_VREGI							USB Input to internal 3.3 V regulator
USB_VREGO	USB_VREGO							USB Decoupling for internal 3.3 V USB regulator and regulator output

5.22.3 GPIO Pinout Overview

The specific GPIO pins available in EFM32WG995 are shown in the following table. Each GPIO port is organized as 16-bit ports indicated by letters A through F, and the individual pin on this port is indicated by a number from 15 down to 0.

Table 5.66. GPIO Pinout

Port	Pin 15	Pin 14	Pin 13	Pin 12	Pin 11	Pin 10	Pin 9	Pin 8	Pin 7	Pin 6	Pin 5	Pin 4	Pin 3	Pin 2	Pin 1	Pin 0
Port A	PA15	PA14	PA13	PA12	PA11	PA10	PA9	PA8	PA7	PA6	PA5	PA4	PA3	PA2	PA1	PA0
Port B	PB15	PB14	PB13	PB12	PB11	PB10	PB9	PB8	PB7	PB6	PB5	PB4	PB3	PB2	PB1	PB0
Port C	PC15	PC14	PC13	PC12	PC11	PC10	PC9	PC8	PC7	PC6	PC5	PC4	PC3	PC2	PC1	PC0
Port D	PD15	PD14	PD13	PD12	PD11	PD10	PD9	PD8	PD7	PD6	PD5	PD4	PD3	PD2	PD1	PD0
Port E	PE15	PE14	PE13	PE12	PE11	PE10	PE9	PE8	PE7	PE6	PE5	PE4	PE3	PE2	PE1	PE0
Port F	—	—	—	PF12	PF11	PF10	PF9	PF8	PF7	PF6	PF5	PF4	PF3	PF2	PF1	PF0

5.22.4 Opamp Pinout Overview

The specific opamp terminals available in EFM32WG995 is shown in the following figure.

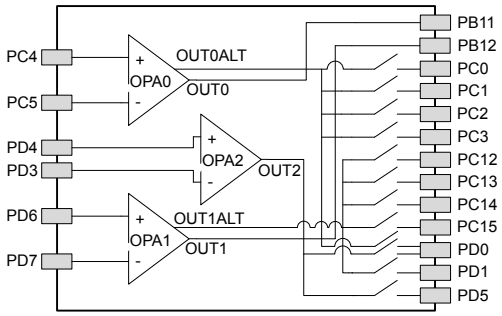

Figure 5.44. Opamp Pinout

6. BGA112 Package Specifications

6.1 BGA112 Package Dimensions

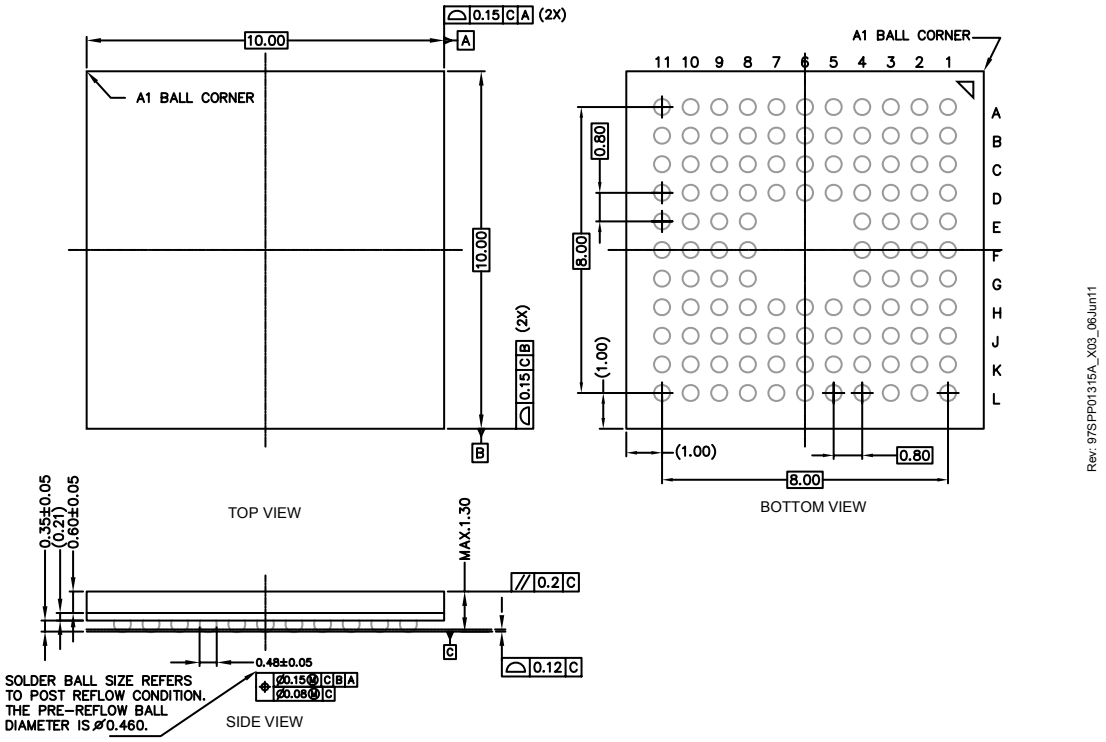

Figure 6.1. BGA112

Note:

1. The dimensions in parenthesis are reference.
2. Datum 'C' and seating plane are defined by the crown of the solder balls.
3. All dimensions are in millimeters.

6.2 BGA112 PCB Layout

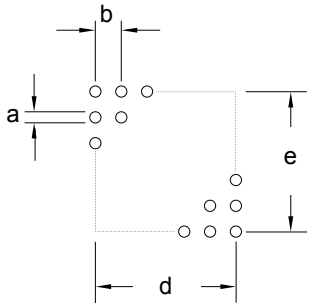

Figure 6.2. BGA112 PCB Land Pattern

Table 6.1. BGA112 PCB Land Pattern Dimensions (Dimensions in mm)

Symbol	Dim. (mm)
a	0.35
b	0.80
d	8.00
e	8.00

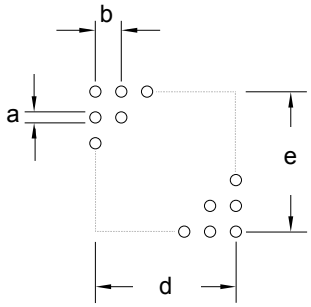

Figure 6.3. BGA112 PCB Solder Mask

Table 6.2. BGA112 PCB Solder Mask Dimensions (Dimensions in mm)

Symbol	Dim. (mm)
a	0.48
b	0.80
d	8.00
e	8.00

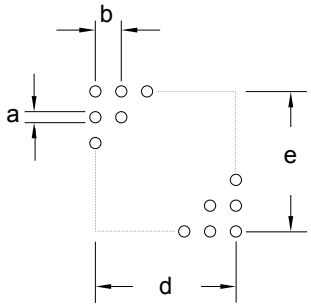

Figure 6.4. BGA112 PCB Stencil Design

Table 6.3. BGA112 PCB Stencil Design Dimensions (Dimensions in mm)

Symbol	Dim. (mm)
a	0.33
b	0.80
d	8.00
e	8.00

Note:

1. The drawings are not to scale.
2. All dimensions are in millimeters.
3. All drawings are subject to change without notice.
4. The PCB Land Pattern drawing is in compliance with IPC-7351B.
5. Stencil thickness 0.125 mm.
6. For detailed pin-positioning, see Pin Definitions.

6.3 BGA112 Package Marking

In the illustration below package fields and position are shown.

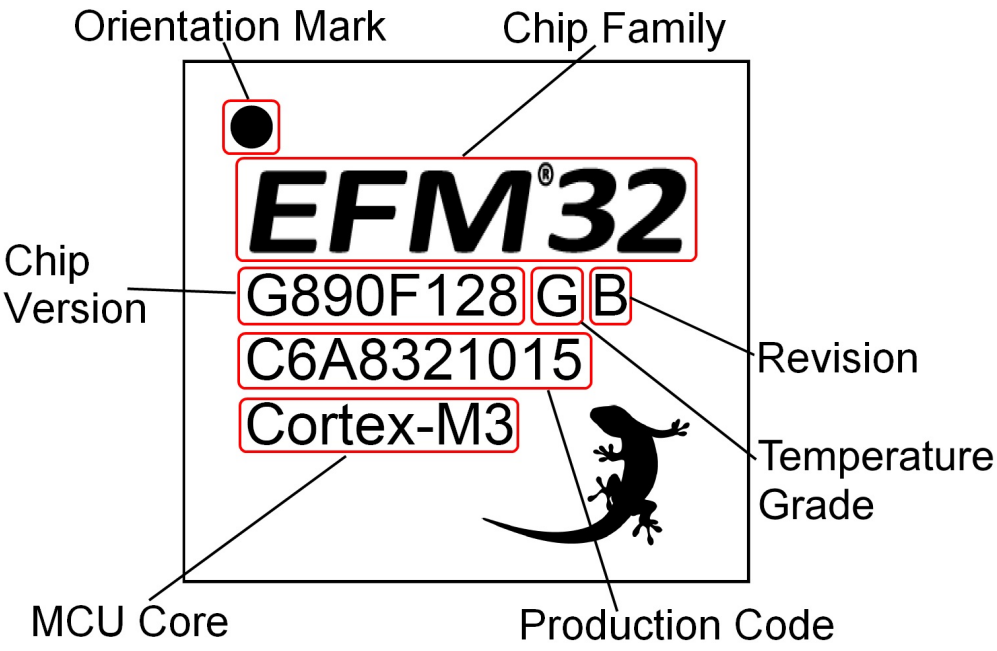

Figure 6.5. Example Chip Marking (Top View)

7. BGA120 Package Specifications

7.1 BGA120 Package Dimensions

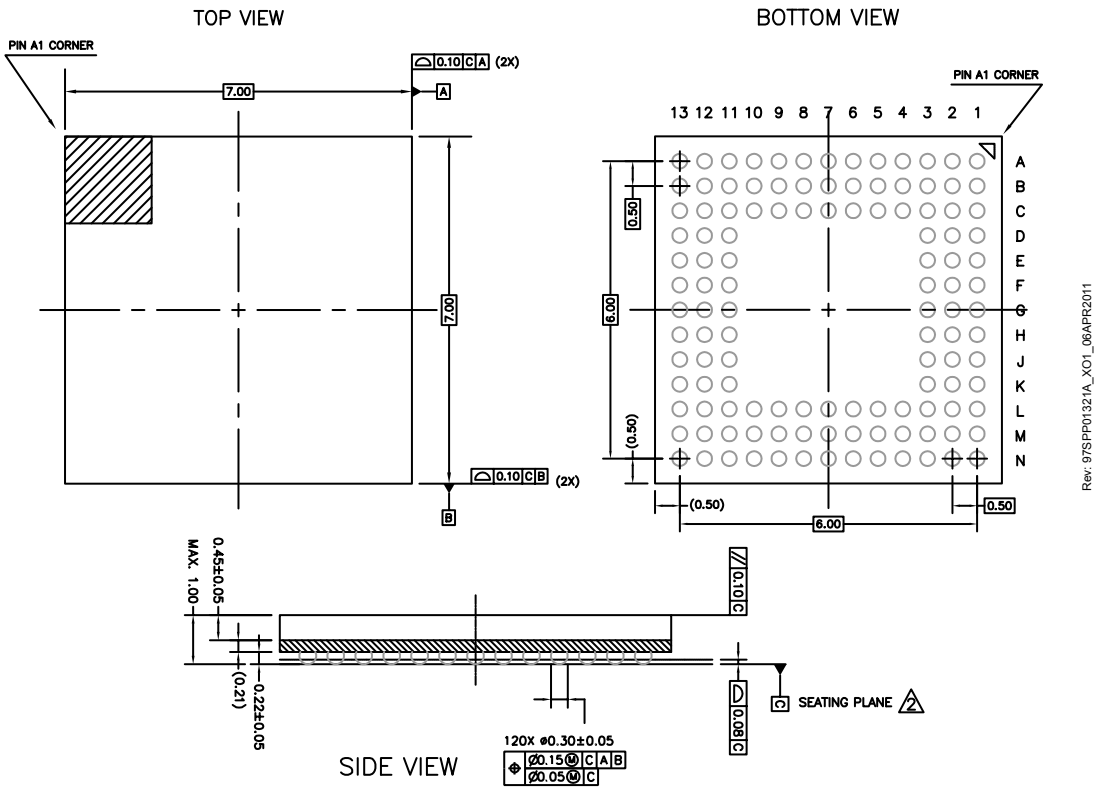

Figure 7.1. BGA120

Note:

1. The dimensions in parenthesis are reference.
2. Datum "C" and seating plane are defined by the crown of the soldier balls.
3. All dimensions are in millimeters.

7.2 BGA120 PCB Layout

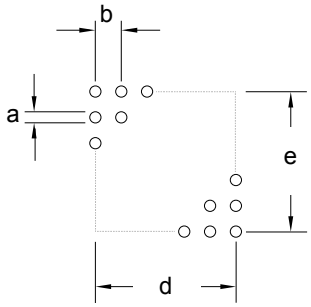

Figure 7.2. BGA120 PCB Land Pattern

Table 7.1. BGA120 PCB Land Pattern Dimensions (Dimensions in mm)

Symbol	Dim. (mm)
a	0.25
b	0.50
d	6.00
e	6.00

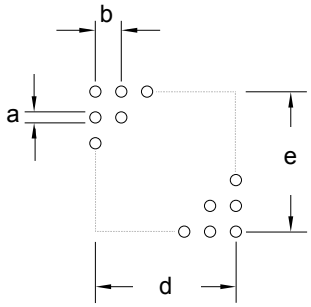

Figure 7.3. BGA120 PCB Solder Mask

Table 7.2. BGA120 PCB Solder Mask Dimensions (Dimensions in mm)

Symbol	Dim. (mm)
a	0.35
b	0.50
d	6.00
e	6.00

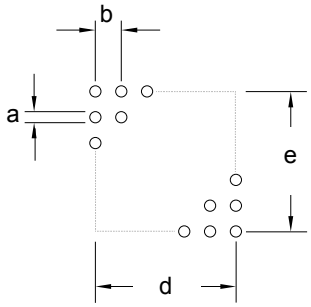

Figure 7.4. BGA120 PCB Stencil Design

Table 7.3. BGA120 PCB Stencil Design Dimensions (Dimensions in mm)

Symbol	Dim. (mm)
a	0.25
b	0.50
d	6.00
e	6.00

Note:

1. The drawings are not to scale.
2. All dimensions are in millimeters.
3. All drawings are subject to change without notice.
4. The PCB Land Pattern drawing is in compliance with IPC-7351B.
5. Stencil thickness 0.125 mm.
6. For detailed pin-positioning, see Pin Definitions.

7.3 BGA120 Package Marking

In the illustration below package fields and position are shown.

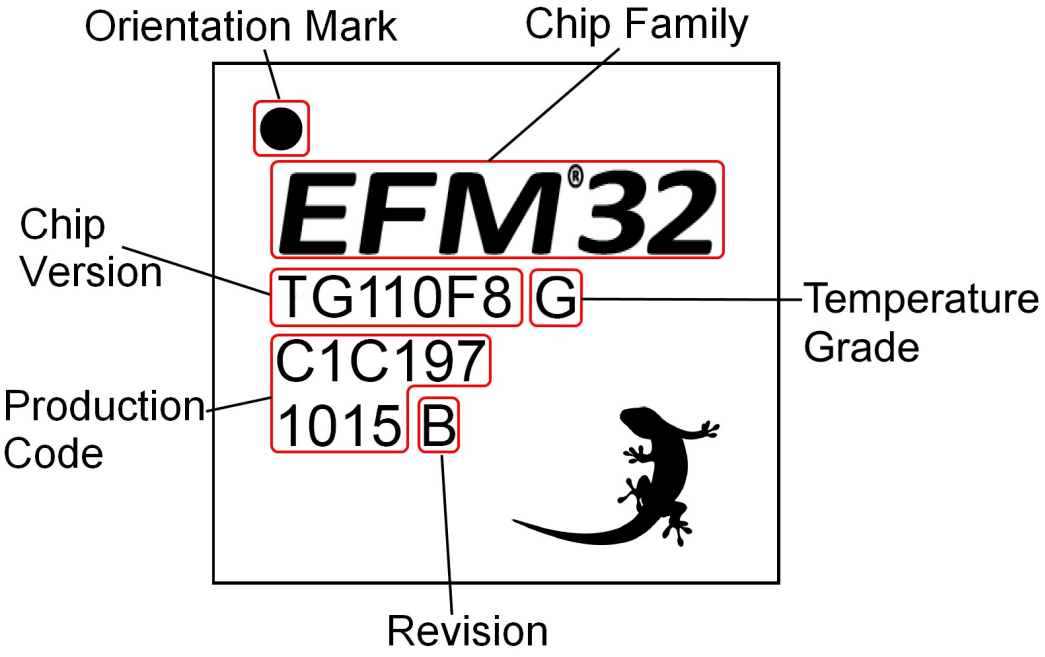

Figure 7.5. Example Chip Marking (Top View)

8. CSP81 Package Specifications

8.1 CSP81 Package Dimensions

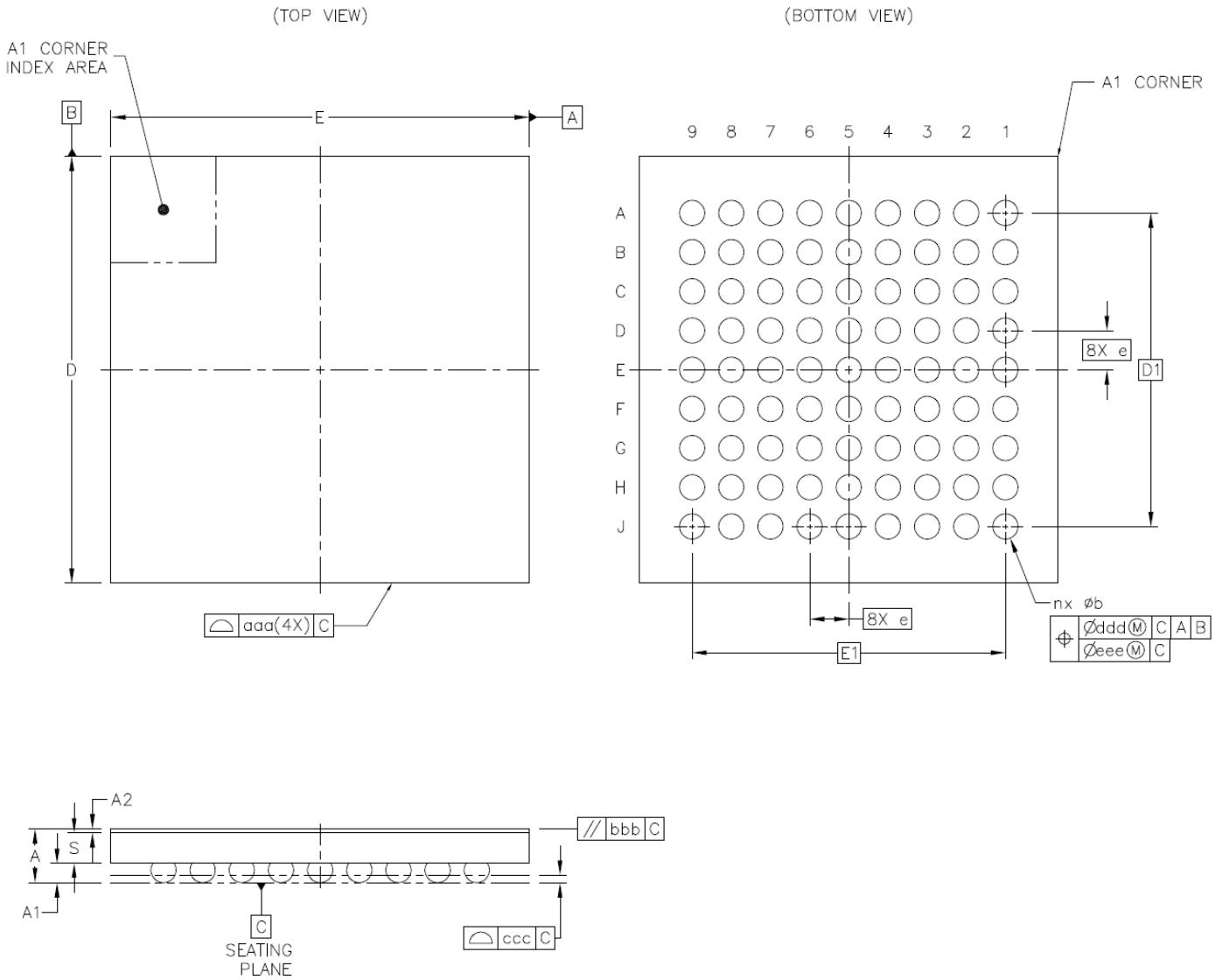

Figure 8.1. CSP81

Note:

1. All dimensions shown are in millimeters (mm) unless otherwise noted.
2. Dimensioning and Tolerancing per ANSI Y14.5M-1994.
3. Primary datum “C” and seating plane are defined by the spherical crowns of the solder balls.
4. Dimension “b” is measured at the maximum solder bump diameter, parallel to primary datum “C”.
5. Recommended card reflow profile is per the JEDEC/IPC J-STD-020C specification for Small Body Components.

Table 8.1. CSP81 (Dimensions in mm)

Symbol	Min	Nom	Max
A	0.491	0.55	0.609
A1	0.17	—	0.23
A2	0.036	—	0.044
b	0.23	—	0.29
S	0.3075	0.31	0.3125
D	4.355 BSC.		
E	4.275 BSC.		
e	0.40 BSC.		
D1	3.20 BSC.		
E1	3.20 BSC.		
n	81		
aaa	0.05		
bbb	0.10		
ccc	0.075		
ddd	0.15		
eee	0.05		

8.2 CSP81 PCB Layout

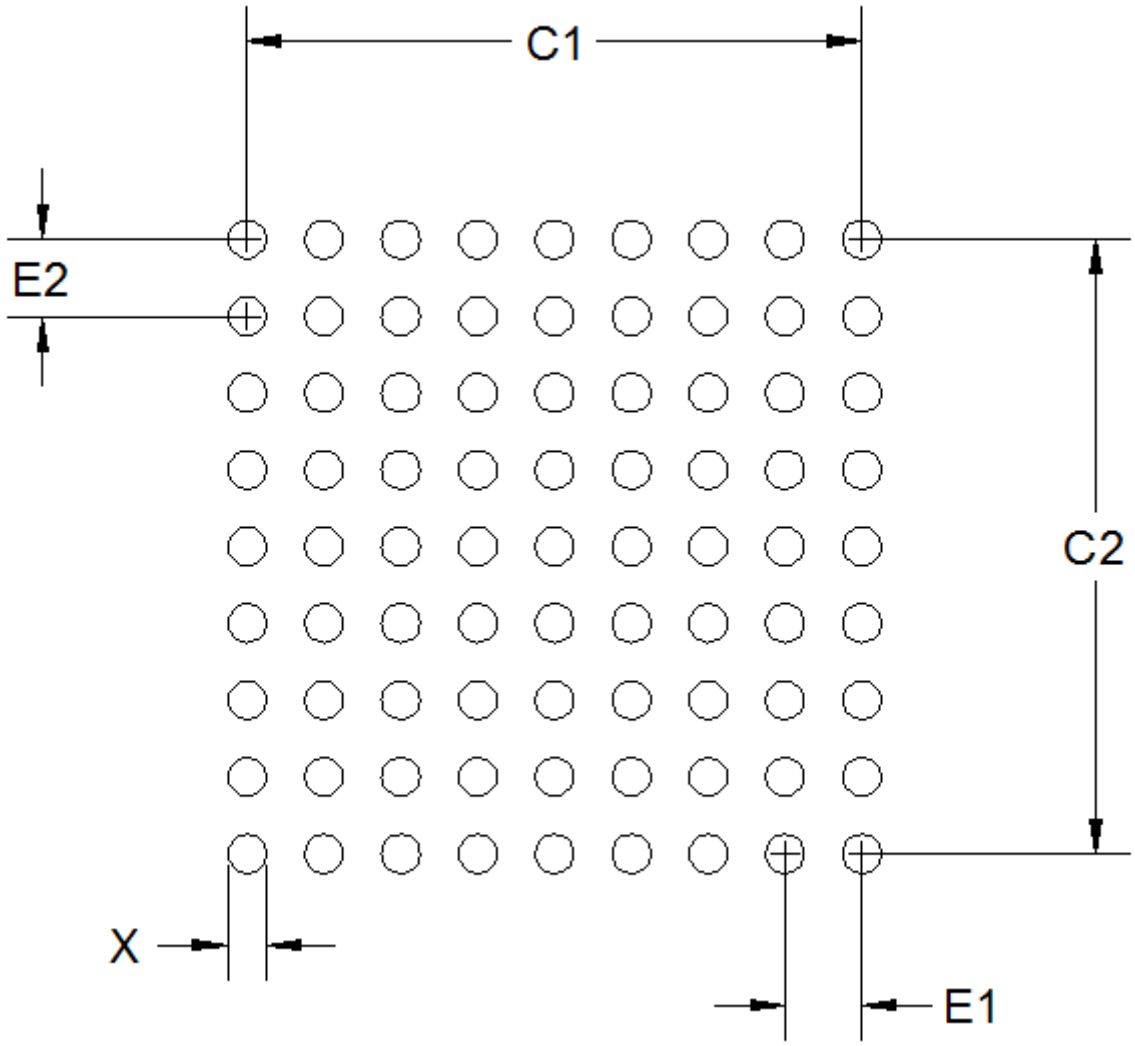

Figure 8.2. CSP81 PCB Land Pattern

Table 8.2. CSP81 PCB Land Pattern Dimensions (Dimensions in mm)

Symbol	Dim. (mm)
X	0.20
C1	3.20
C2	3.20
E1	0.40
E2	0.40

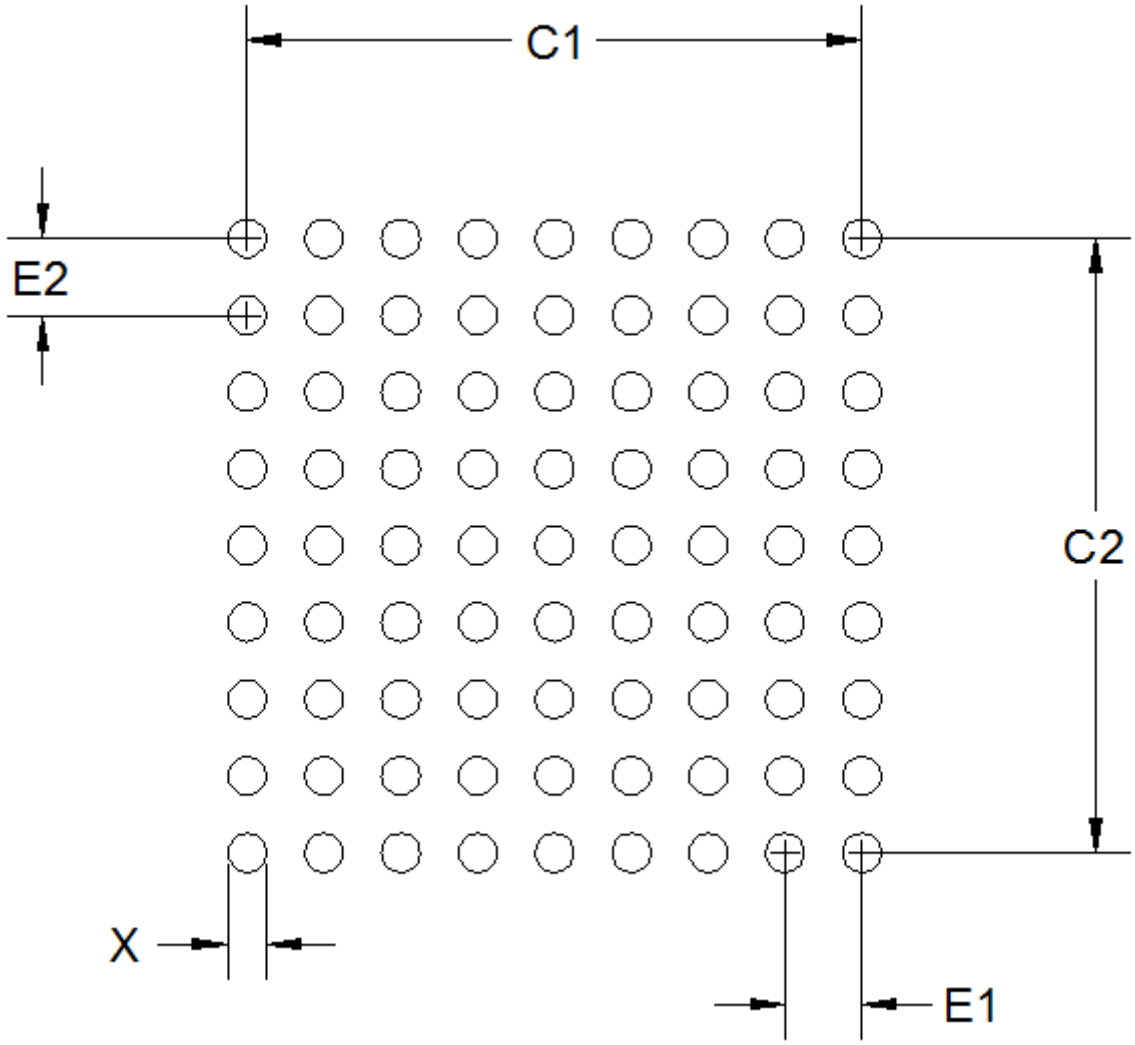

Figure 8.3. CSP81 PCB Solder Mask

Table 8.3. CSP81 PCB Solder Mask Dimensions (Dimensions in mm)

Symbol	Dim. (mm)
X	0.26
C1	3.20
C2	3.20
E1	0.40
E2	0.40

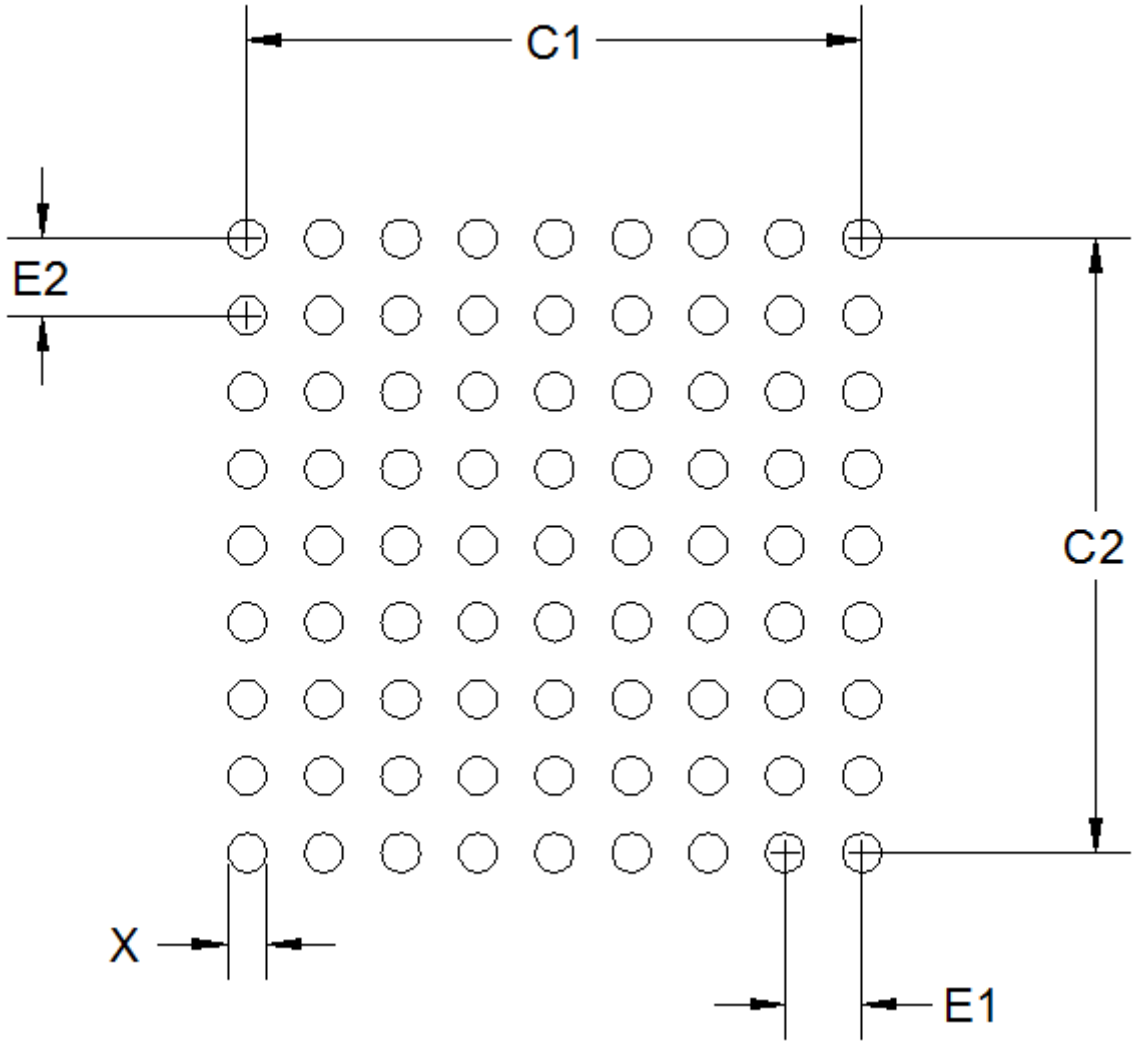

Figure 8.4. CSP81 PCB Stencil Design

Table 8.4. CSP81 PCB Stencil Design Dimensions (Dimensions in mm)

Symbol	Dim. (mm)
X	0.20
C1	3.20
C2	3.20
E1	0.40
E2	0.40

Note:

1. The drawings are not to scale.
2. All dimensions are in millimeters.
3. All drawings are subject to change without notice.
4. The PCB Land Pattern drawing is in compliance with IPC-7351B.
5. Stencil thickness 0.125 mm.
6. For detailed pin-positioning, see Pin Definitions.

8.3 CSP81 Package Marking

In the illustration below package fields and position are shown.

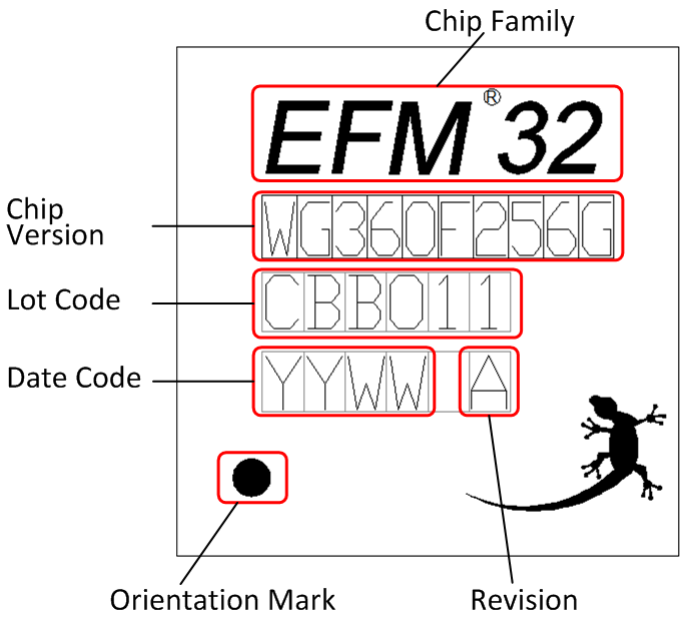

Figure 8.5. Example Chip Marking (Top View)

8.4 CSP81 Environmental

WLCSP devices can be handled and soldered using industry standard surface mount assembly techniques. However, because WLCSP devices are essentially a piece of silicon and are not encapsulated in plastic, they are susceptible to mechanical damage and may be sensitive to light. When WLCSPs must be used in an environment exposed to light, it may be necessary to cover the top and sides withan opaque material.

9. LQFP100 Package Specifications

9.1 LQFP100 Package Dimensions

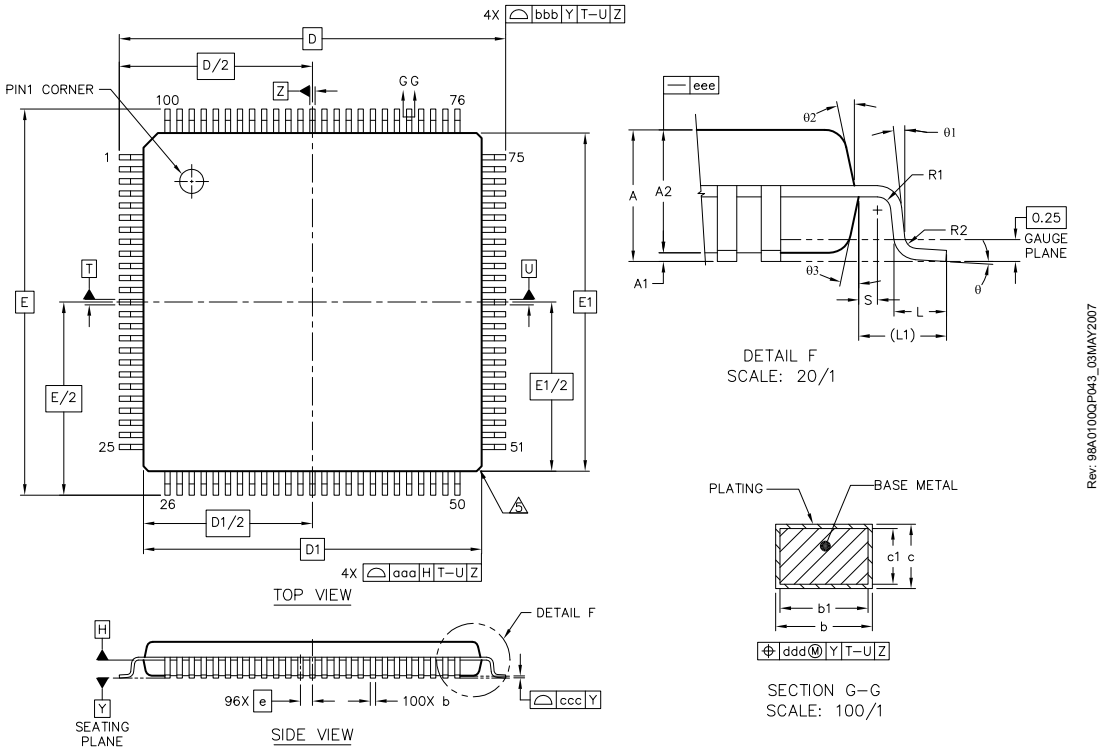

Figure 9.1. LQFP100

Note:

1. Datum 'T', 'U' and 'Z' to be determined at datum plane 'H'
2. Datum 'D' and 'E' to be determined at seating plane datum 'Y'.
3. Dimension 'D1' and 'E1' do not include mold protrusions. Allowable protrusion is 0.25 per side. Dimensions 'D1' and 'E1' do include mold mismatch and are determined at datum plane datum 'H'.
4. Dimension 'b' does not include dambar protrusion. Allowable dambar protrusion shall not cause the lead width to exceed the maximum 'b' dimension by more than 0.08 mm. Dambar can not be located on the lower radius or the foot. Minimum space between protrusion and an adjacent lead is 0.07 mm.
5. Exact shape of each corner is optional.

Table 9.1. LQFP100 (Dimensions in mm)

		SYMBOL	MIN	NOM	MAX
total thickness		A	—	—	1.6
stand off		A1	0.05	—	0.15
mold thickness		A2	1.35	1.4	1.45
lead width (plating)		b	0.17	0.2	0.27
lead width		b1	0.17	—	0.23
L/F thickness (plating)		c	0.09	—	0.2
lead thickness		c1	0.09	—	0.16
	x	D	16 BSC		
	y	E	16 BSC		
body size	x	D1	14 BSC		
	y	E1	14 BSC		
lead pitch		e	0.5 BSC		
		L	0.45	0.6	0.75
footprint		L1	1 REF		
		θ	0º	3.5º	7º
		θ1	0º	—	—
		θ2	11º	12º	13º
		θ3	11º	12º	13º
		R1	0.08	—	—
		R1	0.08	—	0.2
		S	0.2	—	—
package edge tolerance		aaa	0.2		
lead edge tolerance		bbb	0.2		
coplanarity		ccc	0.08		
lead offset		ddd	0.08		
mold flatness		eee	0.05		

9.2 LQFP100 PCB Layout

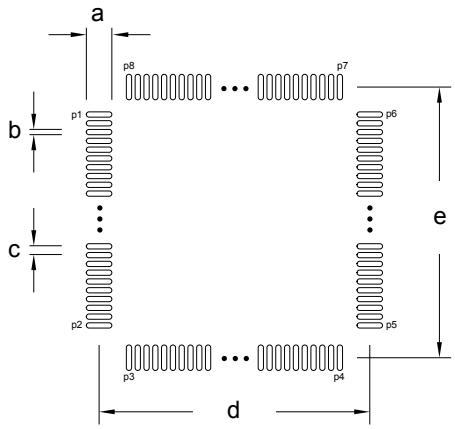

Figure 9.2. LQFP100 PCB Land Pattern

Table 9.2. LQFP100 PCB Land Pattern Dimensions (Dimensions in mm)

Symbol	Dim. (mm)	Symbol	Pin Number	Symbol	Pin Number
a	1.45	P1	1	P6	75
b	0.30	P2	25	P7	76
c	0.50	P3	26	P8	100
d	15.40	P4	50		
e	15.40	P5	51		

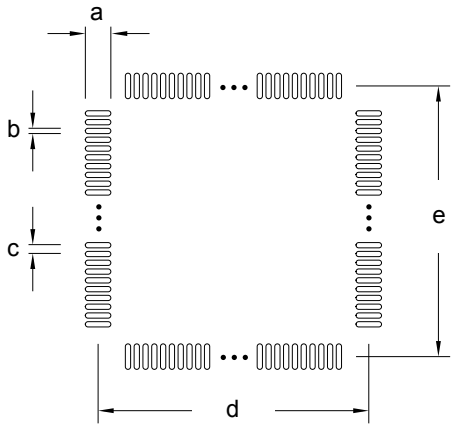

Figure 9.3. LQFP100 PCB Solder Mask

Table 9.3. LQFP100 PCB Solder Mask Dimensions (Dimensions in mm)

Symbol	Dim. (mm)
a	1.57
b	0.42
c	0.50
d	15.40
e	15.40

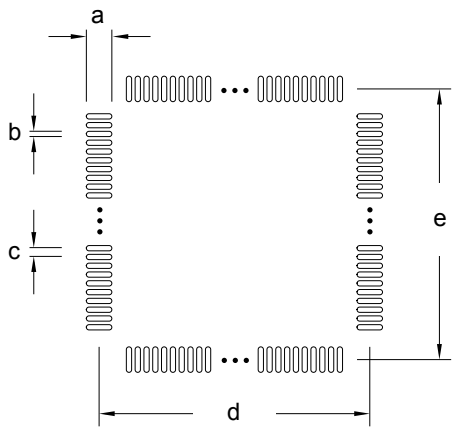

Figure 9.4. LQFP100 PCB Stencil Design

Table 9.4. LQFP100 PCB Stencil Design Dimensions (Dimensions in mm)

Symbol	Dim. (mm)
a	1.35
b	0.20
c	0.50
d	15.40
e	15.40

Note:

1. The drawings are not to scale.
2. All dimensions are in millimeters.
3. All drawings are subject to change without notice.
4. The PCB Land Pattern drawing is in compliance with IPC-7351B.
5. Stencil thickness 0.125 mm.
6. For detailed pin-positioning, see Pin Definitions.

9.3 LQFP100 Package Marking

In the illustration below package fields and position are shown.

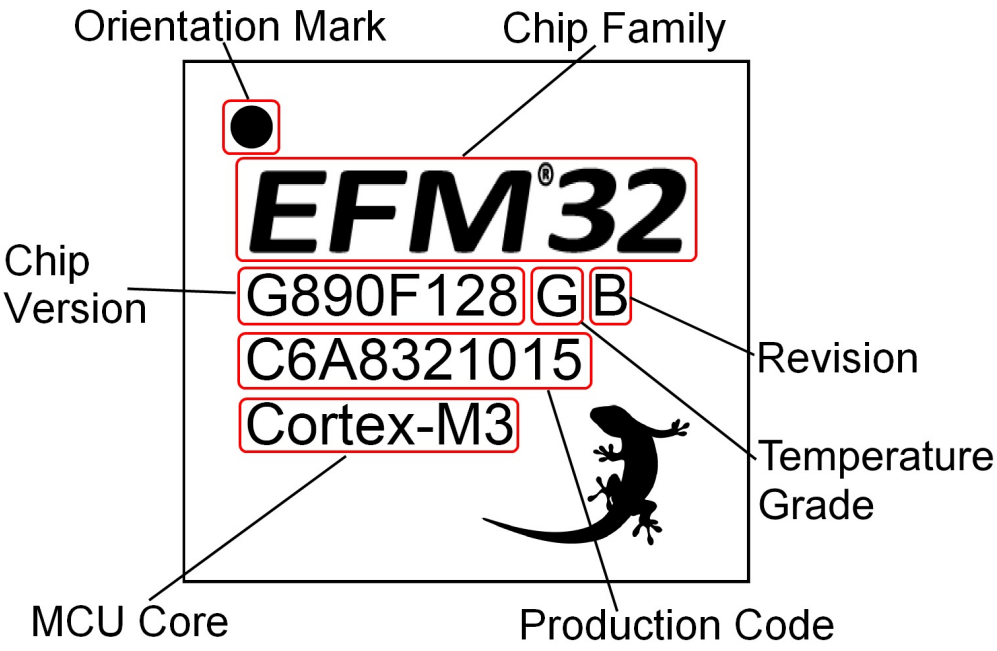

Figure 9.5. Example Chip Marking (Top View)

10. TQFP64 Package Specifications

10.1 TQFP64 Package Dimensions

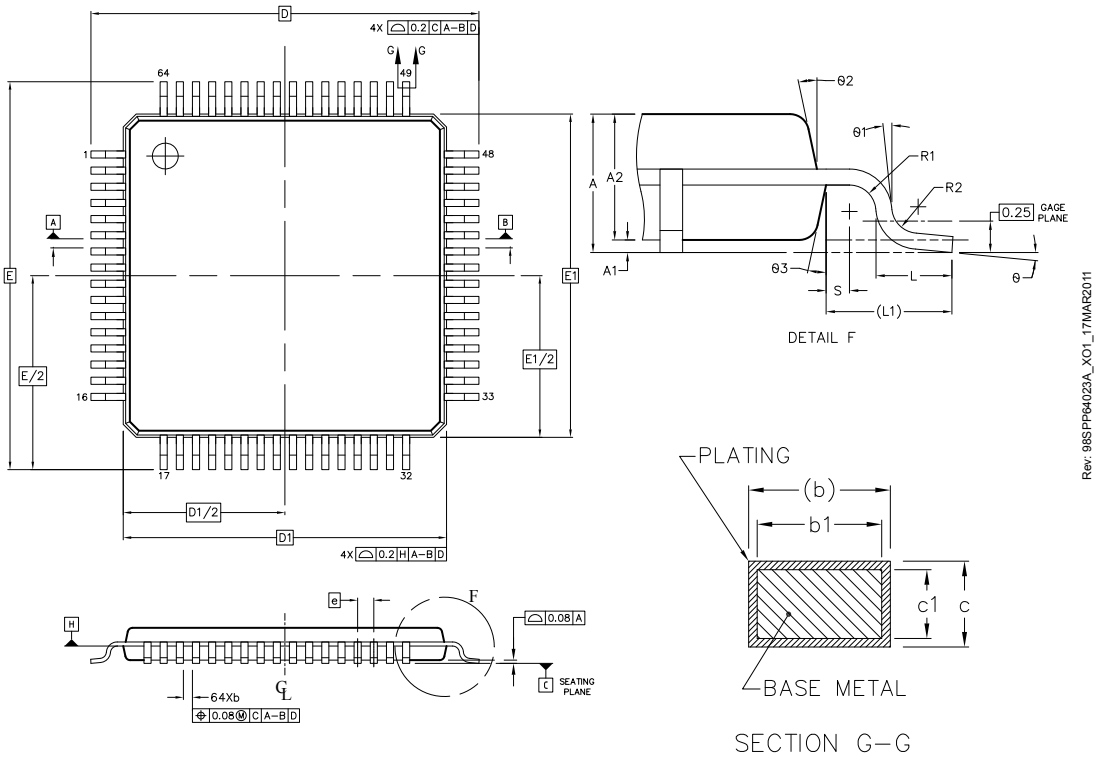

Figure 10.1. TQFP64

Note:

1. All dimensions & tolerancing confirm to ASME Y14.5M-1994.
2. The top package body size may be smaller than the bottom package body size.
3. Datum 'A,B', and 'B' to be determined at datum plane 'H'.
4. To be determined at seating place 'C'.
5. Dimension 'D1' and 'E1' do not include mold protrusions. Allowable protrusion is 0.25mm per side. 'D1' and 'E1' are maximum plastic body size dimension including mold mismatch. Dimension 'D1' and 'E1' shall be determined at datum plane 'H'.
6. Detail of Pin 1 indicatifier are option all but must be located within the zone indicated.
7. Dimension 'b' does not include dambar protrusion. Allowable dambar protrusion shall not cause the lead width to exceed the maximum 'b' dimension by more than 0.08 mm. Dambar can not be located on the lower radius or the foot. Minimum space between protrusion and an adjacent lead is 0.07 mm.
8. Exact shape of each corner is optional.
9. These dimension apply to the flat section of the lead between 0.10 mm and 0.25 mm from the lead tip.
10. All dimensions are in millimeters.

Table 10.1. QFP64 (Dimensions in mm)

DIM	MIN	NOM	MAX	DIM	MIN	NOM	MAX
A	—	1.10	1.20	L1		—	
A1	0.05	—	0.15	R1	0.08	—	—
A2	0.95	1.00	1.05	R2	0.08	—	0.20
b	0.17	0.22	0.27	S	0.20	—	—
b1	0.17	0.20	0.23	θ	0°	3.5°	7°
c	0.09	—	0.20	θ1	0°	—	—
C1	0.09	—	0.16	θ2	11°	12°	13°
D		12.0 BSC		θ3	11°	12°	13°
D1		10.0 BSC					
e		0.50 BSC					
E		12.0 BSC					
E1		10.0 BSC					
L	0.45	0.60	0.75				

10.2 TQFP64 PCB Layout

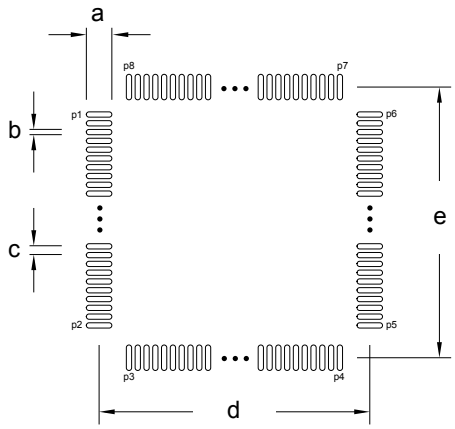

Figure 10.2. TQFP64 PCB Land Pattern

Table 10.2. TQFP64 PCB Land Pattern Dimensions (Dimensions in mm)

Symbol	Dim. (mm)	Symbol	Pin Number	Symbol	Pin Number
a	1.60	P1	1	P6	48
b	0.30	P2	16	P7	49
c	0.50	P3	17	P8	64
d	11.50	P4	32		
e	11.50	P5	33		

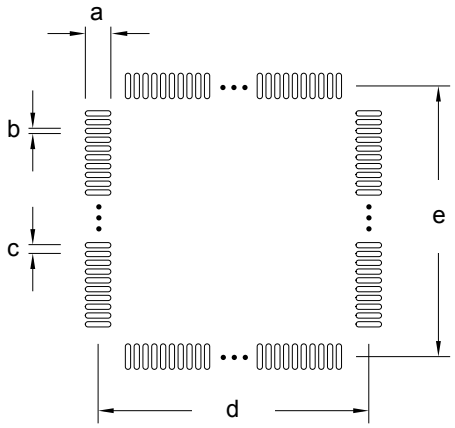

Figure 10.3. TQFP64 PCB Solder Mask

Table 10.3. TQFP64 PCB Solder Mask Dimensions (Dimensions in mm)

Symbol	Dim. (mm)
a	1.72
b	0.42
c	0.50
d	11.50
e	11.50

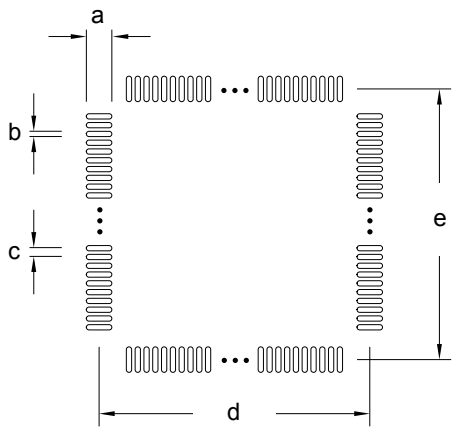

Figure 10.4. TQFP64 PCB Stencil Design

Table 10.4. TQFP64 PCB Stencil Design Dimensions (Dimensions in mm)

Symbol	Dim. (mm)
a	1.50
b	0.20
c	0.50
d	11.50
e	11.50

Note:

1. The drawings are not to scale.
2. All dimensions are in millimeters.
3. All drawings are subject to change without notice.
4. The PCB Land Pattern drawing is in compliance with IPC-7351B.
5. Stencil thickness 0.125 mm.
6. For detailed pin-positioning, see Pin Definitions.

10.3 TQFP64 Package Marking

In the illustration below package fields and position are shown.

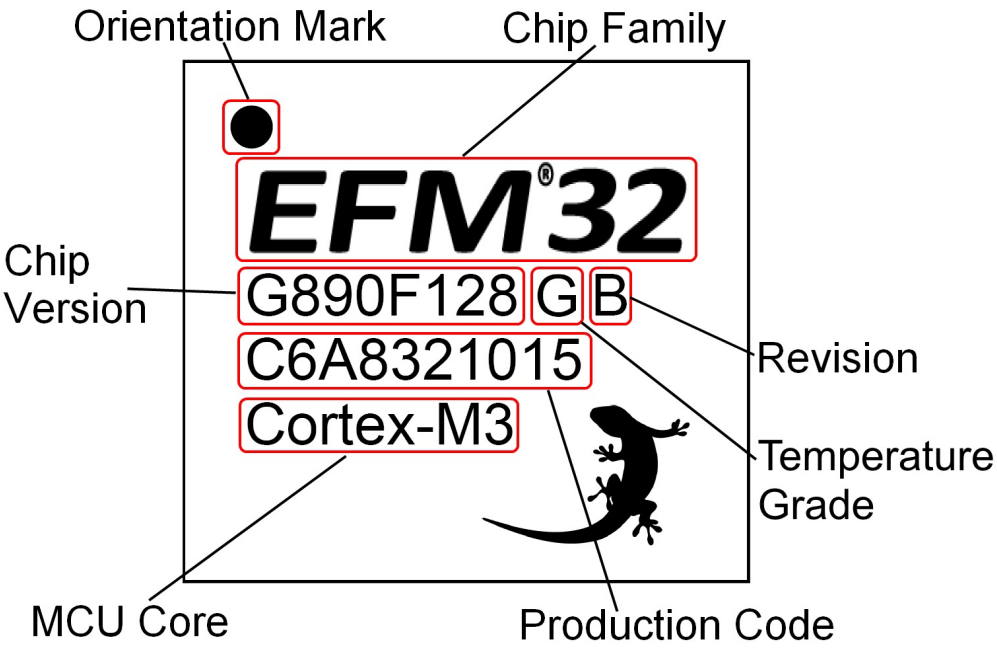

Figure 10.5. Example Chip Marking (Top View)

11. QFN64 Package Specifications

11.1 QFN64 Package Dimensions

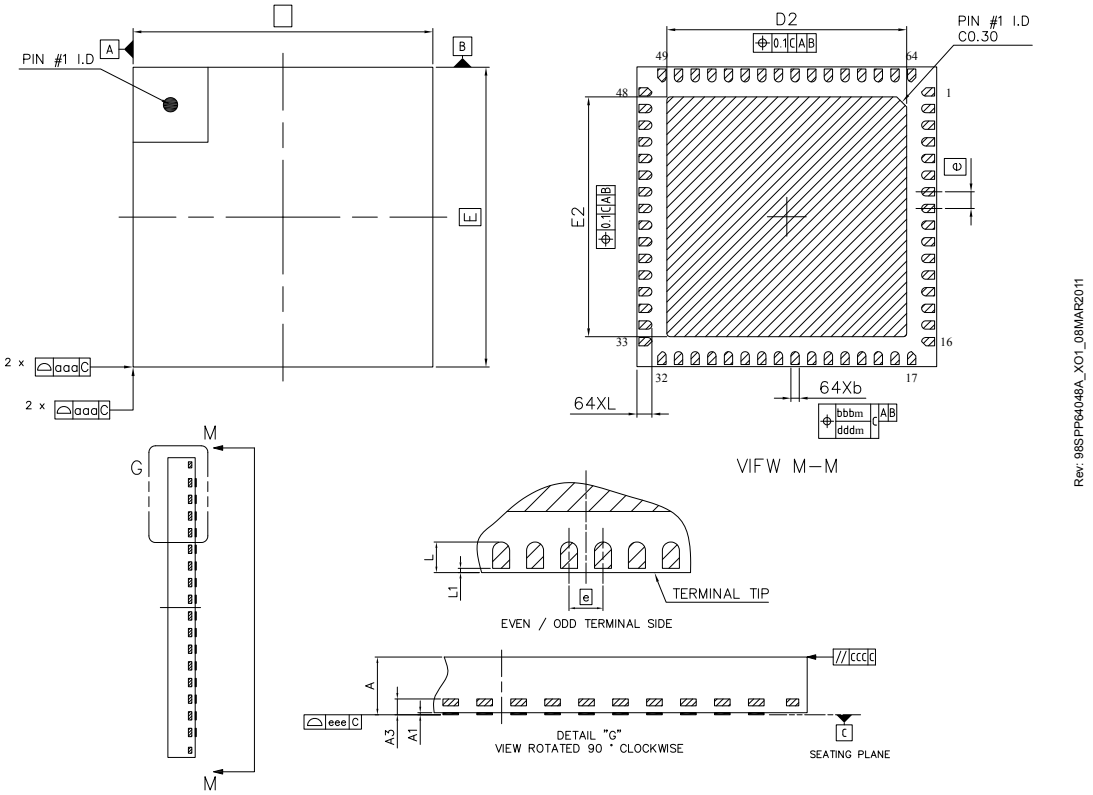

Figure 11.1. QFN64

Note:

1. Dimensioning & tolerancing confirm to ASME Y14.5M-1994.
2. All dimensions are in millimeters. Angles are in degrees.
3. Dimension 'b' applies to metallized terminal and is measured between 0.25 mm and 0.30 mm from the terminal tip. Dimension L1 represents terminal full back from package edge up to 0.1 mm is acceptable.
4. Coplanarity applies to the exposed heat slug as well as the terminal.
5. Radius on terminal is optional.

Table 11.1. QFN64 (Dimensions in mm)

Symbol	Min	Nom	Max
A	0.80	0.85	0.90
A1	0.00	—	0.05
A3	0.203 REF		
b	0.20	0.25	0.30
D	9.00 BSC		
E	9.00 BSC		
D2	7.10	7.20	7.30
E2	7.10	7.20	7.30
e	0.50 BSC		
L	0.40	0.45	0.50
L1	0.00	—	0.10
aaa	0.10		
bbb	0.10		
ccc	0.10		
ddd	0.05		
eee	0.08		

11.2 QFN64 PCB Layout

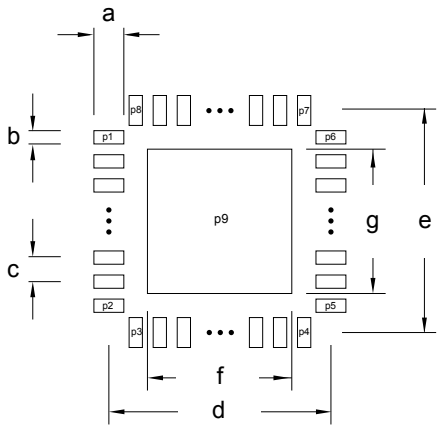

Figure 11.2. QFN64 PCB Land Pattern

Table 11.2. QFN64 PCB Land Pattern Dimensions (Dimensions in mm)

Symbol	Dim. (mm)	Symbol	Pin Number	Symbol	Pin Number
a	0.85	P1	1	P8	64
b	0.30	P2	16	P9	0
c	0.50	P3	17		
d	8.90	P4	32		
e	8.90	P5	33		
f	7.20	P6	48		
g	7.20	P7	49		

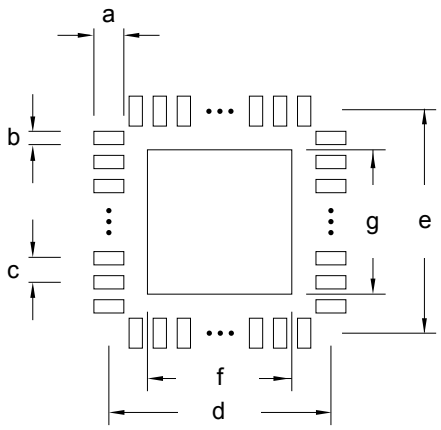

Figure 11.3. QFN64 PCB Solder Mask

Table 11.3. QFN64 PCB Solder Mask Dimensions (Dimensions in mm)

Symbol	Dim. (mm)	Symbol	Dim. (mm)
a	0.97	e	8.90
b	0.42	f	7.32
c	0.50	g	7.32

Symbol	Dim. (mm)	Symbol	Dim. (mm)
d	8.90	-	-

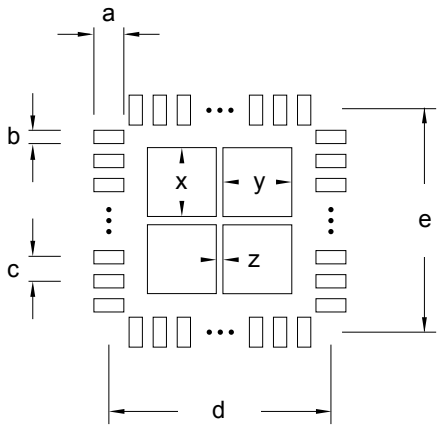

Figure 11.4. QFN64 PCB Stencil Design

Table 11.4. QFN64 PCB Stencil Design Dimensions (Dimensions in mm)

Symbol	Dim. (mm)	Symbol	Dim. (mm)
a	0.75	e	8.90
b	0.22	x	2.70
c	0.50	y	2.70
d	8.90	z	0.80

Note:

1. The drawings are not to scale.
2. All dimensions are in millimeters.
3. All drawings are subject to change without notice.
4. The PCB Land Pattern drawing is in compliance with IPC-7351B.
5. Stencil thickness 0.125 mm.
6. For detailed pin-positioning, see Pin Definitions.

11.3 QFN64 Package Marking

In the illustration below package fields and position are shown.

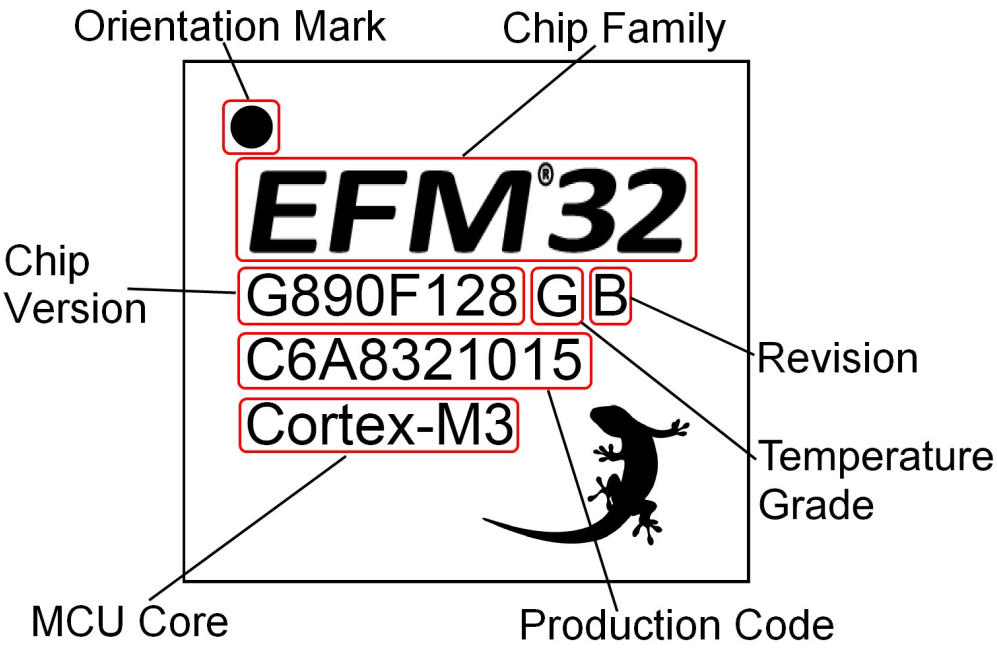

Figure 11.5. Example Chip Marking (Top View)

12. Wafer Specifications

12.1 Bonding Instructions

All pads should be bonded out, with the exception of the pads labeled “NC” and listed as “Do not connect” in Padout. Gold bond wires are recommended for these devices.

All three voltage regulator output decouple pads (DEC_0, DEC_1, DEC_2) must be bonded out and electrically connected on the PCB. In the packaged devices, these three pads are all bonded to a single DECOUPLE pin.

If the USB feature of EFM32WG900 will be used, all of the USB pads must be bonded out, and

- both USB_VREGO_0 and USB_VREGO_1 must be bonded out and electrically connected on the PCB. In the packaged devices, these two pads are both bonded to a single USB_VREGO pin.
- both USB_VREGI_0 and USB_VREGI_1 must be bonded out and electrically connected on the PCB. In the packaged devices, these two pads are both bonded to a single USB_VREGI pin.

12.2 Wafer Description

Table 12.1. Wafer and Die Information

Parameter	Value
Device Family	EFM32WG
Wafer Diameter	8 in
Die Dimensions (Outer edge of seal ring)	Contact sales for information
Wafer Thickness (No backgrind)	725 µm ±15 µm (28.54 mil ±1 mil)
Wafer Identification	Notch
Scribe Street Width	80 µm × 160 µm
Die Per Wafer[1]	Contact sales for information
Passivation	Standard
Wafer Packaging Detail	Wafer Jar
Bond Pad Dimensions	65 µm (parallel to die edge) × 66 µm
Bond Pad Pitch Minimum	76 µm
Maximum Processing Temperature	250°C
Electronic Die Map Format	.txt

Note:

1. This is the Expected Known Good Die yielded per wafer and represents the batch order quantity (one wafer).

12.2.1 Environmental

Bare silicon die are susceptible to mechanical damage and may be sensitive to light. When bare die must be used in an environment exposed to light, it may be necessary to cover the top and sides with an opaque material.

For additional quality and environmental information, see: http://www.silabs.com/support/quality/pages/default.aspx.

12.3 Wafer Storage Guidelines

It is necessary to conform to appropriate wafer storage practices to avoid product degradation or contamination.

- Wafers may be stored for up to 18 months in the original packaging supplied by Silicon Labs.
- Wafers must be stored at a temperature of 18 - 24 °C.
- Wafers must be stored in a humidity-controlled environment with a relative humidity of <30%.
- Wafers should be stored in a clean, dry, inert atmosphere (e.g. nitrogen or clean, dry air).

12.4 Failure Analysis (FA) Guidelines

Certain conditions must be met for Silicon Laboratories to perform Failure Analysis on devices sold in wafer form.

- In order to conduct failure analysis on a device in a customer-provided package, Silicon Laboratories must be provided with die assembled in an industry standard package that is pin compatible with existing packages Silicon Laboratories offers for the device. Initial response time for FA requests that meet these requirements will follow the standard FA guidelines for packaged parts.
- If retest of the entire wafer is requested, Silicon Laboratories must be provided with the whole wafer. Silicon Laboratories cannot retest any wafers that have been sawed, diced, backgrind or are on tape. Initial response time for FA requests that meet these requirements will be three weeks.

13. Chip Revision, Solder Information, Errata

13.1 Chip Revision

The revision of a chip can be determined from the "Revision" field in the package marking.

13.2 Soldering Information

The latest IPC/JEDEC J-STD-020 recommendations for Pb-Free reflow soldering should be followed.

13.3 Errata

See the errata document for description and resolution of device errata. This document is available in Simplicity Studio and online at: http://www.silabs.com/support/pages/document-library.aspx?p=MCUs--32-bit

14. Revision History

Revision 2.44

April, 2025

- Updated 2. Ordering Information by adding a note "Not Recommended for New Design (NRND)".

Revision 2.43

May, 2024

- Updated 2. Ordering Information to note OPNs that are End of Life (EOL).
- Corrected typo " Deat Time Insertion Channel" to " Dead Time Insertion Channel" throughout.

Revision 2.42

November, 2022

- Updated 2. Ordering Information to note OPNs that are not recommended for new designs.

Revision 2.41

December, 2021

- Fixed name change throughout to "Gecko Family".
- Updated terminology according to Silicon Labs' Inclusive Lexicon Project.

Revision 2.40

November, 2021

- Changed 2. Ordering Information to reflect tape and reel packaging.
- Replaced throughout document previous "Wonder Gecko" name with "Wireless Gecko" or "WG" device family name to reflect new naming convention.

Revision 2.30

May, 2021

- Updated 2. Ordering Information identifying CSP81 OPNs as End of Life (EOL).

Revision 2.20

November, 2019

- Updated Ordering Information for the release of revision B devices.
- In Table 4.15 Analog Digital Converter (ADC) on page 91 Electrical Specifications – Updated ADC input ON resistance (R_{ADCIN}).
- Updated the load resistance (R_{LOAD}) in Operational Amplifier (OPAMP) specifications.
- In Alternate Functionality Overview tables:
  - Restored DAC0_P0, DAC0_P1, DAC0_N0 and DAC0_N1 alternate functionalities for all the devices.
  - Reordered the OPAMP functionality and respective pinout in alphabetical order.
- Removed PB11 as the 1st alternate location of I2C1_SDA in Alternate Functionality Overview tables for:
  - EFM32WG232
  - EFM32WG332
  - EFM32WG842
  - EFM32WG942
- In Device Pinout/Device Padout tables, restored Alternate Funtionality/Description of pin names USB_VREGI and USB_VREGO.
- Pad #117 changed from PD15 to PB15 in Device Padout table for the EFM32WG900.
- Statements regarding packaging materials have been removed. The most current device quality and environmental information can be found at http://www.silabs.com/support/quality/pages/default.aspx.

Revision 2.10

November, 2018

- 2. Ordering Information – Corrected QFN, QFP, and BGA ordering code errors introduced in datasheet v2.00. Corrected ordering code decoder.
- Table 3.6 EFM32WG330 Configuration Summary on page 28 - Corrected number of GPIOs.
- Table 3.18 EFM32WG940 Configuration Summary on page 52 - Corrected number of GPIOs.
- Corrected available ACMP0 and ACMP1 channels in the following Configuration Summary sections:
  - 3.2.6 EFM32WG330
  - 3.2.7 EFM32WG332
  - 3.2.9 EFM32WG380
  - 3.2.10 EFM32WG390
  - 3.2.12 EFM32WG840
  - 3.2.13 EFM32WG842
  - 3.2.18 EFM32WG940
  - 3.2.19 EFM32WG942
  - 3.2.20 EFM32WG980
  - 3.2.21 EFM32WG990
- Added 4.4 Backup Supply Domain.
- 4.8 Flash - Updated page erase time and device erase time and added footnotes.
- 11.2 QFN64 PCB Layout - Corrected pin number for symbol P9.

Revision 2.00

July, 2018

- Consolidated all EFM32WG data sheets:
  - EFM32WG230
  - EFM32WG232
  - EFM32WG280
  - EFM32WG290
  - EFM32WG295
  - EFM32WG330
  - EFM32WG332
  - EFM32WG360
  - EFM32WG380
  - EFM32WG390
  - EFM32WG395
  - EFM32WG840
  - EFM32WG842
  - EFM32WG880
  - EFM32WG890
  - EFM32WG895
  - EFM32WG900
  - EFM32WG940
  - EFM32WG942
  - EFM32WG980
  - EFM32WG990
  - EFM32WG995
- Added a Feature List section.
- 2. Ordering Information – Added ordering code decoder.
- 3.3 Memory Map – Separated the Memory Map into two figures – one for core and code space listing and one for peripheral listing.
- 4.2 Absolute Maximum Ratings – Updated preface. Removed the footnote about storage temperature and added max source/sink current per I/O pin.
- Environmental – Removed this section. Environmental specifications are available in the qualification report.
- 4.5 Current Consumption – Updated typical and added maximum current specifications for the highest energy mode, I_{EM0}.
- 4.8 Flash – Added word write cycles between erase (WWC_{FLASH}) specification.
- 4.9 General Purpose Input Output – Reduced maximum input leakage current (I_{IOLEAK}, max).
- 4.10.2 HFXO – Replaced “energyAware Designer” with “Configurator tool”.
- 4.10.3 LFRCO – Added (min, typ, max) specifications for oscillation frequency over full power supply and full temperature range. Also added typical voltage drift and temperature drift specs.
- 4.10.3 LFRCO – Updated graphs for calibrated LFRCO Frequency vs. Temperature and Supply Range, and also fixed y-axis unit [kHz].
- 4.10.4 HFRCO – Added specifications for oscillation frequency over full power supply and temperature range, added typical voltage drift and temperature drift specs at each frequency band, and removed the duty cycle spec (DC_{HFRCO}).
- 4.10.4 HFRCO – Updated all HFRCO graphs (various frequency bands).
- 4.10.5 AUXHFRCO – Updated test conditions for oscillation frequency.
- 4.10.5 AUXHFRCO – Removed the duty cycle spec for AUXHFRCO ($DC_{AUXHFRCO}$).

- 4.11 Analog Digital Converter (ADC) – Added footnote for average active current, updated conditions for INL and DNL. Added the following specs:
  - Input bias current ($I_{ADCBIASIN}$) – added max (source and sink).
  - Input offset current ($I_{ADCOFFSETIN}$) – added max (source and sink).
  - VREF output voltage (V_{REF}) – added min, typ, max.
  - VREF voltage drift (V_{REF_VDRIFT}) – added min, typ, max.
  - VREF temperature drift (V_{REF_TDRIFT}) – added min, typ, max.
  - VREF current consumption (I_{VREF}) – added typ, max, replacing I_{ADCREF}.
  - ADC and DAC VREF matching (V_{REF_MATCH}) – added typical.
- 4.12 Digital Analog Converter (DAC) – Updated parameter description, test conditions, and footnote for average current (I_{DAC}), and added the following new VREF specs at each voltage reference:
  - VREF output voltage (V_{REF}) – added min, typ, max.
  - VREF voltage drift (V_{REF_VDRIFT}) – added min, typ, max.
  - VREF temperature drift (V_{REF_TDRIFT}) – added min, typ, max.
  - VREF current consumption (I_{VREF}) – added typ, max.
  - ADC and DAC VREF matching (V_{REF_MATCH}) – added typical.
- 4.13 Operational Amplifier (OPAMP) – Removed note specifying that OPAMP specs stem from simulations, and added new specifications for the following:
  - Active Current (I_{OPAMP}) – new specifications at various (new) bias program settings.
  - Gain Bandwidth Product (GBW_{OPAMP}) – new (typ) specifications at new bias program settings and DC bias settings, and added footnotes.
  - Input Offset Voltage (V_{OFFSET}) – specified min, typ, max for Op Amps (OPA0-1).
  - Input Bias Current ($I_{OPAMPBIASIN}$) – new min and max specifications.
  - Input Offset Current ($I_{OPAMPOFF\text{-}SETIN}$) – new min and max specifications.
  - Slew Rate (SR_{OPAMP}) – new specifications at new bias program settings.
- 4.14 Analog Comparator (ACMP) – Added new specifications for the following:
  - Input Bias Current ($I_{ACMPBIASIN}$) – added min and max.
  - Input Offset Current ($I_{ACMPOFFSETIN}$) – added min and max.
  - Active Current (I_{ACMP}) – added two new condition settings and footnote.
  - Negative Response Time ($t_{RESPONSE_N}$) – added new specifications.
  - Positive Response Times ($t_{RESPONSE_P}$) – added new specifications.
  - Offset Voltage ($V_{ACMPOFFSET}$) – added specifications at new bias program settings.
  - ACMP Hysteresis ($V_{ACMPHYST}$) – added specifications for negative and positive hysteresis at various bias program settings.
  - VDD SCALED Input Accuracy ($V_{VDDSCALED}$) – added new specifications (typical).
- 4.15 Voltage Comparator (VCMP)– Added the following new specifications:
  - Footnote for active current, I_{VCMP}.
  - Negative hysteresis ($V_{VCMPHYST_N}$), replacing VCMP hysteresis.
  - Positive hysteresis ($V_{VCMPHYST_P}$), replacing VCMP hysteresis.
  - Hysteresis Delta ($V_{VCMPHYST_DELTA}$).
  - Negative Response Time ($t_{RESPONSE_N}$).
  - Positive Response Time ($t_{RESPONSE_P}$).
- 4.19 USART SPI – Corrected parameter descriptions for $t_{CS_DIS_MI}$.
- 4.20 Digital Peripherals – Added (typical) LE Peripheral Interface Clock Current (I_{LFCLK}) specifications with both the LFXO-LFA and LFXO-LFB clock trees.
- Removed MSL information (Moisture Sensitivity Level). Instead, MSL information can be found in the Qual report that is available on the Silicon Labs website.
- 6.1 BGA112 Package Dimensions – Removed statements regarding materials used.
- 7.1 BGA120 Package Dimensions – Removed statements regarding materials used.
- New formatting throughout.

Revision 1.40

June 13th, 2014

- This revision applies the following devices:
  - EFM32WG230
  - EFM32WG232
  - EFM32WG280
  - EFM32WG290
  - EFM32WG295
  - EFM32WG330
  - EFM32WG332
  - EFM32WG380
  - EFM32WG390
  - EFM32WG395
  - EFM32WG840
  - EFM32WG842
  - EFM32WG880
  - EFM32WG890
  - EFM32WG895
  - EFM32WG940
  - EFM32WG942
  - EFM32WG980
  - EFM32WG990
  - EFM32WG995
- Removed "Preliminary" markings.
- Corrected single power supply voltage minimum value from 1.85V to 1.98V.
- Added AUXHFRCO to blockdiagram and electrical characteristics.
- Updated current consumption data.
- Updated transition between energy modes data.
- Updated power management data.
- Updated GPIO data.
- Updated LFRCO, HFRCO and ULFRCO data.
- For devices with ADC, updated ADC data.
- For devices with DAC, updated DAC data.
- For devicse with OPAMP, updated OPAMP data.
- For devices with ACMP, updated ACMP data.
- For devices with VCMP, updated VCMP data.
- For devices with EBI, added EBI timing chapter.

Revision 1.31

November 21st, 2013

- This revision applies the following devices:
  - EFM32WG230
  - EFM32WG232
  - EFM32WG280
  - EFM32WG290
  - EFM32WG295
  - EFM32WG330
  - EFM32WG332
  - EFM32WG380
  - EFM32WG390
  - EFM32WG395
  - EFM32WG840
  - EFM32WG842
  - EFM32WG880
  - EFM32WG890
  - EFM32WG895
  - EFM32WG940
  - EFM32WG942
  - EFM32WG980
  - EFM32WG990
  - EFM32WG995
- Updated errata-link.
- Updated chip marking.
- Added link to Environmental and Quality information.
- For devices with DAC, re-added missing DAC-data.

Revision 1.30

September 30th, 2013

- This revision applies the following devices:
  - EFM32WG230
  - EFM32WG232
  - EFM32WG280
  - EFM32WG290
  - EFM32WG295
  - EFM32WG330
  - EFM32WG332
  - EFM32WG380
  - EFM32WG390
  - EFM32WG395
  - EFM32WG840
  - EFM32WG842
  - EFM32WG880
  - EFM32WG890
  - EFM32WG895
  - EFM32WG940
  - EFM32WG942
  - EFM32WG980
  - EFM32WG990
  - EFM32WG995
- Added I2C characterization data.
- Added SPI characterization data.
- Corrected the DAC and OPAMP2 pin sharing information in the Alternate Functionality Pinout section.
- For devices with USB, added the USB bootloader information.
- Corrected the ADC resolution from 12, 10 and 6 bit to 12, 8 and 6 bit.
- Updated the EM0 and EM1 current consumption numbers. Updated the the EM1 plots and removed the EM0 plots.
- For QFN64 packages, removed UART mentioned incorrectly in the QFN64 parts.
- Updated Environmental information.
- Updated trademark, disclaimer and contact information.
- Other minor corrections.

Revision 1.20

June 28th, 2013

- This revision applies the following devices:
  - EFM32WG230
  - EFM32WG232
  - EFM32WG280
  - EFM32WG290
  - EFM32WG295
  - EFM32WG330
  - EFM32WG332
  - EFM32WG380
  - EFM32WG390
  - EFM32WG395
  - EFM32WG840
  - EFM32WG842
  - EFM32WG880
  - EFM32WG890
  - EFM32WG895
  - EFM32WG940
  - EFM32WG942
  - EFM32WG980
  - EFM32WG990
  - EFM32WG995
- For BGA120 packages, corrected pinout top view figure.
- For all BGA pacakges, updated PCB Land Pattern, PCB Solder Mask and PCB Stencil Design figures.
- Updated power requirements in the Power Management section.
- Removed minimum load capacitance figure and table. Added reference to application note.
- Other minor corrections.

March 16th, 2015

- This revision applies the following devices:
  - EFM32WG900
- Corrected pad numbers and the order of the pads in the padout table so that it matches the drawing.

Revision 1.10

May 6th, 2013

- This revision applies the following devices:
  - EFM32WG230
  - EFM32WG232
  - EFM32WG280
  - EFM32WG290
  - EFM32WG295
  - EFM32WG330
  - EFM32WG332
  - EFM32WG380
  - EFM32WG390
  - EFM32WG395
  - EFM32WG840
  - EFM32WG842
  - EFM32WG880
  - EFM32WG890
  - EFM32WG895
  - EFM32WG940
  - EFM32WG942
  - EFM32WG980
  - EFM32WG990
  - EFM32WG995
- Updated current consumption table and figures in Electrical characteristics section.
- Other minor corrections.

December 12th, 2014

- This revision applies the following devices:
  - EFM32WG900
- Added recommendation to use gold bond wire.

Revision 1.00

September 11th, 2012

- This revision applies the following devices:
  - EFM32WG230
  - EFM32WG232
  - EFM32WG280
  - EFM32WG290
  - EFM32WG295
  - EFM32WG330
  - EFM32WG332
  - EFM32WG380
  - EFM32WG390
  - EFM32WG395
  - EFM32WG840
  - EFM32WG842
  - EFM32WG880
  - EFM32WG890
  - EFM32WG895
  - EFM32WG940
  - EFM32WG942
  - EFM32WG980
  - EFM32WG990
  - EFM32WG995
- Updated the HFRCO 1 MHz band typical value to 1.2 MHz.
- Updated the HFRCO 7 MHz band typical value to 6.6 MHz.
- For BGA112 and BGA120 packages, corrected BGA solder balls material from Sn96.5/Ag3/Cu0.5 to SAC105.

October 15th, 2014

- This revision applies the following devices:
  - EFM32WG360
  - EFM32WG900
- Initial release.

Revision 0.95

May 3rd, 2012

- This revision applies the following devices:
  - EFM32WG230
  - EFM32WG232
  - EFM32WG280
  - EFM32WG290
  - EFM32WG295
  - EFM32WG330
  - EFM32WG332
  - EFM32WG380
  - EFM32WG390
  - EFM32WG395
  - EFM32WG840
  - EFM32WG842
  - EFM32WG880
  - EFM32WG890
  - EFM32WG895
  - EFM32WG940
  - EFM32WG942
  - EFM32WG980
  - EFM32WG990
  - EFM32WG995
- Updated EM2/EM3 current consumption at 85°C.

Revision 0.90

February 27th, 2012

- This revision applies the following devices:
  - EFM32WG230
  - EFM32WG232
  - EFM32WG280
  - EFM32WG290
  - EFM32WG295
  - EFM32WG330
  - EFM32WG332
  - EFM32WG380
  - EFM32WG390
  - EFM32WG395
  - EFM32WG840
  - EFM32WG842
  - EFM32WG880
  - EFM32WG890
  - EFM32WG895
  - EFM32WG940
  - EFM32WG942
  - EFM32WG980
  - EFM32WG990
  - EFM32WG995
- Initial preliminary release.

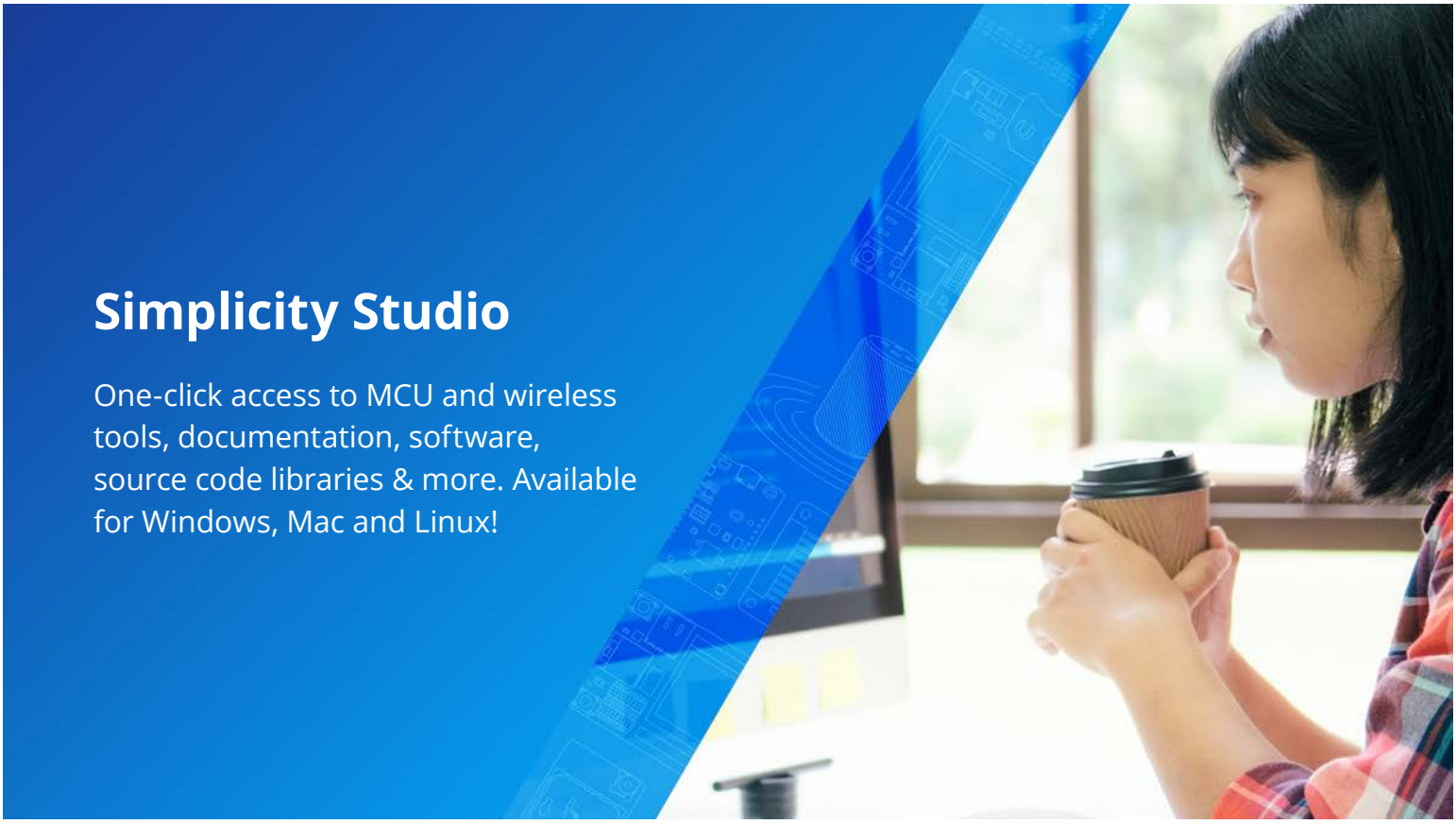

Simplicity Studio

One-click access to MCU and wireless tools, documentation, software, source code libraries & more. Available for Windows, Mac and Linux!

IoT Portfolio
www.silabs.com/IoT

SW/HW
www.silabs.com/simplicity

Quality
www.silabs.com/quality

Support & Community
www.silabs.com/community

Disclaimer
Silicon Labs intends to provide customers with the latest, accurate, and in-depth documentation of all peripherals and modules available for system and software implementers using or intending to use the Silicon Labs products. Characterization data, available modules and peripherals, memory sizes and memory addresses refer to each specific device, and "Typical" parameters provided can and do vary in different applications. Application examples described herein are for illustrative purposes only. Silicon Labs reserves the right to make changes without further notice to the product information, specifications, and descriptions herein, and does not give warranties as to the accuracy or completeness of the included information. Without prior notification, Silicon Labs may update product firmware during the manufacturing process for security or reliability reasons. Such changes will not alter the specifications or the performance of the product. Silicon Labs shall have no liability for the consequences of use of the information supplied in this document. This document does not imply or expressly grant any license to design or fabricate any integrated circuits. The products are not designed or authorized to be used within any FDA Class III devices, applications for which FDA premarket approval is required or Life Support Systems without the specific written consent of Silicon Labs. A "Life Support System" is any product or system intended to support or sustain life and/or health, which, if it fails, can be reasonably expected to result in significant personal injury or death. Silicon Labs products are not designed or authorized for military applications. Silicon Labs products shall under no circumstances be used in weapons of mass destruction including (but not limited to) nuclear, biological or chemical weapons, or missiles capable of delivering such weapons. Silicon Labs disclaims all express and implied warranties and shall not be responsible or liable for any injuries or damages related to use of a Silicon Labs product in such unauthorized applications.

Trademark Information
Silicon Laboratories Inc.®, Silicon Laboratories®, Silicon Labs®, SiLabs® and the Silicon Labs logo®, Bluegiga®, Bluegiga Logo®, EFM®, EFM32®, EFR, Ember®, Energy Micro, Energy Micro logo and combinations thereof, "the world's most energy friendly microcontrollers", Redpine Signals®, WiSeConnect , n-Link, EZLink®, EZRadio®, EZRadioPRO®, Gecko®, Gecko OS, Gecko OS Studio, Precision32®, Simplicity Studio®, Telegesis, the Telegesis Logo®, USBXpress® , Zentri, the Zentri logo and Zentri DMS, Z-Wave®, and others are trademarks or registered trademarks of Silicon Labs. ARM, CORTEX, Cortex-M3 and THUMB are trademarks or registered trademarks of ARM Holdings. Keil is a registered trademark of ARM Limited. Wi-Fi is a registered trademark of the Wi-Fi Alliance. All other products or brand names mentioned herein are trademarks of their respective holders.

SILICON LABS

Silicon Laboratories Inc.
400 West Cesar Chavez
Austin, TX 78701
USA

www.silabs.com