IFX1050GVIO

High Speed CAN-Transceiver

Data Sheet

Rev. 1.0, 2011-04-08

Standard Power

Table of Contents

1 Overview 3
2 Pin Configuration 4
3 Block Diagram 5
4 Electrical Characteristics 6
4.1 Operating Range 6
5 Diagrams 11
6 Application Information 13
7 Package Outlines 17
8 Revision History 18

1 Overview

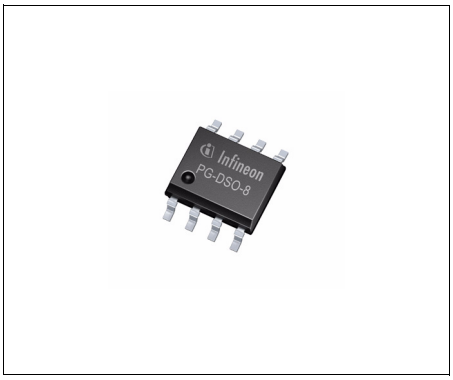

PG-DSO-8

Features

- CAN data transmission rate up to 1 MBaud
- Stand-by Mode
- Suitable for 12 V and 24 V applications
- Excellent EMC performance (very high immunity and very low emission)
- Bus pins are short circuit proof to ground and battery voltage
- Versions for 5V and 3.3V microcontrollers
- Overtemperature protection
- Green Product (RoHS compliant)

Description

The HS CAN-transceiver IFX1050GVIO is optimized for high speed differential mode data transmission in industrial applications and is compatible to ISO/DIS 11898. It works as an interface between the CAN protocol controller and the physical differential bus in both, 12 V and 24 V systems.

The IFX1050GVIO is designed to withstand the conditions of industrial applications and provides excellent EMC performance.

IFX1050GVIO

3.3 V logic I/O version (logic I/O voltage adaptive to V_{33} pin within the range 3.3 V to 5 V):

RxD, TxD, INH. One control pin (INH) and two operation modes: Normal Mode and Standby Mode.

Type	Package	Marking
IFX1050GVIO	PG-DSO-8	1050IO

2 Pin Configuration

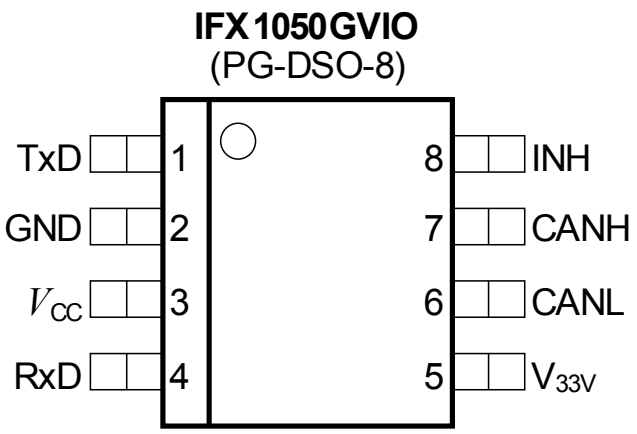

Figure 1 Pin Configuration IFX1050GVIO (top view)

Table 1 Pin Definitions and Functions IFX1050GVIO

Pin No.	Symbol	Function
1	TxD	**CAN transmit data input**; 20 kΩ pull-up, LOW in dominant state
2	GND	**Ground**
3	V_{CC}	**5 V Supply input**
4	RxD	**CAN receive data output;** LOW in dominant state, integrated pull-up
5	V_{33V}	**Logic supply input; 3.3V or 5V** microcontroller logic supply can be connected here! The digital I/Os of the IFX1050GVIO adopt to the connected microcontroller logic supply a V_{33V}
6	CANL	**Low line I/O;** LOW in dominant state
7	CANH	**High line I/O;** HIGH in dominant state
8	INH	**Inhibit Input;** control input, 20 kΩ pull, set LOW for normal mode

3 Block Diagram

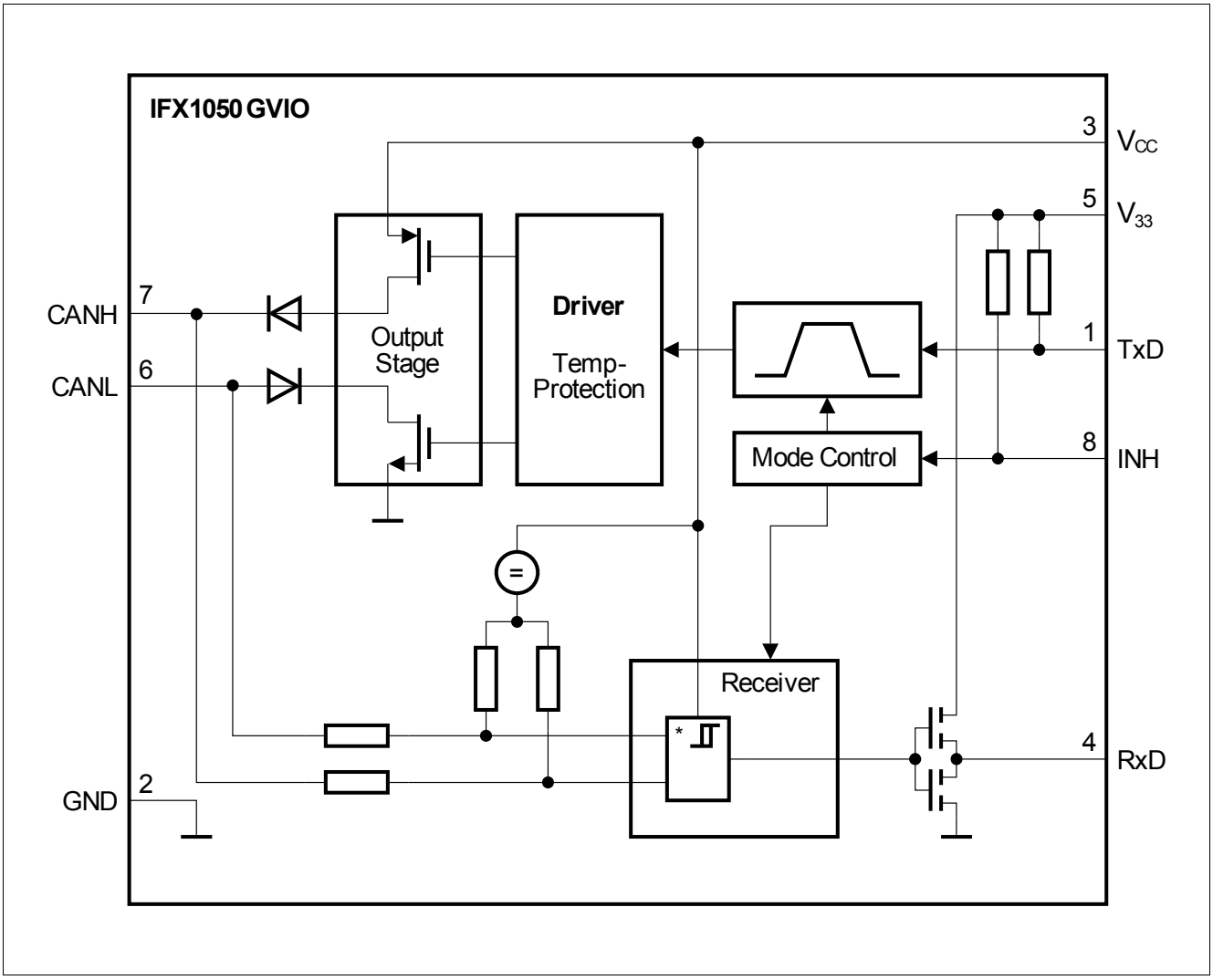

Figure 2 **Block Diagram IFX1050GVIO**

4 Electrical Characteristics

Table 2 Absolute Maximum Ratings

Parameter	Symbol	Limit Values		Unit	Remarks
		Min.	Max.		
Voltages					
Supply voltage	V_{CC}	-0.3	6.5	V	–
3.3V supply	V_{33V}	-0.3	6.5	V	–
CAN input voltage (CANH, CANL)	$V_{CANH/L}$	-40	40	V	–
Logic voltages at INH, RM, TxD, RxD	V_I	-0.3	V_{CC}	V	0 V < V_{CC} < 5.5 V
Electrostatic discharge voltage at CANH, CANL	V_{ESD}	-6	6	kV	human body model (100 pF via 1.5 kΩ)
Electrostatic discharge voltage	V_{ESD}	-2	2	kV	human body model (100 pF via 1.5 kΩ)
Temperatures					
Junction temperature	T_j	-40	150	°C	–

Note: Maximum ratings are absolute ratings; exceeding any one of these values may cause irreversible damage to the integrated circuit.

4.1 Operating Range

Table 3 Operating Range

Parameter	Symbol	Limit Values		Unit	Remarks
		Min.	Max.		
Supply voltage	V_{CC}	4.5	5.5	V	–
3.3V supply voltage	V_{33V}	3.0	5.5	V	–
Junction temperature	T_j	-40	125	°C	–
Thermal Resistances					
Junction ambient	R_{thj-a}	–	185	K/W	–
Thermal Shutdown (junction temperature)					
Thermal shutdown temperature	T_{jsD}	160	200	°C	10 °C hysteresis

Table 4 Electrical Characteristics

4.5 V < V_{CC} < 5.5 V; 3.0 V < V_{33V} < 5.5 V R_L = 60 Ω; V_{INH} < $V_{INH,ON}$; -40 °C < T_j < 125 °C; all voltages with respect to ground; positive current flowing into pin; unless otherwise specified.

Parameter	Symbol	Limit Values			Unit	Remarks
		Min.	Typ.	Max.		
Current Consumption						
Current consumption	I_{CC+33V}	–	6	10	mA	recessive state; V_{TxD} = V_{33V}
Current consumption	I_{CC+33V}	–	45	70	mA	dominant state; V_{TxD} = 0 V
Current consumption	I_{33V}	–	–	2	mA	–
Current consumption	$I_{CC+33V,stb}$	–	1	10	µA	stand-by mode; TxD = high
Receiver Output RxD						
HIGH level output current	$I_{RD,H}$	–	-2	-1	mA	V_{RD} = 0.8 × V_{33V}, V_{diff} < 0.4 V[1)]
LOW level output current	$I_{RD,L}$	1	2	–	mA	V_{RD} = 0.2 × V_{33V}, V_{diff} > 1 V[1)]
Transmission Input TxD						
HIGH level input voltage threshold	$V_{TD,H}$	–	0.55 × V_{33V}	0.7 × V_{33V}	V	recessive state
LOW level input voltage threshold	$V_{TD,L}$	0.3 × V_{33V}	0.45 × V_{33V}	–	V	dominant state
TxD pull-up resistance	R_{TD}	10	25	50	kΩ	–
Inhibit Input (pin INH)						
HIGH level input voltage threshold	$V_{INH,H}$	–	0.55 × V_{33V}	0.7 × V_{33V}	V	stand-by mode;
LOW level input voltage threshold	$V_{INH,L}$	0.3 × V_{33V}	0.45 × V_{33V}	–	V	normal mode
INH pull-up resistance	R_{INH}	10	25	50	kΩ	–

Table 4 Electrical Characteristics (cont'd)

4.5 V < V_{CC} < 5.5 V; 3.0 V < V_{33V} < 5.5 V R_L = 60 Ω; V_{INH} < $V_{INH,ON}$; -40 °C < T_j < 125 °C; all voltages with respect to ground; positive current flowing into pin; unless otherwise specified.

Parameter	Symbol	Limit Values			Unit	Remarks
		Min.	Typ.	Max.		
Bus Receiver						
Differential receiver threshold voltage, recessive to dominant edge	$V_{diff,d}$	–	0.75	0.90	V	-20 V < (V_{CANH}, V_{CANL}) < 25 V V_{diff} = V_{CANH} - V_{CANL}
Differential receiver threshold voltage dominant to recessive edge	$V_{diff,r}$	0.50	0.60	–	V	-20 V < (V_{CANH}, V_{CANL}) < 25 V V_{diff} = V_{CANH} - V_{CANL}
Common Mode Range	CMR	-20	–	25	V	V_{CC} = 5 V
Differential receiver hysteresis	$V_{diff,hys}$	–	150	–	mV	–
CANH, CANL input resistance	R_i	10	20	30	kΩ	recessive state
Differential input resistance	R_{diff}	20	40	60	kΩ	recessive state

Table 4 Electrical Characteristics (cont'd)

4.5 V < V_{CC} < 5.5 V; 3.0 V < V_{33V} < 5.5 V R_L = 60 Ω; V_{INH} < $V_{INH,ON}$; -40 °C < T_j < 125 °C; all voltages with respect to ground; positive current flowing into pin; unless otherwise specified.

Parameter	Symbol	Limit Values			Unit	Remarks
		Min.	Typ.	Max.		
Bus Transmitter						
CANL/CANH recessive output voltage	$V_{CANL/H}$	0.4 × V_{CC}	–	0.6 × V_{CC}	V	V_{TxD} = V_{33V}
CANH, CANL recessive output voltage difference V_{diff} = V_{CANH} - V_{CANL}, no load[2)]	V_{diff}	-1	–	0.05	V	V_{TxD} = V_{33V}
CANL dominant output voltage	V_{CANL}	–	–	2.0	V	V_{TxD} = 0 V; V_{CC} = 5 V
CANH dominant output voltage	V_{CANH}	2.8	–	–	V	V_{TxD} = 0 V; V_{CC} = 5 V
CANH, CANL dominant output voltage difference V_{diff} = V_{CANH} - V_{CANL}	V_{diff}	1.5	–	3.0	V	V_{TxD} = 0 V; V_{CC} = 5 V
CANL short circuit current	I_{CANLsc}	50	120	200	mA	$V_{CANLshort}$ = 18 V
		–	150	–	mA	$V_{CANLshort}$ = 36 V
CANH short circuit current	I_{CANHsc}	-200	-120	-50	mA	$V_{CANHshort}$ = 0 V
CANH short circuit current	I_{CANHsc}	–	-120	–	mA	$V_{CANHshort}$ = -5 V
Output current	$I_{CANH/L,lk}$	-50	-300	-400	µA	V_{CC} = 0 V, V_{CANH} = V_{CANL} = -7 V
		-50	-100	-150	µA	V_{CC} = 0 V, V_{CANH} = V_{CANL} = -2 V
Output current	$I_{CANH/L,lk}$	50	280	400	µA	V_{CC} = 0 V, V_{CANH} = V_{CANL} = 7 V
		50	100	150	µA	V_{CC} = 0 V, V_{CANH} = V_{CANL} = 2 V

Table 4 Electrical Characteristics (cont'd)

4.5 V < V_{CC} < 5.5 V; 3.0 V < V_{33V} < 5.5 V R_L = 60 Ω; V_{INH} < $V_{INH,ON}$; -40 °C < T_j < 125 °C; all voltages with respect to ground; positive current flowing into pin; unless otherwise specified.

Parameter	Symbol	Limit Values			Unit	Remarks
		Min.	Typ.	Max.		
Dynamic CAN-Transceiver Characteristics						
Propagation delay TxD-to-RxD LOW (recessive to dominant)	$t_{d(L),TR}$	–	150	280	ns	C_L = 47 pF; R_L = 60 Ω; V_{CC} = 5 V; C_{RxD} = 20 pF
Propagation delay TxD-to-RxD HIGH (dominant to recessive)	$t_{d(H),TR}$	–	150	280	ns	C_L = 47 pF; R_L = 60 Ω; V_{CC} = 5 V; C_{RxD} = 20 pF
Propagation delay TxD LOW to bus dominant	$t_{d(L),T}$	–	100	140	ns	C_L = 47 pF; R_L = 60 Ω; V_{CC} = 5 V
Propagation delay TxD HIGH to bus recessive	$t_{d(H),T}$	–	100	140	ns	C_L = 47 pF; R_L = 60 Ω; V_{CC} = 5 V
Propagation delay bus dominant to RxD LOW	$t_{d(L),R}$	–	50	140	ns	C_L = 47 pF; R_L = 60 Ω; V_{CC} = 5 V; C_{RxD} = 20 pF
Propagation delay bus recessive to RxD HIGH	$t_{d(H),R}$	–	50	140	ns	C_L = 47 pF; R_L = 60 Ω; V_{CC} = 5 V; C_{RxD} = 20 pF

1) $V_{diff} = V_{CANH} - V_{CANL}$
2) Deviation from ISO/DIS 11898

5 Diagrams

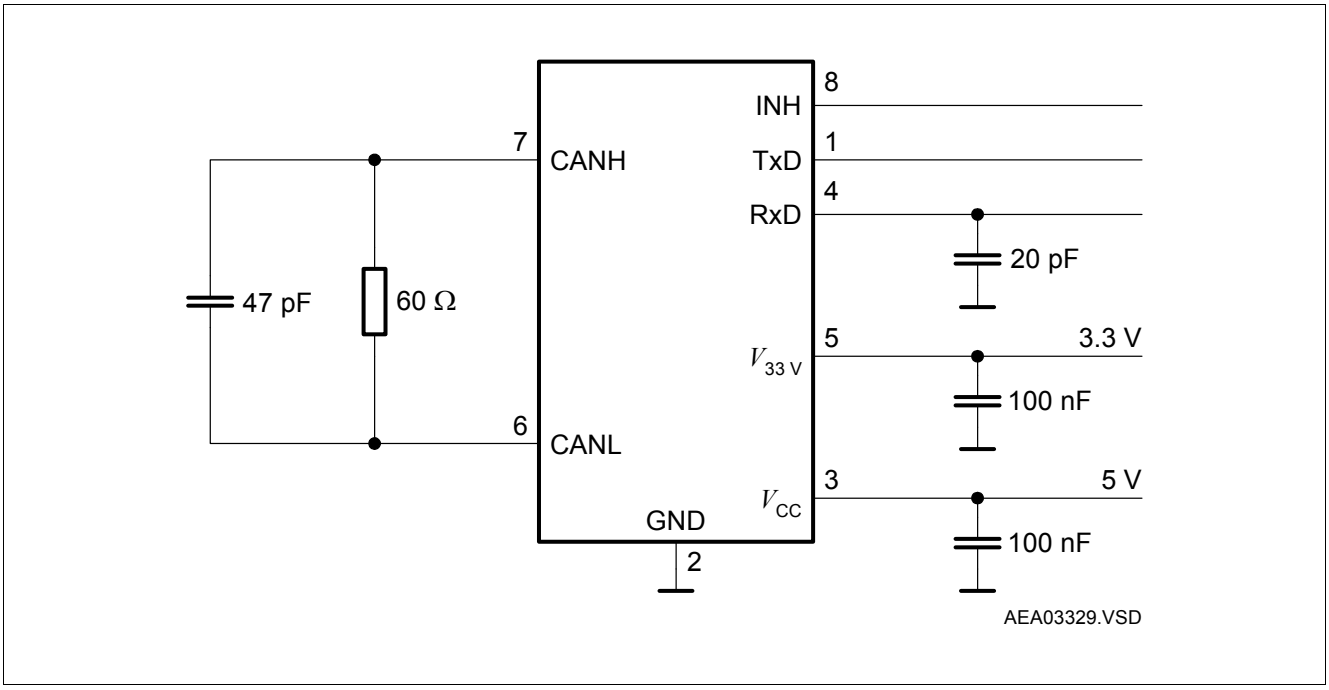

Figure 3 Test Circuit for Dynamic Characteristics

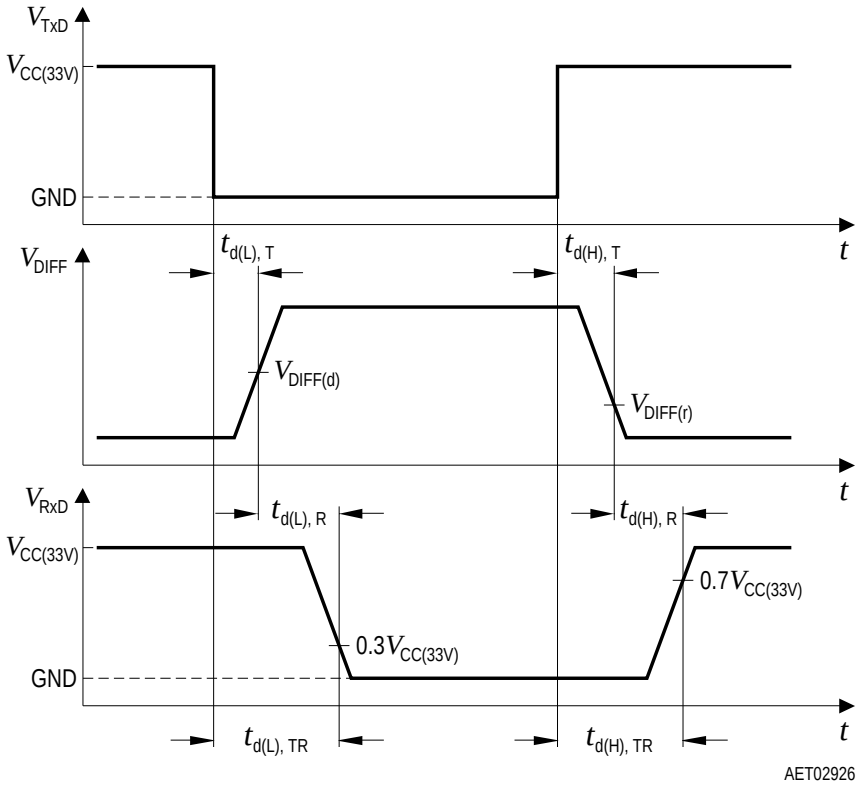

Figure 4 Timing Diagrams for Dynamic Characteristics

6 Application Information

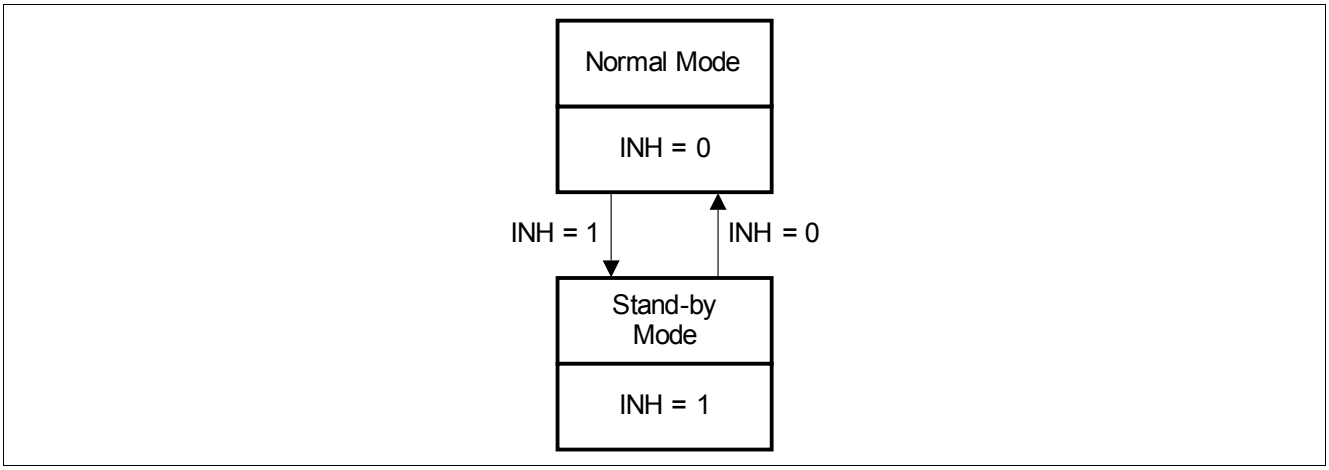

Figure 5 Mode State Diagram

The IFX1050GVIO offers two different operation modes (see **Figure 5**), controlled by the INH pin.

In the normal mode the device is able to receive and to transmit data from the TxD pin to the CAN bus. The stand-by mode is a low power mode that disables both, the receiver as well as the transmitter.

When the stand-by mode is not used the INH pin has to be connected to ground level in order to switch the IFX1050GVIO into normal mode.

Application Information for the 3.3 V Version

The IFX1050GVIO can be used for both; 3.3 V and 5 V microcontroller logic supply, as shown in **Figure 6**. Don't apply any external resistors between the power supply and this pin. This may cause a voltage drop and reduce the available voltage at this pin.

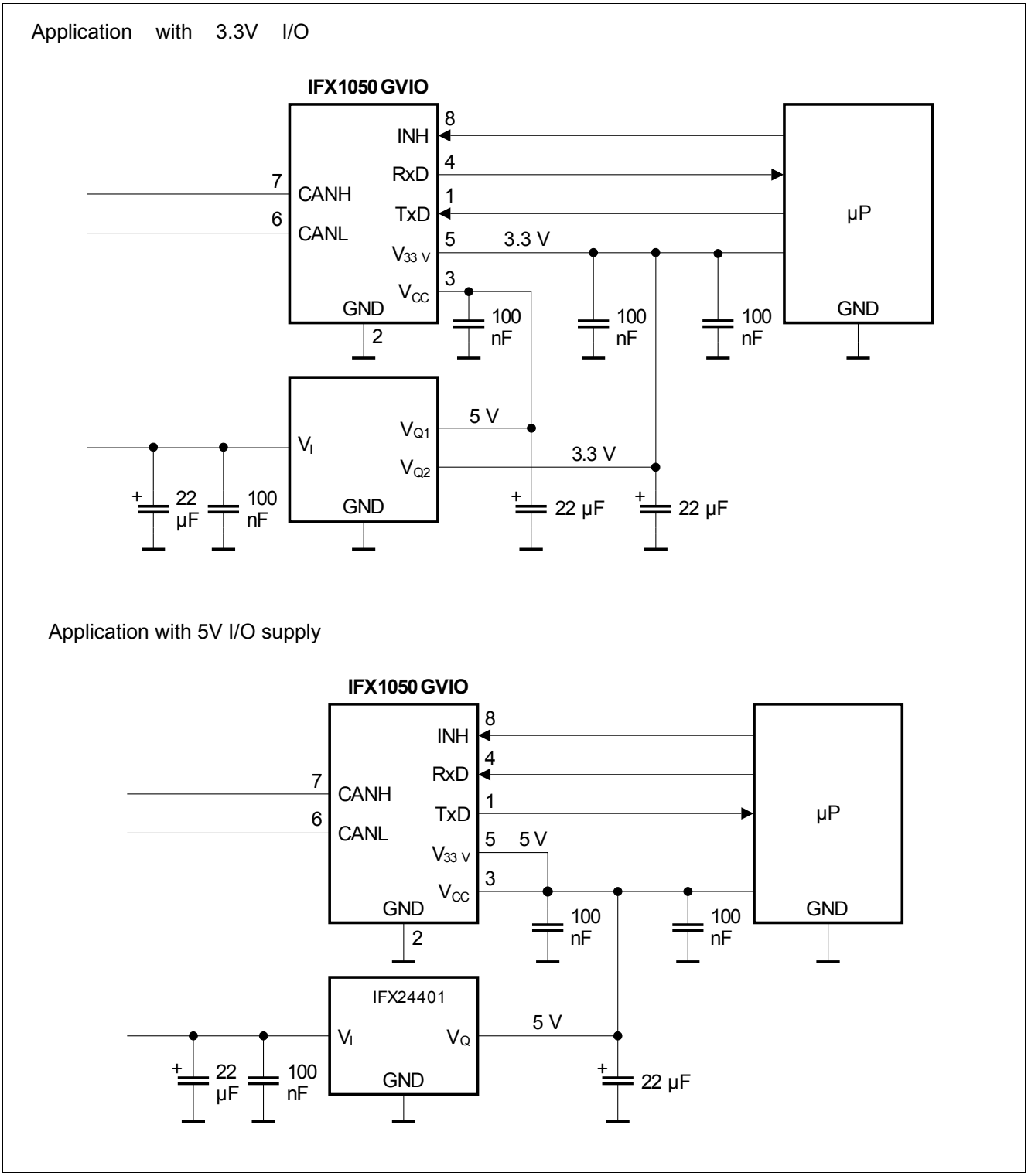

Figure 6 Application Circuit IFX1050GVIO used for 3.3 and 5V Logic

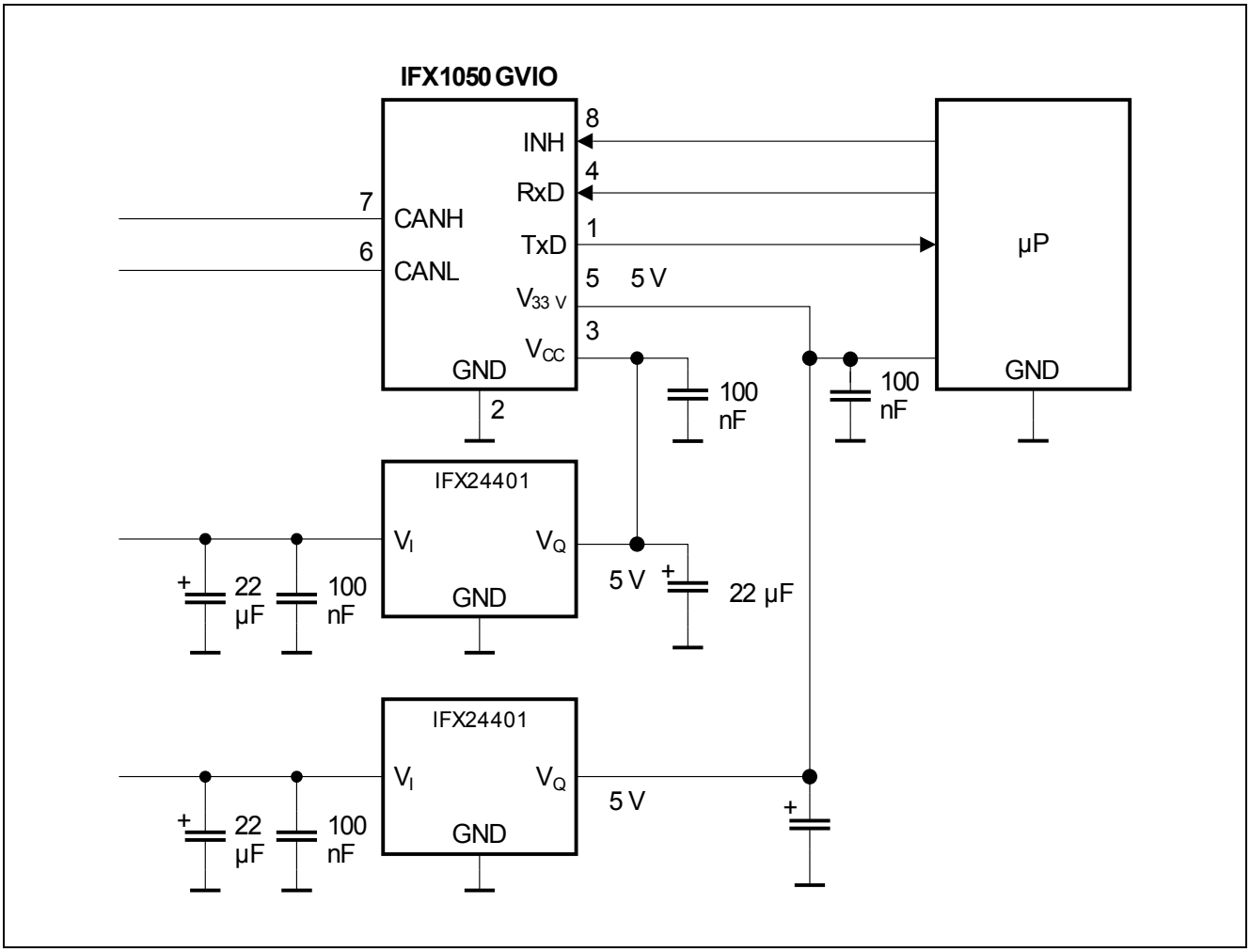

Figure 7 **Figure 4 (cont.)** **Application Circuit IFX1050GVIO used for 3.3 and 5V Logic**

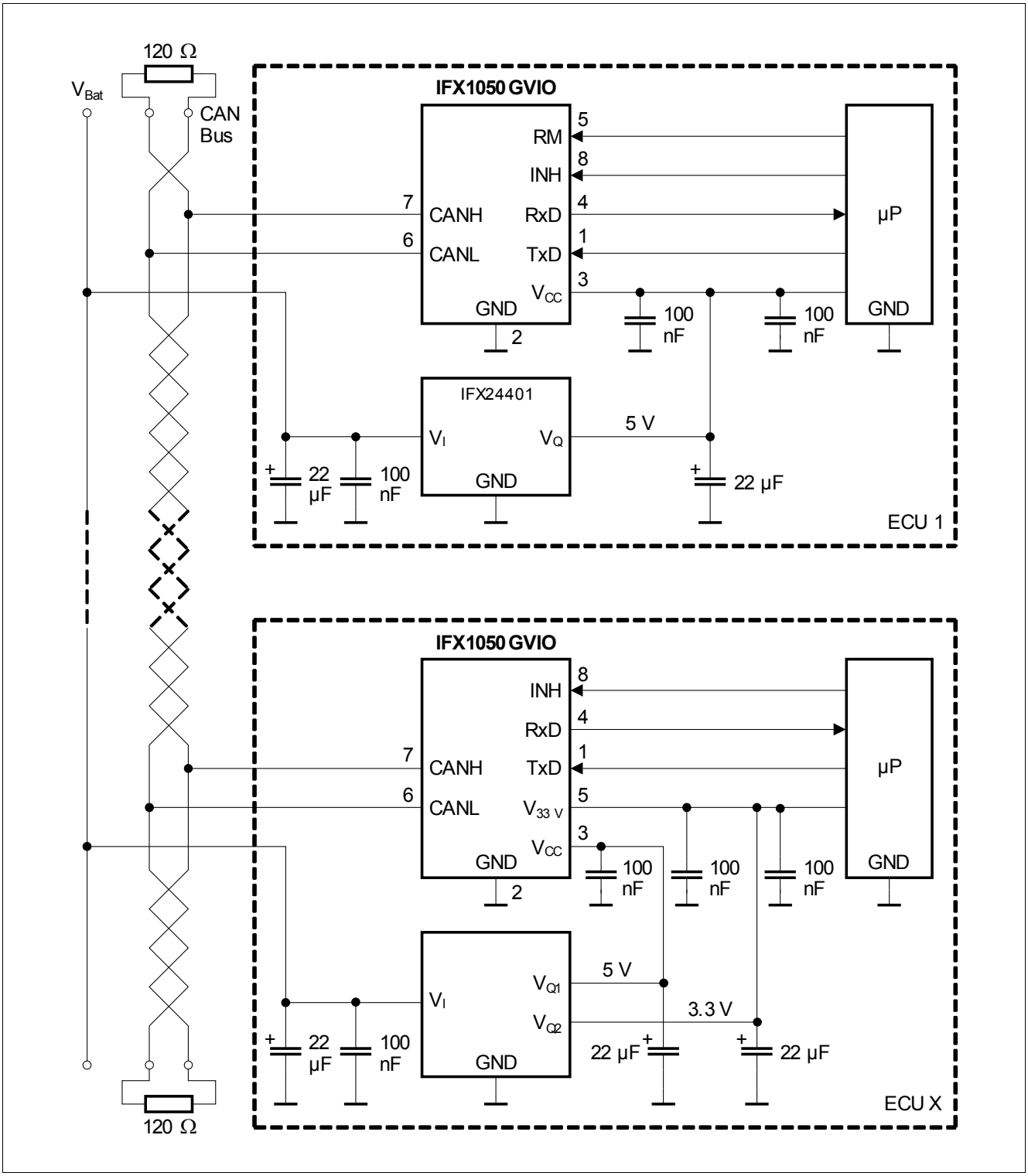

Figure 8 Application Circuit IFX1050GVIO

Applications with separate 5V power supplies,
for applications with switchable transceiver

7 Package Outlines

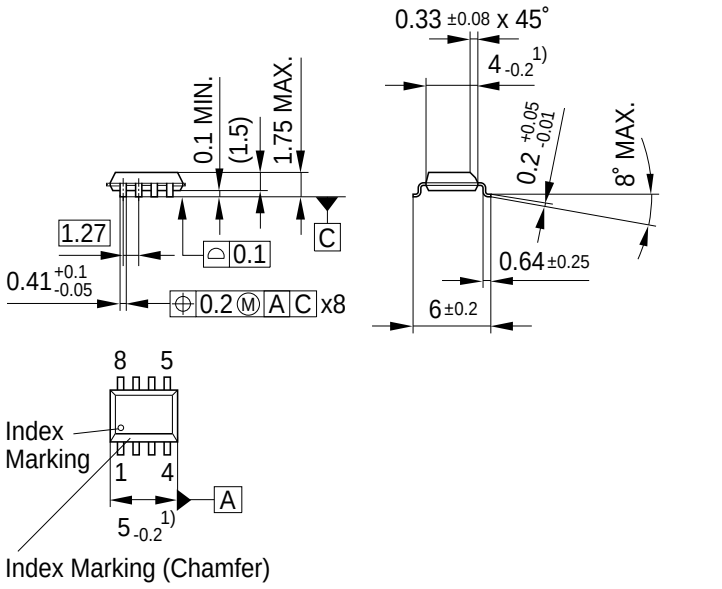

1) Does not include plastic or metal protrusion of 0.15 max. per side

GPS09032

Figure 9 **PG-DSO-8** (Plastic Dual Small Outline), lead free version

Green Product (RoHS compliant)

To meet the world-wide customer requirements for environmentally friendly products and to be compliant with government regulations the device is available as a green product. Green products are RoHS-Compliant (i.e Pb-free finish on leads and suitable for Pb-free soldering according to IPC/JEDEC J-STD-020).

8 Revision History

Revision	Date	Changes
1.0	2011-04-08	Release Datasheet

Edition 2011-04-08

Published by
Infineon Technologies AG
81726 Munich, Germany

© 2011 Infineon Technologies AG
All Rights Reserved.

Legal Disclaimer

The information given in this document shall in no event be regarded as a guarantee of conditions or characteristics. With respect to any examples or hints given herein, any typical values stated herein and/or any information regarding the application of the device, Infineon Technologies hereby disclaims any and all warranties and liabilities of any kind, including without limitation, warranties of non-infringement of intellectual property rights of any third party.

Information

For further information on technology, delivery terms and conditions and prices, please contact the nearest Infineon Technologies Office (**www.infineon.com**).

Warnings

Due to technical requirements, components may contain dangerous substances. For information on the types in question, please contact the nearest Infineon Technologies Office.

The Infineon Technologies component described in this Data Sheet may be used in life-support devices or systems and/or automotive, aviation and aerospace applications or systems only with the express written approval of Infineon Technologies, if a failure of such components can reasonably be expected to cause the failure of that life-support automotive, aviation and aerospace device or system or to affect the safety or effectiveness of that device or system. Life support devices or systems are intended to be implanted in the human body or to support and/or maintain and sustain and/or protect human life. If they fail, it is reasonable to assume that the health of the user or other persons may be endangered.

Mouser Electronics

Authorized Distributor

Click to View Pricing, Inventory, Delivery & Lifecycle Information:

Infineon:

IFX1050G VIO