Dual Bootstrapped, 12 V MOSFET Driver with Output Disable

ADP3120A

The ADP3120A is a single Phase 12 V MOSFET gate drivers optimized to drive the gates of both high−side and low−side power MOSFETs in a synchronous buck converter. The high−side and low−side driver is capable of driving a 3000 pF load with a 45 ns propagation delay and a 25 ns transition time.

With a wide operating voltage range, high or low side MOSFET gate drive voltage can be optimized for the best efficiency. Internal adaptive nonoverlap circuitry further reduces switching losses by preventing simultaneous conduction of both MOSFETs.

The floating top driver design can accommodate VBST voltages as high as 35 V, with transient voltages as high as 40 V. Both gate outputs can be driven low by applying a low logic level to the Output Disable ($\overline{OD}$) pin. An Undervoltage Lockout function ensures that both driver outputs are low when the supply voltage is low, and a Thermal Shutdown function provides the IC with overtemperature protection.

Features

- All−In−One Synchronous Buck Driver
- Bootstrapped High−Side Drive
- One PWM Signal Generates Both Drives
- Anticross Conduction Protection Circuitry
- $\overline{OD}$ for Disabling the Driver Outputs Meets CPU VR Requirement when Used with Patented FlexMode™ Controller
- These are Pb−Free Devices

Applications

- Multiphase Desktop CPU Supplies
- Single−Supply Synchronous Buck Converters

MARKING DIAGRAMS

SO−8
D SUFFIX
CASE 751

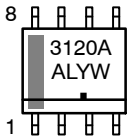

DFN8
MN SUFFIX
CASE 506BJ

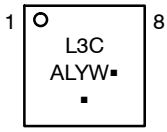

A = Assembly Location
L = Wafer Lot
Y = Year
W = Work Week
▪ = Pb−Free Package

PIN CONNECTIONS

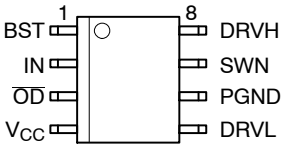

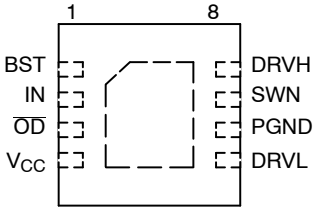

(Top View)

ORDERING INFORMATION

Device	Package	Shipping†
ADP3120AJRZ-RL	SO−8 (Pb−Free)	2500 / Tape & Reel
ADP3120AJCPZ-RL	DFN8 (Pb−Free)	3000 / Tape & Reel

DISCONTINUED (Note 1)

ADP3120AJRZ	SO−8 (Pb−Free)	98 Units / Rail

†For information on tape and reel specifications, including part orientation and tape sizes, please refer to our Tape and Reel Packaging Specification Brochure, BRD8011/D.

1. **DISCONTINUED:** This device is not recommended for new design. Please contact your **onsemi** representative for information. The most current information on this device may be available on www.onsemi.com.

© Semiconductor Components Industries, LLC, 2012

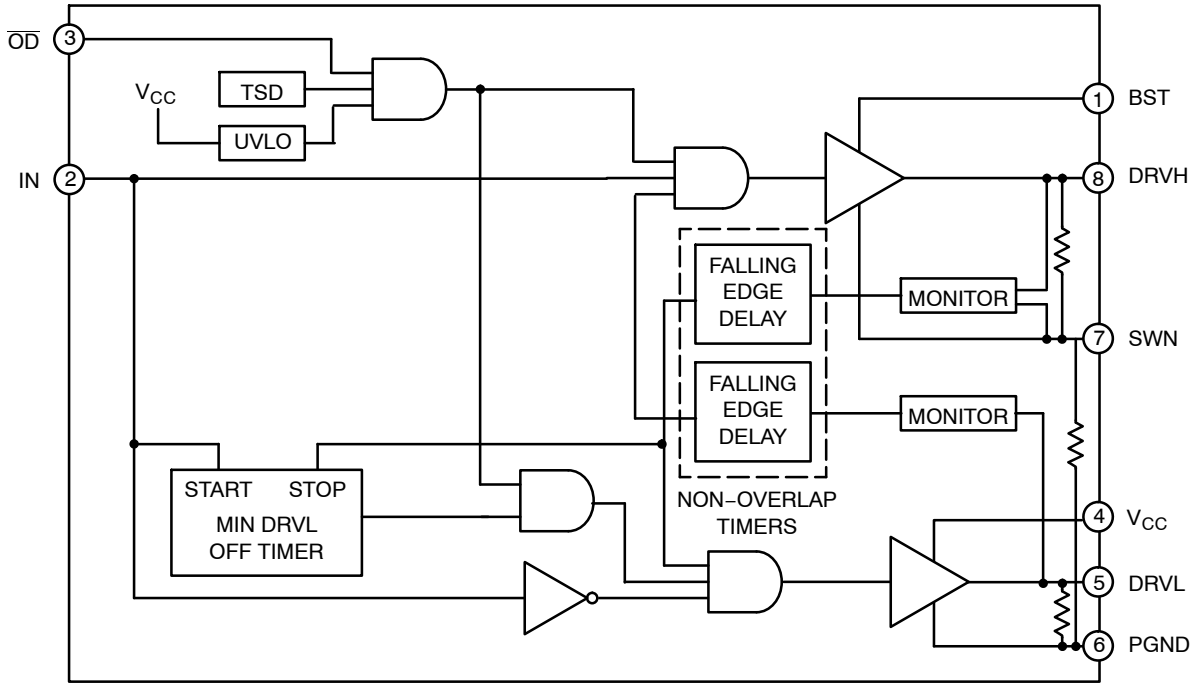

Figure 1. Block Diagram

PIN DESCRIPTION

SO−8	DFN8	Symbol	Description
1	1	BST	Upper MOSFET Floating Bootstrap Supply. A capacitor connected between BST and SW pins holds this bootstrap voltage for the high−side MOSFET as it is switched. The recommended capacitor value is between 100 nF and 1.0 μF. An external diode is required with the ADP3120A.
2	2	IN	Logic−Level Input. This pin has primary control of the drive outputs.
3	3	$\overline{OD}$	Output Disable. When low, normal operation is disabled forcing DRVH and DRVL low.
4	4	V_{CC}	Input Supply. A 1.0 μF ceramic capacitor should be connected from this pin to PGND.
5	5	DRVL	Output drive for the lower MOSFET.
6	6	PGND	Power Ground. Should be closely connected to the source of the lower MOSFET.
7	7	SWN	Switch Node. Connect to the source of the upper MOSFET.
8	8	DRVH	Output drive for the upper MOSFET.

MAXIMUM RATINGS

Rating	Value	Unit
Operating Ambient Temperature, T_A	−20 to 85	°C
Operating Junction Temperature, T_J (Note 1)	−20 to 150	°C
Package Thermal Resistance: SO−8 Junction−to−Case, $R_{\theta JC}$ Junction−to−Ambient, $R_{\theta JA}$ (2−Layer Board) Package Thermal Resistance: DFN8 (Note 2) Junction−to−Case, $R_{\theta JC}$ (From die to exposed pad) Junction−to−Ambient, $R_{\theta JA}$	 45 123 7.5 55	 °C/W °C/W °C/W °C/W
Storage Temperature Range, T_S	−65 to 150	°C
Lead Temperature Soldering (10 sec): Reflow (SMD styles only) Pb−Free (Note 3)	260 peak	°C
JEDEC Moisture Sensitivity Level SO−8 (260 peak profile)	1	–

Stresses exceeding those listed in the Maximum Ratings table may damage the device. If any of these limits are exceeded, device functionality should not be assumed, damage may occur and reliability may be affected.

1. Internally limited by thermal shutdown, 150°C min.
2. 2 layer board, 1 in^2 Cu, 1 oz thickness.
3. 60−180 seconds minimum above 237°C.

NOTE: This device is ESD sensitive. Use standard ESD precautions when handling.

MAXIMUM RATINGS

Pin Symbol	Pin Name	V_{MAX}	V_{MIN}
V_{CC}	Main Supply Voltage Input	15 V	−0.3 V
PGND	Ground	0 V	0 V
BST	Bootstrap Supply Voltage Input	35 V wrt/PGND 40 V < 50 ns wrt/PGND 15 V wrt/SW	−0.3 V wrt/SW
SW	Switching Node (Bootstrap Supply Return)	35 V 40 V < 50 ns	−5.0 V −10 V < 200 ns
DRVH	High−Side Driver Output	BST + 0.3 V	−0.3 V wrt/SW −2.0 V < 200 ns wrt/SW
DRVL	Low−Side Driver Output	V_{CC} + 0.3 V	−0.3 V DC −5.0 V < 200 ns
IN	DRVH and DRVL Control Input	6.5 V	−0.3 V
$\overline{OD}$	Output Disable	6.5 V	−0.3 V

NOTE: All voltages are with respect to PGND except where noted.

ELECTRICAL CHARACTERISTICS (Note 4) (V_{CC} = 12 V, T_A = −20°C to +85°C, T_J = 0°C to +125°C unless otherwise noted.)

Characteristic	Symbol	Condition	Min	Typ	Max	Unit
Supply						
Supply Voltage Range	V_{CC}	–	4.6	–	13.2	V
Supply Current	I_{SYS}	BST = 12 V, IN = 0 V	–	0.7	2.0	mA
$\overline{OD}$ Input						
Input Voltage High	$V_{\overline{OD}_HI}$	–	2.0	–	–	V
Input Voltage Low	$V_{\overline{OD}_LO}$	–	–	–	0.8	V
Hysteresis		–	–	400	–	mV
Input Current		No internal pullup or pulldown resistors	−1.0	–	+1.0	μA
PWM Input						
Input Voltage High	V_{PWM_HI}	–	2.0	–	–	V
Input Voltage Low	V_{PWM_LO}	–	–	–	0.8	V

ELECTRICAL CHARACTERISTICS (Note 4) (V_{CC} = 12 V, T_A = −20°C to +85°C, T_J = 0°C to +125°C unless otherwise noted.)

Characteristic	Symbol	Condition	Min	Typ	Max	Unit
PWM Input						
Hysteresis	–	–	–	400	–	mV
Input Current	–	No internal pullup or pulldown resistors	−1.0	–	+1.0	μA
High−Side Driver						
Output Resistance, Sourcing Current	–	BST − SW = 12 V; T_A = −20°C to 85°C BST − SW = 12 V; T_A = 25°C	–	2.2 –	3.9 3.3	Ω
Output Resistance, Sinking Current	–	BST − SW = 12 V; T_A = −20°C to 85°C BST − SW = 12 V; T_A = 25°C	–	1.0 –	2.6 1.8	Ω
Output Resistance, Unbiased	–	BST − SW = 0 V	–	15	–	kΩ
Transition Times	t_{rDRVH} t_{fDRVH}	BST − SW = 12 V, C_{LOAD} = 3.0 nF (See Figure 3)	–	20 11	40 30	ns
Propagation Delay Times (Note 5)	$t_{pdhDRVH}$ $t_{pdlDRVH}$ $t_{pdl\overline{OD}}$ t_{pdhOD}	BST − SW = 12 V, C_{LOAD} = 3.0 nF (See Figure 3) BST − SW = 12 V, C_{LOAD} = 3.0 nF (See Figure 3) (See Figure 2) (See Figure 2)	32	45 25 20 25	70 35 35 55	ns
SW Pulldown Resitance	–	SW to PGND	–	15	–	kΩ
Low−Side Driver						
Output Resistance, Sourcing Current	–	T_A = −20°C to 85°C T_A = 25°C	–	1.8 –	3.9 3.3	Ω
Output Resistance, Sinking Current	–	T_A = −20°C to 85°C T_A = 25°C	–	1.0 –	2.6 1.8	Ω
Output Resistance, Unbiased	–	V_{CC} = PGND	–	15	–	kΩ
Transition Times	t_{rDRVL} t_{fDRVL}	C_{LOAD} = 3.0 nF, (See Figure 3)	–	16 11	35 30	ns
Propagation Delay Times (Note 5)	$t_{pdhDRVL}$ $t_{pdlDRVL}$ $t_{pdl\overline{OD}}$ t_{pdhOD}	C_{LOAD} = 3.0 nF, (See Figure 3) (Note 6, $t_{pdhDRVL}$ only) (See Figure 2) (See Figure 2)	–	12 15 20 20	35 45 35 35	ns
Timeout Delay	–	DRVH − SW = 0	–	85	–	ns
Undervoltage Lockout						
UVLO Startup	–	–	3.9	4.3	4.5	V
UVLO Shutdown	–	–	3.7	4.1	4.3	V
Hysteresis	–	–	0.1	0.2	0.4	V

Product parametric performance is indicated in the Electrical Characteristics for the listed test conditions, unless otherwise noted. Product performance may not be indicated by the Electrical Characteristics if operated under different conditions.

4. All limits at temperature extremes are guaranteed via correlation using standard Statistical Quality Control (SQC).
5. For propagation delays, “tpdh” refers to the specified signal going high; “tpdl” refers to it going low.
6. Guaranteed by design; not tested in production.

APPLICATIONS INFORMATION

Theory of Operation

The ADP3120A are single phase MOSFET drivers designed for driving two N−channel MOSFETs in a synchronous buck converter topology. The ADP3120A will operate from 5.0 V or 12 V, but have been optimized for high current multi−phase buck regulators that convert 12 V rail directly to the core voltage required by complex logic chips. A single PWM input signal is all that is required to properly drive the high−side and the low−side MOSFETs. Each driver is capable of driving a 3 nF load at frequencies up to 1 MHz.

Low−Side Driver

The low−side driver is designed to drive a ground−referenced low $R_{DS(on)}$ N−Channel MOSFET. The voltage rail for the low−side driver is internally connected to the V_{CC} supply and PGND.

High−Side Driver

The high−side driver is designed to drive a floating low $R_{DS(on)}$ N−channel MOSFET. The gate voltage for the high side driver is developed by a bootstrap circuit referenced to Switch Node (SW) pin.

The bootstrap circuit is comprised of an external diode, and an external bootstrap capacitor. When the ADP3120A are starting up, the SW pin is at ground, so the bootstrap capacitor will charge up to V_{CC} through the bootstrap diode See Figure 4. When the PWM input goes high, the high−side driver will begin to turn on the high−side MOSFET using the stored charge of the bootstrap capacitor. As the high−side MOSFET turns on, the SW pin will rise. When the high−side MOSFET is fully on, the switch node will be at 12 V, and the BST pin will be at 12 V plus the charge of the bootstrap capacitor (approaching 24 V).

The bootstrap capacitor is recharged when the switch node goes low during the next cycle.

Safety Timer and Overlap Protection Circuit

It is very important that MOSFETs in a synchronous buck regulator do not both conduct at the same time. Excessive shoot−through or cross conduction can damage the MOSFETs, and even a small amount of cross conduction will cause a decrease in the power conversion efficiency.

The ADP3120A prevent cross conduction by monitoring the status of the external mosfets and applying the appropriate amount of “dead−time” or the time between the turn off of one MOSFET and the turn on of the other MOSFET.

When the PWM input pin goes high, DRVL will go low after a propagation delay (tpdlDRVL). The time it takes for the low−side MOSFET to turn off (tfDRVL) is dependent on the total charge on the low−side MOSFET gate. The ADP3120A monitor the gate voltage of both MOSFETs and the switchnode voltage to determine the conduction status of the MOSFETs. Once the low−side MOSFET is turned off an internal timer will delay (tpdhDRVH) the turn on of the high−side MOSFET

Likewise, when the PWM input pin goes low, DRVH will go low after the propagation delay (tpdDRVH). The time to turn off the high−side MOSFET (tfDRVH) is dependent on the total gate charge of the high−side MOSFET. A timer will be triggered once the high−side mosfet has stopped conducting, to delay (tpdhDRVL) the turn on of the low−side MOSFET

Power Supply Decoupling

The ADP3120A can source and sink relatively large currents to the gate pins of the external MOSFETs. In order to maintain a constant and stable supply voltage (V_{CC}) a low ESR capacitor should be placed near the power and ground pins. A 1 μF to 4.7 μF multi layer ceramic capacitor (MLCC) is usually sufficient.

Input Pins

The PWM input and the Output Disable pins of the ADP3120A have internal protection for Electro Static Discharge (ESD), but in normal operation they present a relatively high input impedance. If the PWM controller does not have internal pulldown resistors, they should be added externally to ensure that the driver outputs do not go high before the controller has reached its under voltage lockout threshold. The NCP5381 controller does include a passive internal pulldown resistor on the drive−on output pin.

Bootstrap Circuit

The bootstrap circuit uses a charge storage capacitor (C_{BST}) and the internal (or an external) diode. Selection of these components can be done after the high−side MOSFET has been chosen. The bootstrap capacitor must have a voltage rating that is able to withstand twice the maximum supply voltage. A minimum 50 V rating is recommended. The capacitance is determined using the following equation:

$$C_{BST} = \frac{Q_{GATE}}{\Delta V_{BST}}$$

where Q_{GATE} is the total gate charge of the high−side MOSFET, and ΔV_{BST} is the voltage droop allowed on the high−side MOSFET drive. For example, a NTD60N03 has a total gate charge of about 30 nC. For an allowed droop of 300 mV, the required bootstrap capacitance is 100 nF. A good quality ceramic capacitor should be used.

The bootstrap diode must be rated to withstand the maximum supply voltage plus any peak ringing voltages that may be present on SW. The average forward current can be estimated by:

$$I_{F(AVG)} = Q_{GATE} \times f_{MAX}$$

where f_{MAX} is the maximum switching frequency of the controller. The peak surge current rating should be checked in−circuit, since this is dependent on the source impedance of the 12 V supply and the ESR of C_{BST}.

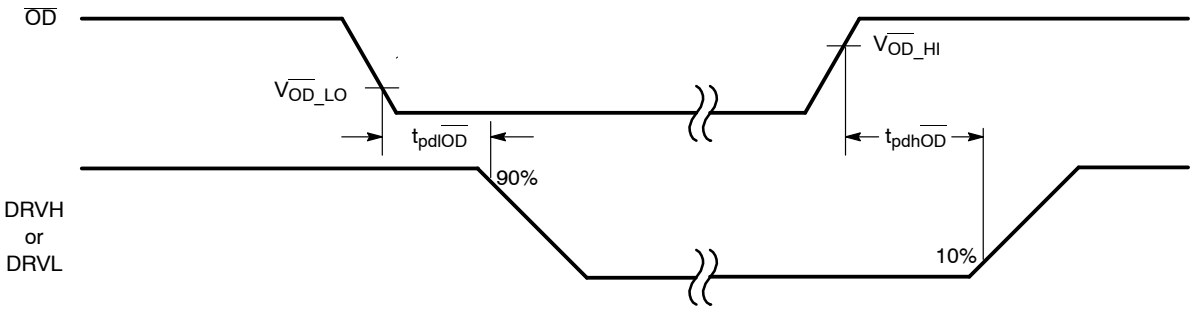

Figure 2. Output Disable Timing Diagram

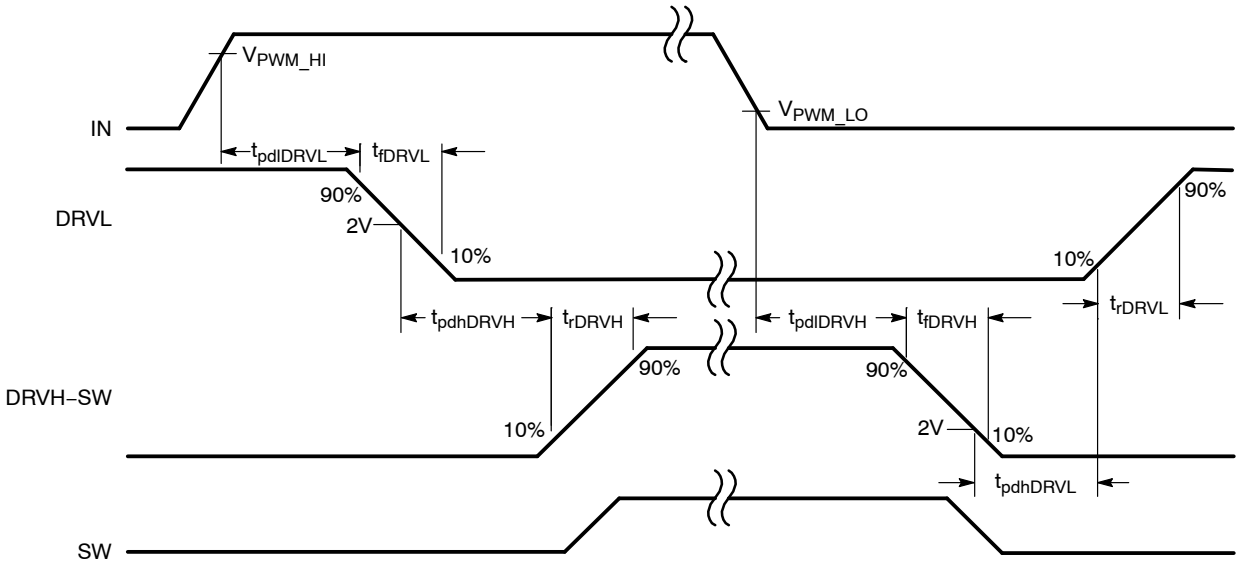

Figure 3. Nonoverlap Timing Diagram

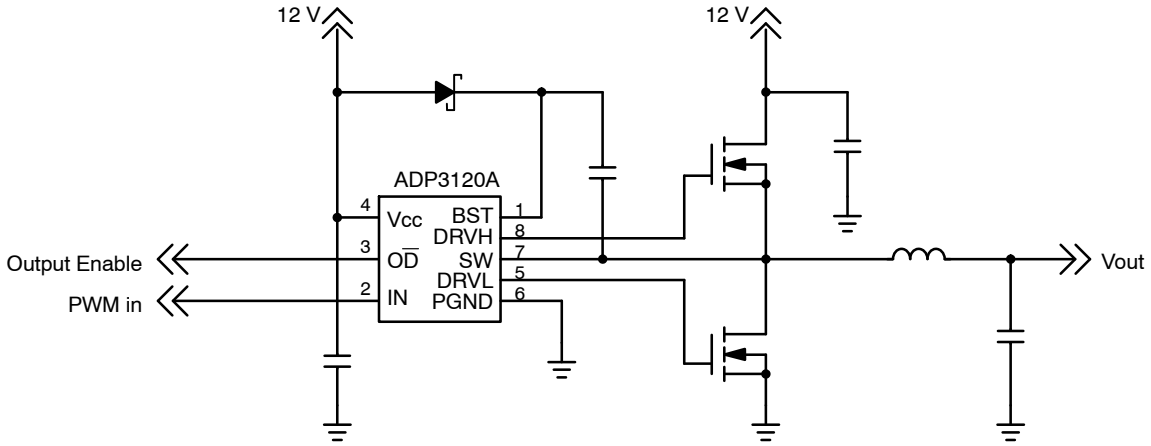

Figure 4. ADP3120A Example Circuit

FlexMode is a trademark of Rambus Inc.

DFN8 3x3, 0.5P
CASE 506BJ
ISSUE O

DATE 08 NOV 2007

1

SCALE 2:1

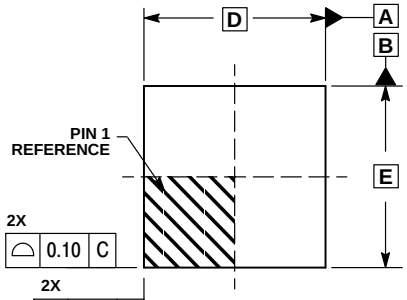

TOP VIEW

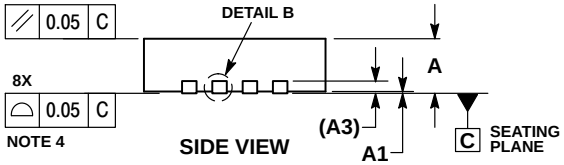

SIDE VIEW

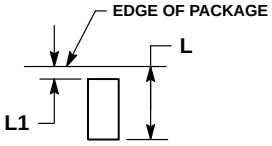

DETAIL A
OPTIONAL CONSTRUCTION

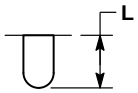

DETAIL A
OPTIONAL CONSTRUCTION

NOTES:
1. DIMENSIONS AND TOLERANCING PER ASME Y14.5M, 1994.
2. CONTROLLING DIMENSION: MILLIMETERS.
3. DIMENSION b APPLIES TO PLATED TERMINAL AND IS MEASURED BETWEEN 0.15 AND 0.30 MM FROM TERMINAL.
4. COPLANARITY APPLIES TO THE EXPOSED PAD AS WELL AS THE TERMINALS.

	MILLIMETERS	
DIM	MIN	MAX
A	0.80	1.00
A1	0.00	0.05
A3	0.20 REF	
b	0.18	0.30
D	3.00 BSC	
D2	1.64	1.84
E	3.00 BSC	
E2	1.35	1.55
e	0.50 BSC	
K	0.20	–––
L	0.30	0.50
L1	0.00	0.03

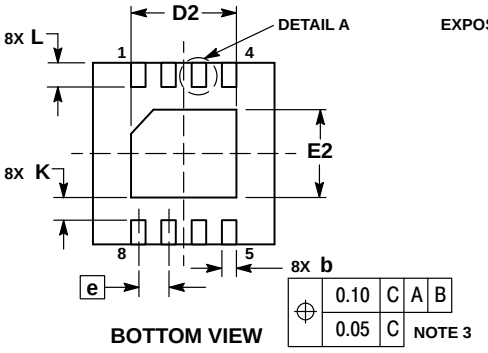

BOTTOM VIEW

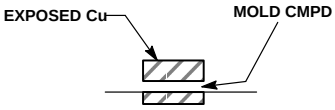

DETAIL B
OPTIONAL CONSTRUCTION

GENERIC MARKING DIAGRAM*

XXXXX = Specific Device Code
A = Assembly Location
L = Wafer Lot
Y = Year
W = Work Week
▪ = Pb−Free Package

(Note: Microdot may be in either location)

*This information is generic. Please refer to device data sheet for actual part marking.
Pb−Free indicator, “G” or microdot “ ▪”, may or may not be present.

SOLDERMASK DEFINED MOUNTING FOOTPRINT

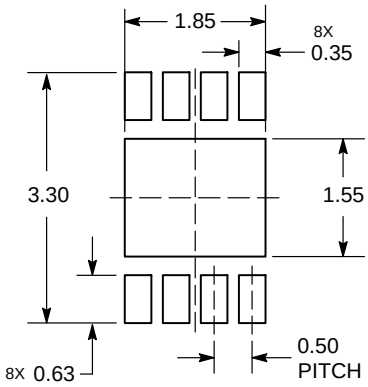

DIMENSION: MILLIMETERS

*For additional information on our Pb−Free strategy and soldering details, please download the **onsemi** Soldering and Mounting Techniques Reference Manual, SOLDERRM/D.

DOCUMENT NUMBER:	**98AON25786D**	Electronic versions are uncontrolled except when accessed directly from the Document Repository. Printed versions are uncontrolled except when stamped “CONTROLLED COPY” in red.
DESCRIPTION:	**DFN8 3X3, 0.5P**	**PAGE 1 OF 1**

onsemi and onsemi are trademarks of Semiconductor Components Industries, LLC dba **onsemi** or its subsidiaries in the United States and/or other countries. **onsemi** reserves the right to make changes without further notice to any products herein. **onsemi** makes no warranty, representation or guarantee regarding the suitability of its products for any particular purpose, nor does **onsemi** assume any liability arising out of the application or use of any product or circuit, and specifically disclaims any and all liability, including without limitation special, consequential or incidental damages. **onsemi** does not convey any license under its patent rights nor the rights of others.

SCALE 1:1

SOIC−8 NB
CASE 751−07
ISSUE AK

DATE 16 FEB 2011

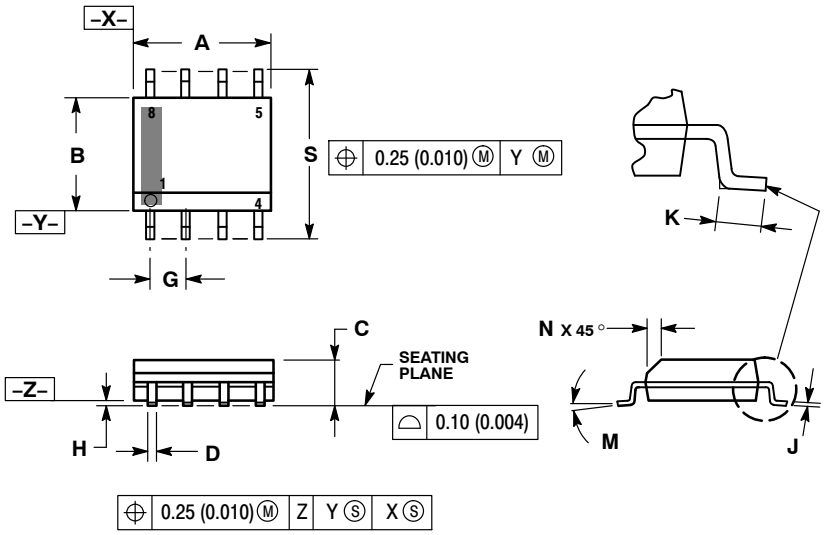

NOTES:
1. DIMENSIONING AND TOLERANCING PER ANSI Y14.5M, 1982.
2. CONTROLLING DIMENSION: MILLIMETER.
3. DIMENSION A AND B DO NOT INCLUDE MOLD PROTRUSION.
4. MAXIMUM MOLD PROTRUSION 0.15 (0.006) PER SIDE.
5. DIMENSION D DOES NOT INCLUDE DAMBAR PROTRUSION. ALLOWABLE DAMBAR PROTRUSION SHALL BE 0.127 (0.005) TOTAL IN EXCESS OF THE D DIMENSION AT MAXIMUM MATERIAL CONDITION.
6. 751−01 THRU 751−06 ARE OBSOLETE. NEW STANDARD IS 751−07.

	MILLIMETERS		INCHES	
DIM	MIN	MAX	MIN	MAX
A	4.80	5.00	0.189	0.197
B	3.80	4.00	0.150	0.157
C	1.35	1.75	0.053	0.069
D	0.33	0.51	0.013	0.020
G	1.27 BSC		0.050 BSC	
H	0.10	0.25	0.004	0.010
J	0.19	0.25	0.007	0.010
K	0.40	1.27	0.016	0.050
M	0 °	8 °	0 °	8 °
N	0.25	0.50	0.010	0.020
S	5.80	6.20	0.228	0.244

SOLDERING FOOTPRINT*

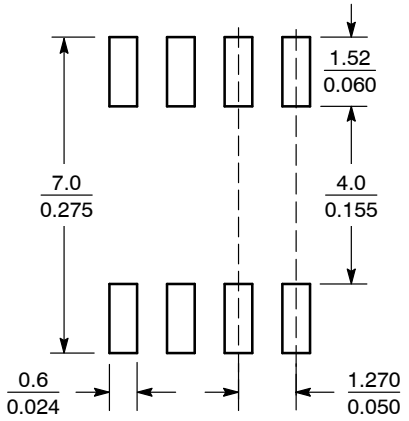

SCALE 6:1 (mm / inches)

*For additional information on our Pb−Free strategy and soldering details, please download the **onsemi** Soldering and Mounting Techniques Reference Manual, SOLDERRM/D.

GENERIC MARKING DIAGRAM*

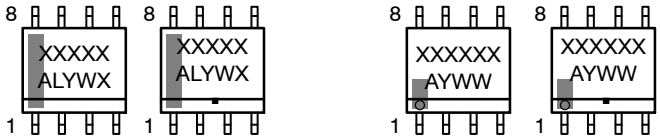

XXXXX = Specific Device Code
A = Assembly Location
L = Wafer Lot
Y = Year
W = Work Week
▪ = Pb−Free Package

XXXXXX = Specific Device Code
A = Assembly Location
Y = Year
WW = Work Week
▪ = Pb−Free Package

*This information is generic. Please refer to device data sheet for actual part marking. Pb−Free indicator, "G" or microdot "▪", may or may not be present. Some products may not follow the Generic Marking.

STYLES ON PAGE 2

DOCUMENT NUMBER:	98ASB42564B	Electronic versions are uncontrolled except when accessed directly from the Document Repository. Printed versions are uncontrolled except when stamped "CONTROLLED COPY" in red.
DESCRIPTION:	SOIC−8 NB	PAGE 1 OF 2

onsemi and onsemi are trademarks of Semiconductor Components Industries, LLC dba **onsemi** or its subsidiaries in the United States and/or other countries. **onsemi** reserves the right to make changes without further notice to any products herein. **onsemi** makes no warranty, representation or guarantee regarding the suitability of its products for any particular purpose, nor does **onsemi** assume any liability arising out of the application or use of any product or circuit, and specifically disclaims any and all liability, including without limitation special, consequential or incidental damages. **onsemi** does not convey any license under its patent rights nor the rights of others.

SOIC−8 NB
CASE 751−07
ISSUE AK

DATE 16 FEB 2011

STYLE 1:
PIN 1. EMITTER
2. COLLECTOR
3. COLLECTOR
4. EMITTER
5. EMITTER
6. BASE
7. BASE
8. EMITTER

STYLE 2:
PIN 1. COLLECTOR, DIE, #1
2. COLLECTOR, #1
3. COLLECTOR, #2
4. COLLECTOR, #2
5. BASE, #2
6. EMITTER, #2
7. BASE, #1
8. EMITTER, #1

STYLE 3:
PIN 1. DRAIN, DIE #1
2. DRAIN, #1
3. DRAIN, #2
4. DRAIN, #2
5. GATE, #2
6. SOURCE, #2
7. GATE, #1
8. SOURCE, #1

STYLE 4:
PIN 1. ANODE
2. ANODE
3. ANODE
4. ANODE
5. ANODE
6. ANODE
7. ANODE
8. COMMON CATHODE

STYLE 5:
PIN 1. DRAIN
2. DRAIN
3. DRAIN
4. DRAIN
5. GATE
6. GATE
7. SOURCE
8. SOURCE

STYLE 6:
PIN 1. SOURCE
2. DRAIN
3. DRAIN
4. SOURCE
5. SOURCE
6. GATE
7. GATE
8. SOURCE

STYLE 7:
PIN 1. INPUT
2. EXTERNAL BYPASS
3. THIRD STAGE SOURCE
4. GROUND
5. DRAIN
6. GATE 3
7. SECOND STAGE Vd
8. FIRST STAGE Vd

STYLE 8:
PIN 1. COLLECTOR, DIE #1
2. BASE, #1
3. BASE, #2
4. COLLECTOR, #2
5. COLLECTOR, #2
6. EMITTER, #2
7. EMITTER, #1
8. COLLECTOR, #1

STYLE 9:
PIN 1. EMITTER, COMMON
2. COLLECTOR, DIE #1
3. COLLECTOR, DIE #2
4. EMITTER, COMMON
5. EMITTER, COMMON
6. BASE, DIE #2
7. BASE, DIE #1
8. EMITTER, COMMON

STYLE 10:
PIN 1. GROUND
2. BIAS 1
3. OUTPUT
4. GROUND
5. GROUND
6. BIAS 2
7. INPUT
8. GROUND

STYLE 11:
PIN 1. SOURCE 1
2. GATE 1
3. SOURCE 2
4. GATE 2
5. DRAIN 2
6. DRAIN 2
7. DRAIN 1
8. DRAIN 1

STYLE 12:
PIN 1. SOURCE
2. SOURCE
3. SOURCE
4. GATE
5. DRAIN
6. DRAIN
7. DRAIN
8. DRAIN

STYLE 13:
PIN 1. N.C.
2. SOURCE
3. SOURCE
4. GATE
5. DRAIN
6. DRAIN
7. DRAIN
8. DRAIN

STYLE 14:
PIN 1. N−SOURCE
2. N−GATE
3. P−SOURCE
4. P−GATE
5. P−DRAIN
6. P−DRAIN
7. N−DRAIN
8. N−DRAIN

STYLE 15:
PIN 1. ANODE 1
2. ANODE 1
3. ANODE 1
4. ANODE 1
5. CATHODE, COMMON
6. CATHODE, COMMON
7. CATHODE, COMMON
8. CATHODE, COMMON

STYLE 16:
PIN 1. EMITTER, DIE #1
2. BASE, DIE #1
3. EMITTER, DIE #2
4. BASE, DIE #2
5. COLLECTOR, DIE #2
6. COLLECTOR, DIE #2
7. COLLECTOR, DIE #1
8. COLLECTOR, DIE #1

STYLE 17:
PIN 1. VCC
2. V2OUT
3. V1OUT
4. TXE
5. RXE
6. VEE
7. GND
8. ACC

STYLE 18:
PIN 1. ANODE
2. ANODE
3. SOURCE
4. GATE
5. DRAIN
6. DRAIN
7. CATHODE
8. CATHODE

STYLE 19:
PIN 1. SOURCE 1
2. GATE 1
3. SOURCE 2
4. GATE 2
5. DRAIN 2
6. MIRROR 2
7. DRAIN 1
8. MIRROR 1

STYLE 20:
PIN 1. SOURCE (N)
2. GATE (N)
3. SOURCE (P)
4. GATE (P)
5. DRAIN
6. DRAIN
7. DRAIN
8. DRAIN

STYLE 21:
PIN 1. CATHODE 1
2. CATHODE 2
3. CATHODE 3
4. CATHODE 4
5. CATHODE 5
6. COMMON ANODE
7. COMMON ANODE
8. CATHODE 6

STYLE 22:
PIN 1. I/O LINE 1
2. COMMON CATHODE/VCC
3. COMMON CATHODE/VCC
4. I/O LINE 3
5. COMMON ANODE/GND
6. I/O LINE 4
7. I/O LINE 5
8. COMMON ANODE/GND

STYLE 23:
PIN 1. LINE 1 IN
2. COMMON ANODE/GND
3. COMMON ANODE/GND
4. LINE 2 IN
5. LINE 2 OUT
6. COMMON ANODE/GND
7. COMMON ANODE/GND
8. LINE 1 OUT

STYLE 24:
PIN 1. BASE
2. EMITTER
3. COLLECTOR/ANODE
4. COLLECTOR/ANODE
5. CATHODE
6. CATHODE
7. COLLECTOR/ANODE
8. COLLECTOR/ANODE

STYLE 25:
PIN 1. VIN
2. N/C
3. REXT
4. GND
5. IOUT
6. IOUT
7. IOUT
8. IOUT

STYLE 26:
PIN 1. GND
2. dv/dt
3. ENABLE
4. ILIMIT
5. SOURCE
6. SOURCE
7. SOURCE
8. VCC

STYLE 27:
PIN 1. ILIMIT
2. OVLO
3. UVLO
4. INPUT+
5. SOURCE
6. SOURCE
7. SOURCE
8. DRAIN

STYLE 28:
PIN 1. SW_TO_GND
2. DASIC_OFF
3. DASIC_SW_DET
4. GND
5. V_MON
6. VBULK
7. VBULK
8. VIN

STYLE 29:
PIN 1. BASE, DIE #1
2. EMITTER, #1
3. BASE, #2
4. EMITTER, #2
5. COLLECTOR, #2
6. COLLECTOR, #2
7. COLLECTOR, #1
8. COLLECTOR, #1

STYLE 30:
PIN 1. DRAIN 1
2. DRAIN 1
3. GATE 2
4. SOURCE 2
5. SOURCE 1/DRAIN 2
6. SOURCE 1/DRAIN 2
7. SOURCE 1/DRAIN 2
8. GATE 1

DOCUMENT NUMBER:	98ASB42564B	Electronic versions are uncontrolled except when accessed directly from the Document Repository. Printed versions are uncontrolled except when stamped "CONTROLLED COPY" in red.
DESCRIPTION:	SOIC−8 NB	PAGE 2 OF 2

onsemi and onsemi are trademarks of Semiconductor Components Industries, LLC dba **onsemi** or its subsidiaries in the United States and/or other countries. **onsemi** reserves the right to make changes without further notice to any products herein. **onsemi** makes no warranty, representation or guarantee regarding the suitability of its products for any particular purpose, nor does **onsemi** assume any liability arising out of the application or use of any product or circuit, and specifically disclaims any and all liability, including without limitation special, consequential or incidental damages. **onsemi** does not convey any license under its patent rights nor the rights of others.

onsemi, onsemi, and other names, marks, and brands are registered and/or common law trademarks of Semiconductor Components Industries, LLC dba "**onsemi**" or its affiliates and/or subsidiaries in the United States and/or other countries. **onsemi** owns the rights to a number of patents, trademarks, copyrights, trade secrets, and other intellectual property. A listing of **onsemi**'s product/patent coverage may be accessed at www.onsemi.com/site/pdf/Patent−Marking.pdf. **onsemi** reserves the right to make changes at any time to any products or information herein, without notice. The information herein is provided "as−is" and **onsemi** makes no warranty, representation or guarantee regarding the accuracy of the information, product features, availability, functionality, or suitability of its products for any particular purpose, nor does **onsemi** assume any liability arising out of the application or use of any product or circuit, and specifically disclaims any and all liability, including without limitation special, consequential or incidental damages. Buyer is responsible for its products and applications using **onsemi** products, including compliance with all laws, regulations and safety requirements or standards, regardless of any support or applications information provided by **onsemi**. "Typical" parameters which may be provided in **onsemi** data sheets and/or specifications can and do vary in different applications and actual performance may vary over time. All operating parameters, including "Typicals" must be validated for each customer application by customer's technical experts. **onsemi** does not convey any license under any of its intellectual property rights nor the rights of others. **onsemi** products are not designed, intended, or authorized for use as a critical component in life support systems or any FDA Class 3 medical devices or medical devices with a same or similar classification in a foreign jurisdiction or any devices intended for implantation in the human body. Should Buyer purchase or use **onsemi** products for any such unintended or unauthorized application, Buyer shall indemnify and hold **onsemi** and its officers, employees, subsidiaries, affiliates, and distributors harmless against all claims, costs, damages, and expenses, and reasonable attorney fees arising out of, directly or indirectly, any claim of personal injury or death associated with such unintended or unauthorized use, even if such claim alleges that **onsemi** was negligent regarding the design or manufacture of the part. **onsemi** is an Equal Opportunity/Affirmative Action Employer. This literature is subject to all applicable copyright laws and is not for resale in any manner.

ADDITIONAL INFORMATION

TECHNICAL PUBLICATIONS:
Technical Library: www.onsemi.com/design/resources/technical−documentation
onsemi Website: www.onsemi.com

ONLINE SUPPORT: www.onsemi.com/support
For additional information, please contact your local Sales Representative at
www.onsemi.com/support/sales

Mouser Electronics

Authorized Distributor

Click to View Pricing, Inventory, Delivery & Lifecycle Information:

onsemi:

ADP3120AJRZ-RL ADP3120AJCPZ-RL