ISL28130, ISL28230, ISL28430

Single, Dual, and Quad Micropower, Low Drift, RRIO Operational Amplifiers

FN7623
Rev 7.00
February 13, 2014

The ISL28130, ISL28230 and ISL28430 are single, dual and quad micropower, low offset drift operational amplifiers that are optimized for single and dual supply operation from 1.8V to 5.5V and ±0.9V to ±2.75V. Their low supply current of 20µA and rail-to-rail input/output enable the ISL28130, ISL28230, and ISL28430 to be an excellent general-purpose op amp for a range of applications. The ISL28130, ISL28230 and ISL28430 are ideal for handheld devices that operate off 2AA or single Li-ion batteries.

The ISL28130 is available in industry standard pinouts for 5 Ld SOT-23, 5 Ld SC70 and 8 Ld SOIC packages. The ISL28230 is available in industry standard pinouts for 8 Ld MSOP, 8 Ld SOIC and 8 Ld DFN packages. The ISL28430 is available in 14 Ld TSSOP and 14 Ld SOIC packages. Commercial devices operate over the temperature range of 0°C to 70°C. Full temperature range devices operate over the temperature range of -40°C to 125°C.

Features

- Low input offset voltage . . . . . 40µV, Max.
- Low offset drift . . . . . .150nV/°C, Max.
- Input bias current. . . . . .250pA, Max.
- Quiescent current (per amplifier). . . . . .20µA, Typ.
- Single supply range . . . . . .+1.8V to +5.5V
- Dual supply range . . . . . .±0.9V to ±2.75V
- Low noise (0.01Hz to 10Hz) . . . . . .1.1µV_{P-P}, Typ.
- Rail-to-rail inputs and output

Applications

- Bi-directional current sense
- Temperature measurement
- Medical equipment
- Electronic weigh scales
- Precision/strain gauge sensor
- Precision regulation
- Low Ohmic current sense
- High gain analog front ends

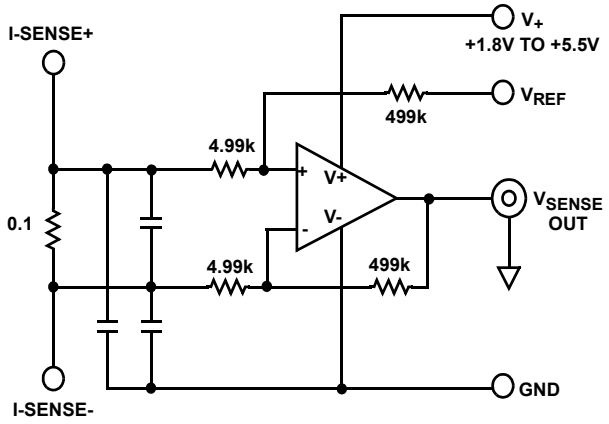

BI-DIRECTIONAL CURRENT SENSE AMPLIFIER

FIGURE 1. TYPICAL APPLICATION DIAGRAM

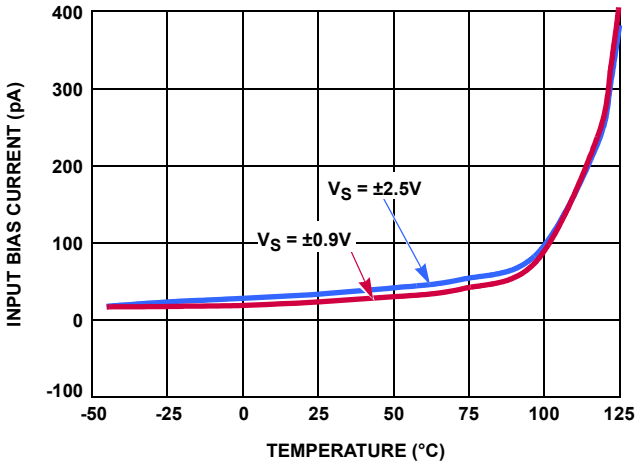

FIGURE 2. I_B vs TEMPERATURE

Ordering Information

PART NUMBER (Notes 3, 4)	PART MARKING	TEMP RANGE (°C)	TEMPERATURE GRADE	PACKAGE (Pb-Free)	PKG. DWG. #
ISL28130CHZ-T7 (Note 2)	BDPA (Note 5)	0 to +70	Commercial	5 Ld SOT-23	P5.064A
ISL28130CHZ-T7A (Note 2)	BDPA (Note 5)	0 to +70	Commercial	5 Ld SOT-23	P5.064A
ISL28130FHZ-T7 (Note 2)	BEFA (Note 5)	-40 to +125	Full	5 Ld SOT-23	P5.064A
ISL28130FHZ-T7A (Note 2)	BEFA (Note 5)	-40 to +125	Full	5 Ld SOT-23	P5.064A
ISL28130CEZ-T7 (Note 2)	BLA (Note 5)	0 to +70	Commercial	5 Ld SC-70	P5.049
ISL28130CEZ-T7A (Note 2)	BLA (Note 5)	0 to +70	Commercial	5 Ld SC-70	P5.049
ISL28130FEZ-T7 (Note 2)	BNA (Note 5)	-40 to +125	Full	5 Ld SC-70	P5.049
ISL28130FEZ-T7A (Note 2)	BNA (Note 5)	-40 to +125	Full	5 Ld SC-70	P5.049
ISL28230CUZ (Note 1)	8230Z	0 to +70	Commercial	8 Ld MSOP	M8.118A
ISL28230FUZ (Note 1)	8230F	-40 to +125	Full	8 Ld MSOP	M8.118A
ISL28230CBZ (Note 1)	28230 CBZ	0 to +70	Commercial	8 Ld SOIC	M8.15E
ISL28230FBZ (Note 1)	28230 FBZ	-40 to +125	Full	8 Ld SOIC	M8.15E
ISL28230CRZ (Note 1)	230Z	0 to +70	Commercial	8 Ld 3mmx3mm DFN	L8.3x3J
ISL28230FRZ (Note 1)	230F	-40 to +125	Full	8 Ld 3mmx3mm DFN	L8.3x3J
ISL28430CBZ (Note 1)	28430 CBZ	0 to +70	Commercial	14 Ld SOIC	MDP0027
ISL28430FBZ (Note 1)	28430 FBZ	-40 to +125	Full	14 Ld SOIC	MDP0027
ISL28430CVZ (Note 1)	28430 CVZ	0 to +70	Commercial	14 Ld TSSOP	MDP0044
ISL28430FVZ (Note 1)	28430 FVZ	-40 to +125	Full	14 Ld TSSOP	MDP0044

NOTES:

1. Add "-T*" suffix for tape and reel. Please refer to TB347 for details on reel specifications.
2. Please refer to TB347 for details on reel specifications.
3. These Intersil Pb-free plastic packaged products employ special Pb-free material sets, molding compounds/die attach materials, and 100% matte tin plate plus anneal (e3 termination finish, which is RoHS compliant and compatible with both SnPb and Pb-free soldering operations). Intersil Pb-free products are MSL classified at Pb-free peak reflow temperatures that meet or exceed the Pb-free requirements of IPC/JEDEC J STD-020.
4. For Moisture Sensitivity Level (MSL), please see device information page for ISL28130, ISL28230, ISL28430. For more information on MSL please see Tech Brief TB363.
5. The part marking is located on the bottom of the part.

Pin Configurations

ISL28130
(5 LD SOT-23)
TOP VIEW

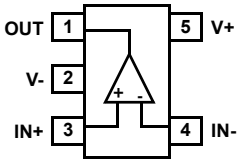

ISL28130
(8 LD SOIC)
TOP VIEW

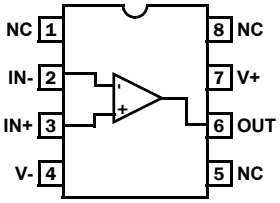

ISL28130
(5 LD SC-70)
TOP VIEW

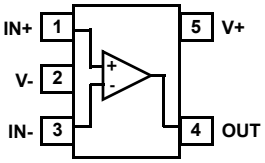

ISL28230
(8 LD MSOP, SOIC)
TOP VIEW

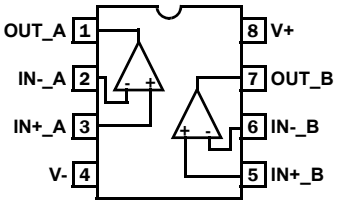

ISL28230
(8 LD DFN)
TOP VIEW

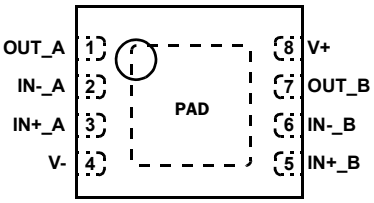

ISL28430
(14 LD TSSOP, SOIC)
TOP VIEW

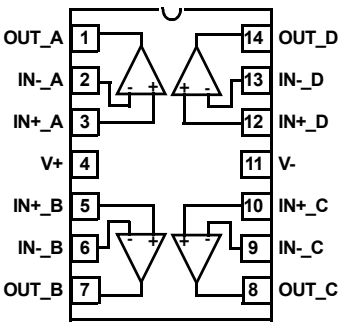

Pin Descriptions

ISL28130 (5 Ld SOT-23)	ISL28130 (8 Ld SOIC)	ISL28130 (5 LD SC-70)	ISL28230 (8 Ld MSOP, SOIC, DFN)	ISL28430 (14 Ld TSSOP, SOIC)	PIN NAME	FUNCTION	EQUIVALENT CIRCUIT
3	3	1	 3 5 - -	 3 5 10 12	IN+ IN+_A IN+_B IN+_C IN+_D	Non-inverting input	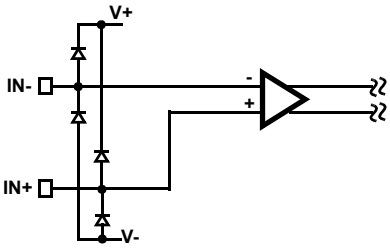 Circuit 1
2	4	2	4	11	V-	Negative supply	
4	2	3	 2 6 - -	 2 6 9 13	IN- IN-_A IN-_B IN-_C IN-_D	Inverting input	(See “Circuit 1”)
1	6	4	 1 7 - -	 1 7 8 14	OUT OUT_A OUT_B OUT_C OUT_D	Output	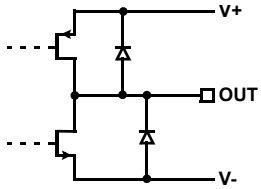 Circuit 2
5	7	5	8	4	V+	Positive supply	
-	1, 5, 8	-	-	-	NC	Not Connected – This pin is not electrically connected internally.	
-	-	-	PAD	-	Paddle	Thermal Pad. Connect to most negative supply. DFN packages only.	

Absolute Maximum Ratings

Max Supply Voltage V+ to V- 6.5V
Max Voltage VIN to GND . . . . . (V- - 0.3V) to (V+ + 0.3V)V
Max Input Differential Voltage 6.5V
Max Input Current 20mA
Max Voltage VOUT to GND (10s). . . . . (V- - 0.5V) to (V+ + 0.5V)V
ESD Tolerance (ISL28130)
Human Body Model (Tested at JESD22-A114F). 3000V
Machine Model (Tested at JESD22-A115B) 200V
Charged Device Model (Tested at JESD22-C110D) 1500V
ESD Tolerance (ISL28230, ISL28430)
Human Body Model (Tested at JESD22-A114F). 4000V
Machine Model (Tested at JESD22-A115B) 400V
Charged Device Model (Tested at JESD22-C110D) 2000V
Latch-Up (Passed Per JESD78B). . . . . +125°C

Thermal Information

Thermal Resistance (Typical)	θ_{JA} (°C/W)	θ_{JC} (°C/W)
5 Ld SOT-23 (Notes 6, 8)	225	110
5 Ld SC70 (Notes 6, 8)	206	146
8 Ld SOIC (ISL28130) (Notes 6, 8)	135	95
8 Ld MSOP (Notes 6, 8)	180	65
8 Ld SOIC (ISL28230) (Notes 6, 8)	125	90
8 Ld DFN (Notes 7, 9)	53	12
14 Ld TSSOP (Notes 6, 8)	110	40
14 Ld SOIC (Notes 6, 8)	75	47

Maximum Storage Temperature Range . . . . . -65°C to +150°C
Pb-Free Reflow Profile . . . . . see link below
http://www.intersil.com/pbfree/Pb-FreeReflow.asp

Operating Conditions

Temperature Range
Full Grade Devices . . . . . -40°C to +125°C
Commercial Grade Devices. . . . . 0°C to +70°C

CAUTION: Do not operate at or near the maximum ratings listed for extended periods of time. Exposure to such conditions may adversely impact product reliability and result in failures not covered by warranty.

NOTES:

6. θ_{JA} is measured with the component mounted on a high effective thermal conductivity test board in free air. See Tech Brief TB379 for details.
7. θ_{JA} is measured in free air with the component mounted on a high effective thermal conductivity test board with "direct attach" features. See Tech Brief TB379.
8. For θ_{JC}, the "case temp" location is taken at the package top center.
9. For θ_{JC}, the "case temp" location is the center of the exposed metal pad on the package underside.

Electrical Specifications

V_+ = 5V, V_- = 0V, V_{CM} = 2.5V, T_A = +25°C, R_L = 10kΩ, unless otherwise specified. **Boldface limits apply over the entire operating temperature range.**

PARAMETER	DESCRIPTION	CONDITIONS	MIN (Note 10)	TYP	MAX (Note 10)	UNIT
DC SPECIFICATIONS						
V_{OS}	Input Offset Voltage	Vs = 1.8V to 5.5V	-40	±5	40	µV
		Vs = 1.8 to 5.5V; T = 0°C to +70°C	**-46.8**		**46.8**	µV
		Vs = 1.8V to 5.5V; T = -40°C to +125°C	**-55**		**55**	µV
TCV_{OS}	Input Offset Voltage Temperature Coefficient		**-150**	20	**150**	nV/°C
I_{OS}	Input Offset Current			-60		pA
TCI_{OS}	Input Offset Current Temperature Coefficient			0.11		pA/°C
I_B	Input Bias Current	T = 0°C to +70°C	**-250**		**250**	pA
		T = -40°C to +125°C	**-700**		**700**	pA
Common Mode Input Voltage Range		Guaranteed by CMRR	**-0.1**		**5.1**	V
CMRR	Common Mode Rejection Ratio	V_{CM} = -0.1V to 5.1V	110	125		dB
			105			dB
PSRR	Power Supply Rejection Ratio	Vs = 2.0V to 5.5V	105	138		dB
			105			dB
V_{OH}	Output Voltage Swing, High		**4.950**	4.981		V
V_{OL}	Output Voltage Swing, Low			18	**50**	mV

Electrical Specifications V_+ = 5V, V_- = 0V, V_{CM} = 2.5V, T_A = +25°C, R_L = 10kΩ, unless otherwise specified. **Boldface limits apply over the entire operating temperature range. (Continued)**

PARAMETER	DESCRIPTION	CONDITIONS	MIN (Note 10)	TYP	MAX (Note 10)	UNIT
A_{OL}	Open Loop Gain	R_L = 1MΩ		150		dB
V_+	Supply Voltage	Guaranteed by V_{OS}	**1.8**		**5.5**	V
I_S	Supply Current, Per Amplifier	R_L = OPEN		20	25	µA
					35	µA
I_{SC+}	Output Source Short Circuit Current	R_L = Short V-		15		mA
I_{SC-}	Output Sink Short Circuit Current	R_L = Short V+		-15		mA
AC SPECIFICATIONS						
GBWP	Gain Bandwidth Product	A_V = 100, R_F = 100kΩ, R_G = 1kΩ, R_L = 10kΩ to V_{CM}		400		kHz
e_N V_{P-P}	Peak-to-Peak Input Noise Voltage	f = 0.01Hz to 10Hz		1.1		$µV_{P-P}$
e_N	Input Noise Voltage Density	f = 1kHz		65		nV/√(Hz)
i_N	Input Noise Current Density	f = 1kHz		72		fA/√(Hz)
		f = 10Hz		80		fA/√(Hz)
C_{in}	Differential Input Capacitance	f = 1MHz		1.6		pF
	Common Mode Input Capacitance			1.12		pF
TRANSIENT RESPONSE						
SR	Positive Slew Rate	V_{OUT} = 1V to 4V, R_L = 10kΩ		0.2		V/µs
	Negative Slew Rate			0.1		V/µs
t_r, t_f, Small Signal	Rise Time, t_r 10% to 90%	A_V = +1, V_{OUT} = 0.1V_{P-P}, R_F = 0Ω, R_L = 10kΩ, C_L = 1.2pF		1.1		µs
	Fall Time, t_f 10% to 90%			1.1		µs
t_r, t_f Large Signal	Rise Time, t_r 10% to 90%	A_V = +1, V_{OUT} = 2V_{P-P}, R_F = 0Ω, R_L = 10kΩ, C_L = 1.2pF		20		µs
	Fall Time, t_f 10% to 90%			30		µs
t_s	Settling Time to 0.1%, 2V_{P-P} Step	A_V = +1, R_F = 0Ω, R_L = 10kΩ, C_L = 1.2pF		35		µs
$t_{recover}$	Output Overload Recovery Time, Recovery to 90% of Output Saturation	A_V = +2, R_F = 10kΩ, R_L = Open, C_L = 3.7pF		10.5		µs

NOTE:

10. Compliance to datasheet limits is assured by one or more methods: production test, characterization and/or design.

Typical Performance Curves

V+ = 5V, V- = 0V, V_{CM} = 2.5V, R_L = Open, T = +25°C, unless otherwise specified.

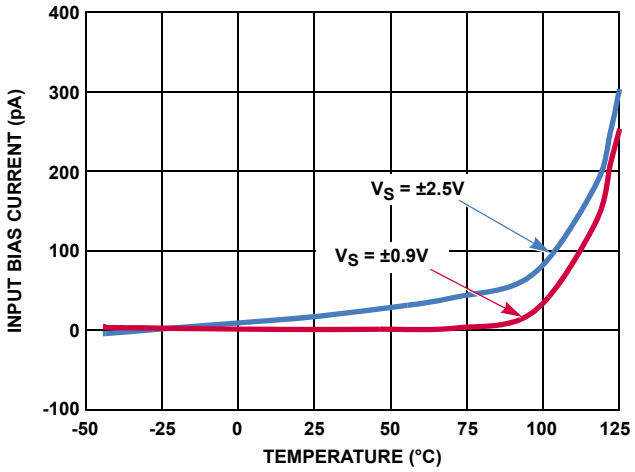

FIGURE 3. I_{B+} vs TEMPERATURE

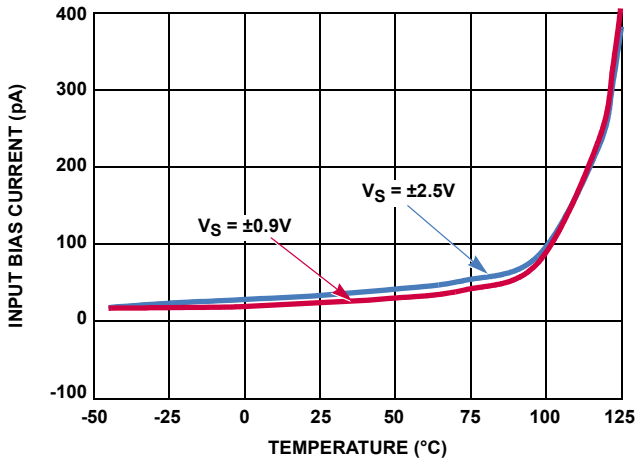

FIGURE 4. I_{B-} vs TEMPERATURE

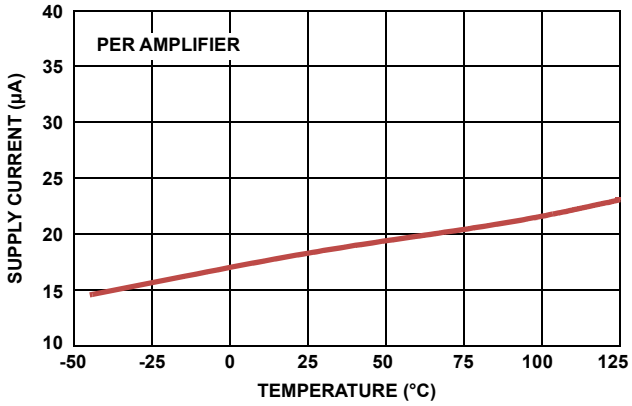

FIGURE 5. SUPPLY CURRENT vs TEMPERATURE, Vs = ±0.9V

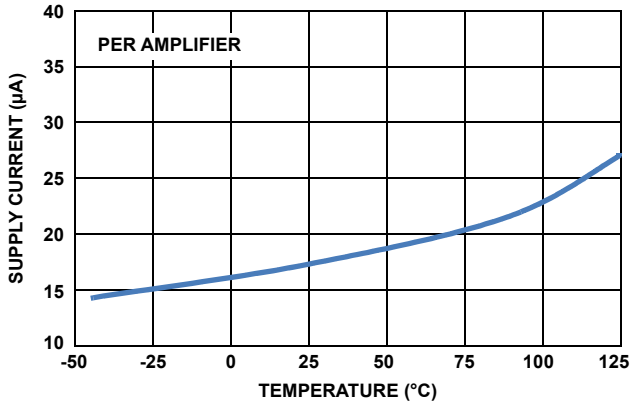

FIGURE 6. SUPPLY CURRENT vs TEMPERATURE, Vs = ±2.5V

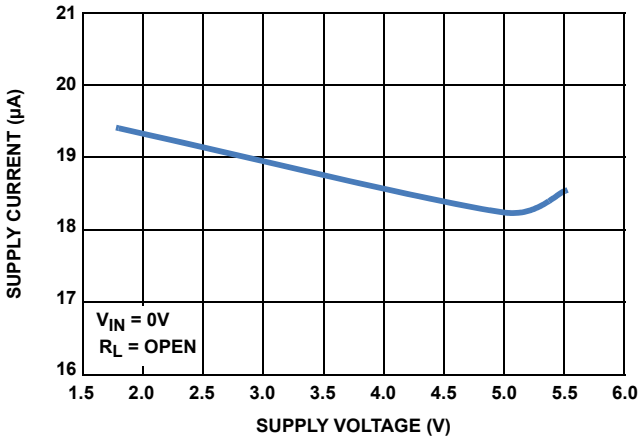

FIGURE 7. SUPPLY CURRENT vs SUPPLY VOLTAGE

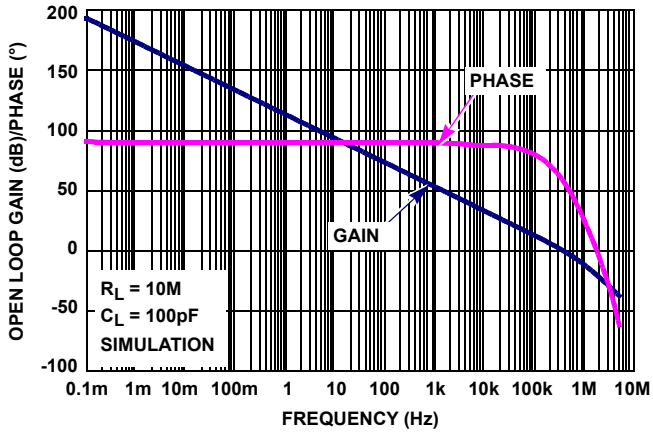

FIGURE 8. FREQUENCY RESPONSE vs OPEN LOOP GAIN, R_L = 10MΩ

Typical Performance Curves

V+ = 5V, V- = 0V, V_{CM} = 2.5V, R_L = Open, T = +25°C, unless otherwise specified.

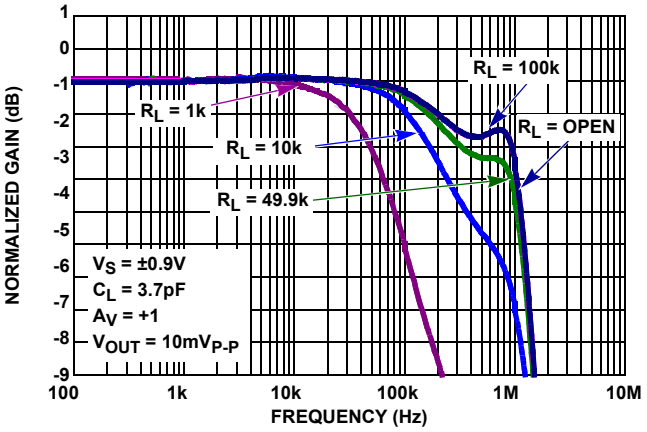

FIGURE 9. GAIN vs FREQUENCY vs R_L, V_S = ±0.9V

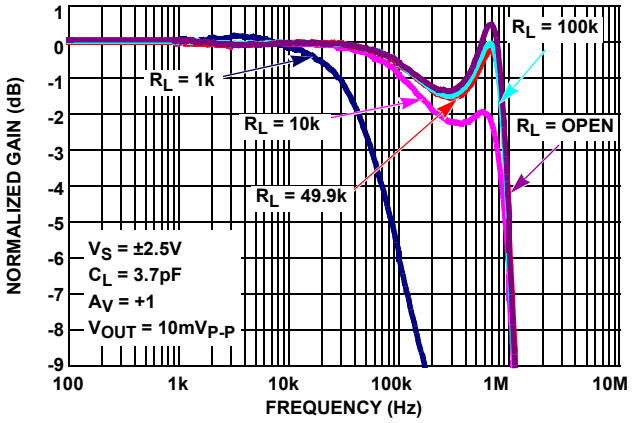

FIGURE 10. GAIN vs FREQUENCY vs R_L, V_S = ±2.5V

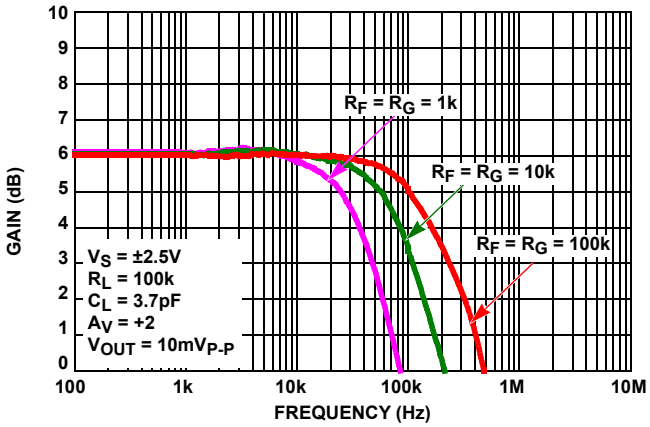

FIGURE 11. GAIN vs FREQUENCY vs FEEDBACK RESISTOR VALUES R_F/R_G

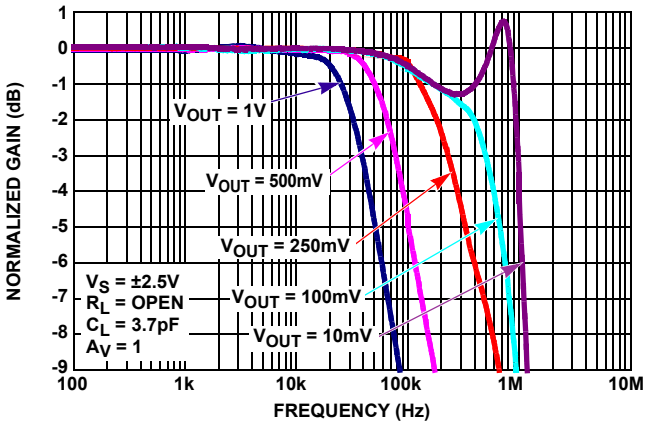

FIGURE 12. GAIN vs FREQUENCY vs V_{OUT}

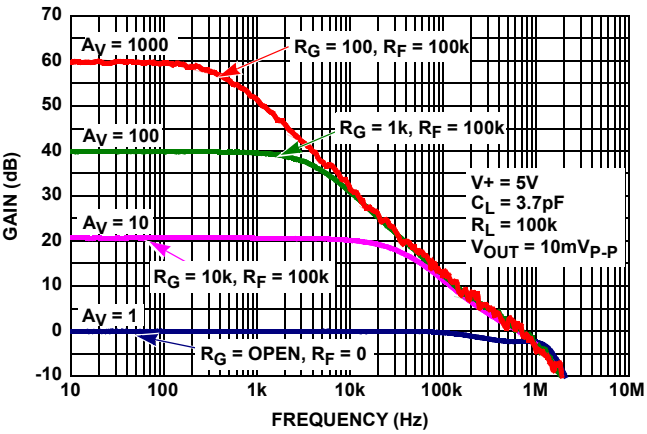

FIGURE 13. FREQUENCY RESPONSE vs CLOSED LOOP GAIN

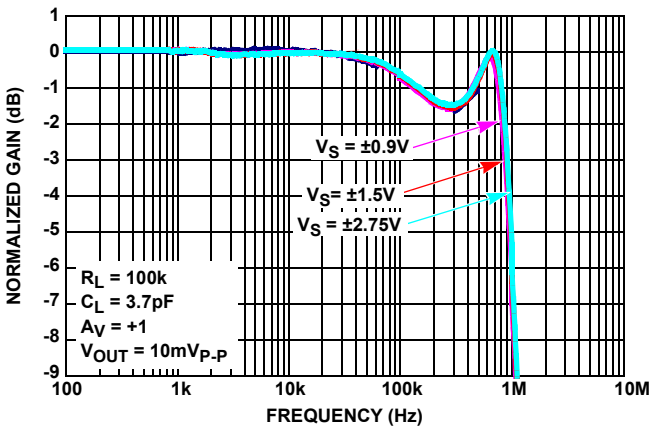

FIGURE 14. GAIN vs FREQUENCY vs SUPPLY VOLTAGE

Typical Performance Curves

V+ = 5V, V- = 0V, V_{CM} = 2.5V, R_L = Open, T = +25°C, unless otherwise specified.

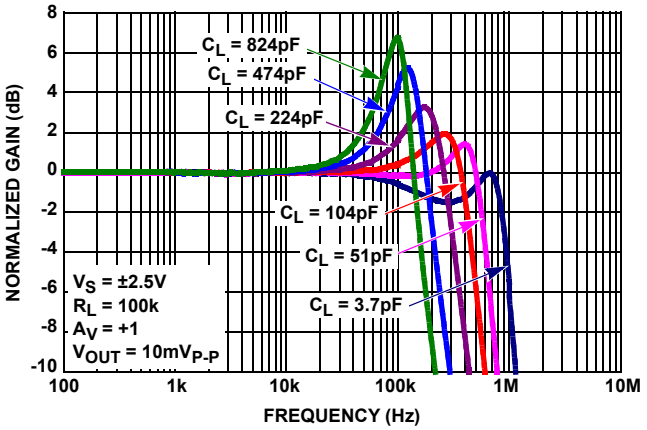

FIGURE 15. GAIN vs FREQUENCY vs C_L

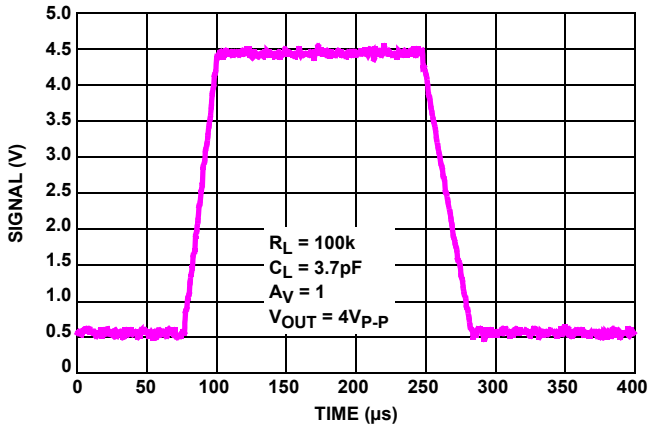

FIGURE 16. LARGE SIGNAL STEP RESPONSE (4V)

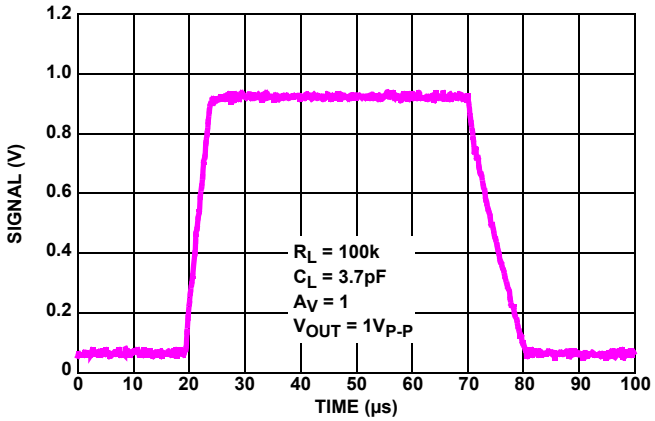

FIGURE 17. LARGE SIGNAL STEP RESPONSE (1V)

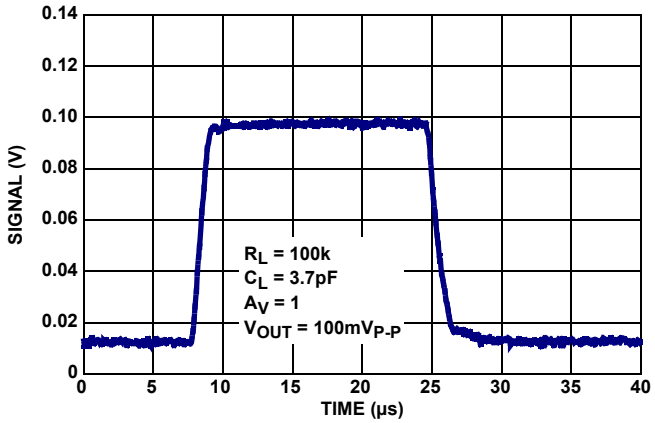

FIGURE 18. SMALL SIGNAL STEP RESPONSE (100mV)

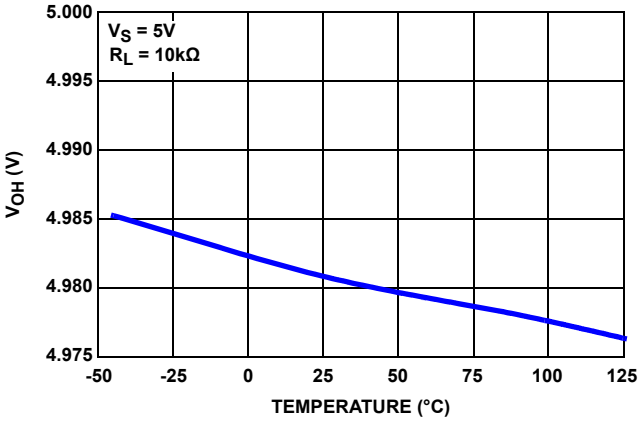

FIGURE 19. V_{OH} vs TEMPERATURE

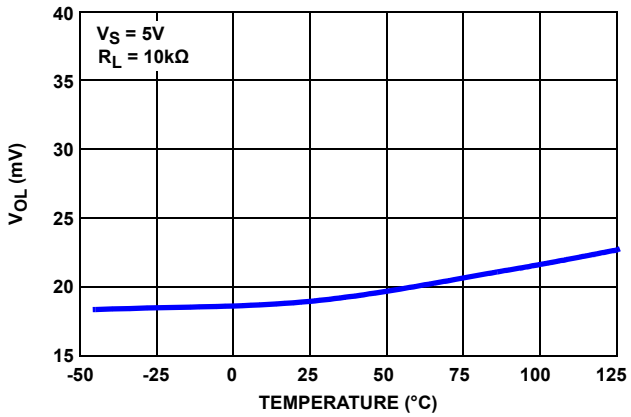

FIGURE 20. V_{OL} vs TEMPERATURE

Typical Performance Curves

V+ = 5V, V- = 0V, V_{CM} = 2.5V, R_L = Open, T = +25°C, unless otherwise specified.

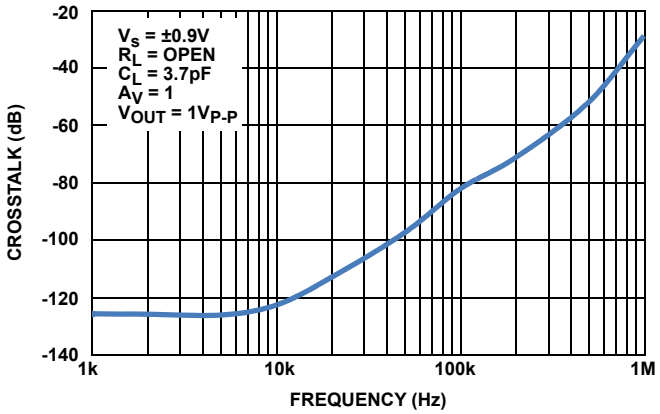

FIGURE 21. CROSSTALK vs FREQUENCY, V_S = ±0.9V

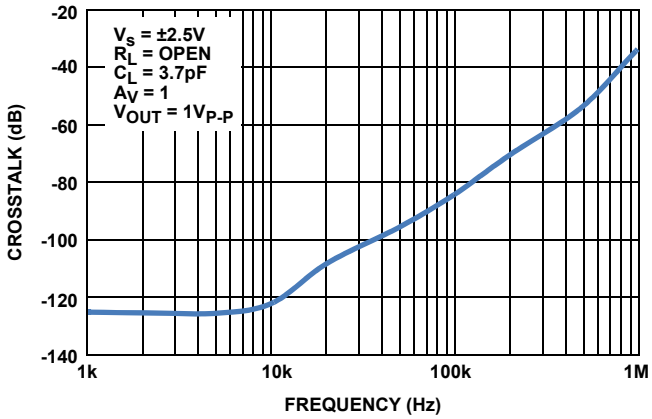

FIGURE 22. CROSSTALK vs FREQUENCY, V_S = ±2.5V

Applications Information

Functional Description

The ISL28130, ISL28230 and ISL28430 are low offset and low drift operational amplifiers with a very high open loop gain (150dB) and rail-to-rail input/output. They are designed to operate on a single supply range of 1.8V to 5.5V or a dual supply range of ±0.9V to ±2.75V while consuming only 20µA of supply current per channel. The ISL28130, ISL28230 and ISL28430 have a 400kHz gain-bandwidth.

The high open loop gain, low offset voltage, high bandwidth and low 1/f noise make the ISL28130, ISL28230 and ISL28430 ideal for precision applications.

Rail-to-rail Input and Output (RRIO)

The RRIO CMOS amplifier uses parallel input PMOS and NMOS that enable the inputs to swing 100mV beyond either supply rail. The inverting and non-inverting inputs do not have back-to-back input clamp diodes and are capable of maintaining high input impedance at high differential input voltages. This is effective in eliminating output distortion caused by high slew rate input signals.

The output stage uses common source connected PMOS and NMOS devices to achieve rail-to-rail output drive capability with 15mA current limit and the capability to swing to within 50mV of either rail while driving a 10kΩ load.

IN+ and IN- Protection

All input terminals have internal ESD protection diodes to both positive and negative supply rails, limiting the input voltage to within one diode beyond the supply rails. For applications in which either input is expected to exceed the rails by 0.5V, an external series resistor must be used to ensure the input currents never exceed 20mA (see Figure 23).

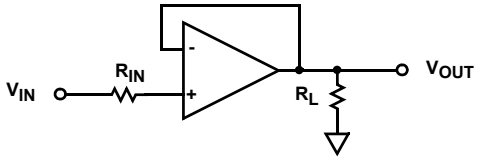

FIGURE 23. INPUT CURRENT LIMITING

Layout Guidelines for High Impedance Inputs

To achieve maximum performance from the high input impedance and low offset voltage of the ISL28130, ISL28230 and ISL28430 amplifiers, care should be taken in the circuit board layout. The PC board surface must remain clean and free of moisture to avoid leakage currents between adjacent traces. Surface coating of the circuit board reduces surface moisture and provides a humidity barrier, reducing parasitic resistance on the board.

High Gain, Precision DC-Coupled Amplifier

The circuit in Figure 24 implements a single-stage DC-coupled amplifier with an input DC sensitivity of under 100nV that is only possible using a low VOS amplifier with high open loop gain. High gain DC amplifiers operating from low voltage supplies are not practical using typical low offset precision op amps. For example, consider a typical precision amplifier in a gain of 10kV/V. A low offset op amp with ±100µV V_{OS} and 0.5µV/°C offset drift yields a DC error of >1V, with an additional 5mV/°C of temperature-dependent error. This amount of error makes it difficult to resolve DC input voltage changes in the mV range.

The ±40µV max V_{OS} and 150nV/°C temperature drift of the ISL28130, ISL28230, and ISL28430 produce a temperature-stable maximum DC output error of only ±400mV, with a maximum output temperature drift of 1.5mV/°C. The additional benefit of a very low 1/f noise corner frequency and some feedback filtering allows DC voltages and voltage fluctuations well below 10µV to be easily detected with a simple, single-stage amplifier.

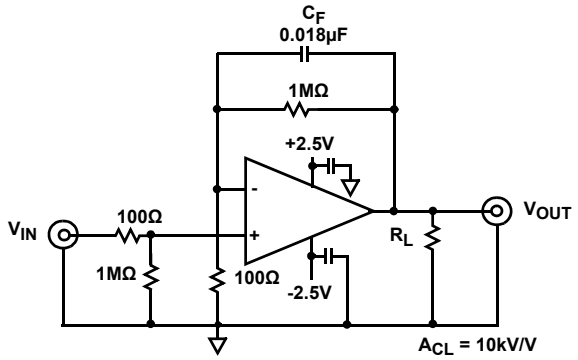

FIGURE 24. HIGH GAIN, PRECISION DC-COUPLED AMPLIFIER

Revision History

The revision history provided is for informational purposes only and is believed to be accurate, but not warranted. Please go to web to make sure you have the latest revision.

DATE	REVISION	CHANGE
February 13, 2014	FN7623.7	Ordering information table on page 2: Added part number ISL28230FRZ - Absolute Maximum Ratings table on page 5: changed Max Voltage VOUT to GND (10s) : from ±3.0V to: (V- - 0.5V) to (V+ + 0.5V)V..
November 22, 2013	FN7623.6	Removed “Coming Soon” from ISL28430FBZ in “Ordering Information” on page 2.
November 8, 2012	FN7623.5	Removed “Coming Soon” from ISL28130FHZ-T7, ISL28130FEZ-T7, ISL28130CBZ, ISL28130FBZ, ISL28230FUZ, ISL28230FRZ, ISL28430FVZ, ISL28230FRZ, ISL28130CBZ and ISL28130FBZ in “Ordering Information” on page 2.
February 10, 2012	FN7623.4	Removed “Coming Soon” from ISL28230FBZ in “Ordering Information” on page 2.
June 13, 2011	FN7623.3	• Changed minimum operating supply voltage from +1.65V to +1.8V throughout datasheet. Modified Electrical Specifications table, beginning on page 5, for all specs related at +1.65V to +1.8V, and all other text references accordingly. • On page 1, paragraph 2, last sentence: changed from “All devices operate over the temperature range of -40°C to +125°C.” to “Commercial temp range devices operate over the temperature range of 0°C to 70°C. Full temp range devices operate over the temperature range of -40°C to 125°C.” • On page 2, Ordering Information: added “Coming Soon” to all devices with -40°C to 125°C temp range and to ISL28130CBZ at 0°C to +70°C temp range.
March 1, 2011	FN7623.2	-Ordering Information Table: Removed all 'Coming Soon' under part numbers (except for ISL28130FBZ and ISL28230FRZ), added part markings for all 125°C grade parts. Added new data column called 'TEMPERATURE GRADE' to distinguish between 'Commercial' and 'Full' temp grades. - Electrical Specifications Table: added new text to common conditions: “Boldface limits apply over the entire operating temperature range”. This note allows bold face limits to apply both to commercial and full grade temp devices. - Added over temperature 0°C to 70°C spec for Vos in addition to -40°C to 125°C Vos spec. Original Vos spec of 46.8µV for -40°C to 125°C is a typo based on a TCVos of 150nV/C. -40°C to 125°C limit corrected as 55µV over temp.
December 7, 2010	FN7623.1	Corrected Thermals for DFN package in “Tja from 125 to 53, “Tjc from 90 to 12”
December 3, 2010		Removed Part Markings from Full temp grade parts and changed to TBD until availability is validated.
December 2, 2010		-Updated front page text to add DFN packaging and extended temp range -40°C to +125°C -Removed previous Ib vs Temp plot and added new -40°C to +125°C Ib vs Temp plot on front page. -Updated ordering information table by adding a full temp range option to all parts and temp range column. Also added in DFN part to ordering table. All full temp parts are stamped Coming Soon. -Added DFN package to Pin Configurations table. -Added -40°C to +125°C temp range under Operating Conditions page 5. -Added the testing standards performance information to the ESD ratings in Abs Max Table -Added new Input Bias Current Ib spec of 700pA MIN/MAX in Electrical Spec table for -40°C to +125°C temp range -Revised Note 10 for Electrical Spec table as: “Compliance to datasheet limits is assured by one or more methods: production test, characterization and/or design.” -Updated all curves in the datasheet with 0°C to +70°C temp range to -40°C to +125°C temp range. -Added DFN package L8.3x3J outline drawing to the end of datasheet.
October 19, 2010		On page 6 changed “Supply Current, Per Amplifier” from a typical of 18µA to 20µA to comply with front page.
August 17, 2010	FN7623.0	Initial Release

About Intersil

Intersil Corporation is a leader in the design and manufacture of high-performance analog, mixed-signal and power management semiconductors. The company's products address some of the largest markets within the industrial and infrastructure, personal computing and high-end consumer markets. For more information about Intersil, visit our website at www.intersil.com.

For the most updated datasheet, application notes, related documentation and related parts, please see the respective product information page found at www.intersil.com. You may report errors or suggestions for improving this datasheet by visiting www.intersil.com/en/support/ask-an-expert.html. Reliability reports are also available from our website at http://www.intersil.com/en/support/qualandreliability.html#reliability

Small Outline Transistor Plastic Packages (SC70-5)

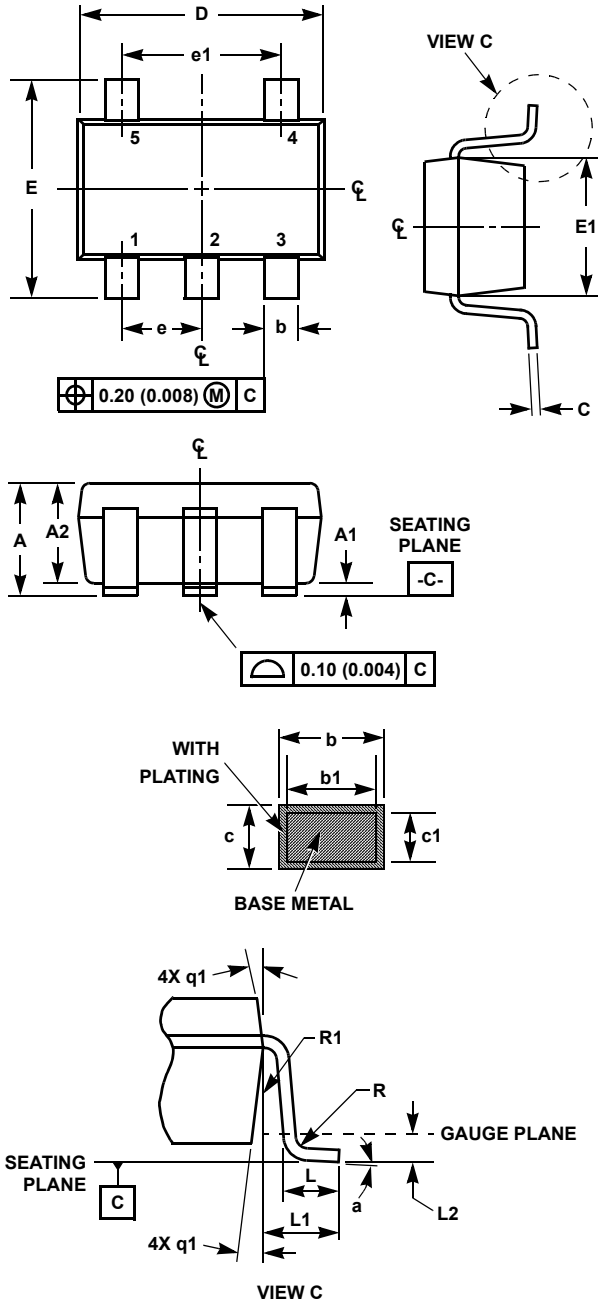

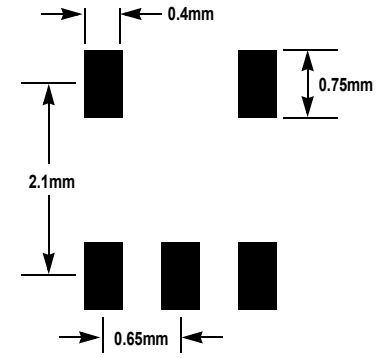

TYPICAL RECOMMENDED LAND PATTERN

P5.049

5 LEAD SMALL OUTLINE TRANSISTOR PLASTIC PACKAGE

SYMBOL	INCHES		MILLIMETERS		NOTES
	MIN	MAX	MIN	MAX	
A	0.031	0.043	0.80	1.10	-
A1	0.000	0.004	0.00	0.10	-
A2	0.031	0.039	0.80	1.00	-
b	0.006	0.012	0.15	0.30	-
b1	0.006	0.010	0.15	0.25	
c	0.003	0.009	0.08	0.22	6
c1	0.003	0.009	0.08	0.20	6
D	0.073	0.085	1.85	2.15	3
E	0.071	0.094	1.80	2.40	-
E1	0.045	0.053	1.15	1.35	3
e	0.0256 Ref		0.65 Ref		-
e1	0.0512 Ref		1.30 Ref		-
L	0.010	0.018	0.26	0.46	4
L1	0.017 Ref.		0.420 Ref.		-
L2	0.006 BSC		0.15 BSC		
α	0°	8°	0°	8°	-
N	5		5		5
R	0.004	-	0.10	-	
R1	0.004	0.010	0.15	0.25	

Rev. 3 7/07

NOTES:

1. Dimensioning and tolerances per ASME Y14.5M-1994.
2. Package conforms to EIAJ SC70 and JEDEC MO-203AA.
3. Dimensions D and E1 are exclusive of mold flash, protrusions, or gate burrs.
4. Footlength L measured at reference to gauge plane.
5. “N” is the number of terminal positions.
6. These Dimensions apply to the flat section of the lead between 0.08mm and 0.15mm from the lead tip.
7. Controlling dimension: MILLIMETER. Converted inch dimensions are for reference only.

Package Outline Drawing

P5.064A

5 LEAD SMALL OUTLINE TRANSISTOR PLASTIC PACKAGE
Rev 0, 2/10

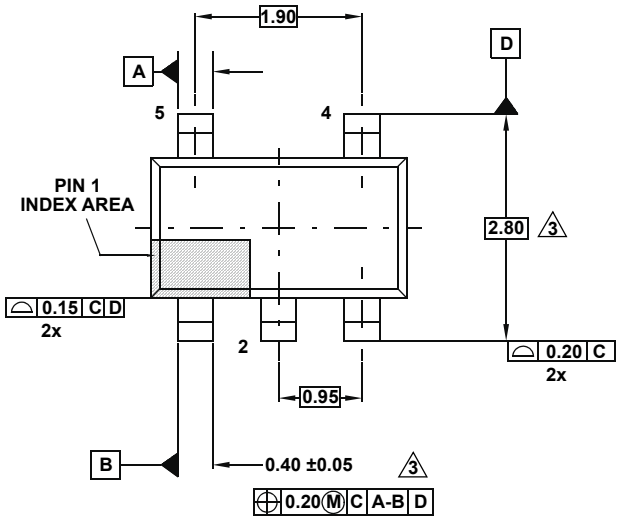

TOP VIEW

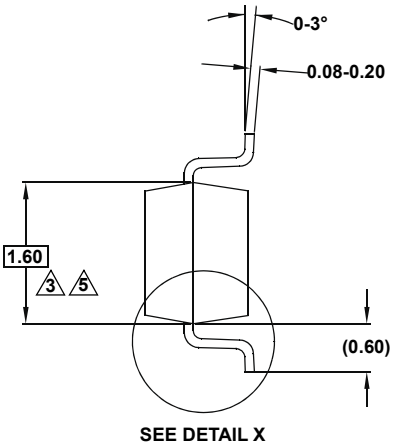

END VIEW

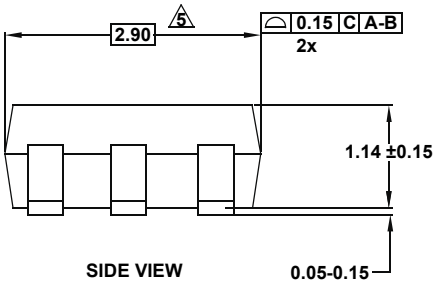

SIDE VIEW

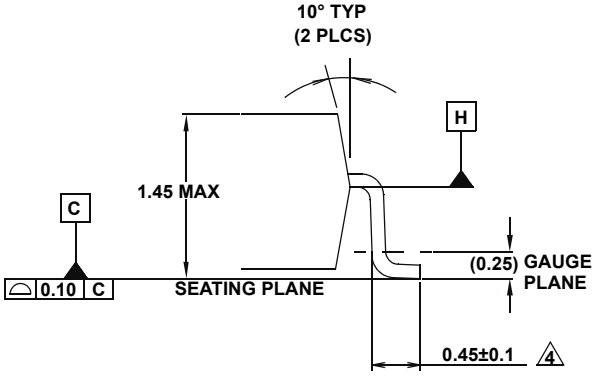

DETAIL "X"

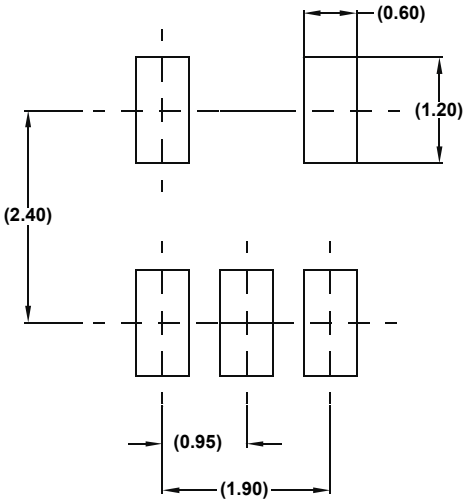

TYPICAL RECOMMENDED LAND PATTERN

NOTES:

1. Dimensions are in millimeters.
   Dimensions in ( ) for Reference Only.
2. Dimensioning and tolerancing conform to ASME Y14.5M-1994.
3. Dimension is exclusive of mold flash, protrusions or gate burrs.
4. Foot length is measured at reference to guage plane.
5. This dimension is measured at Datum “H”.
6. Package conforms to JEDEC MO-178AA.

Package Outline Drawing

M8.118A

8 LEAD MINI SMALL OUTLINE PLASTIC PACKAGE (MSOP)

Rev 0, 9/09

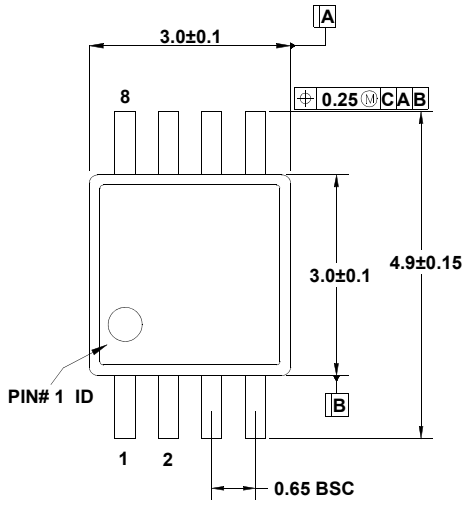

TOP VIEW

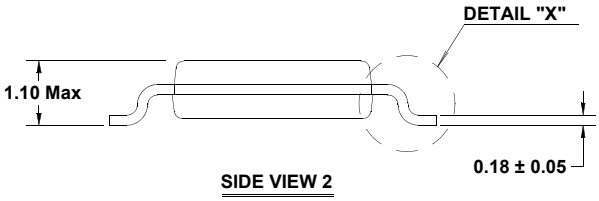

SIDE VIEW 2

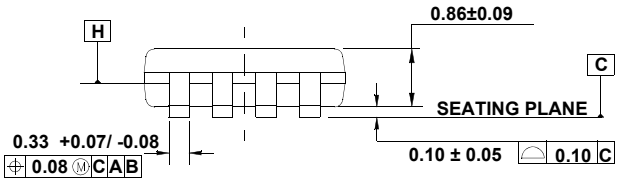

SIDE VIEW 1

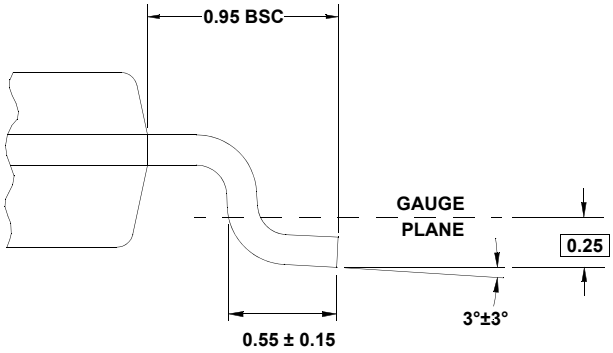

DETAIL "X"

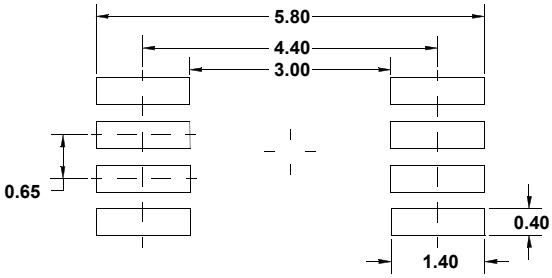

TYPICAL RECOMMENDED LAND PATTERN

NOTES:

1. Dimensions are in millimeters.
2. Dimensioning and tolerancing conform to JEDEC MO-187-AA and AMSE Y14.5m-1994.
3. Plastic or metal protrusions of 0.15mm max per side are not included.
4. Plastic interlead protrusions of 0.25mm max per side are not included.
5. Dimensions “D” and “E1” are measured at Datum Plane “H”.
6. This replaces existing drawing # MDP0043 MSOP 8L.

Thin Shrink Small Outline Package Family (TSSOP)

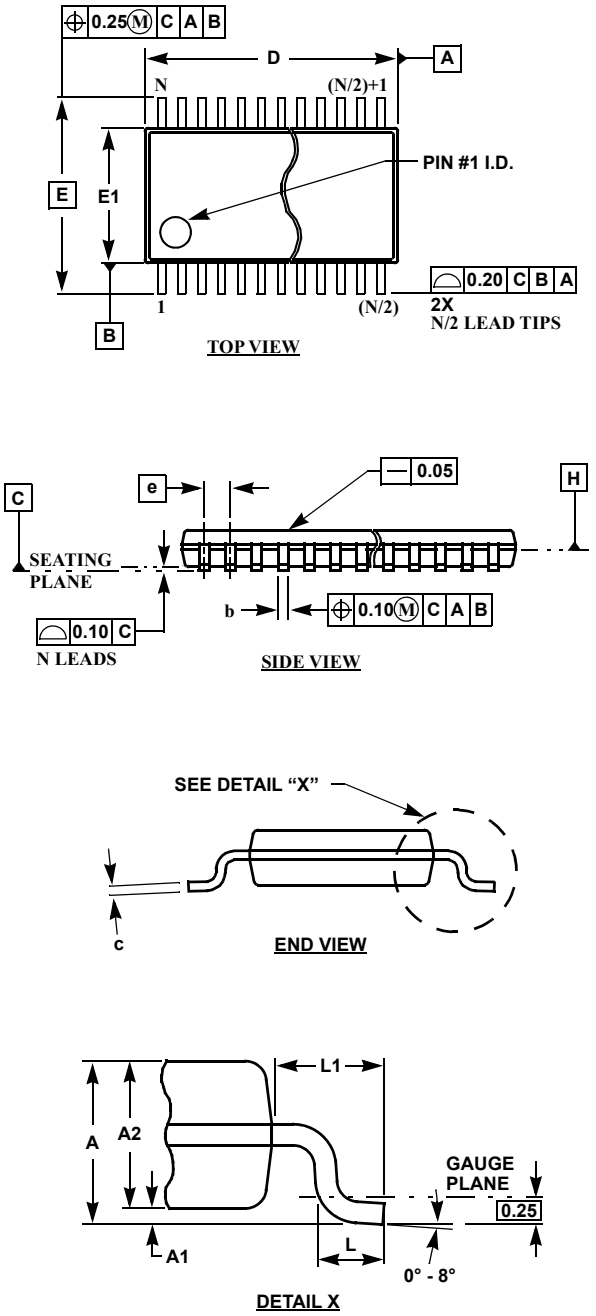

MDP0044

THIN SHRINK SMALL OUTLINE PACKAGE FAMILY

SYMBOL	MILLIMETERS					TOLERANCE
	14 LD	16 LD	20 LD	24 LD	28 LD	
A	1.20	1.20	1.20	1.20	1.20	Max
A1	0.10	0.10	0.10	0.10	0.10	±0.05
A2	0.90	0.90	0.90	0.90	0.90	±0.05
b	0.25	0.25	0.25	0.25	0.25	+0.05/-0.06
c	0.15	0.15	0.15	0.15	0.15	+0.05/-0.06
D	5.00	5.00	6.50	7.80	9.70	±0.10
E	6.40	6.40	6.40	6.40	6.40	Basic
E1	4.40	4.40	4.40	4.40	4.40	±0.10
e	0.65	0.65	0.65	0.65	0.65	Basic
L	0.60	0.60	0.60	0.60	0.60	±0.15
L1	1.00	1.00	1.00	1.00	1.00	Reference

Rev. F 2/07

NOTES:

1. Dimension "D" does not include mold flash, protrusions or gate burrs. Mold flash, protrusions or gate burrs shall not exceed 0.15mm per side.
2. Dimension "E1" does not include interlead flash or protrusions. Interlead flash and protrusions shall not exceed 0.25mm per side.
3. Dimensions "D" and "E1" are measured at dAtum Plane H.
4. Dimensioning and tolerancing per ASME Y14.5M-1994.

Small Outline Package Family (SO)

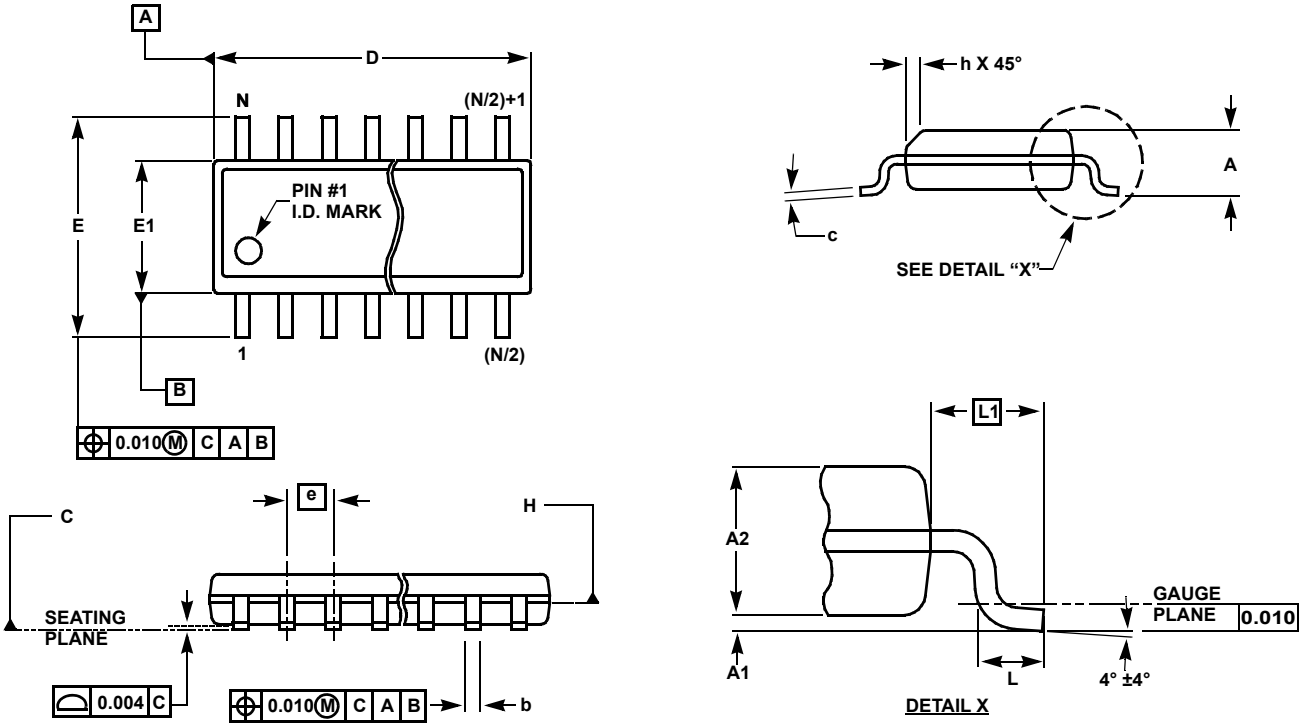

MDP0027

SMALL OUTLINE PACKAGE FAMILY (SO)

SYMBOL	INCHES							TOLERANCE	NOTES
	SO-8	SO-14	SO16 (0.150")	SO16 (0.300") (SOL-16)	SO20 (SOL-20)	SO24 (SOL-24)	SO28 (SOL-28)		
A	0.068	0.068	0.068	0.104	0.104	0.104	0.104	MAX	-
A1	0.006	0.006	0.006	0.007	0.007	0.007	0.007	±0.003	-
A2	0.057	0.057	0.057	0.092	0.092	0.092	0.092	±0.002	-
b	0.017	0.017	0.017	0.017	0.017	0.017	0.017	±0.003	-
c	0.009	0.009	0.009	0.011	0.011	0.011	0.011	±0.001	-
D	0.193	0.341	0.390	0.406	0.504	0.606	0.704	±0.004	1, 3
E	0.236	0.236	0.236	0.406	0.406	0.406	0.406	±0.008	-
E1	0.154	0.154	0.154	0.295	0.295	0.295	0.295	±0.004	2, 3
e	0.050	0.050	0.050	0.050	0.050	0.050	0.050	Basic	-
L	0.025	0.025	0.025	0.030	0.030	0.030	0.030	±0.009	-
L1	0.041	0.041	0.041	0.056	0.056	0.056	0.056	Basic	-
h	0.013	0.013	0.013	0.020	0.020	0.020	0.020	Reference	-
N	8	14	16	16	20	24	28	Reference	-

Rev. M 2/07

NOTES:

1. Plastic or metal protrusions of 0.006" maximum per side are not included.
2. Plastic interlead protrusions of 0.010" maximum per side are not included.
3. Dimensions "D" and "E1" are measured at Datum Plane "H".
4. Dimensioning and tolerancing per ASME Y14.5M-1994

Package Outline Drawing

M8.15E

8 LEAD NARROW BODY SMALL OUTLINE PLASTIC PACKAGE

Rev 0, 08/09

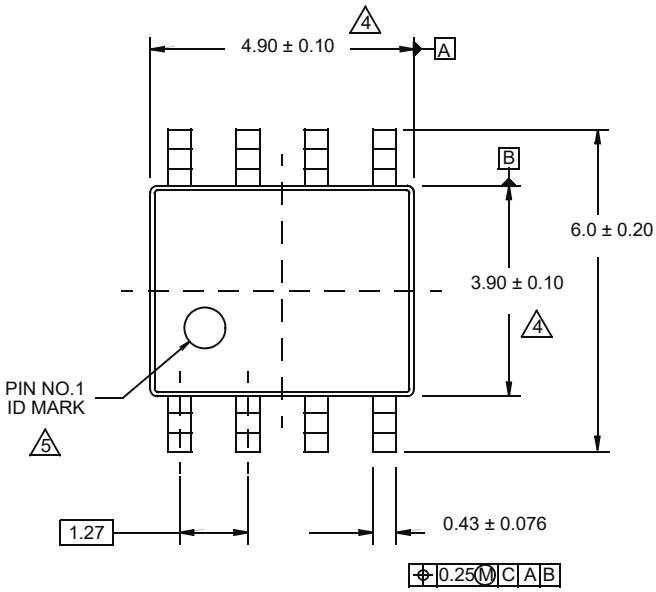

TOP VIEW

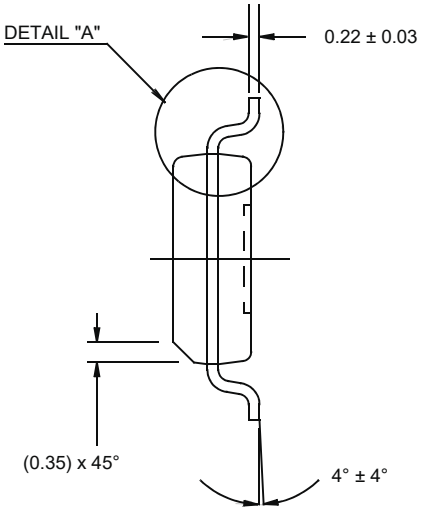

SIDE VIEW “B”

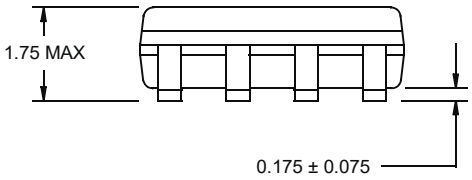

SIDE VIEW “A

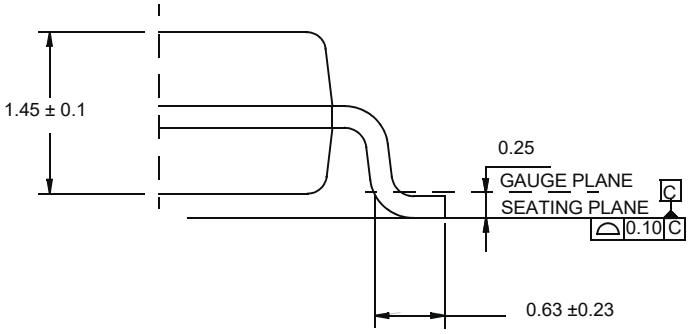

DETAIL "A"

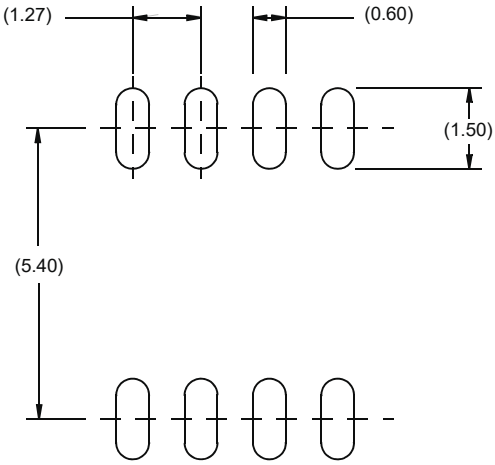

TYPICAL RECOMMENDED LAND PATTERN

NOTES:

1. Dimensions are in millimeters.
   Dimensions in ( ) for Reference Only.
2. Dimensioning and tolerancing conform to AMSE Y14.5m-1994.
3. Unless otherwise specified, tolerance : Decimal ± 0.05
4. Dimension does not include interlead flash or protrusions.
   Interlead flash or protrusions shall not exceed 0.25mm per side.
5. The pin #1 identifier may be either a mold or mark feature.
6. Reference to JEDEC MS-012.

Package Outline Drawing
L8.3x3J
8 LEAD DUAL FLAT NO-LEAD PLASTIC PACKAGE
Rev 0 9/09

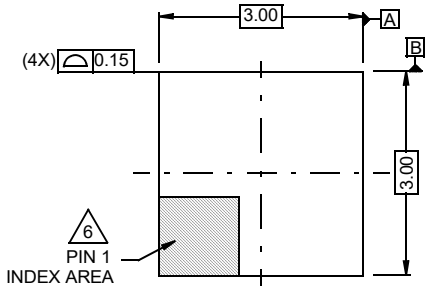

TOP VIEW

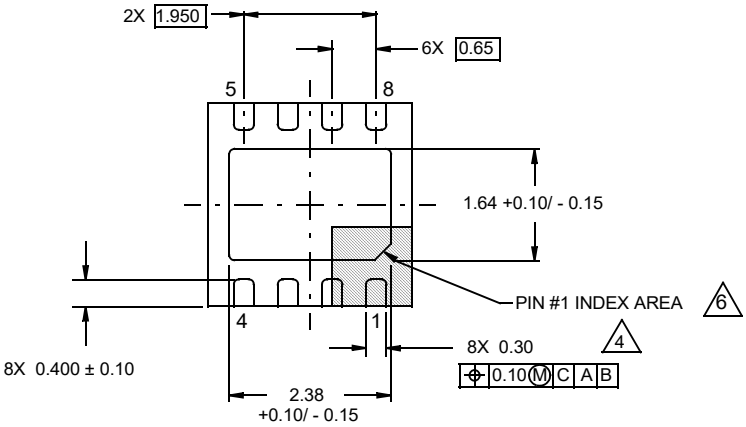

BOTTOM VIEW

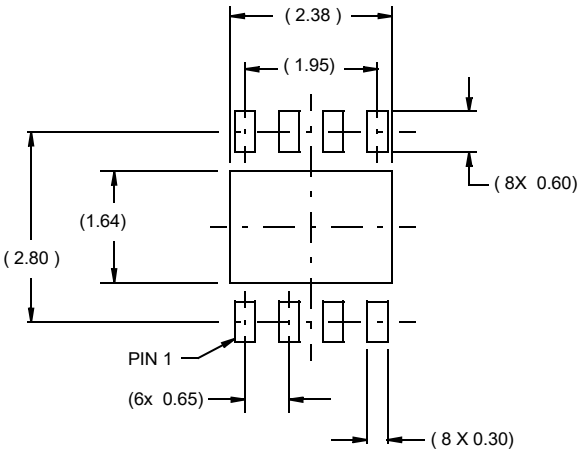

TYPICAL RECOMMENDED LAND PATTERN

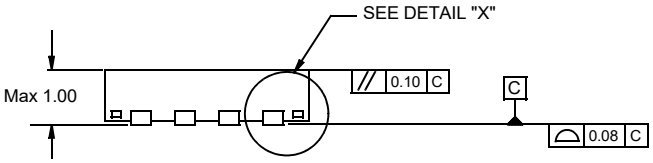

SIDE VIEW

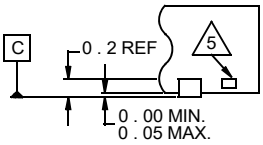

DETAIL "X"

NOTES:

1. Dimensions are in millimeters.
   Dimensions in ( ) for Reference Only.
2. Dimensioning and tolerancing conform to AMSE Y14.5m-1994.
3. Unless otherwise specified, tolerance : Decimal ± 0.05
4. Dimension applies to the metallized terminal and is measured between 0.15mm and 0.30mm from the terminal tip.
5. Tiebar shown (if present) is a non-functional feature.
6. The configuration of the pin #1 identifier is optional, but must be located within the zone indicated. The pin #1 identifier may be either a mold or mark feature.

IMPORTANT NOTICE AND DISCLAIMER

RENESAS ELECTRONICS CORPORATION AND ITS SUBSIDIARIES (“RENESAS”) PROVIDES TECHNICAL SPECIFICATIONS AND RELIABILITY DATA (INCLUDING DATASHEETS), DESIGN RESOURCES (INCLUDING REFERENCE DESIGNS), APPLICATION OR OTHER DESIGN ADVICE, WEB TOOLS, SAFETY INFORMATION, AND OTHER RESOURCES “AS IS” AND WITH ALL FAULTS, AND DISCLAIMS ALL WARRANTIES, EXPRESS OR IMPLIED, INCLUDING, WITHOUT LIMITATION, ANY IMPLIED WARRANTIES OF MERCHANTABILITY, FITNESS FOR A PARTICULAR PURPOSE, OR NON-INFRINGEMENT OF THIRD PARTY INTELLECTUAL PROPERTY RIGHTS.

These resources are intended for developers skilled in the art designing with Renesas products. You are solely responsible for (1) selecting the appropriate products for your application, (2) designing, validating, and testing your application, and (3) ensuring your application meets applicable standards, and any other safety, security, or other requirements. These resources are subject to change without notice. Renesas grants you permission to use these resources only for development of an application that uses Renesas products. Other reproduction or use of these resources is strictly prohibited. No license is granted to any other Renesas intellectual property or to any third party intellectual property. Renesas disclaims responsibility for, and you will fully indemnify Renesas and its representatives against, any claims, damages, costs, losses, or liabilities arising out of your use of these resources. Renesas' products are provided only subject to Renesas' Terms and Conditions of Sale or other applicable terms agreed to in writing. No use of any Renesas resources expands or otherwise alters any applicable warranties or warranty disclaimers for these products.

(Rev.1.0 Mar 2020)

Corporate Headquarters

TOYOSU FORESIA, 3-2-24 Toyosu,
Koto-ku, Tokyo 135-0061, Japan
www.renesas.com

Contact Information

For further information on a product, technology, the most up-to-date version of a document, or your nearest sales office, please visit:
www.renesas.com/contact/

Trademarks

Renesas and the Renesas logo are trademarks of Renesas Electronics Corporation. All trademarks and registered trademarks are the property of their respective owners.

© 2020 Renesas Electronics Corporation. All rights reserved.

Mouser Electronics

Authorized Distributor

Click to View Pricing, Inventory, Delivery & Lifecycle Information:

Renesas Electronics:

ISL28130CEZ-T7 ISL28130CEZ-T7A ISL28130CHZ-T7 ISL28130CHZ-T7A ISL28230CBZ ISL28230CBZ-T7 ISL28230CBZ-T7A ISL28230CRZ ISL28230CRZ-T13 ISL28230CRZ-T7 ISL28230CRZ-T7A ISL28230CUZ ISL28230CUZ-T7 ISL28230CUZ-T7A ISL28430CBZ ISL28430CBZ-T7 ISL28430CBZ-T7A ISL28430CVZ ISL28430CVZ-T13 ISL28430CVZ-T7A ISL28230FBZ-T7A ISL28230FBZ-T13 ISL28230FBZ-T7 ISL28230FBZ ISL28130FEZ-T7 ISL28130FEZ-T7A ISL28230FUZ ISL28230FUZ-T7 ISL28230FUZ-T7A ISL28430FVZ-T13 ISL28430FVZ-T7 ISL28430FVZ-T7A ISL28130FHZ-T7 ISL28130FHZ-T7A ISL28230FRZ-T7 ISL28430FVZ ISL28230FRZ-T13 ISL28230FRZ-T7A ISL28230FRZ ISL28430FBZ ISL28430FBZ-T13 ISL28430FBZ-T7