REV	CONTENT	CHK	DATE
V0.0	CONTENT	ZCL	24.09.09

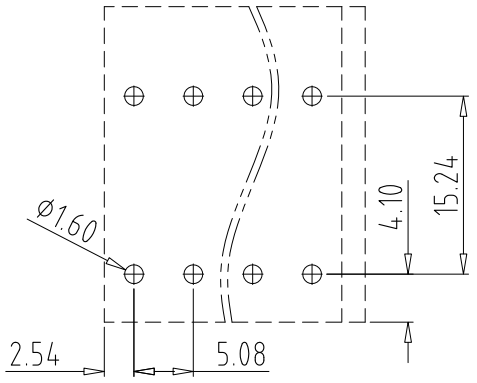

PCB LAYOUT

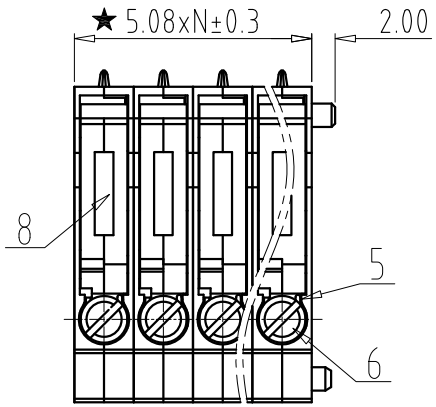

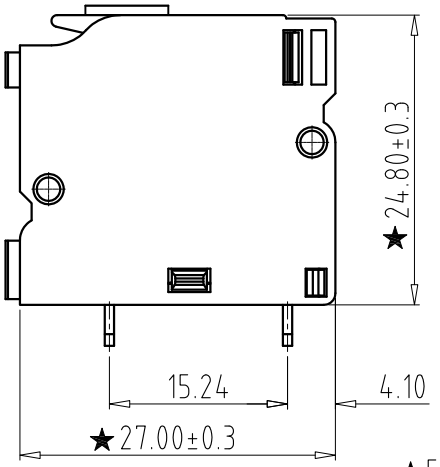

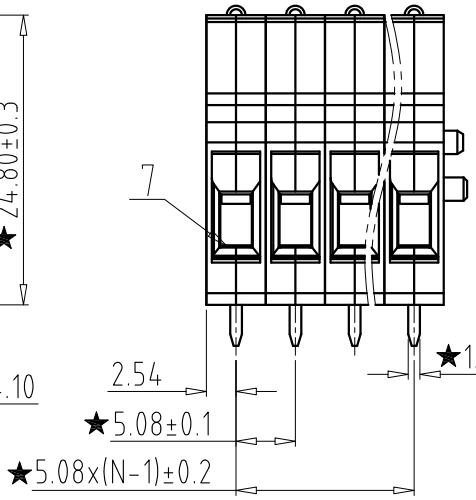

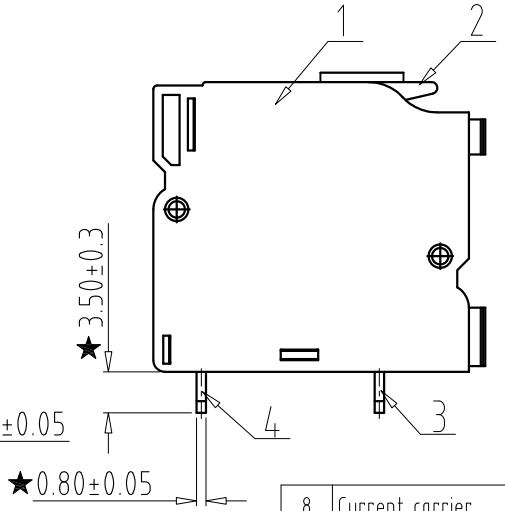

Electrical :

	UL	IEC
1.Rated Voltage :	300V	320V
2.Rated Current :	15A	15A
3.Wire Range:	24-12AWG	0.2-4mm^2

4.Operating Temperature : -40°C~+105°C

5.RoHS Compliance

6."★" is the key quality control point

GSMT2.5 - 5.08 -XXP - X X - 00

① ② ③ ④ ⑤ ⑥

① Sereies NO.

② Pitch

③ Poles
- 02 02Contacts
- 03 03Contacts
- ...
- 24 24Contacts

④ 1 Single Pitch
2 Double Pitch

⑤ Color: 1 Grey, 2 Blue, 3 Black, 4 Green, 5 Orange, 6 Red, 7 Transparent, 8 Yellow, 9 White

⑥ Customer Request: 00--Standard

ITEM	NAME OF PART	NO. OF PART	Q"TY	MATERIAL	NOTE
8	Current carrier	XX	P	Copper alloy	Tin Plated
7	Cage	XX	P	Copper alloy	M3/Ni Plated
6	Screw	XX	P	Copper alloy	M3/Tin Plated
5	Spring	XX	P	Copper alloy	Ni Plated
4	Contacts 2	XX	P	Copper alloy	Tin Plated
3	Contacts 1	XX	P	Copper alloy	Tin Plated
2	Housing 2	XX	P	PA66 UL94V-0	SEE NOTE
1	Housing 1	XX	P	PA66 UL94V-0	SEE NOTE

DWG.	ZCL	DATE	24.09.09	SIZE	A4 UNITS mm SHEET/OF 1 / 1
CHK.		DATE		SCALE	1:1
APP.		DATE		NAME	GSMT2.5-5.08-XXP-XX-00
				DWGNO.	XXXX

Golten 宁波冠泰电子有限公司 NINGBO GOLTEN ELECTRONICS CO., LTD.

Total Pitch Tolerances in mm									Nominal dimension range in mm									⊥		≒	—		//
over 0 to 30	over 30 to 53	over 53 to 70	over 70 to 90	over 90 to 115	over 115 to 150	over 150 to 250	over 250 to 350	over 350 to 500	over 0 to 30	over 30 to 53	over 53 to 70	over 70 to 90	over 90 to 115	over 115 to 150	over 150 to 200	over 200 to 250	over 250 to 320	over 0 to 10	over 10	all	over 0 to 100	over 100 to 150	over 150
±0.18	±0.20	±0.25	±0.3	±0.35	±0.44	±0.60	±0.70	±0.85	±0.20	±0.25	±0.30	±0.35	±0.44	±0.55	±0.70	±0.80	±0.90	0.2	0.3	0.3	0.2	0.3	0.5