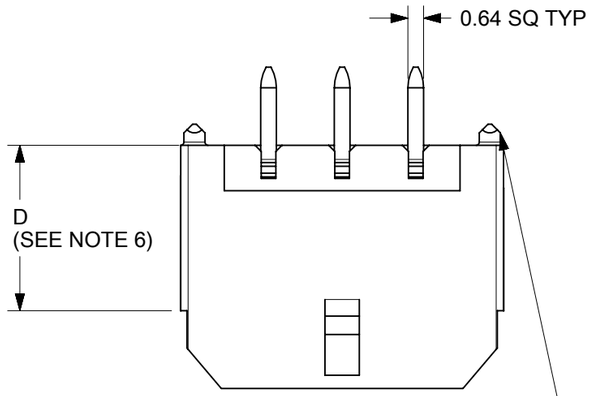

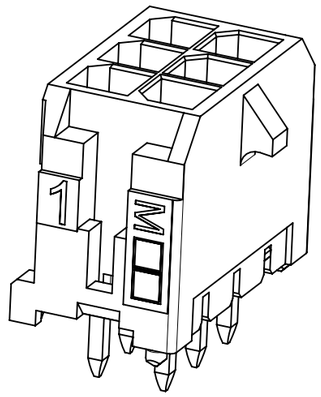

NOTE : (2) POLARIZATION PEGS ARE SHOWN HOWEVER, ASSEMBLES MAY BE MANUFACTURED WITH (1) PEG ONLY

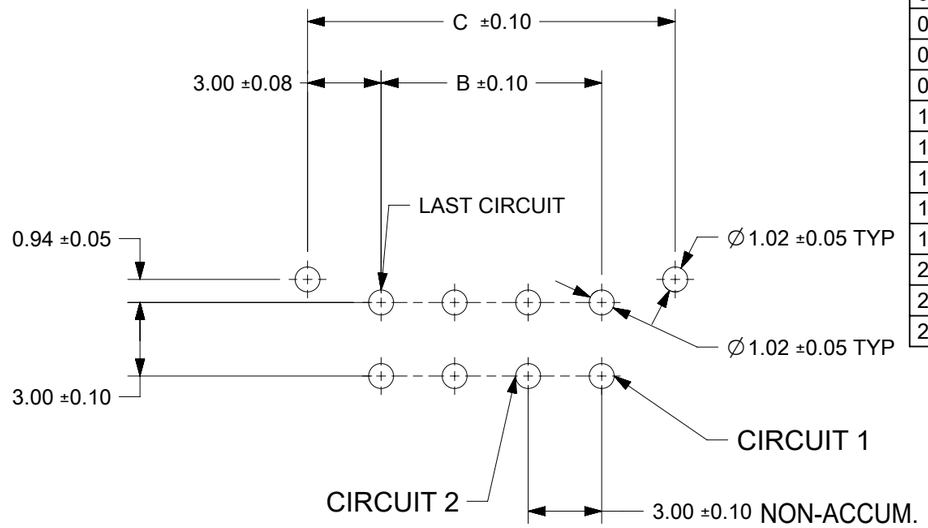

CKT	A	B	C
02	6.65	NA	6.00
04	9.65	3.00	9.00
06	12.65	6.00	12.00
08	15.65	9.00	15.00
10	18.65	12.00	18.00
12	21.65	15.00	21.00
14	24.65	18.00	24.00
16	27.65	21.00	27.00
18	30.65	24.00	30.00
20	33.65	27.00	33.00
22	36.65	30.00	36.00
24	39.65	33.00	39.00

PCB LAYOUT: COMPONENT SIDE

RECOMMEND PCB THICKNESS: 1.57

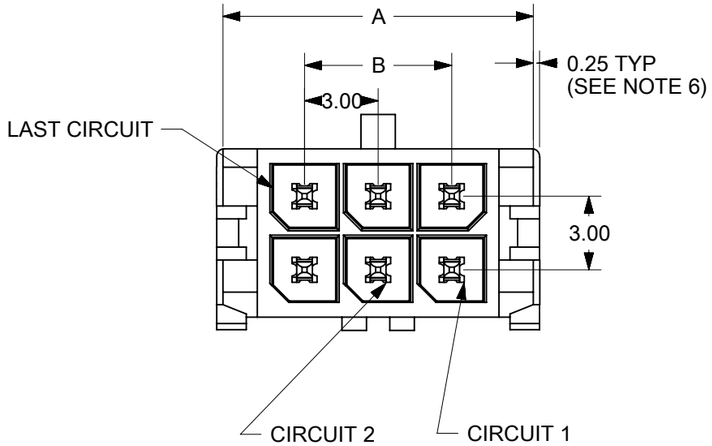

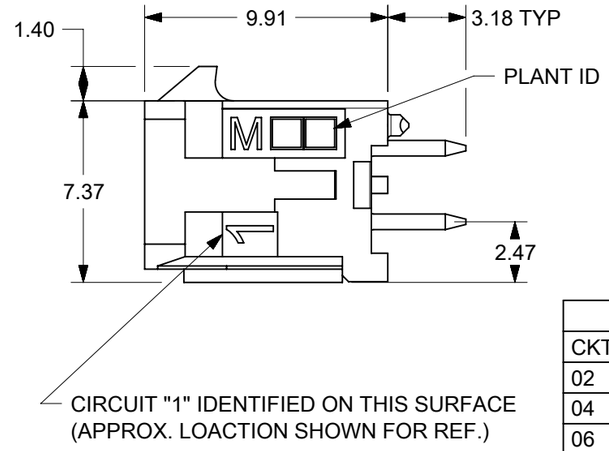

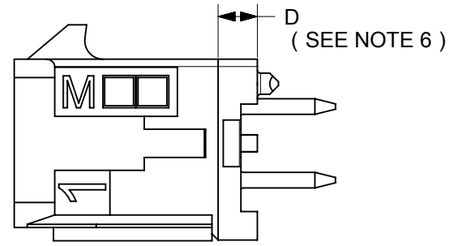

CIRCUIT SIZE 8-24

	FINISH A		FINISH B		FINISH C		FINISH D
CKT	MATERIAL NO :	CKT	MATERIAL NO :	CKT	MATERIAL NO :	CKT	MATERIAL NO :
02	43045-0227	02	43045-0228	02	43045-0229	02	43045-0298
04	43045-0427	04	43045-0428	04	43045-0429	04	43045-0498
06	43045-0627	06	43045-0628	06	43045-0629	06	43045-0698
08	43045-0827	08	43045-0828	08	43045-0829	08	43045-0898
10	43045-1027	10	43045-1028	10	43045-1029	10	43045-1098
12	43045-1227	12	43045-1228	12	43045-1229	12	43045-1298
14	43045-1427	14	43045-1428	14	43045-1429	14	43045-1498
16	43045-1627	16	43045-1628	16	43045-1629	16	43045-1698
18	43045-1827	18	43045-1828	18	43045-1829	18	43045-1898
20	43045-2027	20	43045-2028	20	43045-2029	20	43045-2098
22	43045-2227	22	43045-2228	22	43045-2229	22	43045-2298
24	43045-2427	24	43045-2428	24	43045-2429	24	43045-2498

NOTES;

1. HOUSING MATERIAL: GLASS FILLED LIQUID CRYSTAL POLYMER, UL94V-0, COLOR-BLACK
   TERMINAL MATERIAL: BRASS ALLOY
2. FINISH: A = .000060/(0.00152) MIN. REFLOWED MATTE TIN OVER
   .000050/(0.00127) MIN. NICKEL PLATE.
   (FINISH IS BRIGHT IN APPEARANCE, THICKNESS AS APPLIED PRIOR TO REFLOW)
   B = .000015/(0.00038) MIN. SELECT GOLD IN CONTACT AREA;
   .000100/(0.00254) MIN. SELECT MATTE TIN ON SOLDER TAILS;
   BOTH OVER .000050/(0.00127) MIN. NICKEL PLATE.
   C = .000030/(0.00076) MIN. SELECT GOLD IN CONTACT AREA;
   .000100/(0.00254) MIN. SELECT MATTE TIN ON SOLDER TAILS;
   BOTH OVER .000050/(0.00127) MIN. NICKEL PLATE.
   D = .000100/(0.00254) MIN. MATTE TIN OVER
   .000050/(0.00127) MIN. NICKEL PLATE.
3. PRODUCT SPECIFICATION: PS-43045
4. TRAY PACKAGED: SEE MOLEX DRAWING PK-70873-0314
5. MATES WITH MICRO FIT (3.0) RECEPTACLE SERIES 43025
6. CIRCUIT SIZES 2-6: "D" IS .265/6.74 FOR .010/0.25 STEP
   CIRCUIT SIZES 8-24: "D" IS .063/1.60 FOR .010/0.25 STEP.
7. THIS PART CONFORMS TO CLASS B REQUIREMENTS OF COSMETIC SPECIFICATION PS-45499-002.

THIS DRAWING CONTAINS INFORMATION THAT IS PROPRIETARY TO MOLEX ELECTRONIC TECHNOLOGIES, LLC AND SHOULD NOT BE USED WITHOUT WRITTEN PERMISSION

FUNCTIONAL SYMBOLS: F/A = 0; F/C = 0; F/P = 0

DIVISIONAL SYMBOLS

DIMENSION UNITS: mm — SCALE: 4:1

GENERAL TOLERANCES (UNLESS SPECIFIED)

ANGULAR TOL	±	0.5 °
4 PLACES	±	
3 PLACES	±	
2 PLACES	±	0.25
1 PLACE	±	0.36
0 PLACES	±	

DRAFT WHERE APPLICABLE MUST REMAIN WITHIN DIMENSIONS

CURRENT REV DESC:

EC NO: 773411
DRWN: ZIXUAQ 2024/01/03
CHK'D: XQZHANG 2024/01/08
APPR: XQZHANG 2024/01/08

INITIAL REVISION:
DRWN: KSAMIEC 2000/03/15
APPR: REDGLEY 2000/12/07

THIRD ANGLE PROJECTION

DRAWING: A3-SIZE — SERIES: 43045

molex

MICRO FIT (3.0)
DUAL ROW VERTICAL THRU HOLE HEADER ASS'Y

PRODUCT CUSTOMER DRAWING

DOCUMENT NUMBER	DOC TYPE	DOC PART	REVISION
SD-43045-010	PSD	001	G3

MATERIAL NUMBER	CUSTOMER	SHEET NUMBER
SEE CHART	GENERAL MARKET	1 OF 1

DOCUMENT STATUS	P1	RELEASE DATE	2024/01/08 15:05:58

FORMAT: master-mf-a3
REVISION: J1
DATE: 2021/05/06