	REV	CONTENT	CHK	DATE
0	V0.0	CONTENT	ZML	25.04.16

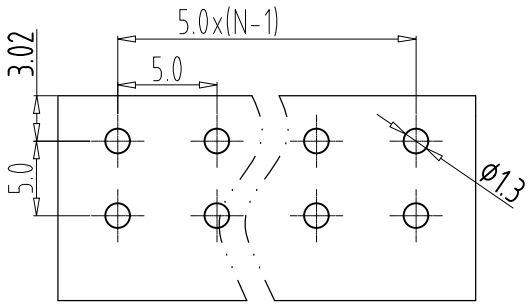

PCB LAYOUT

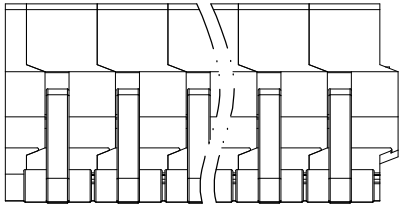

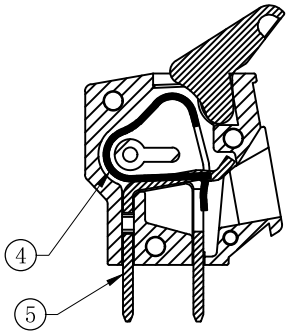

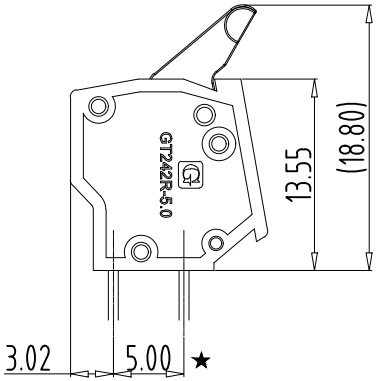

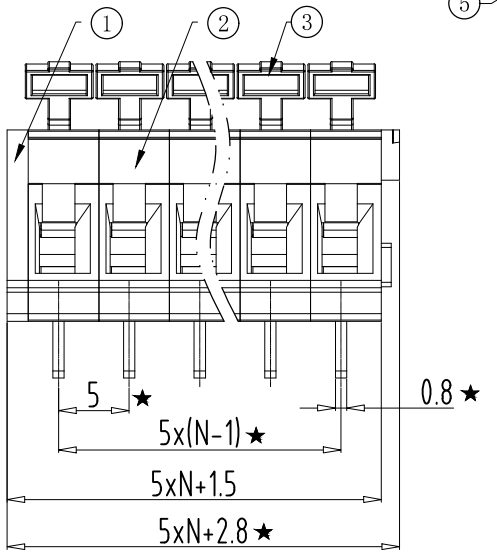

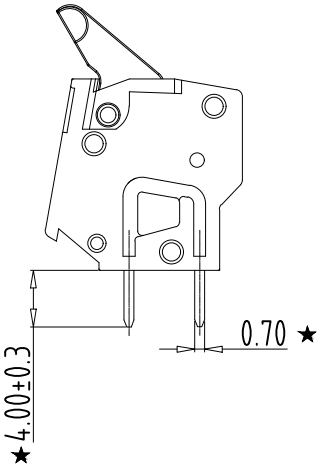

Electrical :

	UL	IEC
1.Rated Voltage :	300V	450V
2.Rated Current :	15A	17A
3.Wire Range:	28--12AWG	0.2--2.5mm²

4.Stripping Length : 5-6mm

5.Withstanding Voltage : AC: 2500V/1Min.

6.Operating Temperature : -40°C~+105°C

7.RoHS Compliance

8.Safty Approval : --

9." ★ " is the key quality control point

GT242R - 5.0 - XXP - X X - 00

① ② ③ ④ ⑤ ⑥

① Sereies No.

② 1 Pitch

③ poles
02 02Contacts
04 04Contacts
...
32 32Contacts

④ 1.Single Pitch
2.Doubie Pitch

⑤ Color:
1 Grey
2 Blue
3 Black
4 Green
5 Orange
6 Red
7 Transparent
8 Yellow
9 White

⑥ Customer Reques:00--Standard

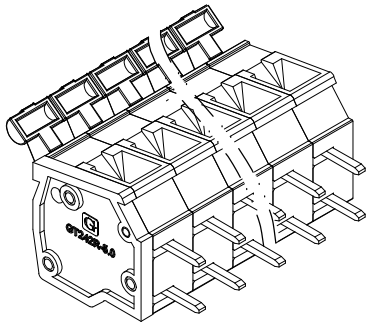

Total Pitch Tolerances in mm									Nominal dimension range in mm									⊥		÷	—		//
over 0 to 30	over 30 to 53	over 53 to 70	over 70 to 90	over 90 to 115	over 115 to 150	over 150 to 250	over 250 to 350	over 350 to 500	over 0 to 30	over 30 to 53	over 53 to 70	over 70 to 90	over 90 to 115	over 115 to 150	over 150 to 200	over 200 to 250	over 250 to 320	over 0 to 10	over 10	all	over 0 to 100	over 100 to 150	over 150
±0.18	±0.20	±0.25	±0.3	±0.35	±0.44	±0.60	±0.70	±0.85	±0.20	±0.25	±0.30	±0.35	±0.44	±0.55	±0.70	±0.80	±0.90	0.2	0.3	0.3	0.2	0.3	0.5

ITEM	NAME OF PART	NO. OF PART	Q"TY	MATERIAL	NOTE
5	PIN HEADER	XX	P	Copper alloy	Tin Plated
4	SPRING	XX	P	Stainless steel	--
3	BUTTON	XX	P	POM	SEE NOTE
2	HOUSING	XX	P	PA66 UL94V-0	SEE NOTE
1	COVER	XX	1	PA66 UL94V-0	SEE NOTE

DWG.	ZML	DATE	25.04.16	SIZE	A4	UNITS	mm
CHK.		DATE		SHEET/OF	1 / 1		
APP.		DATE		SCALE	1:1		
NAME	GT242R-5.0-XXP-XX-00						
DWGNO.	XXXX						

Golten 宁波冠泰电子有限公司
NINGBO GOLTEN ELECTRONICS CO., LTD.