No.	Specification	Unit	Q'ty	No.	Specification	Unit	Q'ty
1	M12 needle type plastic core long body	pc	1	8	M12 metal assembly lined with black S-320	pc	1
2	Welded wire type male needle straight needle	pc	2~17	9	M12 threaded body Metal assembly housing S-316	pc	1
3	M12 threaded screw male head assembly housing S-324	pc	1	10	M12 Metal Assembly Shield ring PG9 Specification Silver S-321	pc	1
4	M12 screw male head welding wire assembly trunk sleeve S-289	pc	1	11	Nitrile rubber Φ12*Φ9*1.5 black	pc	1
5	Metal assembly corrugated gasket manganese steel silver	pc	1	12	PG9 Black M12 plastic assembled waterproof rubber plug	pc	1
6	M12 nut screw body connected to nut copper housing S-319	pc	1	13	M12 plastic packaged tail claw PG9 specification white	pc	1
7	M12 welded wire assembly type waterproof gasket	pc	1	14	M12 lock wire nut Metal assembly PG9 copper housing S-317	pc	1

Core layout

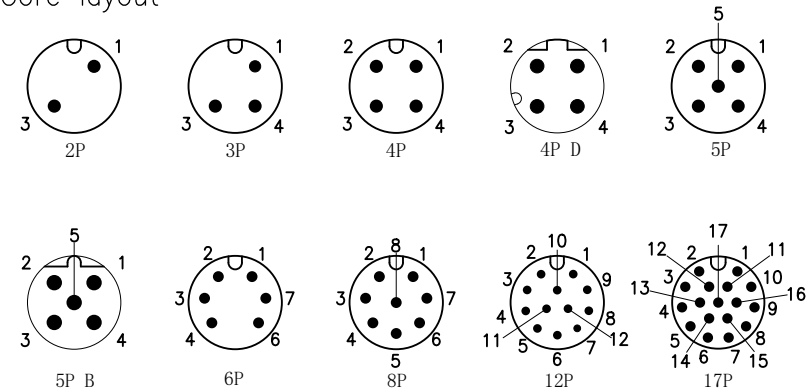

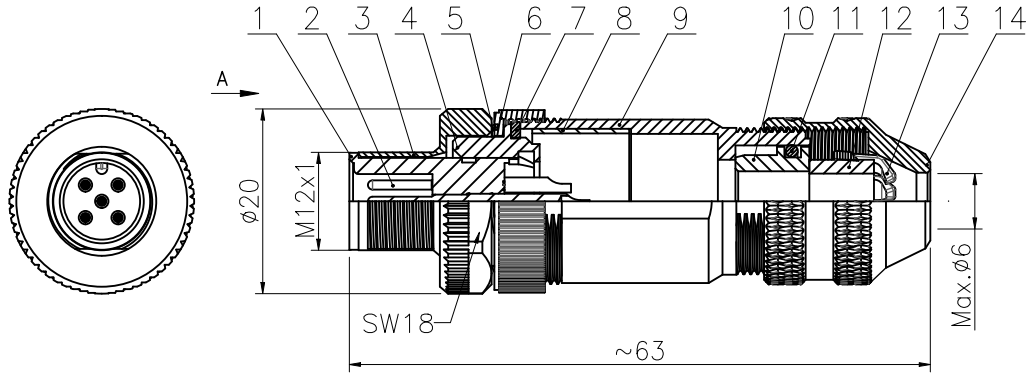

A:Cup height

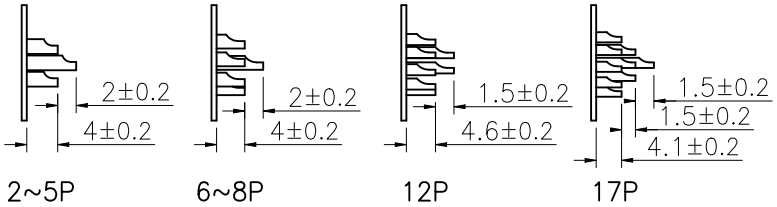

Technical parameters

Connection type: screw joint

Mode of connection: Wire solder

Class of pollution: 3

Temperature range: −40°C ~ +80°C

Level of protection: IP67

Insertion and removal cycle: ≥500

Materials

Canning material: zinc alloy/Brass, Nickelage

Contact material: Brass, Gold plating

Insulator material: Reinforced nylon, Black

Sealing material: Silica gel/Rubber, Black

Number of cores	2	3	4	4D	5	5B	6	8	12	17
Rated current voltage	4A/250V	4A/250V	4A/250V	4A/250V	4A/60V	4A/60V	2A/30V	2A/30V	1.5A/30V	1.5A/30V
Rated pulse voltage	2500V	2500V	2500V	2500V	1500V	1500V	800V	800V	800V	800V
Insulation resistance(MΩ)	≥100	≥100	≥100	≥100	≥100	≥100	≥100	≥100	≥100	≥100
Contact resistance(mΩ)	≤ 5	≤ 5	≤ 5	≤ 5	≤ 5	≤ 5	≤ 5	≤ 5	≤ 5	≤ 5

GENERAL TOLERANCE (UNLESS SPECIFIED)					
≤10 ±0.1	DWN	C.Z.H 2024.8.1			
<10~≤20 ±0.2	CHK				
<20~≤50 ±0.5	APVD			TITLE	M12 straight pin metal assembly plug welding wire type PG9 Cable outlet hole (Screw crimped shell)
Angle ±1°	UNIT	MM	REV	A	PART NO
THIRD ANGLE	SIZE	A4	SHEET	1 OF 1	DRAWING NO M12XXXMBSFWSC608002

CAZN® 正成

List number: QR-21-020 Edition A1