No.	Specification	Unit	Q'ty	No.	Specification	Unit	Q'ty
1	Welded wire type male needle straight needle	pc	2~17	6	Waterproof gasket silicone rubber ϕ17.2*ϕ13.6−1	pc	1
2	M12 needle type rubber core long body black	pc	1	7	M12 threaded assembly PG9 specification plastic housing	pc	1
3	M12 Threaded male head assembly with hexago S−324	pc	1	8	PG9 M12 plastic assembly waterproof rubber plug	pc	1
4	M12 Male head welding wire assembly trunk sleeve S−289	pc	1	9	M12 plastic packaged tail claw PG9 specification white	pc	1
5	M12 threaded body with plastic housing	pc	1	10	M12 threaded tail lock nut PG9 specification plastic housing	pc	1

Core layout

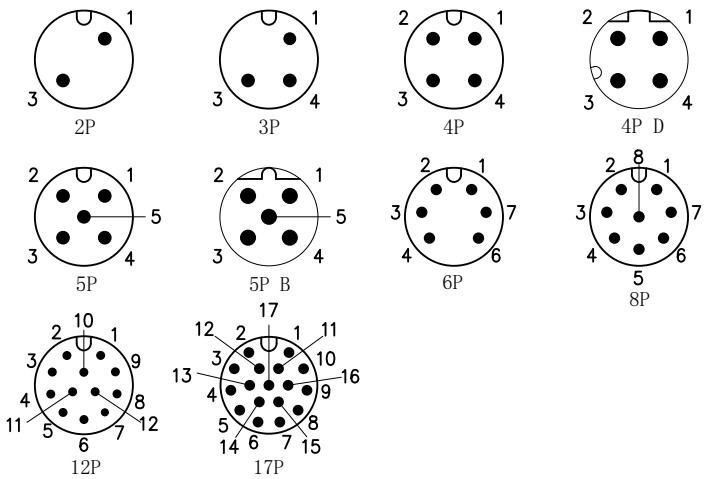

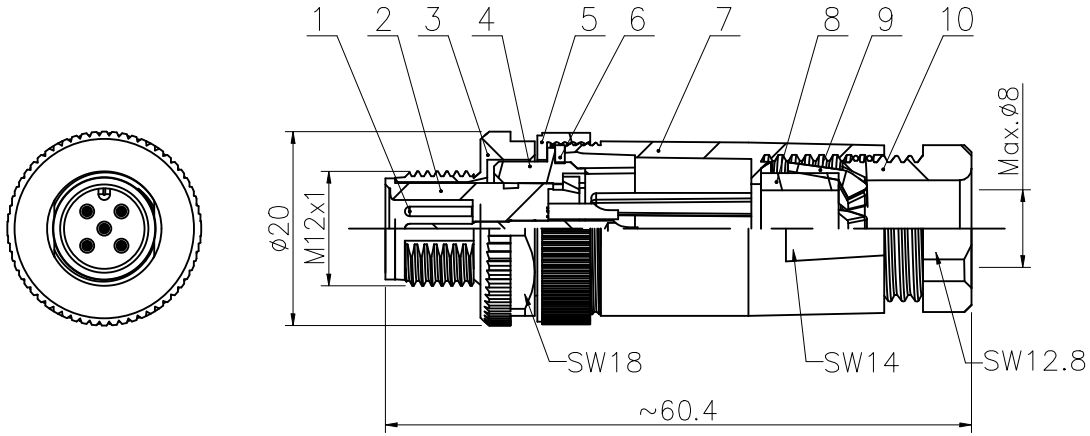

Technical parameters

Connection type: screw joint

Mode of connection: Wire solder

Class of pollution: 3

Temperature range: −40℃ ~ +80℃

Level of protection: IP67

Insertion and removal cycle: ⩾500

A:Cup height

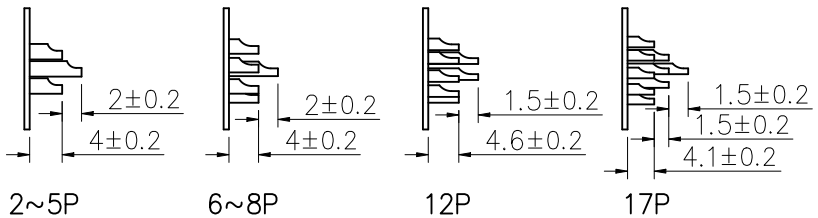

Number of cores	2	3	4	4D	5	5B	6	8	12	17
Rated current voltage	4A/250V	4A/250V	4A/250V	4A/250V	4A/60V	4A/60V	2A/30V	2A/30V	1.5A/30V	1.5A/30V
Rated pulse voltage	2500V	2500V	2500V	2500V	1500V	1500V	800V	800V	800V	800V
Insulation resistance(MΩ)	⩾100	⩾100	⩾100	⩾100	⩾100	⩾100	⩾100	⩾100	⩾100	⩾100
Contact resistance(mΩ)	⩽ 5	⩽ 5	⩽ 5	⩽ 5	⩽ 5	⩽ 5	⩽ 5	⩽ 5	⩽ 5	⩽ 5

GENERAL TOLERANCE (UNLESS SPECIFIED)	DWN	C.Z.H 2024.7.29			
≤10 ±0.1 <10~≤20 ±0.2 <20~≤50 ±0.5 Angle ±1°	CHK				
	APVD			TITLE	M12 Straight pin plastic assembly plug welded cable PG9 cable outlet hole (screw crimped housing)
THIRD ANGLE	UNIT	MM	REV A	PART NO	
	SIZE	A4	SHEET 1 OF 1	DRAWING NO	M12XXXMPSFWSC608002

List number: QR-21-020 Edition A1