Transmittal, reproduction, dissemination and/or editing of this document as well as utilization of its contents and communication thereof to others without express authorization are prohibited.
未经允许禁止传输、复制、编辑该文档，以及利用其内容进行交流

REVISION RECORD				
REV	ECN	DESCRIPTION	DRFT	DATE

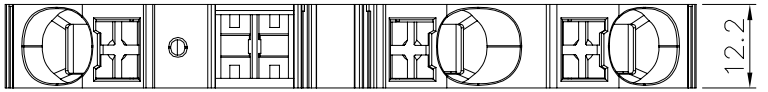

Connection method:
1. For Solid wire, peeling wire in right length, push down the wire.
2. For Stranded wire, peeling wire in right length, push down the key & fix the wire, or wire furruled and fix then.

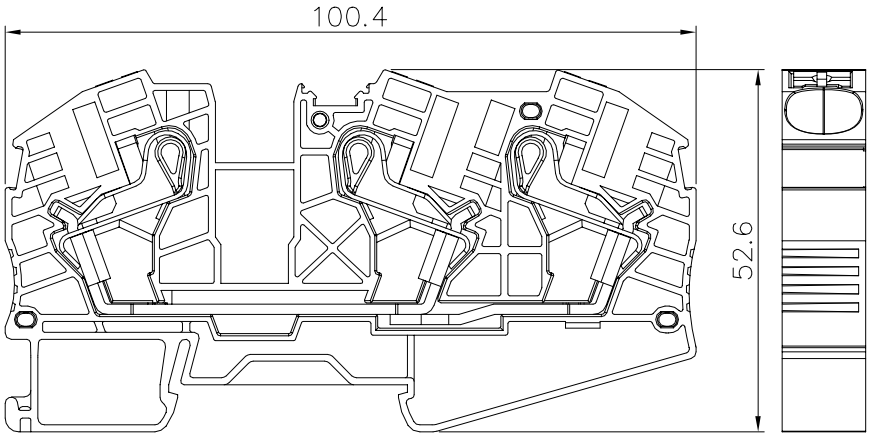

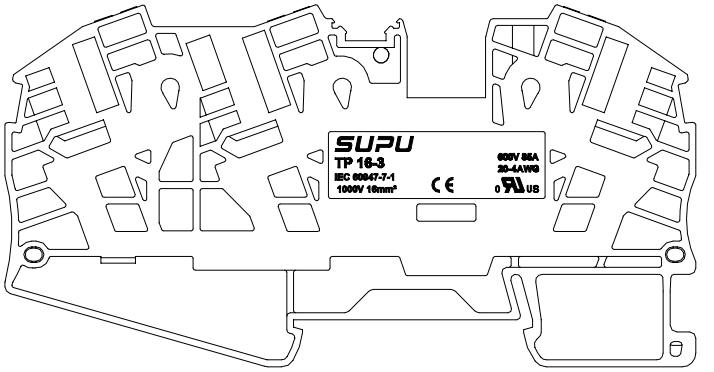

NOTES:
UL/CUL Standard
1.Conductor cross section : 20~4AWG
2.Rated Voltage/Current :

Use group	B	C	D
Rated voltage(V)	600	600	
Rated current(A)	85	85	

IEC Standard
1.Conductor cross section :

Wire range(Solid/Stranded)	0.5–16mm²
Solid	0.5–25mm²
Stranded	0.5–16mm²
Stranded with ferrules without plastic sleeve	0.5–16mm²
Stranded with ferrules with plastic sleeve	0.5–16mm²

2.Rated Voltage/Current :

Surge voltage category	Ⅲ
Pollution degree	3
Rated surge voltage(KV)	8
Rated voltage(V)	1000
Rated current(A)	76

Material:

Insulator	PA66	UL94 V-0
Conductor	Copper alloy	Sn plated
Spring	Stainless steel	
Button	PA66	UL94 V-0

General information:
1.Dimension shall be interpreted per ASME Y14.5-2009
2.Stripping length : 18mm
3.Operating temperature:-40°C~+105°C
4.RoHS Compliance
5.Undimensioned Tolerances:

Pitch Range In mm			Nominal Dimension Range In mm						⊥ ∩ ∠
TO 6	Over 6 TO 10	Over 10 TO 24	TO 30	Over 30 TO 60	Over 60 TO 100	Over 100 TO 150	Over 150		0.1/10
									∠
±0.15	±0.20	±0.30	±0.30	±0.50	±0.70	±1.00	±1.30		±2°

HOW TO ORDER:
TP16-3-XX
Sereies No.
Color:
GY: Grey
BU: Blue
OG: Orange

订货号 Order No.	TP16-3-XX		名称 Name	TP系列直插式弹簧 16mm² 一进二出接线端子	未注公差 Tolerance	表面 Surfaace	
项目 Item	签字 Signature	日期 Date			Tolerances Table	VDI21	
设计 Design	df	04/09/20"	图号 Drawing No.	PRM002142	版本号 Revision Number	重量 Weight	比例 Scale
审核 Check	cw	04/09/20"	材料 Material	Notes	M0	/	1:1
工艺 Process	-	-	物料号 Item No.	411520009(灰色)	第1页/共1页 1 of 1	mm	
标准化 Unify	-	-		411520010(橙色)	SUPU 宁波速普电子有限公司		
批准 Approve	lwl	04/09/20"		411520011(蓝色)	NINGBO SUPU ELECTRONICS CO.,LTD.		

借通用件登记 Common Part
原图号 Old Draw. No.
底图总号 Assembly No.