Transmittal, reproduction, dissemination and/or editing of this document as well as utilization of its contents and communication thereof to others without express authorization are prohibited.
未经允许禁止传输、复制、编辑该文档，以及利用其内容进行交流

REVISION RECORD

REV	ECN	DESCRIPTION	DRFT	DATE
2	DCN0016352	配合自动化修改	ding	2022.09.18

Connection method:
1. For Solid wire, peel wire in right length, fix in by rated torque force.
2. For flexible wire, connect directly after peeling in right length, or furruled on wire and fix in by rated torque force.

Attention: Torque force should be equable.
No explosive power.

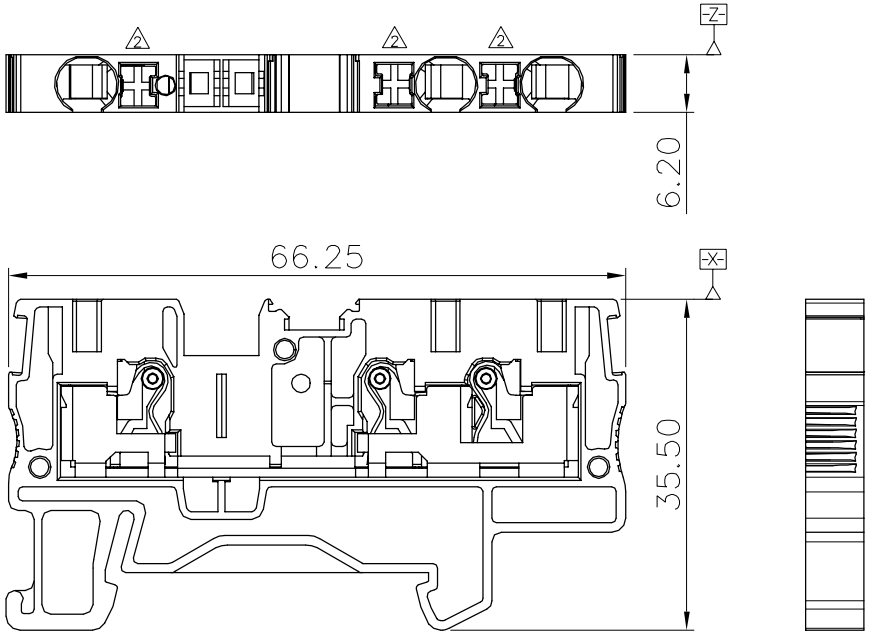

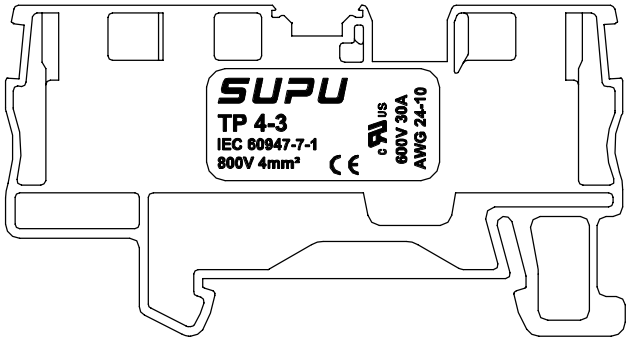

NOTES:

UL/CUL Standard

1.Conductor cross section : 24~10AWG

2.Rated Voltage/Current :

Use group	B	C	D
Rated voltage(V)	600	600	
Rated current(A)	30	30	

IEC Standard

1.Conductor cross section :

Wire range(Solid/Stranded)	0.2-4mm²
Solid	0.2-6mm²
Stranded	0.2-4mm²
Stranded with ferrules without plastic sleeve	0.2-4mm²
Stranded with ferrules with plastic sleeve	0.2-4mm²

2.Rated Voltage/Current :

Surge voltage category	Ⅲ
Pollution degree	3
Rated surge voltage(KV)	8
Rated voltage(V)	800
Rated current(A)	32

Material:

Insulator	PA66	UL94 V-0
Conductor	Copper alloy	Sn plated
Spring	Stainless steel	
Button	POM	

General information:

1.Dimension shall be interpreted per ASME Y14.5-2009

2.Stripping length : 12mm

3.Operating temperature: -40°C~+105°C

4.RoHS Compliance

5.Undimensioned Tolerances:

Pitch Range In mm			Nominal Dimension Range In mm					— ⌒ ⌭
TO 6	Over 6 TO 10	Over 10 TO 24	TO 30	Over 30 TO 60	Over 60 TO 100	Over 100 TO 150	Over 150	0.1/10
								∠
±0.15	±0.20	±0.30	±0.30	±0.50	±0.70	±1.00	±1.30	±2°

HOW TO ORDER:

TP4-3-XX

Sereies No.

Color:
GY: Grey
BU: Blue
OG: Orange

订货号 Order No.	TP4-3-XX		名称 Name	TP系列直插式弹簧 4mm² 一进两出接线端子	未注公差 Tolerance	表面 Surfaace	
项目 Item	签字 Signature	日期 Date			Tolerances Table	VDI21	
设计 Design	cjs	05/06/20"	图号 Drawing No.	PRM002035	版本号 Revision Number	重量 Weight	比例 Scale
审核 Check	cw	05/06/20"	材料 Material	Notes	M2	/	1:1
工艺 Process	-	-	物料号 Item No.	412202001	第1页/共1页 1 of 1	mm	
标准化 Unify	-	-		412202002	SUPU 宁波速普电子有限公司		
批准 Approve	lwl	05/06/20"		412202003	NINGBO SUPU ELECTRONICS CO.,LTD.		

借通用件登记 Common Part	
原图号 Old Draw. No.	
底图总号 Assembly No.	