FILM CAPACITORS · **DC LINK**

CBB **131** DL SERIES

FEATURES

- **DC-Link**
- Very low dissipation factor
- High ripple current capability
- Self-healing
- Long lifetime
- Aluminum case

OVERVIEW

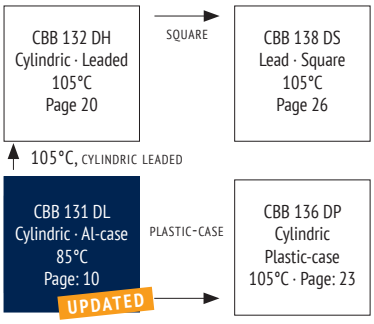

PRODUCT

APPLICATIONS

- High power frequency converters
- Motion control, welding equipment, elevators
- Electric and hybrid electric vehicles
- Photovoltaic and wind inverters

CHARACTERISTICS

ITEM	CHARACTERISTICS
Climatic Category	40/85/56 (IEC 61071)
Operating Temperature	−40 ~ +85°C (θhotspot ≤ 85°C)
Storage Temperature	−40 ~ +85°C
Rated Voltage U_{RDC}	600 ~ 3 600V_{DC}
Capacitance Range	44 ~ 4 300µF
Capacitance Tolerance	±10% (K), ±5% (J)
Voltage between Terminals U_{TT}	1,5 * U_{RDC} (20°C, 10s)
Voltage between Terminals & Case U_{TC}	≥ 3 000V_{AC} (20°C, 50Hz, 10s)
Max. Overvoltage	Please see IEC 61071
Insulation Resistance Ri*C	≥ 10 000 MΩ * µF (20°C, 100 V_{DC}, 1 min)
Dielectric Dissipation Factor tan δ_0	≤ 2 * 10^{-4} (20°C, 100 Hz)
Life Time Expectancy	≥ 100 000h (θhotspot ≤ 70°C, U_{RDC}), failure rate ≤ 50 FIT or 100 FIT (see table)
Reference Standard	IEC 61071:2007

ENVIRONMENTAL

The products are RoHS, WEEE and REACh compliant.

The detailed version please see seperate "Environmental Certificates" document or www.jianghai-europe.com

APPROVALS

UL94-V0:

Plastic & Compound Mass

UL810:

CZDS2.E227010 (Construction)

(except Can Style C & P)

LIFETIME

END OF LIFE: 3% REDUCTION OF CAPACITANCE

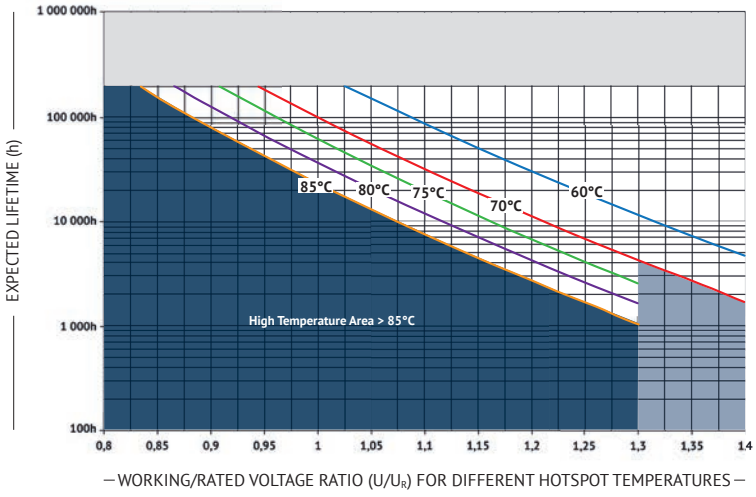

CURRENT DERATING

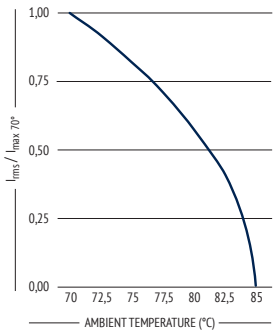

CAN STYLES (OTHERS ON REQUEST)

CAN STYLE B

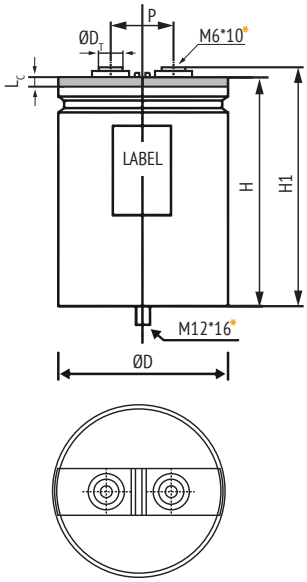

H1=H+5mm

Aluminum Case
with Flanging
Anti-Creep Insulation

D_T = 12mm

M6*10 screw female

CAN STYLE C

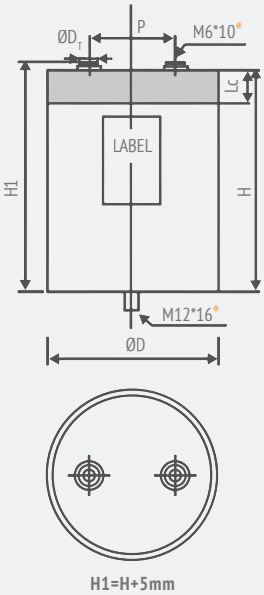

H1=H+5mm

Aluminum/Plastic Case

D_T = 16mm

M6*10 screw female

no UL 810!

not preferred

CAN STYLE D

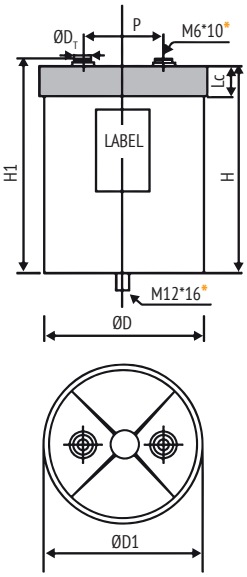

H1=H+5mm

Aluminum/Plastic Case
Enlarged Anti-Creep Insulation

D_T = 12mm

M6*10 screw female

CAN STYLE G

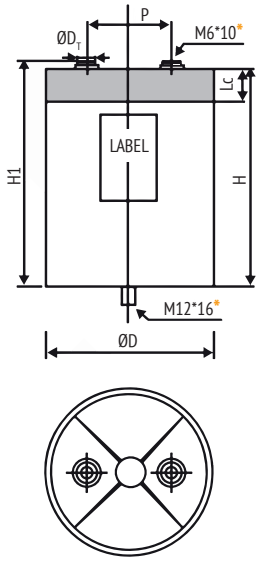

H1=H+5mm

Aluminum/Plastic Case
Anti-Creep Insulation

Can Style **G** D_T = 16mm

Can Style **G** M8*10 screw female
M10*10 screw female

CAN STYLE H/I

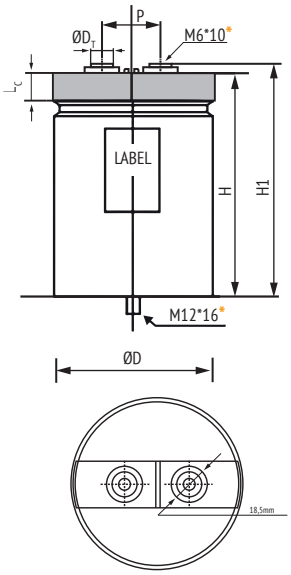

H1=H+5mm

Aluminum/Plastic Case
with Flanging
Anti-Creep Insulation

Can Style **H/I**: D_T = 14mm

M6*10 screw female

CAN STYLE P

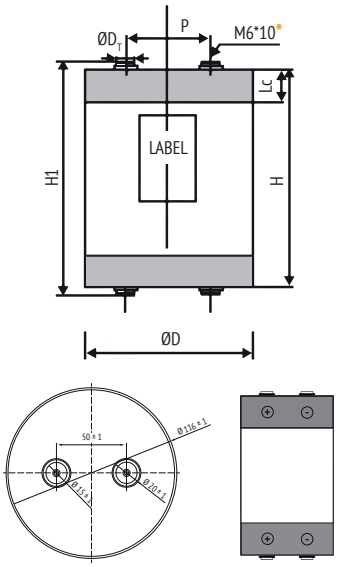

H1=H+5mm

Aluminum/Plastic Case
Double Pole
Anti-Creep Insulation

DT = 16mm

M6*10 screw female

in mm

DIMENSIONS

Diameter D ± 1,0mm	Diameter Cab D_1 ± 1,0mm	Can Style	Pitch P ± 0,5mm	Length Cab L_C ± 1,0mm	Diameter Terminal D_T ± 0,5mm
76	-	B	32	32	12
86	-	B	32	32	12
86	-	C	32	20	16
89	92	D	45	35	12
96	-	B	32	32	12
116	-	H	50	10	14
116	-	I	50	45	14
136	-	G	50	35	16

Max. Torque for terminals: 3Nm (M5), 5Nm (M6), 6Nm (M8), 8Nm (M10)
Max. Torque for stud mounting screws: 12Nm (M12), 15Nm (M16)

INTERNAL CONSTRUCTION

(Example: Can Style C, double inner construction)

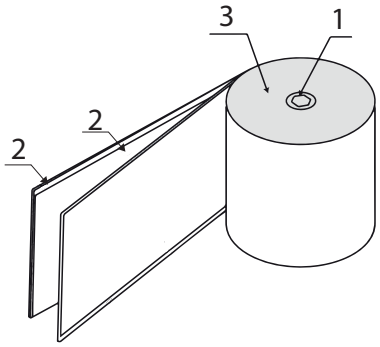

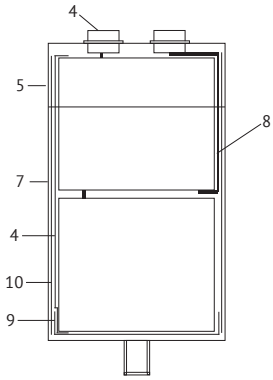

NO.	ITEM	MATERIAL
1	Winding Core	PC
2	Metallized Film	PP + Al, Zn
3	Metal Sprayed Electrode	Zn + Sn/Zn
4	Terminals	Cu, Sn-plated
5	Deck	PC

NO.	ITEM	MATERIAL
6	Aluminum Case	Al
7	Potting Compound	PU resin (+Epoxy)
8	Connection Electrode	Cu
9	Insulation Cover	PP0
10	Winding Insulation	Paper + PP

MARKING

Jianghai	BRAND
CBB 131	SERIES DESIGNATION
540µF ±10%	CAPACITANCE AND TOLERANCE
U_R = 600V_{DC}	U_R RATED VOLTAGE
U_{TC} = 3000V 50/60 HZ	U_{TC} VOLTAGE BETWEEN TERMINALS AND CASE, FREQUENCY
-40~+85°C IEC61071	TEMPERATURE RANGE, REFERENCE STANDARD
Discharge before handling	SAFETY WARNING
E37F26104	DATE CODE

ACCESSOIRES FOR BRACKET MOUNTING (ORDER CODE „Y“)

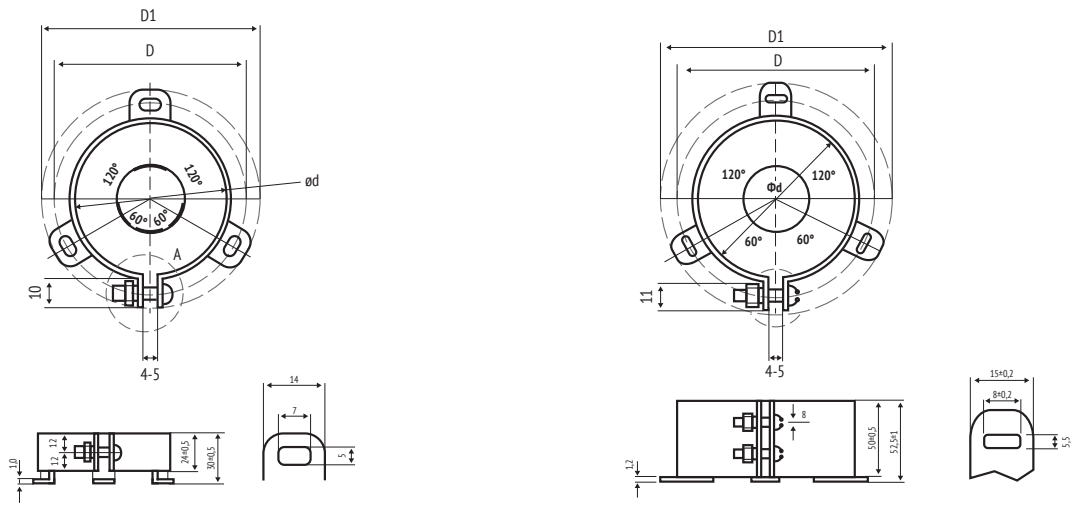

in mm

ORDER CODE

FC	C	A3	DL	427	K	K	136	0	3	1	A	1	E 3
Capacitor type	Product shape	DC rated voltage code (V)	Series code	Capacitance Code Examples (µF)	Capacitance tolerance	Diameter (mm)	Height (mm)	Terminal style	Terminal pitch (mm)	Stud bolt mounting	Can style	Inner Construction	For internal use
Film Cap. = FC	cylindrical = C	600 **2S**	CBB131 **DL**	100 **107**	±5% **J**	76 **H**	95 **095**	Female M5*7 **8**	32 **3**	flat, with Y bracket **Y**	Style B **B**	**1**	
		700 **2Q**		220 **227**	±10% **K**	85 **K**	120 **120**	Female M6*10 **0**	45 **4**	flat, without bracket **0**	Style C **C**	**2**	
		800 **2K**		420 **427**	±20% **M**	86 **L**	136 **136**	Female M8*10 **2**	50 **5**	bolt M12x16 **1**	Style D **D**	**3**	
		900 **R2**		500 **507**		89 **M**	155 **155**	Female M8*12 **6**		bolt M16x25 **2**	Style E **E**		
		1000 **3A**		1000 **108**		96 **W**	175 **175**	Female M10*10 **4**		bolt M12x12 **3**	Style F **F**		
		1100 **A3**		1100 **118**		116 **P**	225 **225**	Female M10*12 **B**			Style G **G**		
		1200 **3B**				136 **T**	230 **230**	Male M6*20 **1**			Style H **H**		
		1300 **O3**						Male M8*12 **9**			Style I **I**		
		1500 **C3**						Male M8*15 **A**			Style L **L**		
		1700 **F3**						Male M8*17 **7**			Style N **N**		
		2000 **3D**						Male M8*20 **3**			Style P **P**		
		2200 **D2**						Male M10*20 **5**					
		2600 **3E**											
		2800 **L3**											
		3000 **3F**											
		3200 **3U**											
		3600 **3V**											

RATINGS

U_R ≤85°C (V_{DC})	C_R (µF)	I_{max} 70°C, 1kHz (A)	I_{max} 60°C, 1kHz (A)	I_{max} 50°C, 1kHz (A)	I_{max} ≤40°C, 1kHz (A)	Î (1) (A)	ESR_{typ} 20°C, 1kHz (mΩ)	R_{th} (2) (K/W)	L_S 20°C (nH)	D ±1,0 (mm)	H ±1,0 (mm)	ORDER CODE "#" to be defined, see ordering code table
600 2S	480	35	50	61	70	4 800	1,6	5,1	≤50	76	95	FCC2SDL487#H095#3##1E3
	650	33	47	58	67	5 200	1,9	4,7	≤60	76	120	FCC2SDL657#H120#3##1E3
		40,3	57	70	81	5 200	1,1	5,6	≤50	86	95	FCC2SDL657#L095#3##1E3
	880	40	57	69	80	6 248	1,3	4,8	≤60	86	120	FCC2SDL887#L120#3##1E3
	950	41	58	71	82	6 650	1,4	4,2	≤60	76	175	FCC2SDL957#H175#3##2E3
	1 100	40	57	70	81	6 600	1,4	4,4	≤50	86	155	FCC2SDL118#L155#3##2E3
	1 200	48	68	83	96	7 200	0,8	5,4	≤50	116	95	FCC2SDL128#P095#5##1E3
	1 300	48	68	84	96	7 800	1,0	4,3	≤60	86	175	FCC2SDL138#L175#3##2E3
	1 600	47	67	82	94	9 600	0,9	5,0	≤60	116	120	FCC2SDL168#P120#5##1E3
	1 800	47	67	83	95	10 800	1,1	4,0	≤60	86	225	FCC2SDL188#L225#3##2E3
	1 900	43	61	75	86	11 400	1,1	4,9	≤60	116	136	FCC2SDL198#P136#5##1E3
	2 100	60	85	100	100	11 550	0,6	4,6	≤60	116	155	FCC2SDL218#P155#5##2E3
	2 400	60	86	100	100	12 000	0,6	4,5	≤60	116	175	FCC2SDL248#P175#5##2E3
	3 000	68	96	100	100	15 000	0,8	2,7	≤60	116	230	FCC2SDL308#P230#5##2E3
700 2Q	350	35	50	61	70	3 600	1,6	5,1	≤60	76	95	FCC2QDL357#H095#3##1E3
	480	31	45	55	64	3 840	2,1	4,7	≤60	76	120	FCC2QDL487#H120#3##1E3
		36	51	62	71	3 840	1,4	5,6	≤60	86	95	FCC2QDL487#L095#3##1E3
	500*	35	50	61	70	1 680	1,6	5,1	≤50	76	95	FCC2QDL507#H095#3##2E3
	580	30	43	52	60	5 800	2,4	4,6	≤60	76	136	FCC2QDL587#H136#3##1E3
	620	39	56	68	79	6 200	1,5	4,3	≤60	76	155	FCC2QDL627#H155#3##1E3
	660*	36	51	62	71	2 200	1,4	5,6	≤50	86	95	FCC2QDL667#L095#3##2E3
	700*	32	46	56	65	1 680	2,0	4,7	≤60	76	120	FCC2QDL707#H120#3##2E3
	700	38	55	67	77	7 200	1,6	4,2	≤60	76	175	FCC2QDL707#H175#3##1E3
	750	32	47	57	66	7 200	2,0	4,6	≤60	86	136	FCC2QDL757#L136#3##1E3
	780	33	48	59	68	7 800	1,9	4,6	≤60	86	136	FCC2QDL787#L136#3##1E3
	850*	31	45	55	64	1 680	2,3	4,3	≤60	76	155	FCC2QDL857#H155#3##2E3
	900*	35	50	61	70	3 350	1,7	4,8	≤60	86	120	FCC2QDL907#L120#3##2E3
	920	41	58	71	82	9 200	1,1	5,4	≤60	116	95	FCC2QDL927#P095#5##1E3
	950	39	56	68	79	9 500	1,5	4,3	≤60	86	175	FCC2QDL957#L175#3##2E3
	1 000*	44	63	70	70	3 200	1,2	4,2	≤60	76	175	FCC2QDL108#H175#3##2E3
	1 200*	43	67	70	70	2 350	1,0	4,4	≤60	86	155	FCC2QDL128#L155#3##1E3
	1 200	37	53	65	75	7 200	1,4	5,0	≤60	116	120	FCC2QDL128#P120#5##2E3

*≤100 FIT Failure Rate

(1) Maximum permissible peak current, (2) Thermal resistance from hotspot to ambient (free convection)

U_R ≤85°C (V_{DC})	C_R (µF)	I_{max} 70°C, 1kHz (A)	I_{max} 60°C, 1kHz (A)	I_{max} 50°C, 1kHz (A)	I_{max} ≤40°C, 1kHz (A)	Î (1) (A)	ESR_{typ} 20°C, 1kHz (mΩ)	R_{th} (2) (K/W)	L_S 20°C (nH)	D ±1,0 (mm)	H ±1,0 (mm)	ORDER CODE "#" to be defined, see ordering code table
700 2Q	1 400*	48	68	70	70	4 500	1,0	4,3	≤50	86	175	FCC2QDL148#L175#3##2E3
	1 500	43	61	75	86	9 000	1,1	4,9	≤60	116	136	FCC2QDL158#P136#5##1E3
		52	74	90	100	9 000	0,8	4,6	≤60	116	155	FCC2QDL158#P155#5##2E3
	1 800	47	67	82	94	10 800	1,0	4,5	≤60	116	175	FCC2QDL188#P175#5##2E3
	2 300	68	96	100	100	13 800	0,8	2,7	≤60	116	230	FCC2QDL238#P230#5##2E3
800 2K	280	34	48	59	68	2 800	1,7	5,1	≤50	76	95	FCC2KDL287#H095#3##1E3
	350*	34	48	59	68	1 550	1,7	5,1	≤50	76	95	FCC2KDL357#H095#3##2E3
	370	35	49	60	69	3 700	1,5	5,6	≤50	86	95	FCC2KDL377#L095#3##1E3
	380	30	41	51	58	3 800	2,2	4,7	≤60	76	120	FCC2KDL387#H120#3##1E3
	430	28	40	49	57	4 300	2,6	4,6	≤60	76	136	FCC2KDL437#H136#3##1E3
	470	38	54	66	76	4 700	1,6	4,3	≤60	76	155	FCC2KDL477#H155#3##2E3
	490*	35	49	60	69	2 000	1,5	5,6	≤50	86	95	FCC2KDL497#L095#3##2E3
	500*	31	45	55	64	1 600	2,1	4,7	≤60	76	120	FCC2KDL507#H120#3##2E3
	510	34	48	59	68	5 100	1,8	4,8	≤60	86	120	FCC2KDL517#L120#3##1E3
	560	35	51	63	73	5 600	1,7	4,2	≤60	76	175	FCC2KDL567#H175#3##2E3
	580	33	47	57	65	5 800	2,0	4,6	≤60	86	136	FCC2KDL587#L136#3##1E3
	640	39	55	67	77	6 400	1,5	4,4	≤50	86	155	FCC2KDL647#L155#3##2E3
	650*	45	65	70	70	3 200	1,1	4,3	≤60	76	155	FCC2KDL657#H155#3##2E3
		34	48	59	68	3 200	1,8	4,8	≤60	86	120	FCC2KDL657#L120#3##2E3
	710	41	58	71	82	7 100	1,1	5,4	≤50	116	95	FCC2KDL717#P095#5##1E3
	730*	44	63	70	70	3 100	1,2	4,2	≤60	76	175	FCC2KDL737#H175#3##2E3
	750	36	54	66	76	7 500	1,3	4,3	≤60	86	175	FCC2KDL757#L175#3##2E3
	770*	33	48	59	68	2 100	1,9	4,6	≤60	86	136	FCC2KDL777#L136#3##2E3
	780*	33	48	58	67	2 150	2,0	4,4	≤60	86	155	FCC2KDL787#L155#3##2E3
	850*	47	67	70	70	4 100	1,0	4,4	≤60	86	155	FCC2KDL857#L155#3##2E3
	950*	45	65	70	70	4 130	1,1	4,3	≤60	86	175	FCC2KDL957#L175#3##2E3
	970	40	58	71	82	7 760	1,2	5,0	≤60	116	120	FCC2KDL977#P120#5##1E3
	1 000	42	60	73	85	8 000	1,4	4,0	≤60	86	225	FCC2KDL108#L225#3##2E3
		38	54	66	76	8 000	1,4	4,9	≤60	116	136	FCC2KDL108#P136#5##1E3
	1 200	52	74	90	100	9 600	0,8	4,6	≤60	116	155	FCC2KDL128#P155#5##2E3
	1 400	44	66	81	94	11 200	0,8	4,5	≤60	116	175	FCC2KDL148#P175#5##2E3
	1 800	60	86	100	100	11 700	1,0	2,7	≤60	116	230	FCC2KDL188#P230#5##2E3
	2 000	63	90	100	100	12 000	0,7	3,5	≤80	136	175	FCC2KDL208#T175#5##2E3
	2 700	65	93	100	100	16 200	0,8	2,9	≤80	136	230	FCC2KDL278#T230#5##2E3
	3 100	70	100	100	100	18 600	1,0	2,0	≤80	136	252	FCC2KDL318#T252#5##2E3
	3 300	71	100	100	100	19 800	0,9	2,2	≤80	116	345	FCC2KDL338#P345#5##3E3
	4 300	78	100	100	100	25 800	0,9	1,8	≤80	136	345	FCC2KDL438#T345#5##3E3
900 R2	280	31	44	54	63	2 800	2,0	5,1	≤50	76	95	FCCR2DL287#H095#3##1E3
	350*	34	48	59	68	1 500	1,7	5,1	≤50	76	95	FCCR2DL357#H095#3##2E3
	370	33	47	58	67	3 700	1,6	5,6	≤50	86	95	FCCR2DL377#L095#3##1E3
	380	28	40	49	56	3 800	2,6	4,7	≤60	76	120	FCCR2DL387#H120#3##1E3
	430	27	39	47	55	4 300	2,9	4,6	≤60	76	136	FCCR2DL437#H136#3##1E3
	470	36	52	64	74	4 700	1,7	4,3	≤60	76	155	FCCR2DL477#H155#3##2E3
	490*	35	49	60	69	2 000	1,5	5,6	≤50	86	95	FCCR2DL497#L095#3##2E3
	500*	31	45	55	64	1 600	2,1	4,7	≤60	76	120	FCCR2DL507#H120#3##2E3
	510	31	44	54	62	5 100	2,1	4,8	≤60	86	120	FCCR2DL517#L120#3##1E3
	560	34	49	60	69	5 600	2,0	4,2	≤60	76	175	FCCR2DL567#H175#3##2E3
	580	31	44	54	62	5 800	2,2	4,6	≤60	86	136	FCCR2DL587#L136#3##1E3
	600*	31	44	54	62	1 580	2,4	4,3	≤60	76	155	FCCR2DL607#H155#3##2E3
	640	39	55	67	77	6 400	1,5	4,4	≤50	86	155	FCCR2DL647#L155#3##2E3
	650*	45	65	70	70	3 100	1,1	4,3	≤60	76	155	FCCR2DL657#H155#3##2E3
		31	44	54	62	3 100	2,1	4,8	≤60	86	120	FCCR2DL657#L120#3##2E3
	710	39	56	68	79	7 100	1,2	5,4	≤50	116	95	FCCR2DL717#P095#5##1E3
	730*	44	63	70	70	3 200	1,2	4,2	≤60	76	175	FCCR2DL737#H175#3##2E3
	750	38	53	66	76	7 500	1,6	4,3	≤60	86	175	FCCR2DL757#L175#3##2E3
	770*	33	48	59	68	2 100	1,9	4,6	≤60	86	136	FCCR2DL777#L136#3##2E3

*≤100 FIT Failure Rate

(1) Maximum permissible peak current, (2) Thermal resistance from hotspot to ambient (free convection)

U_R ≤85°C (VDC)	C_R (µF)	I_{max} 70°C, 1kHz (A)	I_{max} 60°C, 1kHz (A)	I_{max} 50°C, 1kHz (A)	I_{max} ≤40°C, 1kHz (A)	Î (1) (A)	ESR_{typ} 20°C, 1kHz (mΩ)	R_{th} (2) (K/W)	L_S 20°C (nH)	D ±1,0 (mm)	H ±1,0 (mm)	ORDER CODE "#" to be defined, see ordering code table
900 R2	780*	33	48	58	67	2 150	2,0	4,4	≤60	86	155	FCCR2DL787#L155#3##2E3
	850*	47	67	70	70	4 000	1,0	4,4	≤60	86	155	FCCR2DL857#L155#3##2E3
	950*	37	52	63	70	4 150	1,7	4,3	≤60	86	175	FCCR2DL957#L175#3##2E3
	970	39	55	68	78	7 600	1,3	5,0	≤60	116	120	FCCR2DL977#P120#5##1E3
	1 000	40	58	71	82	8 000	1,5	4,0	≤60	86	225	FCCR2DL108#L225#3##2E3
		36	52	64	74	8 000	1,5	4,9	≤60	116	136	FCCR2DL108#P136#5##1E3
	1 200	47	66	81	93	9 600	1,0	4,6	≤60	116	155	FCCR2DL128#P155#5##2E3
	1 400	50	70	86	99	11 200	0,9	4,5	≤60	116	175	FCCR2DL148#P175#5##2E3
	1 800	58	82	100	100	11 700	1,1	2,7	≤60	116	230	FCCR2DL188#P230#5##2E3
	2 000	70	100	100	100	12 000	0,8	2,5	≤80	136	175	FCCR2DL208#T175#5##2E3
	2 700	61	88	100	100	16 200	0,9	2,9	≤80	136	230	FCCR2DL278#T230#5##2E3
	3 100	67	95	100	100	18 600	1,1	2,0	≤80	136	252	FCCR2DL318#T252#5##2E3
	3 300	67	95	100	100	19 800	1,0	2,2	≤80	116	345	FCCR2DL338#P345#5##3E3
	4 300	74	100	100	100	25 800	1,0	1,8	≤80	136	345	FCCR2DL438#T345#5##3E3
1000 3A	220	29	40	50	57	2 420	2,4	5,1	≤50	76	95	FCC3ADL227#H095#3##1E3
	290	31	44	64	62	3 190	1,8	5,6	≤50	86	95	FCC3ADL297#L095#3##1E3
	300*	32	45	56	64	1 500	1,9	5,1	≤50	76	95	FCC3ADL307#H095#3##2E3
	330	25	36	44	51	3 630	3,3	4,6	≤60	76	136	FCC3ADL337#H136#3##1E3
	360	35	49	60	69	3 960	1,9	4,3	≤60	76	155	FCC3ADL367#H155#3##2E3
	400*	31	44	54	62	1 580	2,2	4,7	≤60	76	120	FCC3ADL407#H120#3##2E3
		33	47	58	67	1 580	1,6	5,6	≤50	86	95	FCC3ADL407#L095#3##2E3
	420	34	49	60	69	4 620	2,0	4,2	≤60	76	175	FCC3ADL427#H175#3##2E3
	450	32	46	56	64	4 950	2,1	4,6	≤60	86	136	FCC3ADL457#L136#3##1E3
	490*	29	42	52	60	1 600	2,6	4,3	≤60	76	155	FCC3ADL497#H155#3##2E3
	500	37	52	65	75	5 000	1,6	4,4	≤50	86	155	FCC3ADL507#L155#3##2E3
	520*	44	62	70	70	1 600	1,2	4,3	≤60	76	155	FCC3ADL527#H155#3##2E3
	540*	33	47	57	66	2 000	1,9	4,8	≤60	86	120	FCC3ADL547#L120#3##2E3
	540	39	56	68	79	5 400	1,2	5,4	≤50	116	95	FCC3ADL547#P095#5##1E3
	560	37	52	64	73	5 600	1,7	4,3	≤60	86	175	FCC3ADL567#L175#3##2E3
	590*	42	61	70	70	3 000	1,3	4,2	≤60	76	175	FCC3ADL597#H175#3##2E3
	600*	32	47	57	66	3 120	2,0	4,6	≤60	86	136	FCC3ADL607#L136#3##2E3
	640*	32	47	57	66	3 250	2,1	4,4	≤60	86	155	FCC3ADL647#L155#3##2E3
	680*	44	64	70	70	3 280	1,1	4,4	≤60	86	155	FCC3ADL687#L155#3##2E3
	740	39	55	68	79	7 400	1,3	5,0	≤60	116	120	FCC3ADL747#P120#5##1E3
	780*	45	65	70	70	4 000	1,1	4,3	≤60	86	175	FCC3ADL787#L175#3##2E3
	810	39	55	68	79	8 100	1,6	4,0	≤60	86	225	FCC3ADL817#L225#3##2E3
	860	35	51	62	71	8 600	1,6	4,9	≤60	116	136	FCC3ADL867#P136#5##1E3
	900	49	70	85	98	8 760	0,9	4,6	≤60	116	155	FCC3ADL907#P155#5##2E3
	1 100	50	70	86	99	8 800	0,9	4,5	≤60	116	175	FCC3ADL118#P175#5##2E3
	1 400	58	82	100	100	11 200	1,1	2,7	≤60	116	230	FCC3ADL148#P230#5##2E3
	1 500	70	100	100	100	12 000	0,8	2,5	≤80	136	175	FCC3ADL158#T175#5##2E3
	2 100	61	88	100	100	12 600	0,9	2,9	≤80	136	230	FCC3ADL218#T230#5##2E3
	2 200	64	91	100	100	13 200	1,1	2,2	≤80	116	345	FCC3ADL228#P345#5##3E3
	2 400	67	95	100	100	14 400	1,1	2,0	≤80	136	252	FCC3ADL248#T252#5##2E3
	3 200	71	100	100	100	19 200	1,1	1,8	≤80	136	345	FCC3ADL328#T345#5##3E3
1100 A3	170	27	38	47	54	2 040	2,7	5,1	≤50	76	95	FCCA3DL177#H095#3##1E3
	220*	31	44	54	63	1 550	2,0	5,1	≤50	76	95	FCCA3DL227#H095#3##2E3
	240	26	37	45	52	2 880	3,1	4,7	≤60	76	120	FCCA3DL247#H120#3##1E3
		31	43	53	61	2 880	1,9	5,6	≤50	86	95	FCCA3DL247#L095#3##1E3
	270	25	36	44	51	3 240	3,4	4,6	≤60	76	136	FCCA3DL277#H136#3##1E3
	300*	29	41	51	58	1 600	2,5	4,7	≤60	76	120	FCCA3DL307#H120#3##2E3
	300	34	48	59	68	3 600	2,0	4,3	≤60	76	155	FCCA3DL307#H155#3##2E3
	300*	32	46	56	65	1 600	1,7	5,6	≤50	86	95	FCCA3DL307#L095#3##2E3
	320	30	41	51	58	3 840	2,4	4,8	≤60	86	120	FCCA3DL327#L120#3##1E3
	350*	27	39	48	56	1 650	3,0	4,3	≤60	76	155	FCCA3DL357#H155#3##2E3
	350	32	46	56	64	4 200	2,3	4,2	≤60	76	175	FCCA3DL357#H175#3##2E3

*≤100 FIT Failure Rate

(1) Maximum permissible peak current, (2) Thermal resistance from hotspot to ambient (free convection)

U_R ≤85°C (V_{DC})	C_R (µF)	I_{max} 70°C, 1kHz (A)	I_{max} 60°C, 1kHz (A)	I_{max} 50°C, 1kHz (A)	I_{max} ≤40°C, 1kHz (A)	Î (1) (A)	ESR_{typ} 20°C, 1kHz (mΩ)	R_{th} (2) (K/W)	L_S 20°C (nH)	D ±1,0 (mm)	H ±1,0 (mm)	ORDER CODE "#" to be defined, see ordering code table
1100 A3	400*	42	60	70	70	3 100	1,3	4,3	≤60	76	155	FCCA3DL407#H155#3##2E3
		31	45	55	63	3 100	2,1	4,8	≤60	86	120	FCCA3DL407#L120#3##2E3
	420	30	43	52	60	5 040	2,4	4,6	≤60	86	136	FCCA3DL427#L136#3##1E3
		40	57	70	81	5 040	1,4	4,4	≤50	86	155	FCCA3DL427#L155#3##2E3
	430*	30	43	52	60	3 250	2,4	4,6	≤60	86	136	FCCA3DL437#L136#3##2E3
	440*	41	58	70	70	3 280	1,4	4,2	≤60	76	175	FCCA3DL447#H175#3##2E3
	450	37	53	65	75	5 400	1,3	5,4	≤50	116	95	FCCA3DL457#P095#5##1E3
	480	35	50	62	71	5 760	1,8	4,3	≤60	86	175	FCCA3DL487#L175#3##2E3
	500*	43	62	70	70	3 940	1,2	4,4	≤60	86	155	FCCA3DL507#L155#3##2E3
	580*	44	62	70	70	3 980	1,2	4,3	≤60	86	175	FCCA3DL587#L175#3##2E3
	620	36	52	63	73	6 200	1,5	5,0	≤60	116	120	FCCA3DL627#P120#5##1E3
	650	37	53	65	75	6 500	1,8	4,0	≤60	86	225	FCCA3DL657#L225#3##2E3
	690	34	49	60	69	6 900	1,7	4,9	≤60	116	136	FCCA3DL697#P136#5##1E3
	770	47	66	81	93	7 700	1,0	4,6	≤60	116	155	FCCA3DL777#P155#5##2E3
	910	47	67	82	94	9 100	1,0	4,5	≤60	116	175	FCCA3DL917#P175#5##2E3
	1 200	55	79	96	100	9 600	1,2	2,7	≤60	116	230	FCCA3DL128#P230#5##2E3
		66	94	100	100	9 600	0,9	2,5	≤80	136	175	FCCA3DL128#T175#5##2E3
	1 700	58	83	100	100	13 600	1,0	2,9	≤80	136	230	FCCA3DL178#T230#5##2E3
	1 900	67	95	100	100	15 200	1,1	2,0	≤80	136	252	FCCA3DL198#T252#5##2E3
	2 000	59	84	100	100	16 000	1,3	2,2	≤80	116	345	FCCA3DL208#P345#5##3E3
	2 900	74	100	100	100	23 200	1,0	1,8	≤80	136	345	FCCA3DL298#T345#5##3E3
1200 3B	140	26	36	44	51	1 680	3,0	5,1	≤50	76	95	FCC3BDL147#H095#3##1E3
	180*	31	43	53	61	1 520	2,1	5,1	≤60	76	95	FCC3BDL187#H095#3##2E3
	190	29	41	51	58	2 280	2,1	5,6	≤50	86	95	FCC3BDL197#L095#3##1E3
	200	25	35	43	50	2 400	3,4	4,7	≤50	76	120	FCC3BDL207#H120#3##1E3
	220	24	34	42	48	2 640	3,7	4,6	≤60	76	136	FCC3BDL227#H136#3##1E3
	240	32	46	56	65	2 880	2,2	4,3	≤60	76	155	FCC3BDL247#H155#3##2E3
	250*	27	39	48	55	1 980	2,8	4,7	≤60	76	120	FCC3BDL257#H120#3##2E3
		31	45	55	63	1 980	1,8	5,6	≤50	86	95	FCC3BDL257#L095#3##2E3
	260	27	39	48	55	3 120	2,7	4,8	≤60	86	120	FCC3BDL267#L120#3##1E3
	280	30	44	53	62	3 360	2,5	4,2	≤60	76	175	FCC3BDL287#H175#3##2E3
	300	28	41	50	58	3 600	2,6	4,6	≤60	86	136	FCC3BDL307#L136#3##1E3
	330*	42	59	70	70	2 130	1,3	4,3	≤60	76	155	FCC3BDL337#H155#3##2E3
	330	35	50	61	71	3 960	1,8	4,4	≤50	86	155	FCC3BDL337#L155#3##2E3
	360	36	51	63	73	4 320	1,4	5,4	≤50	116	95	FCC3BDL367#P095#5##1E3
	370*	41	58	70	70	2 590	1,4	4,2	≤60	76	175	FCC3BDL377#H175#3##2E3
	380*	29	42	51	59	2 600	2,5	4,6	≤60	86	136	FCC3BDL387#L136#3##2E3
	380	35	51	62	72	4 560	1,8	4,3	≤60	86	175	FCC3BDL387#L175#3##2E3
	400*	29	42	51	59	2 800	2,6	4,4	≤60	86	155	FCC3BDL407#L155#3##2E3
	420*	44	62	70	70	3 000	1,2	4,4	≤60	86	155	FCC3BDL427#L155#3##2E3
	480*	42	60	70	70	3 190	1,3	4,3	≤60	86	175	FCC3BDL487#L175#3##2E3
	500	34	49	59	69	5 500	1,7	5,0	≤60	116	120	FCC3BDL507#P120#5##1E3
	540	35	50	61	71	5 940	2,0	4,0	≤60	86	225	FCC3BDL547#L225#3##2E3
	570	32	46	57	66	6 270	1,9	4,9	≤60	116	136	FCC3BDL577#P136#5##1E3
	620	44	63	77	89	6 820	1,1	4,6	≤60	116	155	FCC3BDL627#P155#5##2E3
	720	43	60	74	86	7 920	1,2	4,5	≤60	116	175	FCC3BDL727#P175#5##2E3
	950	53	75	92	100	9 500	1,3	2,7	≤60	116	230	FCC3BDL957#P230#5##2E3
	1 000	63	89	100	100	10 000	1,0	2,5	≤80	136	175	FCC3BDL108#T175#5##2E3
	1 400	55	79	97	100	14 000	1,1	2,9	≤80	136	230	FCC3BDL148#T230#5##2E3
	1 600	67	95	100	100	16 000	1,0	2,2	≤80	116	345	FCC3BDL168#P345#5##3E3
		64	91	100	100	16 000	1,2	2,0	≤80	136	252	FCC3BDL168#T252#5##2E3
	2 200	74	100	100	100	23 200	1,0	1,8	≤80	136	345	FCC3BDL228#T345#5##3E3
1300 O3	120	24	34	42	49	1 440	3,3	5,1	≤50	76	95	FCCO3DL127#H095#3##1E3
	160	23	34	42	48	1 920	3,7	4,7	≤60	76	120	FCCO3DL167#H120#3##1E3
		28	39	48	56	1 920	2,3	5,6	≤50	86	95	FCCO3DL167#L095#3##1E3
	180	23	33	40	46	2 160	4,1	4,6	≤60	76	136	FCCO3DL187#H136#3##1E3

*≤100 FIT Failure Rate

(1) Maximum permissible peak current, (2) Thermal resistance from hotspot to ambient (free convection)

U_R ≤85°C (V_{DC})	C_R (µF)	I_{max} 70°C, 1kHz (A)	I_{max} 60°C, 1kHz (A)	I_{max} 50°C, 1kHz (A)	I_{max} ≤40°C, 1kHz (A)	Î (1) (A)	ESR_{typ} 20°C, 1kHz (mΩ)	R_{th} (2) (K/W)	L_S 20°C (nH)	D ±1,0 (mm)	H ±1,0 (mm)	ORDER CODE "#" to be defined, see ordering code table
1300 O3	210	31	44	54	62	2 520	2,4	4,3	≤60	76	155	FCCO3DL217#H155#3##2E3
	220	28	40	49	57	2 640	2,6	4,8	≤60	86	120	FCCO3DL227#L120#3##1E3
	240	29	41	51	58	2 880	2,8	4,2	≤60	76	175	FCCO3DL247#H175#3##2E3
	250	27	39	47	55	3 000	2,9	4,6	≤60	86	136	FCCO3DL257#L136#3##1E3
	280	36	52	63	73	3 360	1,7	4,4	≤50	86	155	FCCO3DL287#L155#3##2E3
	310	34	48	59	68	3 720	1,6	5,4	≤50	116	95	FCCO3DL317#P095#5##1E3
	320	34	49	61	70	3 840	1,9	4,3	≤60	86	175	FCCO3DL327#L175#3##2E3
	420	33	47	58	67	5 040	1,8	5,0	≤60	116	120	FCCO3DL427#P120#5##1E3
	450	33	48	58	67	5 400	2,2	4,0	≤60	86	225	FCCO3DL457#L225#3##2E3
	480	31	44	54	62	5 760	2,1	4,9	≤60	116	136	FCCO3DL487#P136#5##1E3
	530	44	63	77	89	6 360	1,1	4,6	≤60	116	155	FCCO3DL537#P155#5##2E3
	630	45	64	78	90	7 560	1,1	4,5	≤60	116	175	FCCO3DL637#P175#5##2E3
	820	49	70	86	99	9 840	1,5	2,7	≤60	116	230	FCCO3DL827#P230#5##2E3
	880	60	85	100	100	10 560	1,1	2,5	≤80	136	175	FCCO3DL887#T175#5##2E3
	1 200	53	76	93	100	13 200	1,2	2,9	≤80	136	230	FCCO3DL128#T230#5##2E3
	1 300	62	88	100	100	14 300	1,3	2,0	≤80	136	252	FCCO3DL138#T252#5##2E3
	1 400	61	87	100	100	15 400	1,2	2,2	≤80	116	345	FCCO3DL148#P345#5##3E3
	1 900	68	96	100	100	20 900	1,2	1,8	≤80	136	345	FCCO3DL198#T345#5##3E3
1500 C3	110*	27	39	48	55	1 340	2,6	5,1	≤50	76	95	FCCC3DL117#H095#3##2E3
	140*	28	40	49	57	1 360	2,2	5,6	≤50	86	95	FCCC3DL147#L095#3##2E3
	150*	25	36	44	51	1 420	3,3	4,7	≤60	76	120	FCCC3DL157#H120#3##2E3
	160*	24	34	42	48	1 450	4,0	4,3	≤60	76	155	FCCC3DL167#H155#3##2E3
	170	24	35	43	50	2 040	3,3	4,8	≤60	86	120	FCCC3DL177#L120#3##1E3
	180*	38	54	66	70	1 560	1,6	4,3	≤60	76	155	FCCC3DL187#H155#3##2E3
		28	39	48	56	1 560	2,7	4,8	≤60	86	120	FCCC3DL187#L120#3##2E3
	200*	37	53	65	70	2 200	1,7	4,2	≤60	76	175	FCCC3DL207#H175#3##2E3
	210	33	48	58	67	2 520	2,0	4,4	≤60	86	155	FCCC3DL217#L155#3##2E3
	220*	26	37	46	53	2 460	3,1	4,6	≤60	86	136	FCCC3DL227#L136#3##2E3
	240*	40	57	70	70	2 590	1,4	4,4	≤60	86	155	FCCC3DL247#L155#3##2E3
	270*	39	56	68	70	3 100	1,5	4,3	≤60	86	175	FCCC3DL277#L175#3##2E3
	310	30	44	53	62	3 720	2,1	5,0	≤60	116	120	FCCC3DL317#P120#5##1E3
	330	31	45	55	63	3 960	2,5	4,0	≤60	86	225	FCCC3DL337#L225#3##2E3
	400	39	56	68	79	4 800	1,4	4,6	≤60	116	155	FCCC3DL407#P155#5##2E3
	600	46	66	81	93	7 200	1,7	2,7	≤60	116	230	FCCC3DL607#P230#5##2E3
	1 000	67	95	100	100	12 000	1,0	2,2	≤80	116	345	FCCC3DL108#P345#5##3E3
		70	100	100	100	12 000	1,0	2,0	≤80	136	252	FCCC3DL108#T252#5##2E3
	1 400	74	100	100	100	16 800	1,0	1,8	≤80	136	345	FCCC3DL148#T345#5##3E3
1700 F3	130	24	35	42	49	1 560	3,5	4,8	≤60	86	120	FCCF3DL137#L120#3##1E3
	160	31	44	54	63	1 920	2,3	4,4	≤60	86	155	FCCF3DL167#L155#3##2E3
	240	25	35	43	50	2 880	3,2	5,0	≤60	116	120	FCCF3DL247#P120#5##1E3
	250	29	42	51	59	3 000	2,9	4,0	≤60	86	225	FCCF3DL257#L225#3##2E3
	300	26	38	46	53	3 600	3,0	4,6	≤60	116	155	FCCF3DL307#P155#5##2E3
	460	36	51	62	72	5 520	2,8	2,7	≤60	116	230	FCCF3DL467#P230#5##2E3
	760	44	63	77	89	9 120	2,5	2,0	≤80	136	252	FCCF3DL767#T252#5##2E3
2000 3D	100	23	32	40	46	1 200	4,0	4,8	≤60	86	120	FCC3DDL107#L120#3##1E3
	120	24	34	42	48	1 440	3,8	4,4	≤60	86	155	FCC3DDL127#L155#3##2E3
	190	27	39	48	55	2 280	3,3	4,0	≤60	86	225	FCC3DDL197#L225#3##2E3
	190	27	38	47	54	2 280	2,7	5,0	≤60	116	120	FCC3DDL197#P120#5##1E3
	240	35	49	60	70	2 880	1,8	4,6	≤60	116	155	FCC3DDL247#P155#5##2E3
	370	41	58	71	82	4 440	2,2	2,7	≤60	116	230	FCC3DDL377#P230#5##2E3
	600	61	87	100	100	6 000	1,2	2,2	≤80	116	345	FCC3DDL607#P345#5##3E3
		64	91	100	100	6 000	1,2	2,0	≤80	136	252	FCC3DDL607#T252#5##1E3
	800	71	100	100	100	9 600	1,1	1,8	≤80	136	345	FCC3DDL807#T345#5##3E3
2200 D2	90	24	34	42	48	1 080	3,7	4,6	≤60	86	136	FCCD2DL906#L136#3##1E3
	140	30	43	52	60	1 680	2,2	5,0	≤60	116	120	FCCD2DL147#P120#5##2E3
	150	36	51	63	73	1 800	1,9	4,0	≤60	86	225	FCCD2DL157#L225#3##2E3
	170	29	42	51	59	2 040	2,5	4,6	≤60	116	155	FCCD2DL177#P155#5##2E3

*≤100 FIT Failure Rate

(1) Maximum permissible peak current, (2) Thermal resistance from hotspot to ambient (free convection)

U_R ≤85°C (V_{DC})	C_R (µF)	I_{max} 70°C, 1kHz (A)	I_{max} 60°C, 1kHz (A)	I_{max} 50°C, 1kHz (A)	I_{max} ≤40°C, 1kHz (A)	Î (1) (A)	ESR_{typ} 20°C, 1kHz (mΩ)	R_{th} (2) (K/W)	L_S 20°C (nH)	D ±1,0 (mm)	H ±1,0 (mm)	ORDER CODE "#" to be defined, see ordering code table
2200 D2	210	45	64	78	90	2 520	1,1	4,5	≤60	116	175	FCCD2DL217#P175#5##2E3
	290	51	73	89	100	3 480	1,4	2,7	≤60	116	230	FCCD2DL297#P230#5##2E3
	400	53	76	93	100	4 800	1,2	2,9	≤80	136	230	FCCD2DL407#T230#5##2E3
	450	61	87	100	100	5 400	1,2	2,2	≤80	116	345	FCCD2DL457#P345#5##3E3
	500	62	87	100	100	6 000	1,3	2,0	≤80	136	252	FCCD2DL507#T252#5##2E3
	660	71	100	100	100	7 920	1,1	1,8	≤80	136	345	FCCD2DL667#T345#5##3E3
2600 3E	63	23	33	41	47	756	4,1	4,4	≤60	86	155	FCC3EDL636#L155#3##1E3
	100	32	46	56	65	1 200	2,4	4,0	≤60	86	225	FCC3EDL107#L225#3##1E3
		30,8	44	53	62	1 200	2,1	5,0	≤60	116	120	FCC3EDL107#P120#5##2E3
	120	28	40	49	57	1 440	2,7	4,6	≤60	116	155	FCC3EDL127#P155#5##2E3
	140	43	61	75	86	1 680	1,2	4,5	≤60	116	175	FCC3EDL147#P175#5##2E3
	200	49	70	86	99	2 400	1,5	2,7	≤60	116	230	FCC3EDL207#P230#5##1E3
		60	85	100	100	2 400	1,1	2,5	≤80	136	175	FCC3EDL207#T175#5##2E3
	280	51	73	89	100	3 360	1,3	2,9	≤80	136	230	FCC3EDL287#T230#5##2E3
	320	56	81	99	100	3 840	1,4	2,2	≤80	116	345	FCC3EDL327#P345#5##3E3
	340	59	85	100	100	4 080	1,4	2,0	≤80	136	252	FCC3EDL347#T252#5##2E3
	450	65	92	100	100	5 400	1,3	1,8	≤80	136	345	FCC3EDL457#T345#5##3E3
2800 L3	86	28	40	49	57	1 032	2,5	5,0	≤60	116	120	FCCL3DL866#P120#5##1E3
	88	33	48	58	67	1 056	2,2	4,0	≤60	86	225	FCCL3DL886#L225#3##1E3
	100	26	38	46	53	1 200	2,9	4,9	≤60	116	136	FCCL3DL107#P136#5##1E3
	120	33	46	56	65	1 440	2,1	4,5	≤60	116	175	FCCL3DL127#P175#5##2E3
	170	51	73	89	100	2 040	1,5	2,5	≤80	136	175	FCCL3DL177#T175#5##2E3
	240	49	70	87	100	2 880	1,4	2,9	≤80	136	230	FCCL3DL247#T230#5##2E3
	270	56	81	99	100	3 240	1,4	2,2	≤80	116	345	FCCL3DL277#P345#5##3E3
	290	55	79	97	100	3 480	1,6	2,0	≤80	136	252	FCCL3DL297#T252#5##2E3
	390	68	92	100	100	4 680	1,2	1,8	≤80	136	345	FCCL3DL397#T345#5##3E3
3000 3F	46	21	31	38	43	552	4,6	4,6	≤60	86	136	FCC3FDL466#L136#3##1E3
	74	23	33	41	47	888	3,5	5,0	≤60	116	120	FCC3FDL746#P120#5##1E3
	75	32	47	57	66	900	2,3	4,0	≤60	86	225	FCC3FDL756#L225#3##1E3
	100	41	58	72	83	1 200	1,3	4,5	≤60	116	175	FCC3FDL107#P175#5##2E3
	140	50	71	87	100	1 680	1,6	2,5	≤80	136	175	FCC3FDL147#T175#5##2E3
	200	49	70	86	99	2 400	1,4	2,9	≤80	136	230	FCC3FDL207#T230#5##2E3
	240	64	91	100	100	2 880	1,1	2,2	≤80	116	345	FCC3FDL247#P345#5##3E3
	250	64	91	100	100	3 000	1,2	2,0	≤80	136	252	FCC3FDL257#T252#5##2E3
	330	74	100	100	100	3 960	1,0	1,8	≤80	136	345	FCC3FDL337#T345#5##3E3
3200 3U	64	30	41	50	58	768	2,4	5,0	≤60	116	120	FCC3UDL646#P120#5##1E3
	65	22	32	39	45	780	4,9	4,0	≤60	86	225	FCC3UDL656#L225#3##1E3
	92	41	58	72	83	1 104	1,3	4,5	≤60	116	175	FCC3UDL926#P175#5##2E3
	120	48	69	84	97	1 440	1,7	2,5	≤80	136	175	FCC3UDL127#T175#5##2E3
	180	49	70	86	99	2 160	1,4	2,9	≤80	136	230	FCC3UDL187#T230#5##2E3
	210	59	83	100	100	2 520	1,3	2,2	≤80	116	345	FCC3UDL217#P345#5##3E3
	220	59	85	100	100	2 640	1,4	2,0	≤80	136	252	FCC3UDL227#T252#5##2E3
	300	68	96	100	100	3 600	1,2	1,8	≤80	136	345	FCC3UDL307#T345#5##3E3
3600 3V	44	29	42	51	59	528	2,3	5,0	≤60	116	120	FCC3VDL446#P120#5##1E3
	45	35	50	61	71	540	2,0	4,0	≤60	86	225	FCC3VDL456#L225#3##1E3
	88	51	73	89	100	1 056	1,4	2,7	≤60	116	230	FCC3VDL886#P230#5##2E3
	120	51	73	89	100	1 440	1,3	2,9	≤80	136	230	FCC3VDL127#T230#5##2E3
	160	61	86	100	100	1 920	1,2	2,2	≤80	116	345	FCC3VDL167#P345#5##3E3
	170	62	88	100	100	2 040	1,3	2,0	≤80	136	252	FCC3VDL177#T252#5##2E3
	230	74	100	100	100	2 760	1,0	1,8	≤80	136	345	FCC3VDL237#T345#5##3E3

*≤100 FIT Failure Rate

(1) Maximum permissible peak current, (2) Thermal resistance from hotspot to ambient (free convection)

DC LINK OVERVIEW

DC-LINK

APPLICATIONS:

1. High power frequency converters
2. Motion control, welding equipment, elevators
3. Electric and hybrid electric vehicles
4. Photovoltaic and wind inverters
5. Industry high-end power supplies

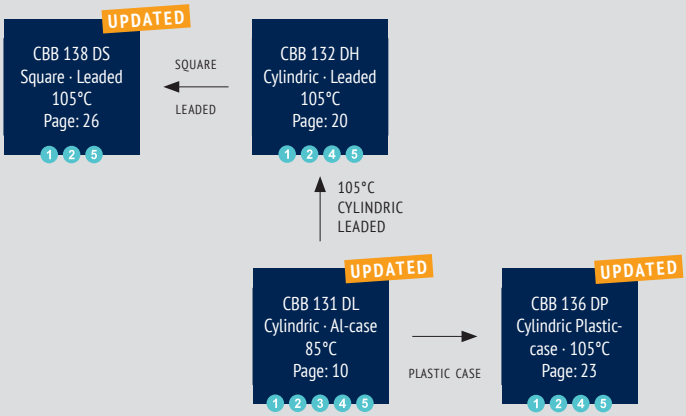

WARRANTY The information contained in this datasheet does neither form part of any quotation nor of a contract, it is believed to be accurate, reliable and up to date. Quality data are based on the statistical evaluations of a large quantity of parts and do not constitute a guarantee in a legal sense. However, agreement on these specifications does mean that the customer may claim for replacement of individual defective capacitors within the terms of delivery. We cannot assume any liability beyond the replacement of defective components. This applies in particular to any further consequences of component failure. Furthermore it must be taken into consideration that the figures stated for lifetime and failure rates refer to the average production status and are therefore to be understood as mean values (statistical expectations) for a large number of delivery lots of identical capacitors. These figures are based on application experience and data obtained from preceding tests under normal conditions, or – for purpose of accelerated aging – more severe conditions. JIANGHAI reserves the right to change these specifications without prior notice. Any application information given is advisory and does not form part of any specification. The products are not primarily designed for use in life supporting applications, devices or systems where malfunction of these products can reasonably be expected to result in personal injury. JIANGHAI customers using or selling these products for use in such applications without prior written consent of JIANGHAI do so at their own risk and agree fully to indemnify JIANGHAI for any damage resulting from such improper use or sale. This version of the datasheet supersedes all previous versions.

NOMINAL CAPACITANCE C_R Nominal Capacitance is defined at 20°C and 50Hz (120Hz).

RATED VOLTAGE U_R

DC and Snubber Capacitors:

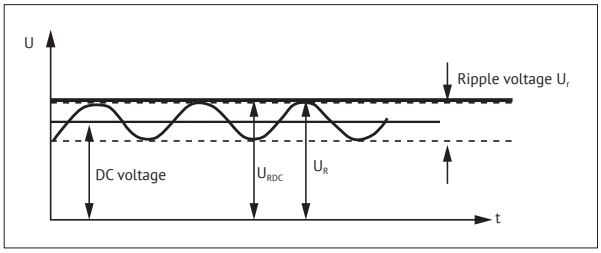

U_{RDC} Maximum operating peak voltage of either polarity but of a non-reversing type waveform, for which the capacitor has been designed, for continuous operation. The maximum DC voltage is the sum of the DC voltage and peak AC voltage. The peak voltage shall not exceed the rated voltage U_{RDC}.In case any AC Voltage U_{RAC} is specified, it is defined as max peak voltage of a repetitive AC voltage.

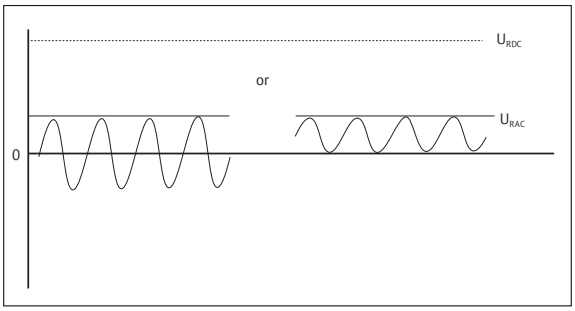

AC Capacitors:

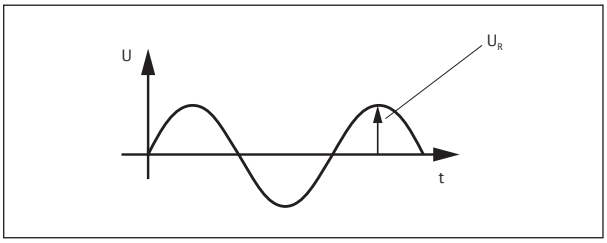

U_{RAC} Maximum operating peak recurrent voltage of either polarity of a reversing type waveform for which the capacitor has been designed.

PEAK-TO-PEAK RIPPLE VOLTAGE U_r (DC Capacitor, Snubber Capacitors) shall not exceed $U_r \leqslant 0{,}3 * U_{RDC}$.

OPERATING VOLTAGE The plastic film capacitor varies in the maximum applicable voltage depending on the applied voltage waveform, current waveform, frequency, ambient temperature (capacitor surface temperature), capacitance value, etc. Be sure to use capacitors within the specified values by checking the voltage waveform, current waveform, and frequency applied to them (In the application of high frequency, the permissible voltage varies with the type of the capacitor. Refer to the specification for details. See also Voltage Derating tables.).

NON-RECURRENT SURGE VOLTAGE U_S Peak voltage induced by a switching or any other disturbance of the system which is allowed for a limited number of times and for durations shorter than the basic period.

- Maximum duration: 50 ms / pulse
- Maximum number of occurrences: 1000 (during load)

MAXIMUM RATE OF VOLTAGE RISE dV/dt Maximum permissible repetitive rate of voltage rise of the operational voltage.

OPERATING CURRENT Due to the fact that the dissipation factor of the capacitor is greater than zero, heat will be generated in any application where alternating currents or pulses occur. The resulting internal temperature rise may cause a severe deterioration of the capacitor's withstanding voltage, or may lead to a breakdown (even smoke or fire may result). Therefore, the safe use of capacitor must be within the rated voltage (or category voltage) and the permissible current ranges. The rated current must be considered by dividing into pulse current (peak current) and continuous current (rms current) depending on the break down mode, and when using, should make sure the both currents are within the permissible range.

MAXIMUM CURRENT I_{MAX} Maximum Rms Current for continuous operation, see Current Derating tables.

MAXIMUM PEAK CURRENT $\hat{I}$ Maximum permissible repetitive peak current which can occur during continuous operation.

$\hat{I} = C_R * (dV/dt)$

MAXIMUM SURGE CURRENT $\hat{I}_S$

- Maximum duration: 50 ms / pulse
- Maximum number of occurrences: 1000 (during load)

SERIES RESISTANCE R_S Effective ohmic resistance of the conducting elements of the capacitor.

EQUIVALENT SERIES RESISTANCE ESR The ESR represents all ohmic resistances: $ESR = \tan\delta/(\omega C) = R_s + \tan\delta_o/(\omega C)$

DIELECTRIC DISSIPATION FACTOR $\tan\delta_0$ Constant dissipation factor of the dielectric material.

LOSS FACTOR $\tan\delta$ The dissipation factor is the ratio between the reactive and effective power.

HOTSPOT TEMPERATURE $\Theta_{HOTSPOT}$ Temperature at the hottest position inside the capacitor. $\Theta_{hotspot} = \Theta_{ambient} + P_{loss} * R_{th}$
R_{th}: thermal resistance, P_{loss}: Powerloss $P_{loss} = ESR * I_{rms}^2$,
$\Theta_{ambient}$ = ambient temperature. The temperature increase due to the powerlosses P_{loss} shall not exceed 15K, if not specified otherwise.

CHARGING AND DISCHARGING Because the charging and discharging current of capacitor is obtained by the product of voltage rise rate (dV/dt) and capacitance, low voltage charging and discharging may also cause deterioration of capacitor such as shorting and open due to sudden charging and discharging current. When charging and discharging, pass through a resistance of 20Ω/V to 1000Ω/V or more to limit the current. When connecting multiple film capacitors in parallel in withstand voltage test or life test, connect a resistance of 20Ω/V to1000Ω/V or more in series to each capacitor. In addition, **capacitors must be discharged via a resistor before handling**. Because the capacitors do not have any discharge resistors built-in, there is a risk of residual voltages and electric energy contents that might be dangerous.

ALTITUDE/m	CURRENT DERATING COEFFICIENT
⩽ 2 000	1,00
2 500	0,95
3 000	0,90
3 500	0,85
4 000	0,80
4 500	0,75
5 000	0,70

TEMPERATURE RANGE AND ALTITUDE Use film capacitors only within the specified operating temperature range. The altitude and barometic pressure have an impact on the functionality of the capacitor. Max. Altitude: 2000m above sea level.

EXPECTED LIFETIME The expected lifetime of the capacitor depends on the applied voltage and the hot spot temperature during operation. For capacitors applied in different situations, the obtainable average service lives are different. Please refer to the life time diagrams of each series.

FAILURE RATE λ (FAILURE IN TIME FIT) 1 FIT = $1/10^{-9}$h (1 failure per 10^9 components test hours), $\lambda = r/(nt)$
r= number of failure, n= test number, t= test time

INSULATION VOLTAGE U_i Rms value of AC voltage designed for the insulation between terminals of the capacitor to case or earth. The insulation voltage is equal to the rated voltage of the capacitor, divided by , unless otherwise specified.

INSULATION RESISTANCE R_i Ration between applied DC Voltage and resulting leakage current after 1 minute of charge. It is defined in MΩ. Typically it is given as time constant R_i*C [μF] in seconds.

VOLTAGE BETWEEN TERMINALS U_{TT} Voltage between terminals.

VOLTAGE BETWEEN TERMINALS AND CASE U_{TC} Voltage between terminals and case.

BUZZING NOISE Any buzzing noise produced by a capacitor is caused by the vibration of the film due to the Coulomb force that is generated between the electrodes with opposite poles. It is of no harm to the capacitor.

DIELECTRICAL ABSORPTION Due to the dielectrical absorption voltages may occure between the terminals. Please discharge the capacitor before usage.

SURFACE OVER TEMPERATURE $\Delta\theta_{case}$ When current continuously flow through the capacitor, the temperature inside the capacitor will rise induced by dissipated heat. If the temperature exceeds the maximum allowed hot-spot temperature, it might cause a short circuit or fire. The limits described in the catalogue must not be exceeded and it's necessary to check the temperature on the capacitor's surface in operation.

FLAME RETARDATION Although flame retarding PU resin or plastic case material is used in the coating or encapsulation of plastic film capacitors, continuous exposure to high temperature ambient or fire will break the coating layer or plastic case of the capacitor, and may lead to melting and ignition of the capacitor element.

HUMID AMBIENT If used for a long time in a humid ambient, the capacitor might absorb humidity and oxidize the electrodes causing damage to the capacitor. In case of AC application, high humidity would increase the corona effect. This phenomenon causes a drop in capacitance and an increase of capacitor losses. Humidity needs to be avoided. If needed please inform Jianghai separately for technical adopted components.

STORAGE CONDITIONS 1) Capacitors must not be stored in corrosive atmospheres, particularly not when chlorides, sulfides, alkali, acids, lye, salts, organic solvents or similar substances are present. 2) It must not be stored in high temperature and/or high humidity environments. The following storage conditions must be kept (applicable only for storage in the original package): Temperature: ⩽ 35 °C; Humidity: ⩽ 80% RH, no dew allowed on the capacitor; Storage time: ⩽ 24 months

MOUNTING Other devices, which are mounted near the capacitor, should not touch the capacitor. Additional heat coming from other components near the capacitor may reduce the lifetime of the capacitor. Do never attempt to bend or twist the capacitor after mounting and avoid any mechanical stress on the terminals. Never exceed the max. permissible torques when tightening the terminal screws or the mounting bolt's cap nuts.

CAUTION & WARNINGS Do not touch the terminals of capacitors. The energy stored in capacitors may be lethal. Ensure that the operating environment of the equipment into which the capacitor has been built, is within the specified conditions. Capacitors must not be used in corrosive atmospheres, particularly not when chlorides, sulfides, alkali, acid, lye, salts, organic solvents or similar substances are present. Electrical or mechanical misapplication may be hazardous. Personal injury or property damage may result from bursting of the capacitors or from expulsion of melted material.

Jianghai Europe E.C. GmbH, v7 0726