Dept / Qty	
DC	1
ED	1
IE	1
ISO	1
PD	1
R&D	1
SD	1
QA	1
QC	1
QE	1

REV.	DESCRIPTION	DRAWN	CHECKED	APPROVED
A	NEW RELEASE	JLZ 01/14/22'		

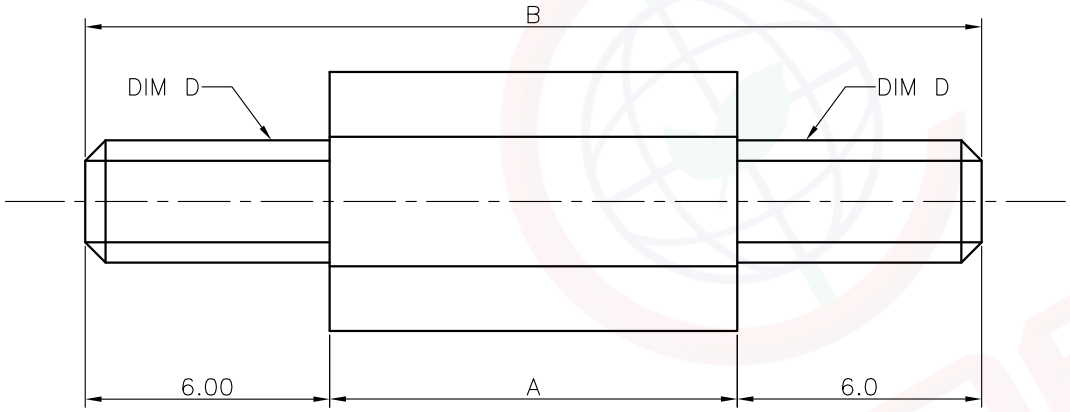

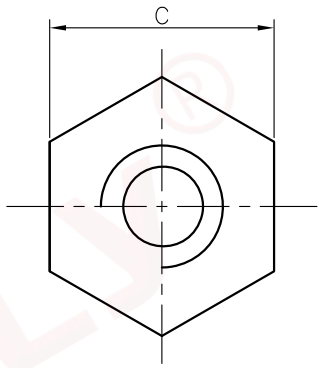

NOTES:

1.Materials: Copper alloy.
2:Plating: Natural.
3:Part number code:

H–LXXXX–XXXX–5–XX–2W–X

- Plating type
  9: Natural
- Thread type: DIM D
  03: M3.0 04: M4.0
- DIM C:
  5: 5.5mm
- DIM B:
  1800: 18.0mm
  .....
  5200: 52.0mm
- DIM A:
  0600: 6.0mm
  .....
  4000: 40.0mm

GENERAL TOLERANCE		ANGLE TOLERANCE	
X.	±0.60	X.	±5°
.X	±0.38	.X	±3°
.XX	±0.25	.XX	±2°

DRAWING TYPE	CUSTOMER		
SCALE	1:1	SHEET	1 OF 1
DRAWING NO.	H-LXXXX-XXXX-5-X-2W-9-A		

PROJECTION		TITLE	Screws
UNITS	mm		
SHEET SIZE	A4	SERIES	Hardwares SERIES

晨翔电子有限公司
CONNFLY CONNFLY ELECTRONIC CO. LTD

The information provided herein is from CONNFLY Electronic Co., Ltd. and is confidential. Any disclosure to a party other than the recipient is prohibited. The intellectual properties and its rights contained herein, including but not limited to, trademarks, patents, copyrights, trade secrets, and technical know-how, are owned exclusively by CONNFLY or its affiliates. Unauthorized use or modification is strictly prohibited without prior written consent from CONNFLY. All intellectual properties provided herein are for reference purposes only and does not constitute authorization of its use in any format or manner. CONNFLY may enforce its intellectual property rights at its own discretion; failures or delays to exercise such rights does not constitute a waiver of such rights.