# Size 16B High construction metal upper shell, ejection wire, 2 pairs of galvanized handles

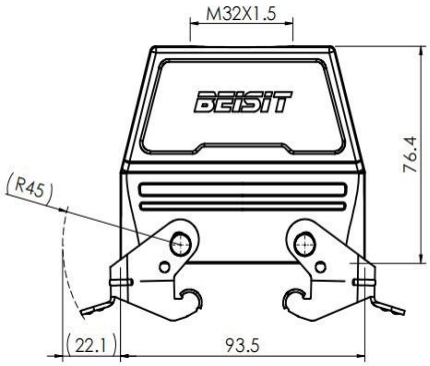


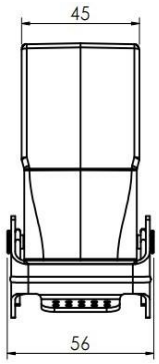


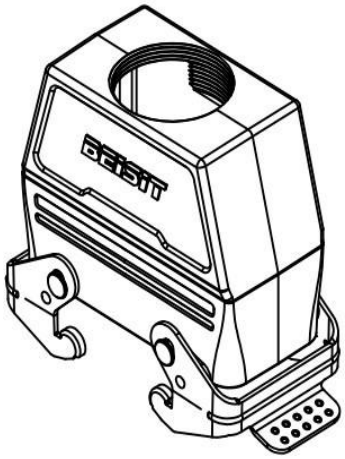

**Model B16B-TOH-2L-M32**

**Item No. 1 007 01 0001557**

## Technical data

| **Product attributes** | |
|---|---|
| Series | Size 16B |
| Applicable to | HE-016, HEE-032, HDD-040, |
| | HDD-072, HK-004/0, HSB-006 |
| classification | upper housing |
| Direction of outlet | ejecting line |
| outlet hole | M32 x 1.5, 1 |
| locking mode | Double catch |
| Protection rating | IP65 |
| Impact strength | IK08 |
| Operating temperature | -40 ℃…125 ℃ |
| Compliance with criteria | DIN EN 175301-801 |

| **Material** | |
|---|---|
| shell | Die-cast aluminum |
| Shell Color | Gray (RAL 7037) |
| catch | Iron galvanizing |

| **Business data** | |
|---|---|
| Weight | 382 g |
| Packaging Unit | 1 pcs |
| Place of Origin | CN |

## peculiarity

- Die-cast aluminum integral molding
- Iron galvanized double handle
- Top outlet
- Resistance to salt spray corrosion
- RoHS, UL94-V0 compliant

* The design data listed here are the design data, and the changes related to the products are not explained here. Please contact customer service for uncovered matters. It is the responsibility of the user to verify functionality, compliance with applicable laws and directives, and electrical safety in the particular application.