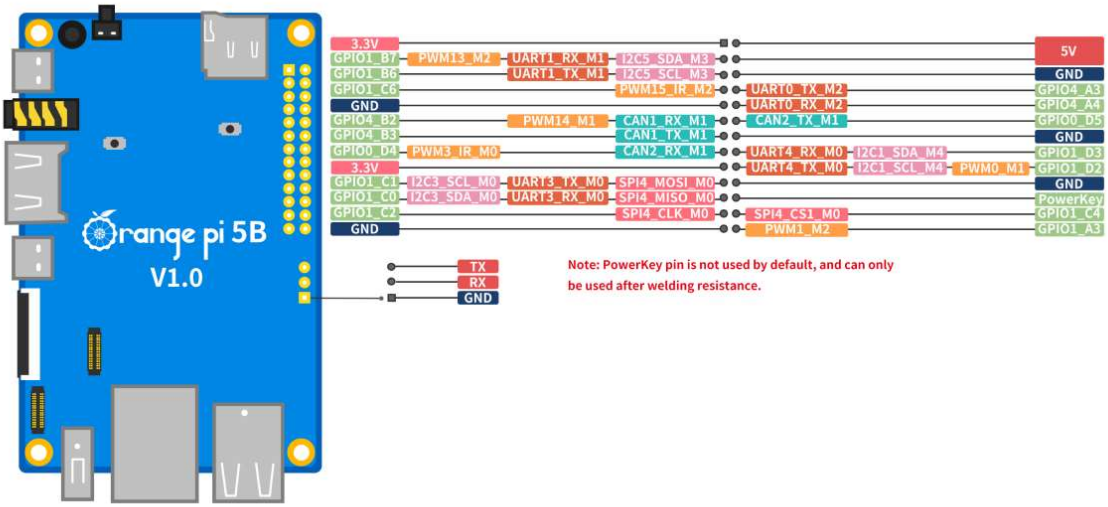

Product parameter

SoC	Rockchip RK3588S (8nm LP process)
CPU	• 8-core 64-bit processor • Big.Little Architecture: 4 * Cortex-A76 and 4 * Cortex-A55, Big core cluster is 2.4GHz, and Little core cluster is 1.8GHz frequency.
GPU	• Arm Mali-G610 MP4 • Compatible with OpenGL ES1.1/2.0/3.2, OpenCL 2.2 and Vulkan 1.2 • 3D graphics engine and 2D graphics engine
NPU	Built-in AI accelerator NPU with up to 6 TOPS, supports INT4/INT8/INT16 mixed operation
PMU	RK806-1
RAM	4GB/8GB/16GB (LPDDR4/4X)
Memory	• 32GB/64GB/128GB/256GB eMMC • MicroSD (TF) Card Slot
USB	USB3.1 * 1 USB2.0 * 2

	Type-C (USB3.1) * 1
Video Output	• HDMI2.1, up to 8K@60Hz • DP1.4 (DisplayPort), maximum output resolution up to 8K@30Hz • 2 * MIPI D-PHY TX 4Lane, configurable up to 4K @60Hz
Camera	• MIPI CSI 4Lane • 2 * MIPI D-PHY RX 4Lane
Audio	CODEC: ES8388 • 3.5mm headphone jack audio input/output • Input: Onboard MIC • HDMI 2.1 eARC
Ethernet	10/100/1000Mbps Ethernet
Expansion Port	For extending UART, PWM, I2C, SPI, CAN and GPIO interfaces
Wi-Fi, BT module	On-board Wi-Fi6+BT 5.3 module, Wi-Fi6 interface: PCIe, BT interface: PCM+UART
Button	1 * MaskROM key 1 * Recovery key 1 * On/Off key
Power Source	Support Type-C power supply, 5V@4A
LED	Power indicator: red Status indicator: green
Debugging	3 Pin debug serial port (UART)
Supported OS	Orangepi OS（Droid）、Orangepi OS（Arch）、Debian11、Ubuntu22.04、Ubuntu20.04、Android12

Appearance specification introduction

Dimension	62mm * 100mm
Weight	52g

Product display

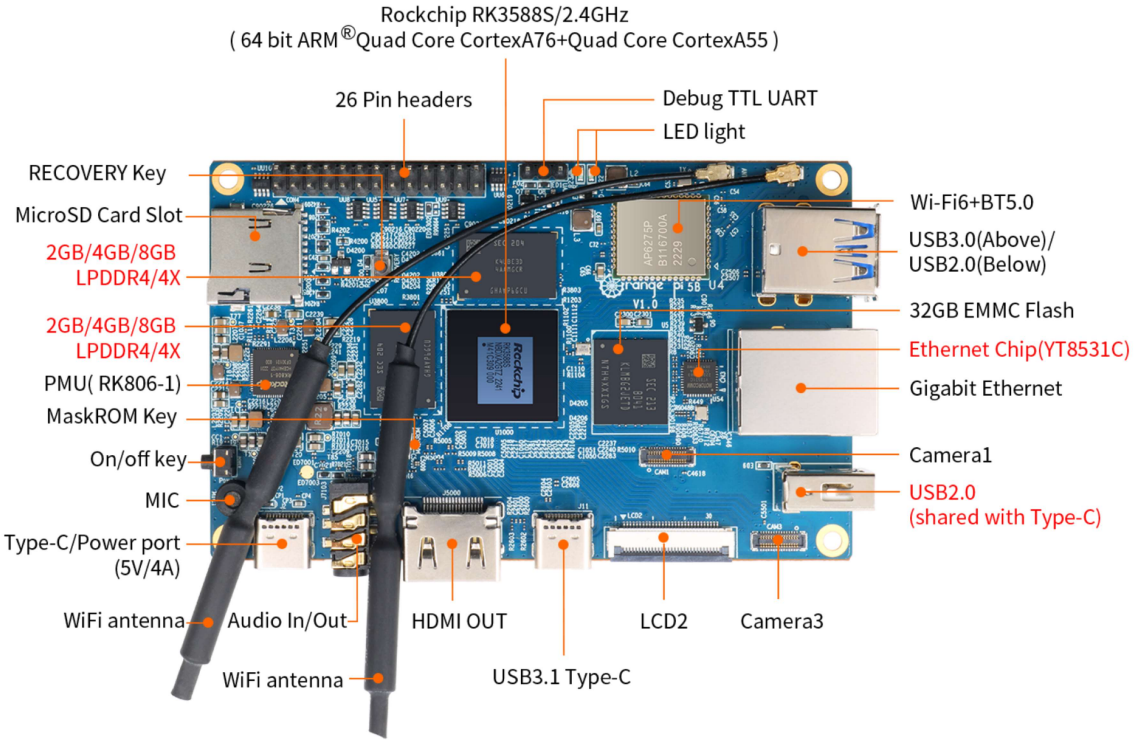

Top View

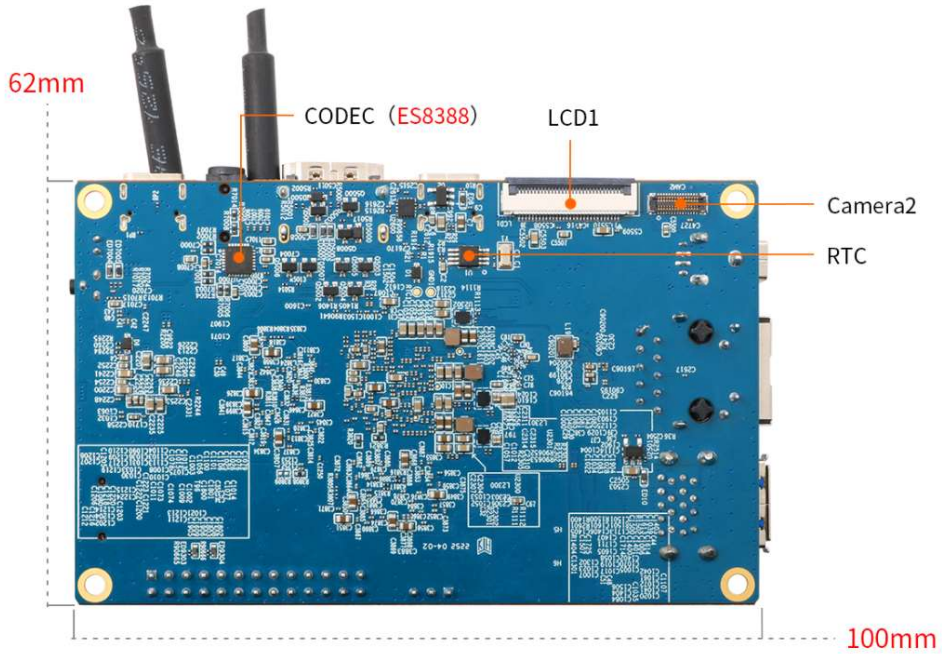

Bottom View

