Top view

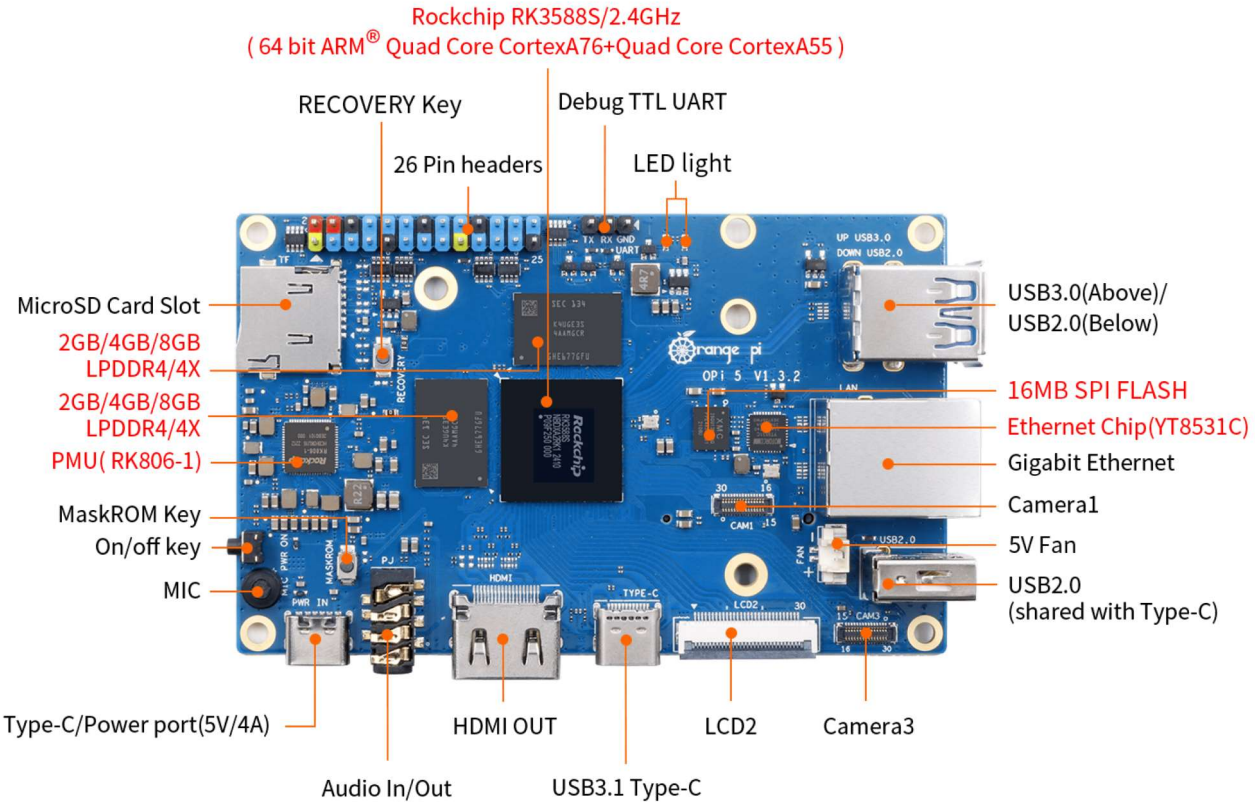
Rockchip RK3588S/2.4GHz
(64 bit ARM® Quad Core CortexA76+Quad Core CortexA55)
RECOVERY Key
Debug TTL UART
26 Pin headers
LED light
MicroSD Card Slot
2GB/4GB/8GB
LPDDR4/4X
2GB/4GB/8GB
LPDDR4/4X
PMU(RK806-1)
MaskROM Key
On/off key
MIC
USB3.0(Above)/
USB2.0(Below)
16MB SPI FLASH
Ethernet Chip(YT8531C)
Gigabit Ethernet
Camera1
5V Fan
USB2.0
(shared with Type-C)
Type-C/Power port(5V/4A)
HDMI OUT
LCD2
Camera3
Audio In/Out
USB3.1 Type-C

Bottom view

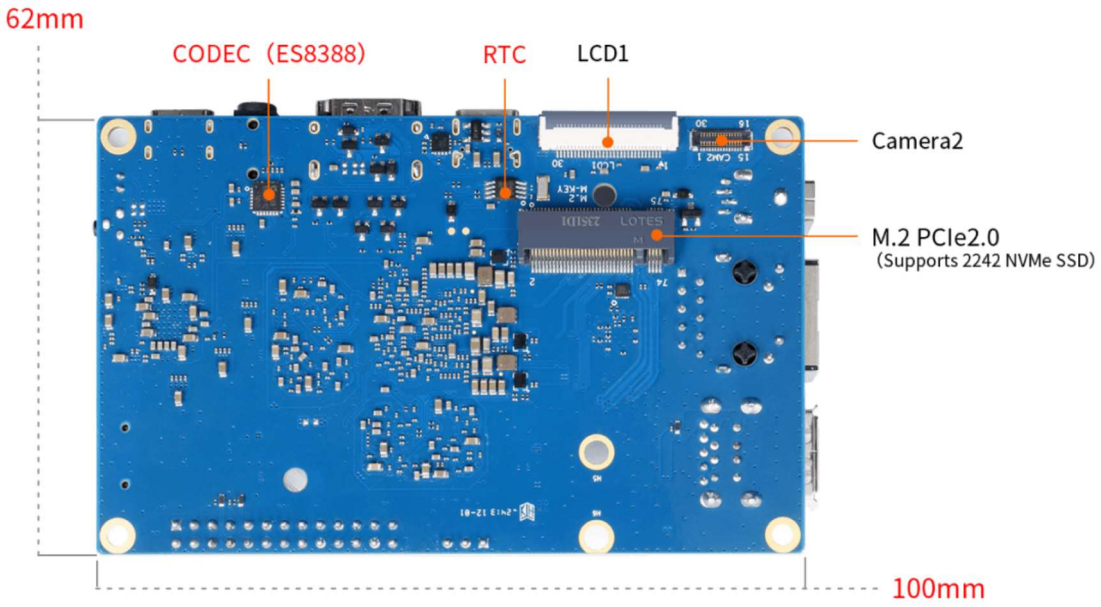

Orange Pi 5 V1.3.2 pin definition

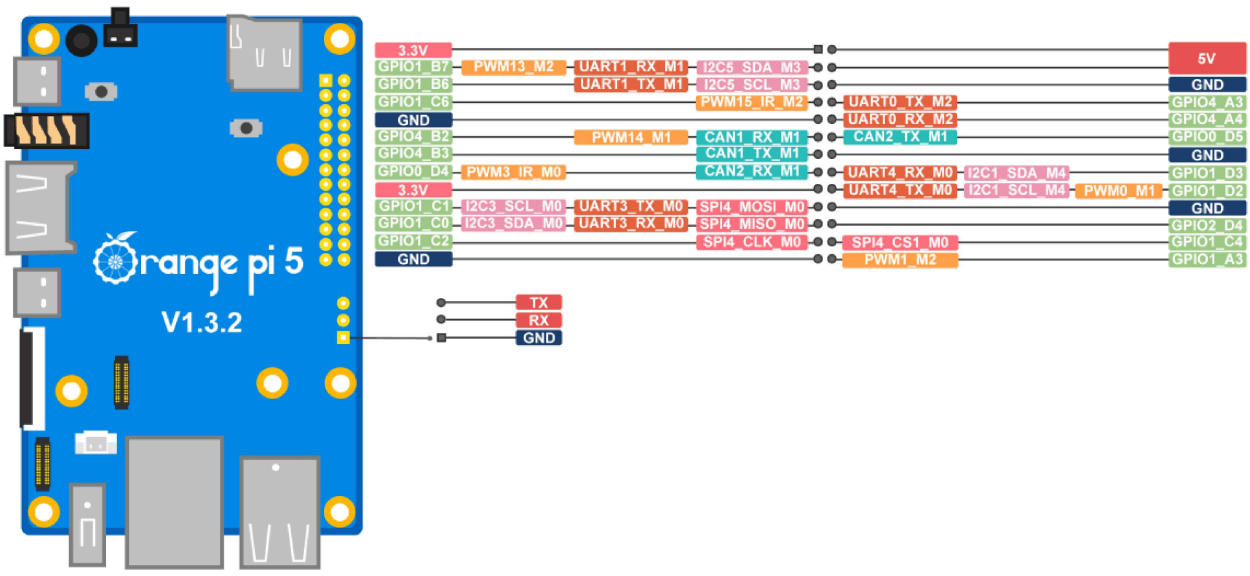

Hardware Specification

SoC	Rockchip RK3588S (8nm LP process)
CPU	• 8-core 64-bit processor • Big.Little Architecture: 4xCortex-A76 and 4xCortex-A55, Big core cluster is 2.4GHz, and Little core cluster is 1.8GHz frequency.
GPU	• Arm Mali-G610 MP4 “Odin” GPU • Compatible with OpenGL ES1.1/2.0/3.2, OpenCL 2.2 and Vulkan 1.2 • 3D graphics engine and 2D graphics engine
NPU	Built-in AI accelerator NPU with up to 6 TOPS, supports INT4/INT8/INT16 mixed operation
PMU	RK806-1
RAM	4GB/8GB/16GB（LPDDR4/4X）
Memory	• QSPI Nor FLASH 16MB • MicroSD (TF) Card Slot • M.2 M-KEY Socket
USB	USB3.0 × 1 USB2.0 × 2 Type-C (USB3.1) ×1
Video Output	• HDMI2.1, up to 8K @60Hz • DP1.4 (DisplayPort), DP1.4 and USB3.1 ports are multiplexed, and the port is shared with Type-C

	• 2 * MIPI D-PHY TX 4Lane, configurable up to 4K @60Hz
Camera	• MIPI CSI 4Lane • 2 * MIPI D-PHY RX 4Lane
Audio	CODEC: ES8388 • 3.5mm headphone jack audio input/output • Input: Onboard MIC • HDMI 2.1 eARC
Ethernet	10/100/1000Mbps Ethernet
Expansion Port	For extending UART, PWM, I2C, SPI, CAN and GPIO interfaces.
M.2 M-KEY Socket Expansion Slot	Support PCIe NVMe SSD Support custom PCIe Wi-Fi6+BT5.0 module
Button	1×MaskROM key 1×Recovery key 1×On/Off key
Power Source	Support Type-C power supply, 5V @ 4A
LED	Power indicator: red Status indicator: green
FAN	5V FAN
Debugging	3 Pin debug serial port (UART)
Supported OS	Orangepi OS（Droid）、Orangepi OS（Arch）、Ubuntu、Debian、Android12

Appearance specification introduction

Dimension	62mm*100mm
Weight	46g

Product display

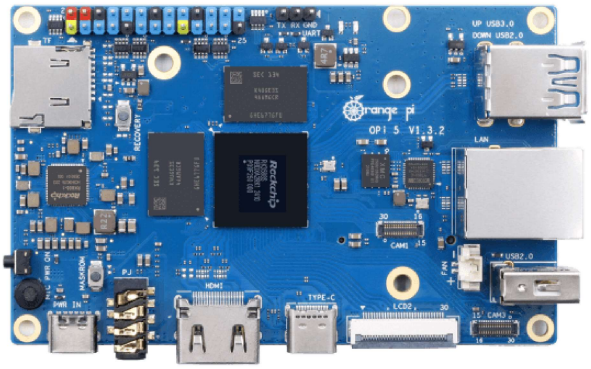

Front

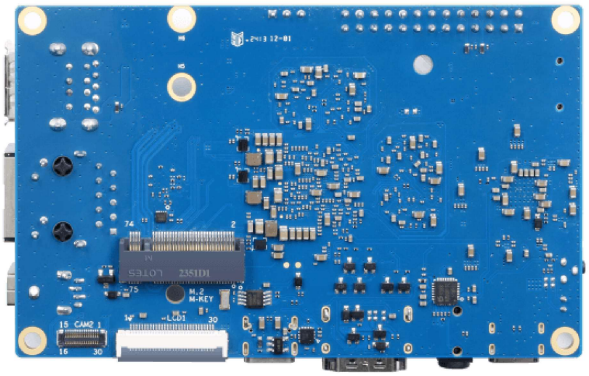

Back



45° angle

